CY8CKIT-005 MiniProg4

CONTENTS

PAGE	DESCRIPTION
01	Title & Table of Contents
02	Block Diagram
03	Voltage Regulator
04	MiniProg4 Controller
05	Level Translators & Protection Circuits
06	Connectors & Protection Circuits
07	Revision History

Drawing Numbers

PCBA	121-60462-01
PCB	600-60462-01
FAB DRW	610-60462-01
ASSY DRW	620-60462-01
SCH DRW	630-60462-01

CYPRESS SEMICONDUCTOR
198 CHAMPION COURT
SAN JOSE, CA 95134
(408) 943-2600

CYPRESS SEMICONDUCTOR © 2020

SCH Title : CY8CKIT-005 MiniProg4

Page Title : Title Page

Size	Document Number	Drawn By	Approved By	Rev
A4	630-60462-01	AARA	RKAD	06

Date: Friday, November 06, 2020 Sheet 1 of 7

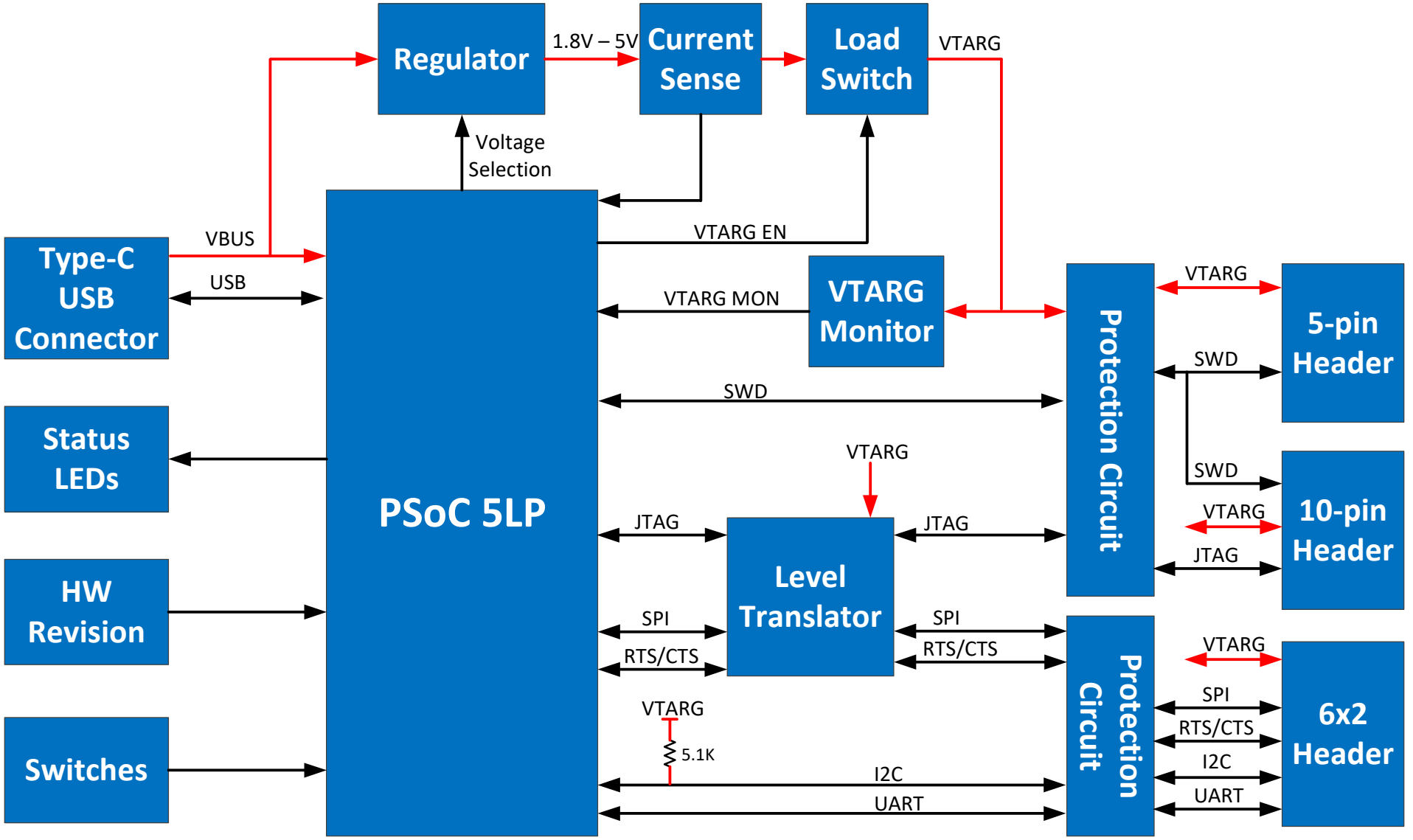

CYPRESS SEMICONDUCTOR
198 CHAMPION COURT
SAN JOSE, CA 95134
(408) 943-2600

CYPRESS SEMICONDUCTOR © 2020

SCH Title : CY8CKIT-005 MiniProg4

Page Title : Block Diagram

Size	Document Number	Drawn By	Approved By	Rev
A4	630-60462-01	AARA	RKAD	06

Date: Friday, November 06, 2020 Sheet 2 of 7

USB Type-C Connector

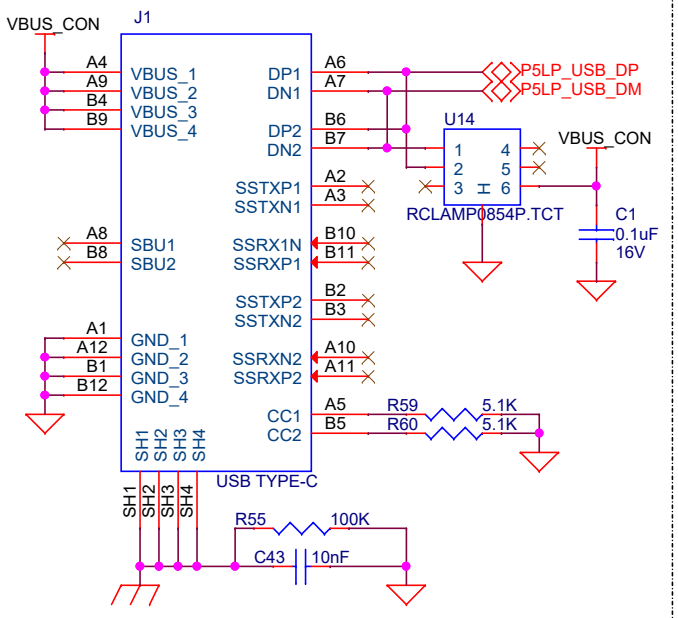

Variable (1.8V - 5V) Regulator

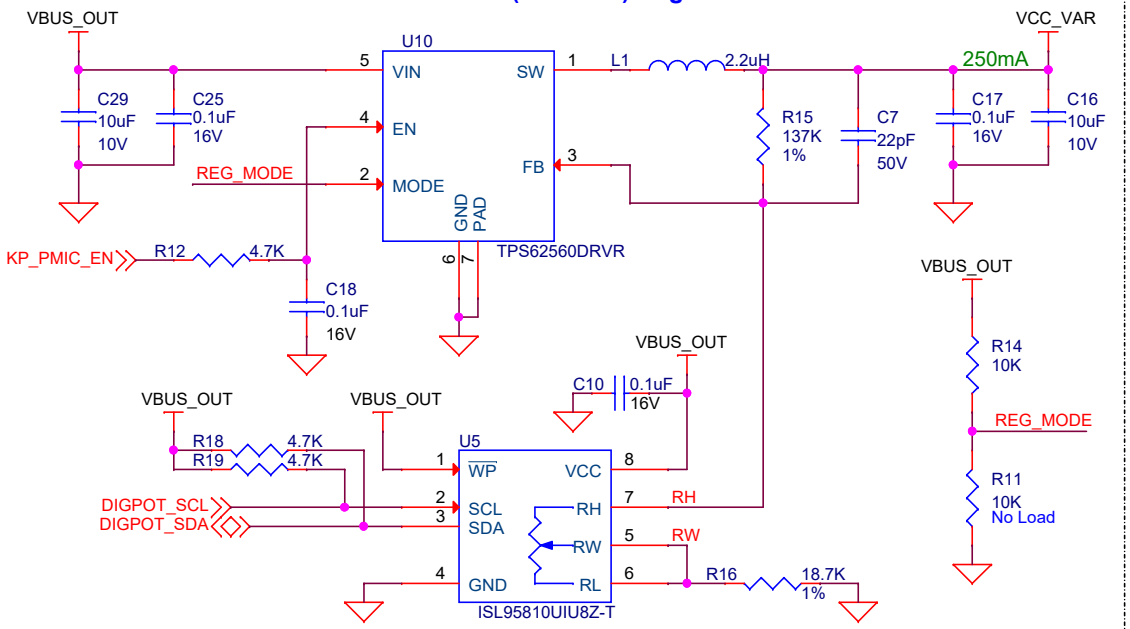

Target Power LED

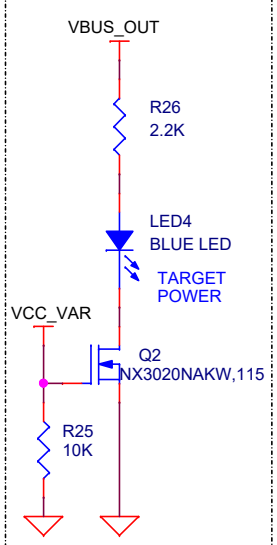

Protection for VBUS

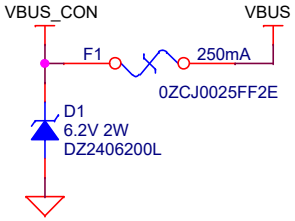

Reverse Protection for VBUS

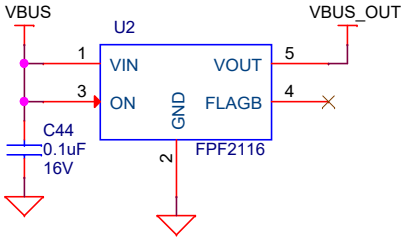

VTARG Enable & Over-Current Protection

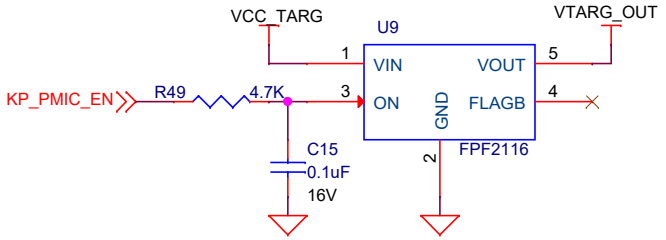

Reverse Protection for Regulator

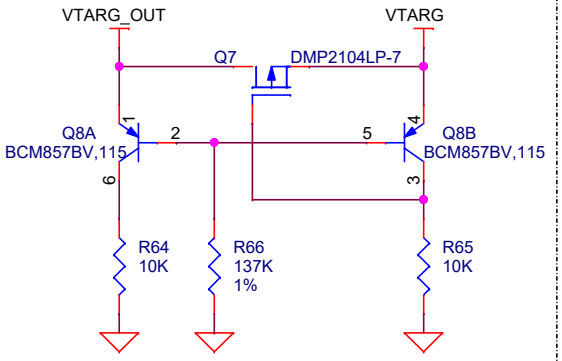

Current Monitoring

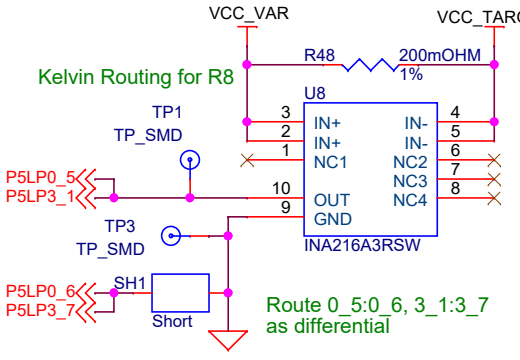

CYPRESS SEMICONDUCTOR
198 CHAMPION COURT
SAN JOSE, CA 95134
(408) 943-2600

CYPRESS SEMICONDUCTOR © 2020

SCH Title : CY8CKIT-005 MiniProg4

Page Title : Power Supply Section

Size	Document Number	Drawn By	Approved By	Rev
A4	630-60462-01	AARA	RKAD	06

Date: Friday, November 06, 2020 Sheet 3 of 7

PSoC 5LP

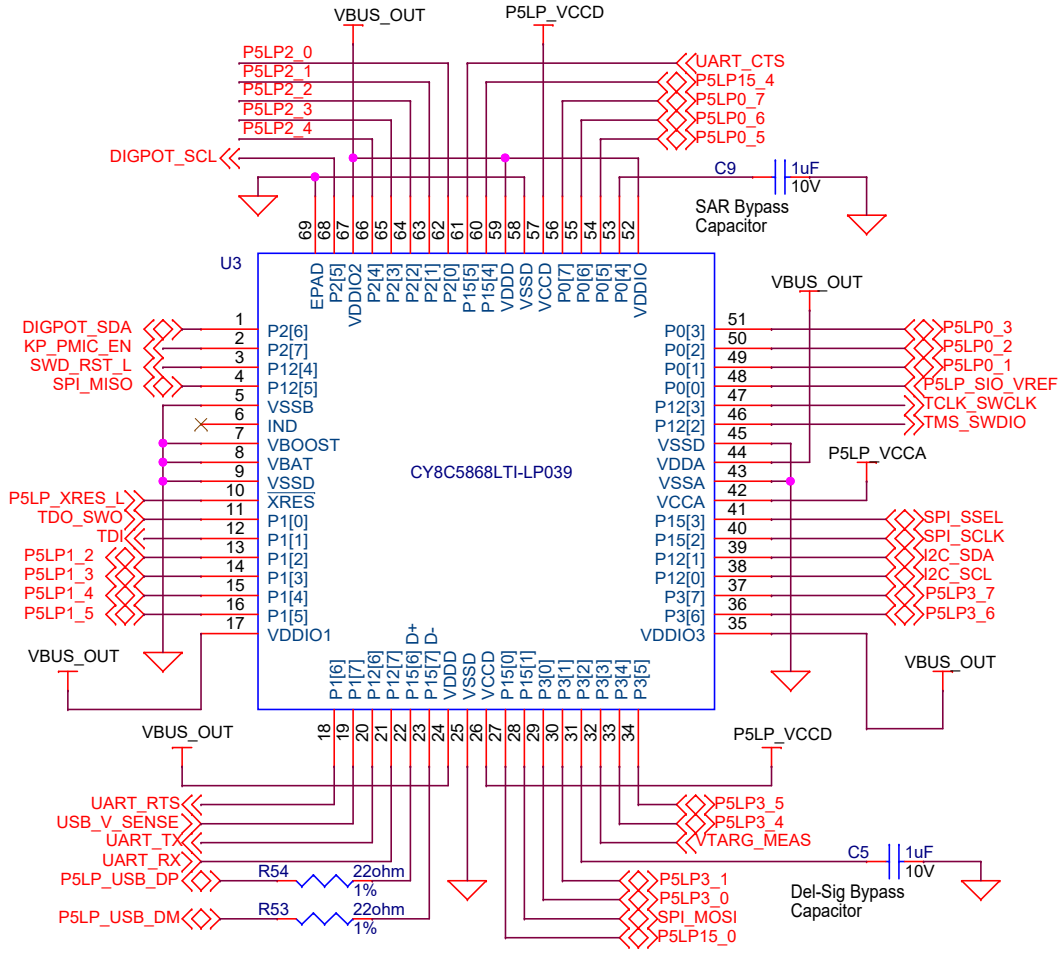

Decoupling Capacitors

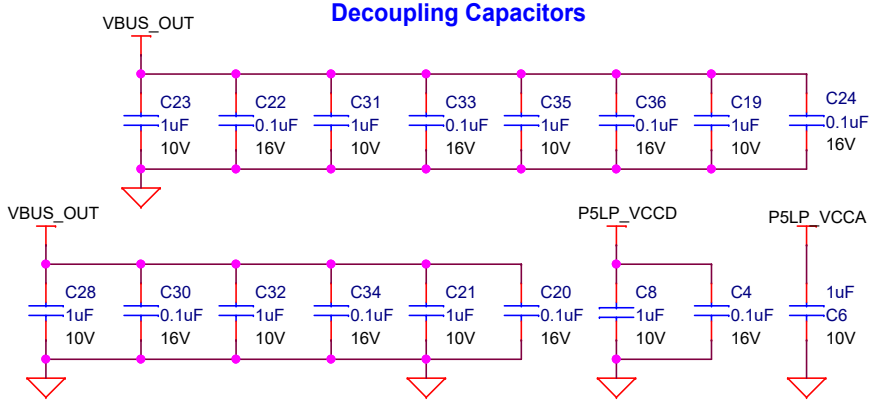

KitProg2 HW Revision

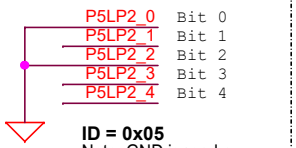

ID = 0x05
Note: GND is read as binary "1" and floating as "0"

Voltage Monitoring

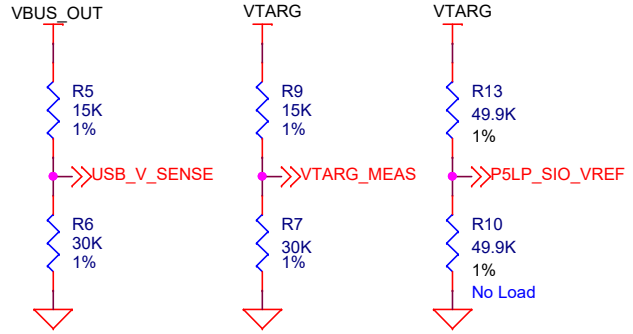

Optional PSoC 5LP SWD Interface

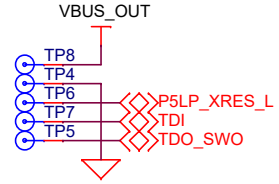

PSoC 5LP Status LEDs

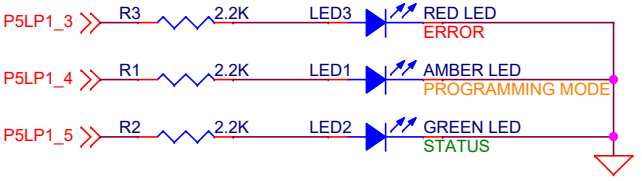

Option for I2C Pull-up on 5-pin Header

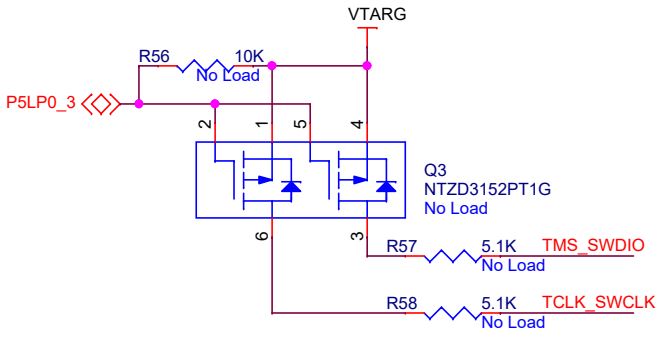

Unused KP2 ports

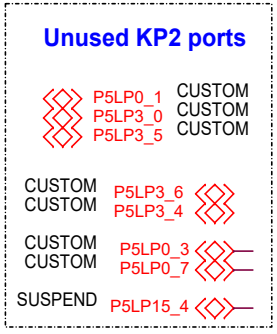

PSoC 5LP User Switches

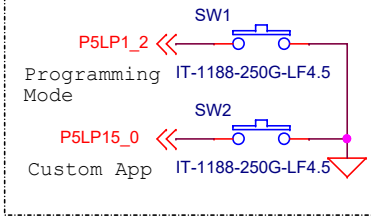

CYPRESS SEMICONDUCTOR
198 CHAMPION COURT
SAN JOSE, CA 95134
(408) 943-2600

CYPRESS SEMICONDUCTOR © 2020

SCH Title : CY8CKIT-005 MiniProg4				
Page Title : MiniProg4 Controller				
Size: A4	Document Number: 630-60462-01	Drawn By: AARA	Approved By: RKAD	Rev: 06
Date: Friday, November 06, 2020		Sheet 4 of 7		

3.3V Regulator

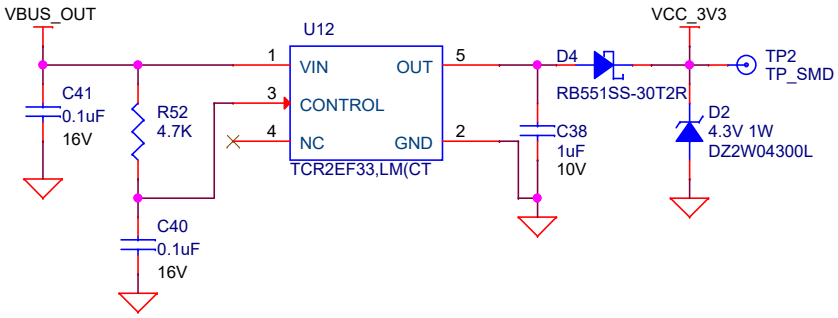

Protection Circuit for VTARG

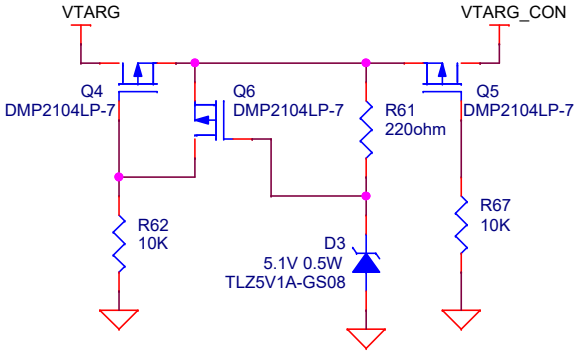

Level Translators for SPI and UART flow control

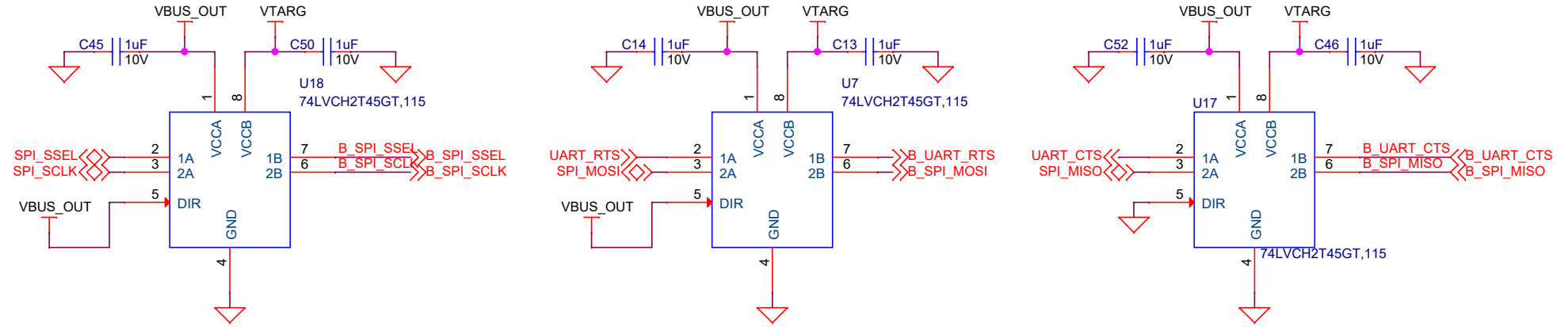

Level Translators for JTAG

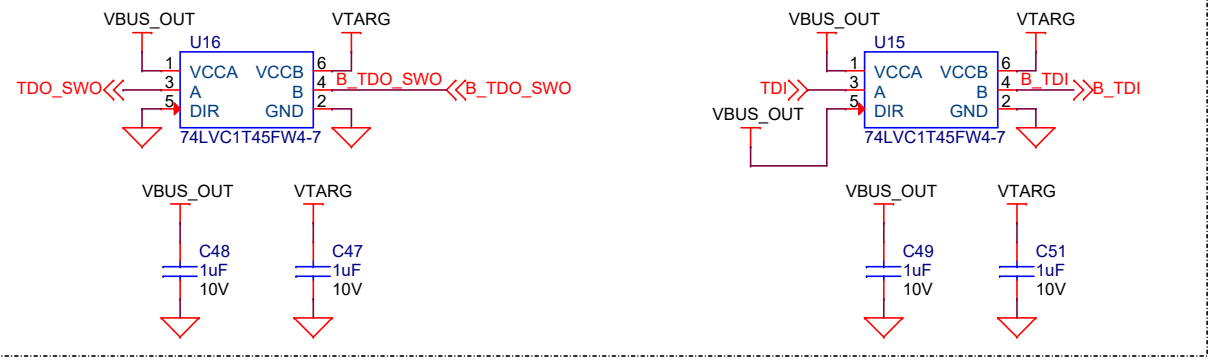

CYPRESS SEMICONDUCTOR
198 CHAMPION COURT
SAN JOSE, CA 95134
(408) 943-2600

CYPRESS SEMICONDUCTOR © 2020

SCH Title : CY8CKIT-005 MiniProg4				
Page Title : Level Translators & Protection Circuits				
Size: A4	Document Number: 630-60462-01	Drawn By: AARA	Approved By: RKAD	Rev: 06
Date: Friday, November 06, 2020		Sheet 5 of 7		

Protection Circuit for Programming Pins

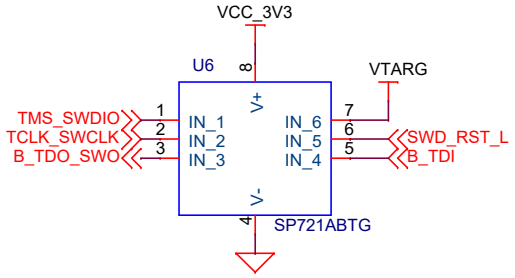

Limiting Resistors for Programming Pins

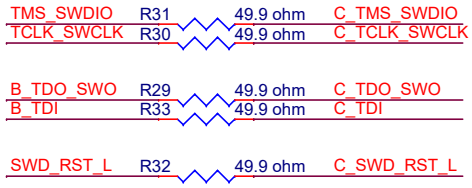

5-Pin SWD Header

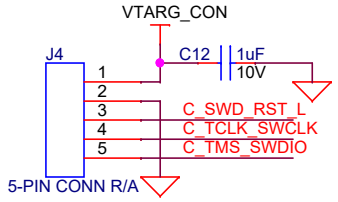

10-Pin JTAG Header

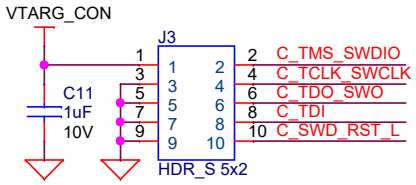

Protection Circuit for Communication Pins

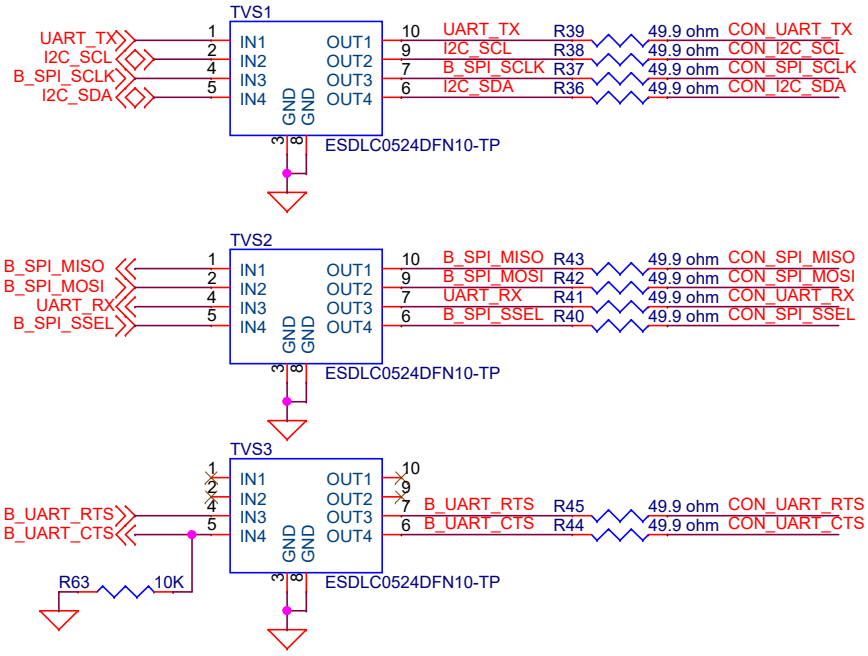

I2C Pull-up

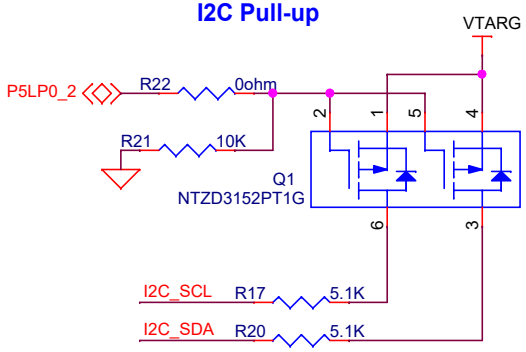

I2C, UART & SPI Header

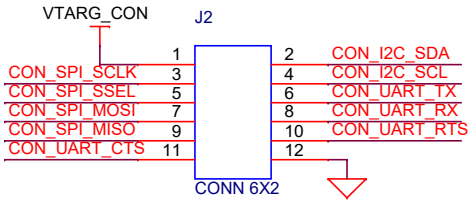

CYPRESS SEMICONDUCTOR
198 CHAMPION COURT
SAN JOSE, CA 95134
(408) 943-2600

CYPRESS SEMICONDUCTOR © 2020

SCH Title : CY8CKIT-005 MiniProg4				
Page Title : Connectors & Protection Circuits				
Size: A4	Document Number: 630-60462-01	Drawn By: AARA	Approved By: RKAD	Rev: 06
Date: Friday, November 06, 2020		Sheet 6 of 7		

REVISION HISTORY

REV	DESCRIPTION OF CHANGE	DATE
01	Internal Release	2017/05/15
02	Initial Proto Release	2017/06/21
03	Internal Release	2017/10/30
04	Internal Release	2017/11/08
05	Initial Release	2018/06/06
06	Update for JTAG functional fix	2020/11/06

CYPRESS SEMICONDUCTOR
198 CHAMPION COURT
SAN JOSE, CA 95134
(408) 943-2600

CYPRESS SEMICONDUCTOR © 2020

SCH Title : CY8CKIT-005 MiniProg4

Page Title : Revision History

Size	Document Number	Drawn By	Approved By	Rev
A4	630-60462-01	AARA	RKAD	06

Date: Friday, November 06, 2020 Sheet 7 of 7