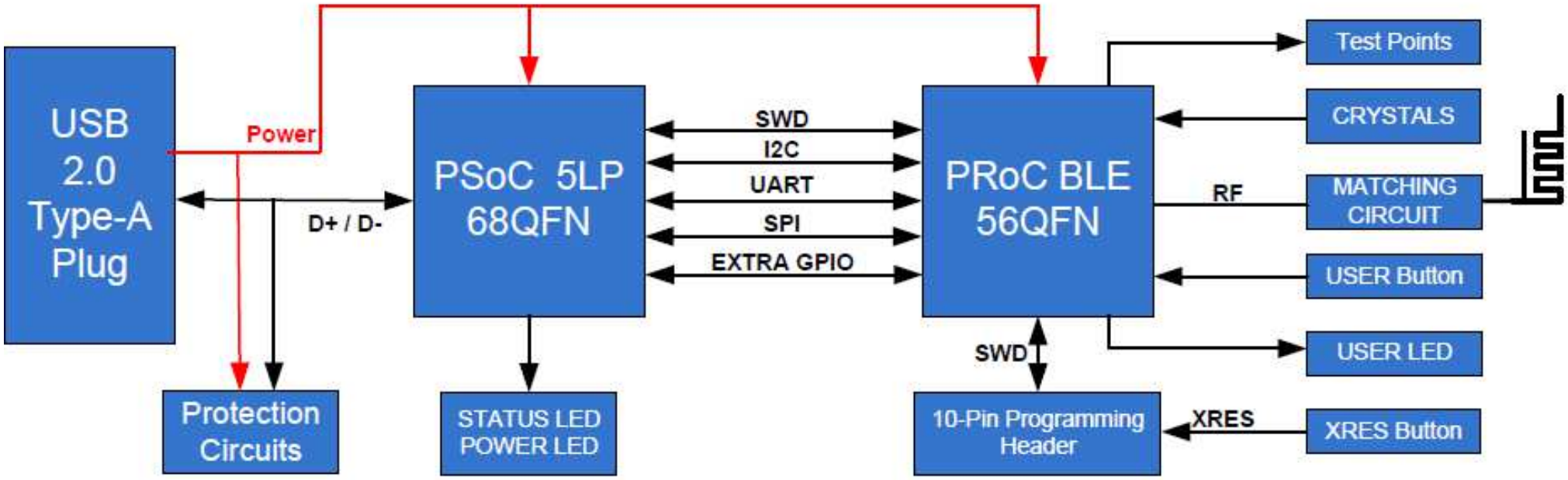

PCA: 121-60161-01
PCB: 600-60197-01
FAB DRW: 610-60189-01
ASSY DRW: 620-60197-01

CYPRESS SEMICONDUCTOR © 2014

Title: BLE Dongle		
Size: A	Document Number: 630-60193-01	Rev: 03
Date: Tuesday, September 30, 2014	Sheet 1 of 3	

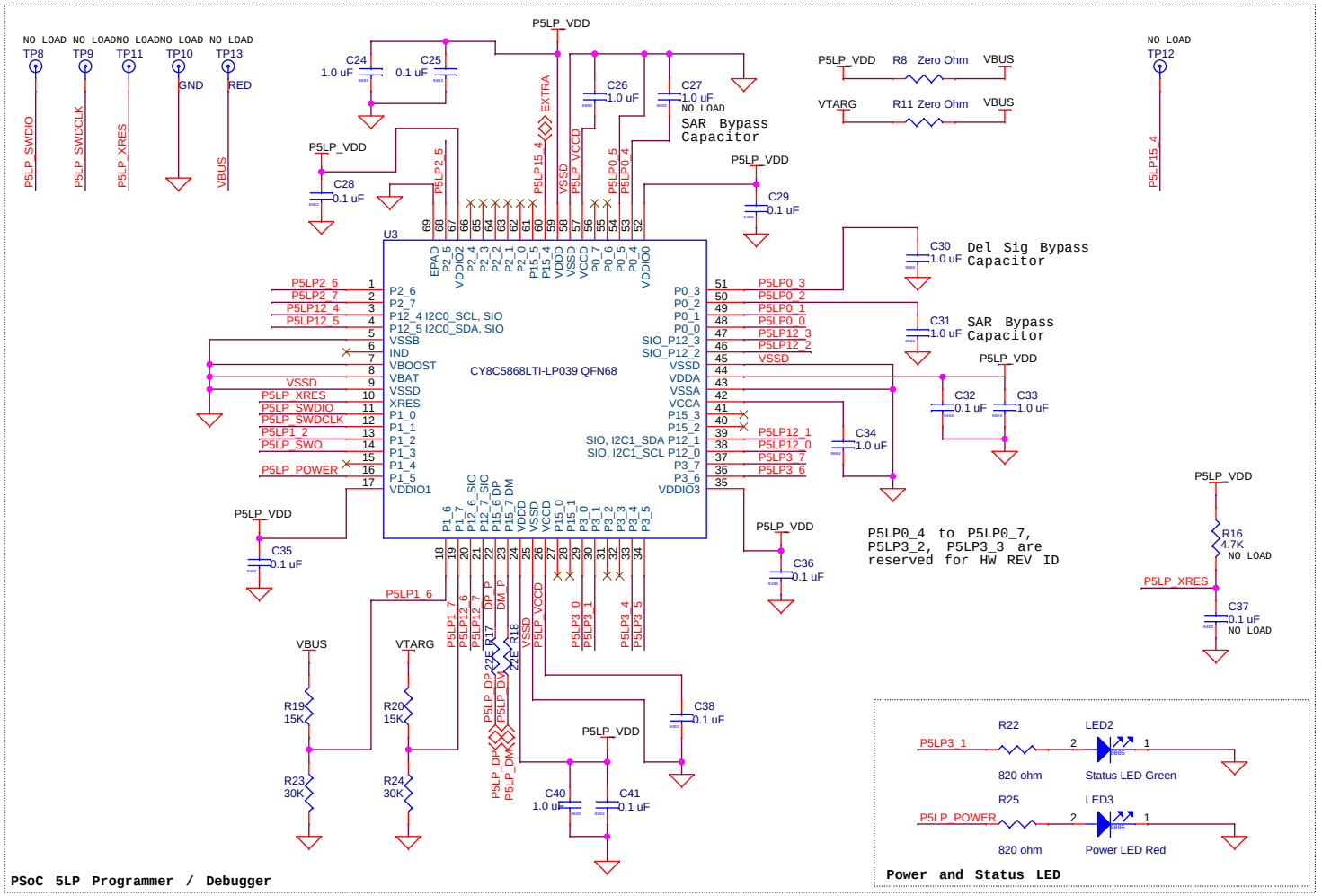
P5LP_VDD
NO LOAD NO LOADNO LOADNO LOAD NO LOAD
TP8 TP9 TP11 TP10 TP13
P5LP_SWDIO
P5LP_SWDCLK
P5LP_XRES
GND
RED
VBUS
C24 1.0 uF
C25 0.1 uF
C26 1.0 uF
C27 1.0 uF NO LOAD
SAR Bypass Capacitor
C28 0.1 uF
C29 0.1 uF
P5LP_VDD R8 Zero Ohm VBUS
VTARG R11 Zero Ohm VBUS
NO LOAD TP12
P5LP15_4
U3
CY8C5868LTI-LP039 QFN68
P5LP2_6
P5LP2_7
P5LP12_4 I2C0_SCL, SIO
P5LP12_5 I2C0_SDA, SIO
P5LP_XRES
P5LP_SWDIO
P5LP_SWDCLK
P5LP1_2
P5LP_SWO
P5LP_POWER
C30 1.0 uF Del Sig Bypass Capacitor
C31 1.0 uF SAR Bypass Capacitor
C32 0.1 uF
C33 1.0 uF
C34 1.0 uF
C35 0.1 uF
C36 0.1 uF
P5LP0_4 to P5LP0_7, P5LP3_2, P5LP3_3 are reserved for HW REV ID
R16 4.7K NO LOAD
C37 0.1 uF NO LOAD
P5LP_XRES
R19 15K
R20 15K
R23 30K
R24 30K
R17 22E
R18 22E
C38 0.1 uF
C40 1.0 uF
C41 0.1 uF
PSoC 5LP Programmer / Debugger
R22 820 ohm
LED2 Status LED Green
P5LP3_1
R25 820 ohm
LED3 Power LED Red
P5LP_POWER
Power and Status LED
VTARG
P5LP2_6
P5LP2_7
R9 2.2K
R10 2.2K
U2 NTZD3152P
R14 ZERO SDA
R15 ZERO SCL
P5LP12_1
P5LP12_0
I2C Connection
TP6 VBUS NO LOAD
F1 PTC Resettable Fuse
USB A PLUG
J1
VBUS DM DP GND S1 S2
P5LP_DM
P5LP_DP
D1 D2 D3
100K R21
C39 0.01 uF
USB Connection
C42 0.1 uF
TVS1 5V 350W
J2
50MIL KEYED SMD
R26 ZERO SWDIO
R12 ZERO SWDCLK
R13 ZERO /XRES
PRoC Program/Debug Header
PSoC 5LP and PRoC BLE Connections
PCA: 121-60161-01
PCB: 600-60197-01
FAB DRW: 610-60189-01
ASSY DRW: 620-60197-01
CYPRESS SEMICONDUCTOR © 2014
Title
BLE Dongle
Size B
Document Number 630-60193-01
Rev 03
Date: Tuesday, September 30, 2014
Sheet 2 of 3

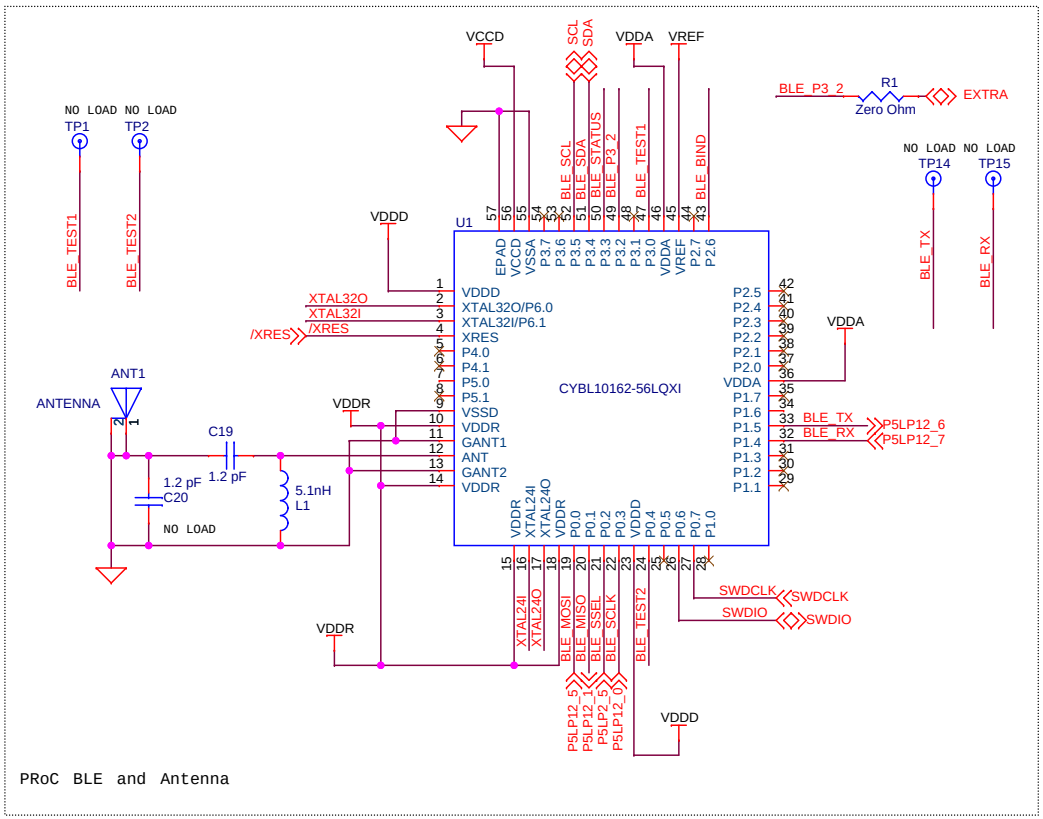

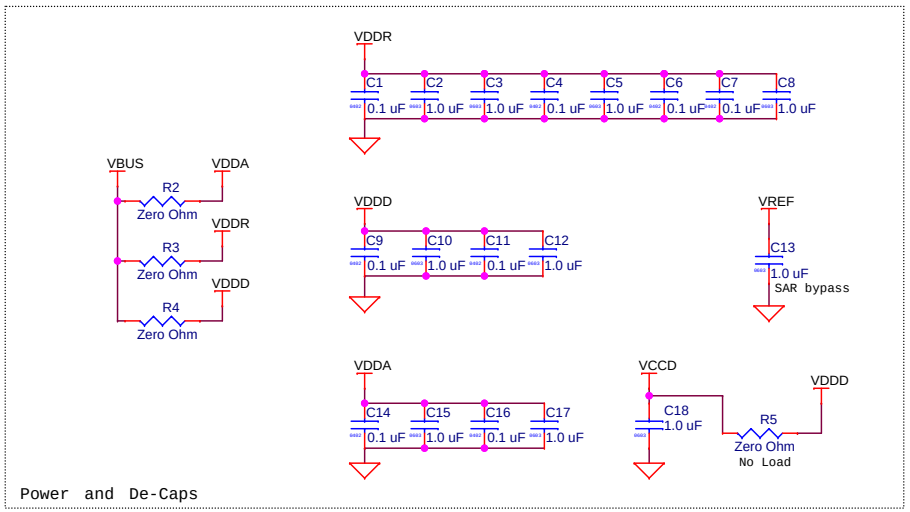

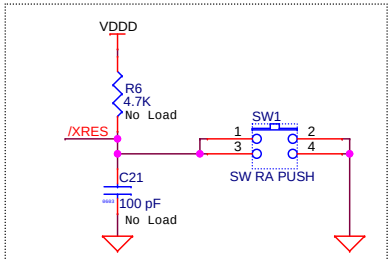

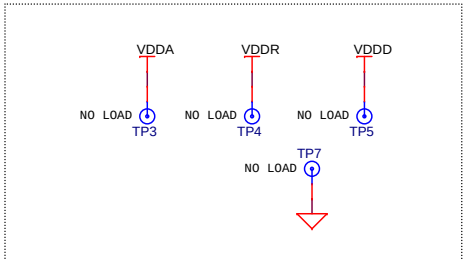

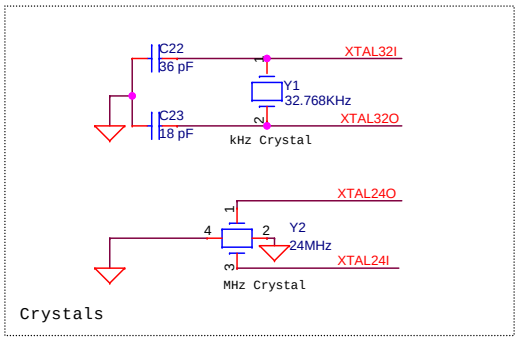

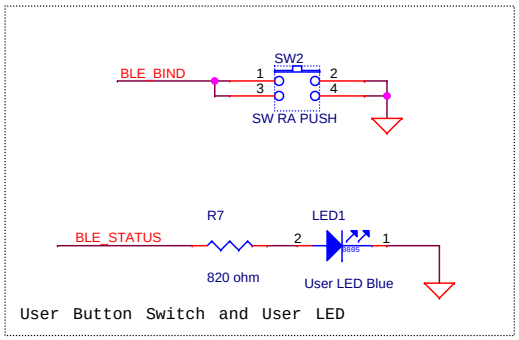

PCA: 121-60161-01
PCB: 600-60197-01
FAB DRW: 610-60189-01
ASSY DRW: 620-60197-01

CYPRESS SEMICONDUCTOR © 2014		
Title: BLE Dongle		
Size: Custom	Document Number: 630-60193-01	Rev: 03
Date: Tuesday, September 30, 2014	Sheet 3 of 3	