CYPRESS SEMICONDUCTOR

CY4613-DVK-BOARD

PAGE NO	TITLE
01	INDEX PAGE
02	BLOCK DIAGRAM
03	POWER SUPPLY
04	POWER & DECOUPLING
05	CYUSB3328-88LTXC-DEVICE CONNECTION
06	POWER SWITCHES & LED INDICATORS

PCBA NUMBER	121-60127-01
PCB NUMBER	600-60160-01
FAB DRAWING NUMBER	610-60153-01
ASSEMBLY DRAWING NUMBER	620-60158-01
SCHEMATIC NUMBER	630-60156-01

CYPRESS SEMICONDUCTOR © 2014

Title: CY4613 INDEX PAGE		
Size: A	Document Number: 630-60156-01	Rev: 5.0
Date: Tuesday, July 01, 2014	Sheet 1 of 6	

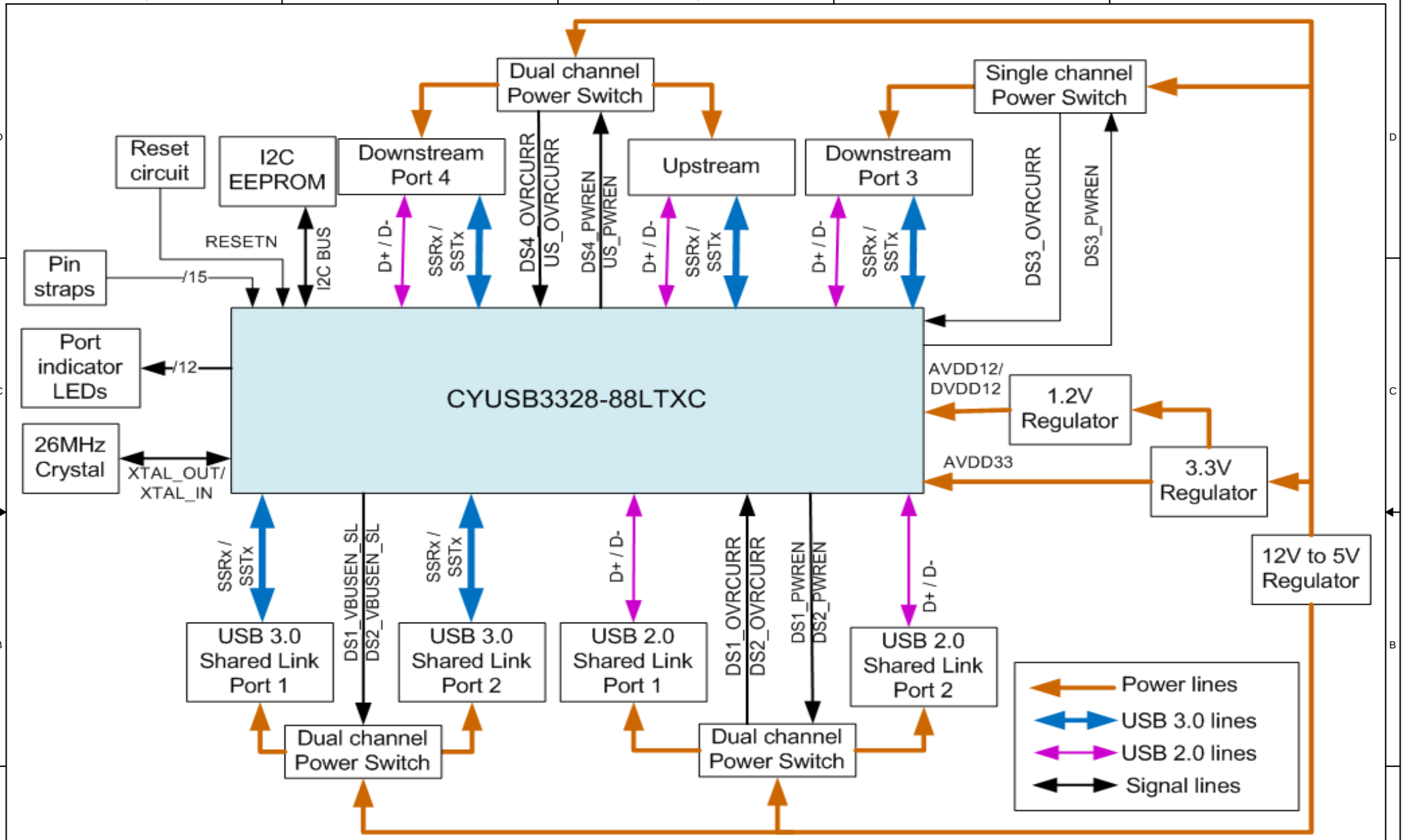

CYPRESS SEMICONDUCTOR © 2014

Title: BLOCK DIAGRAM		
Size: A	Document Number: 630-60156-01	Rev: 5.0
Date: Tuesday, July 01, 2014	Sheet 2 of 6	

POWER SUPPLY

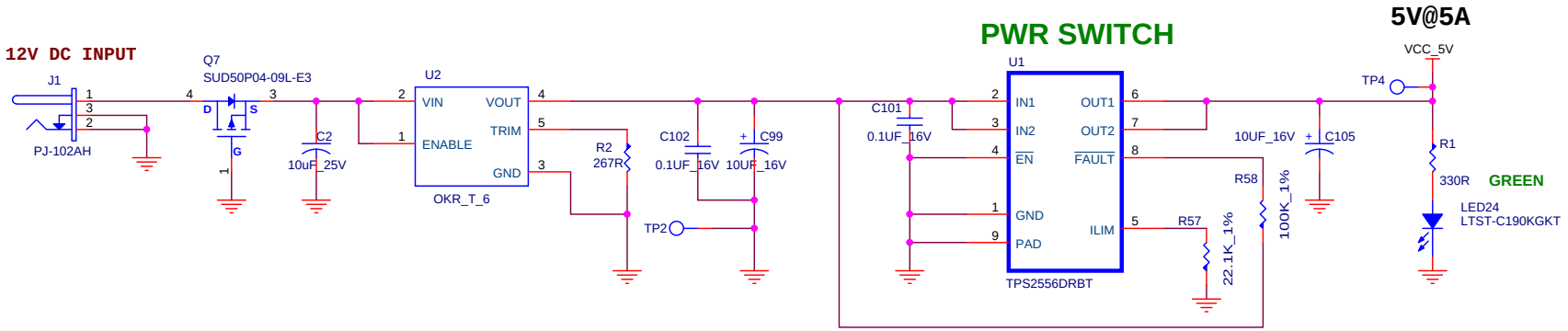

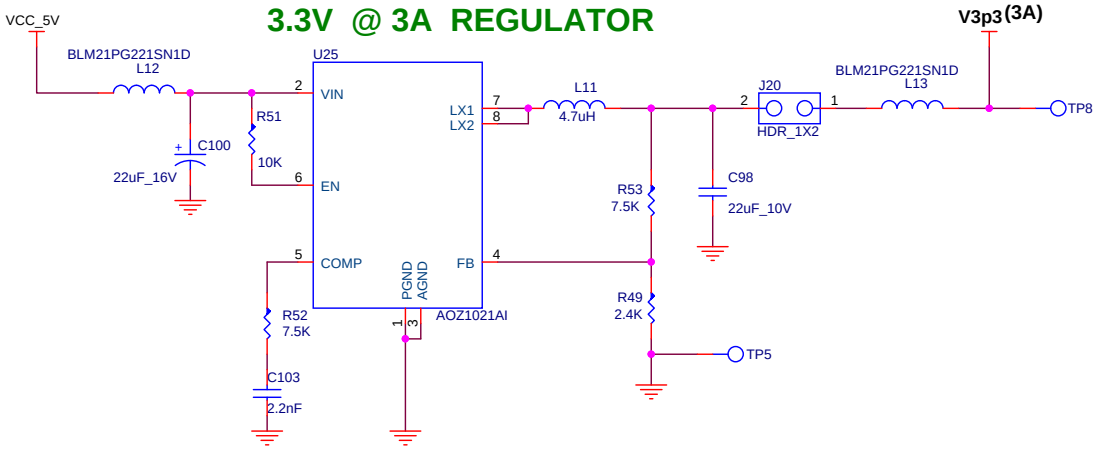

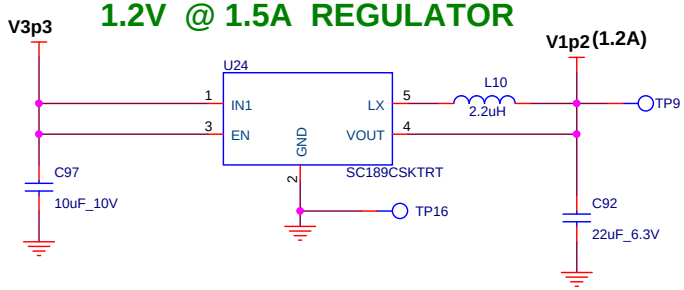

CYPRESS PERFORM

CYPRESS SEMICONDUCTOR © 2014		
Title: POWER SUPPLY		
Size: Custom	Document Number: 630-60156-01	Rev: 5.0
Date: Tuesday, June 03, 2014	Sheet 3 of 6	

POWER & DECOUPLING

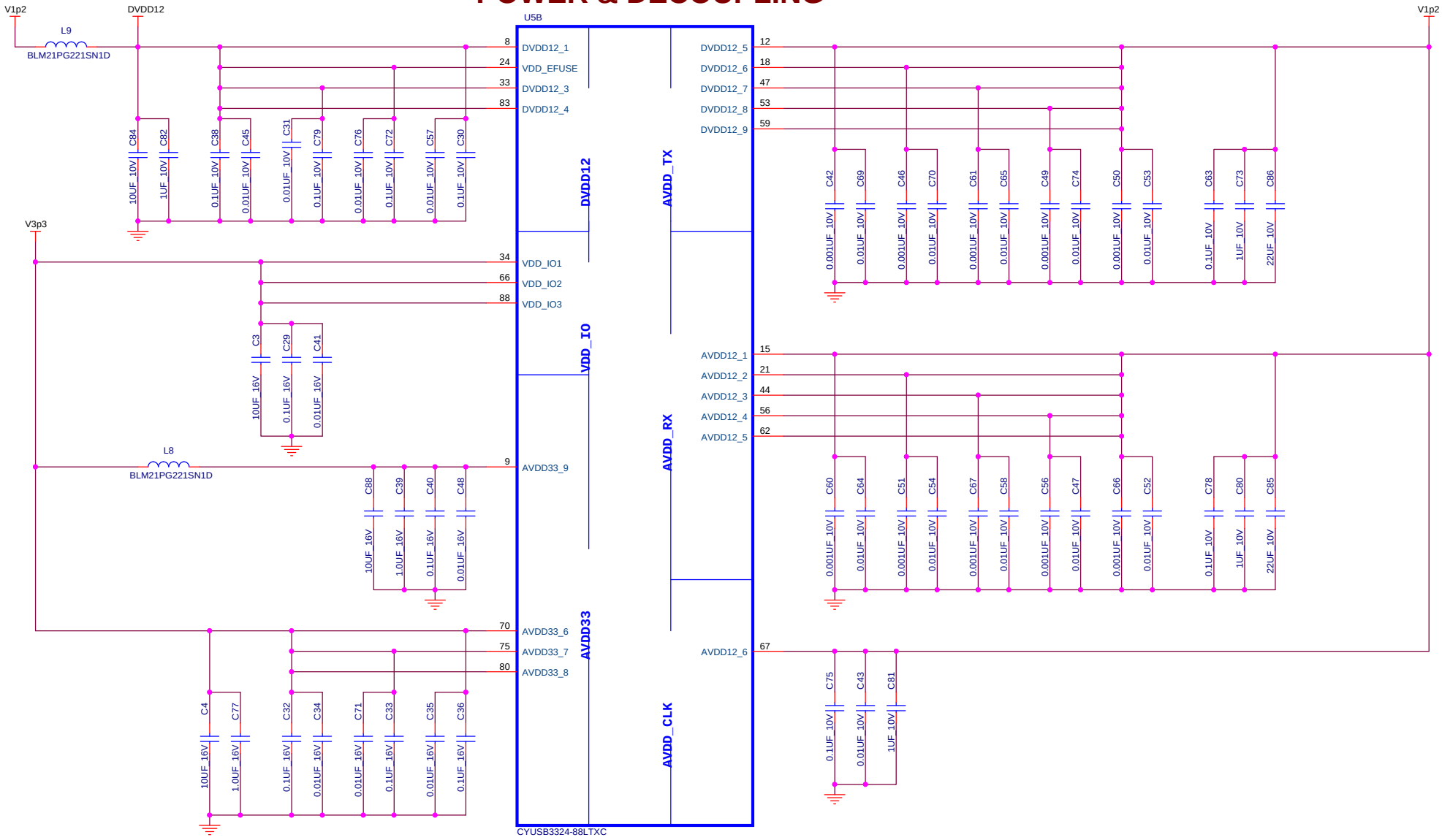

USB POSITIVE OVERVOLTAGE & OVERCURRENT PROTECTION CONTROLLER

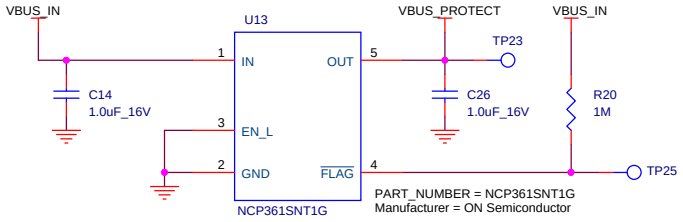

CYPRESS PERFORM

CYPRESS SEMICONDUCTOR © 2014		
Title: POWER & DECOUPLING		
Size: Custom	Document Number: 630-60156-01	Rev: 5.0
Date: Tuesday, July 01, 2014	Sheet 4 of 6	

CYUSB3328-88LTXC-DEVICE CONNECTION

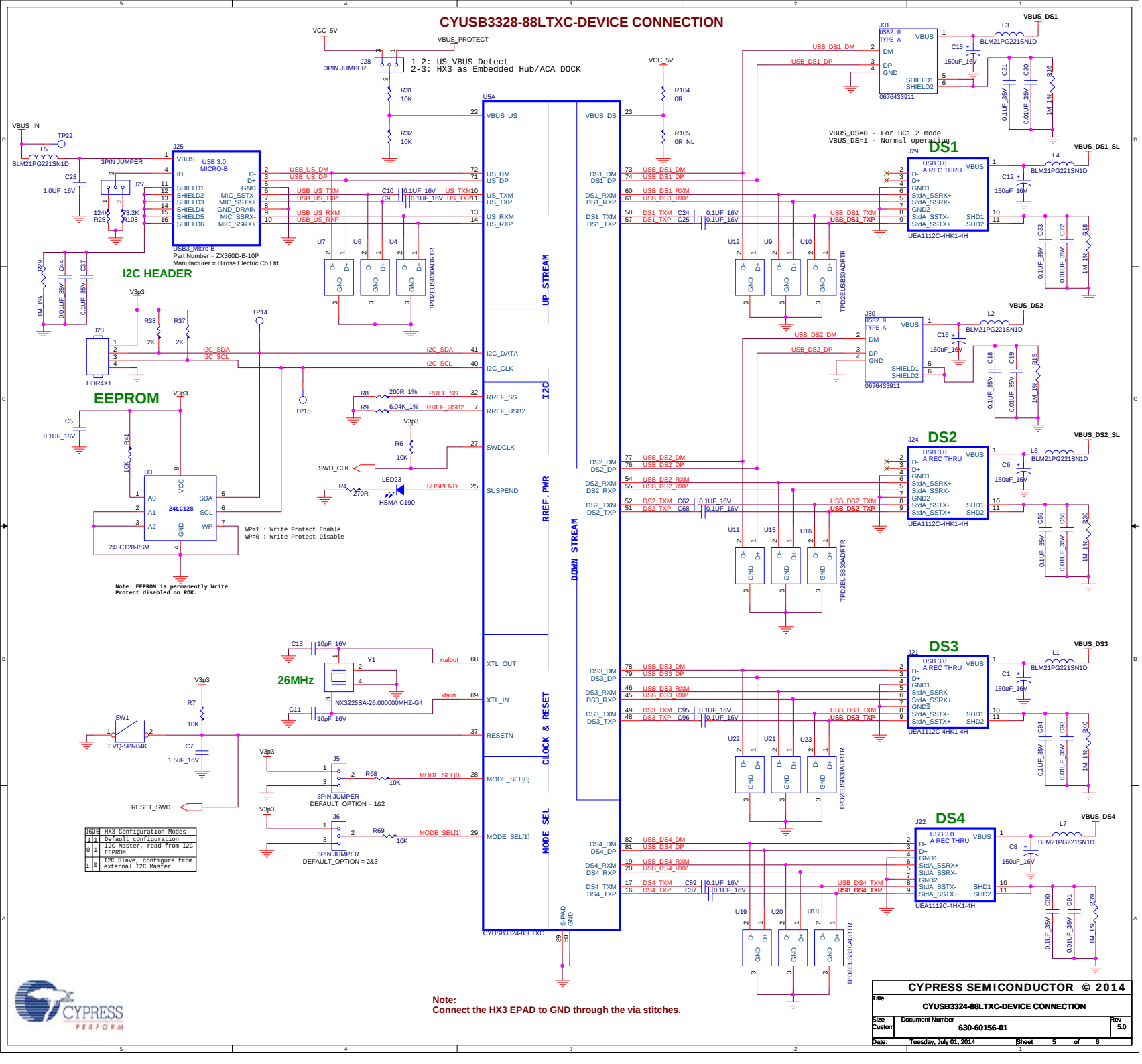

CYPRESS SEMICONDUCTOR © 2014	
Title	CYUSB3324-88LTXC-DEVICE CONNECTION
Size: Custom	Document Number: 630-60156-01
Rev	5.0
Date:	Tuesday, July 01, 2014
Sheet	5 of 6

POWER SWITCHES & LED'S

SWD Interface Program/Debug Header

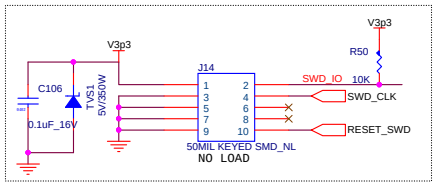

CYPRESS SEMICONDUCTOR © 2014

Title	POWER SWITCHES & LED INDICATORS	
Size: Custom	Document Number: 630-60156-01	Rev: 5.0
Date: Tuesday, July 01, 2014	Sheet 6 of 6	