SIP

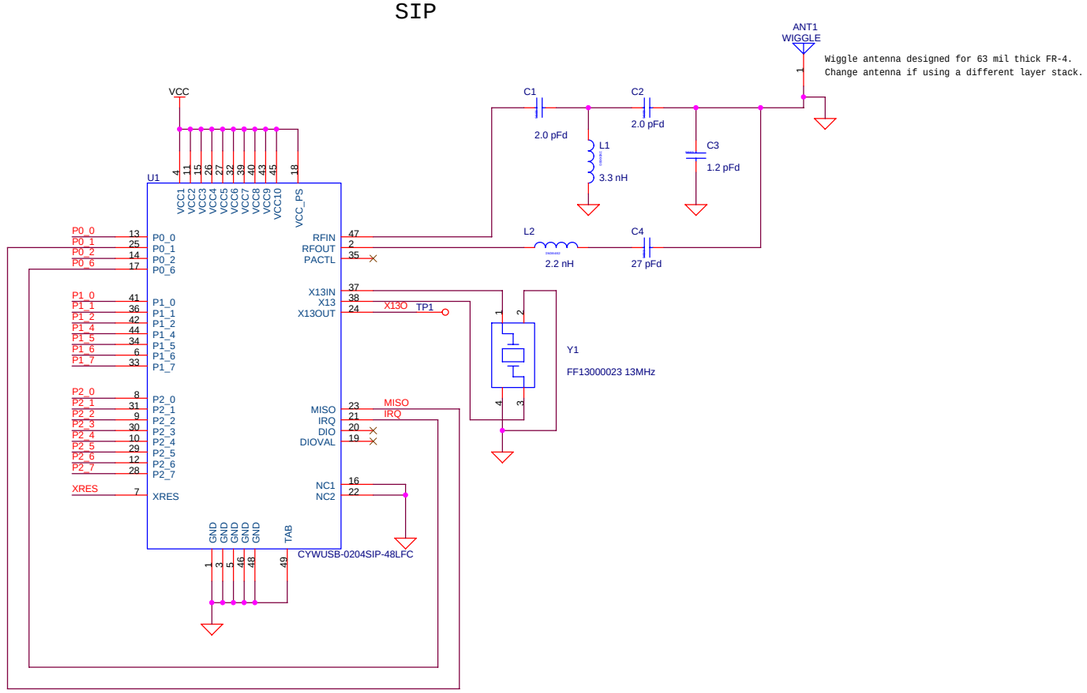

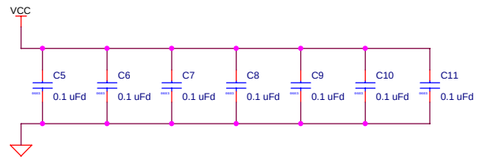

PSOC EVAL1 BOARD CONNECTOR

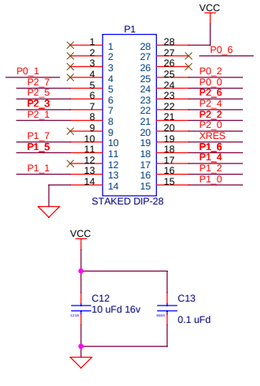

PCA: 121-23900
PCB: PDC-9239

CYPRESS SEMICONDUCTOR © 2005		
Title: PRoC DVK SIP Module		
Size: C	Document Number: REF-13110	Rev: *A
Date: Tuesday, March 22, 2005	Sheet 1 of 1	