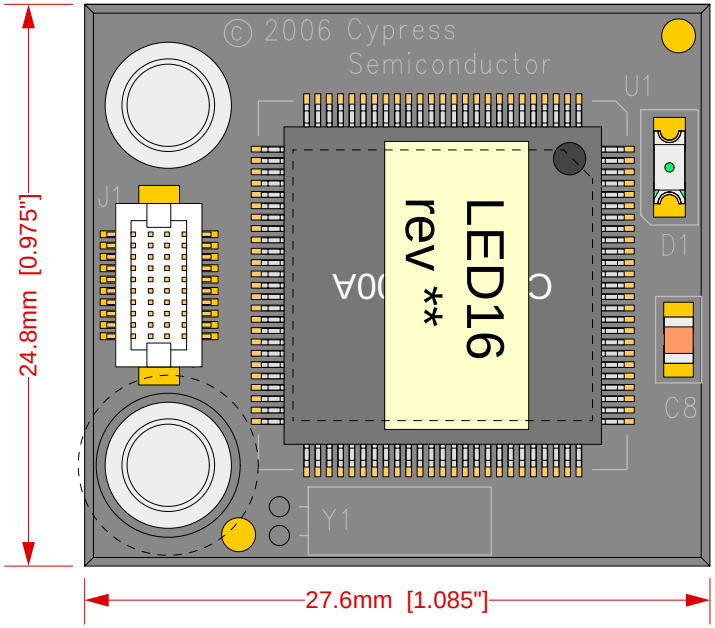

Top View

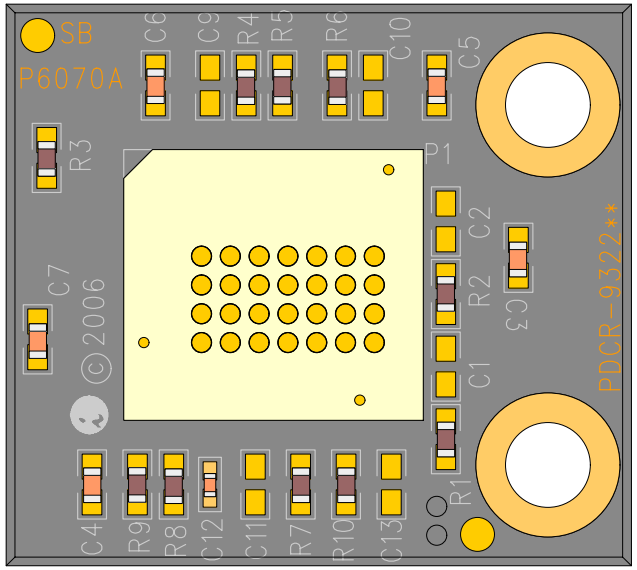

Bottom View

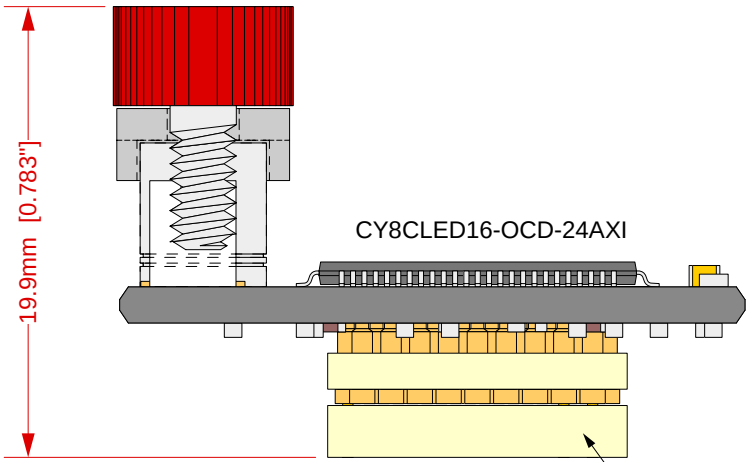

Side View

Description: **CY3250-LED16 POD**
100 pin TQFP OCD. Hirose cable connector (P/N: DF12-5.0-20DP-0.5V-81) with retension mechanism included.
Compatible with:
C3846, SSOP28 foot

			Page: 1 of 2
EA-8CLED16-NQ-01 Drawing	Status: Released	Scale: ~3:1	Rev: A
© 2008 IRONWOOD ELECTRONICS, INC. Tele: (800) 404-0204 www.ironwoodelectronics.com	Drawing: J. Glab	Date: 3/11/08	
	File: EA-8CLED16-NQ-01 Dwg.mcd	Modified:	

Tolerances: diameters ±0.03mm [±0.001"], PCB perimeters ±0.13mm [±0.005"], PCB thicknesses ±0.18mm [±0.007"], pitches (from true position) ±0.08mm [±0.003"], all other tolerances ±0.13mm [±0.005"] unless stated otherwise. Materials and specifications are subject to change without notice.

[+] Feedback

POD clearance, with respect to center of target pattern

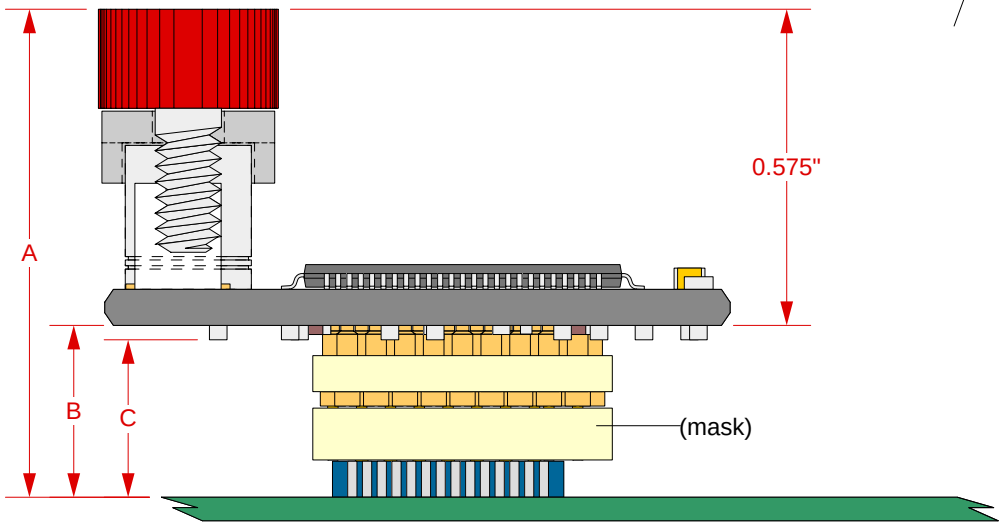

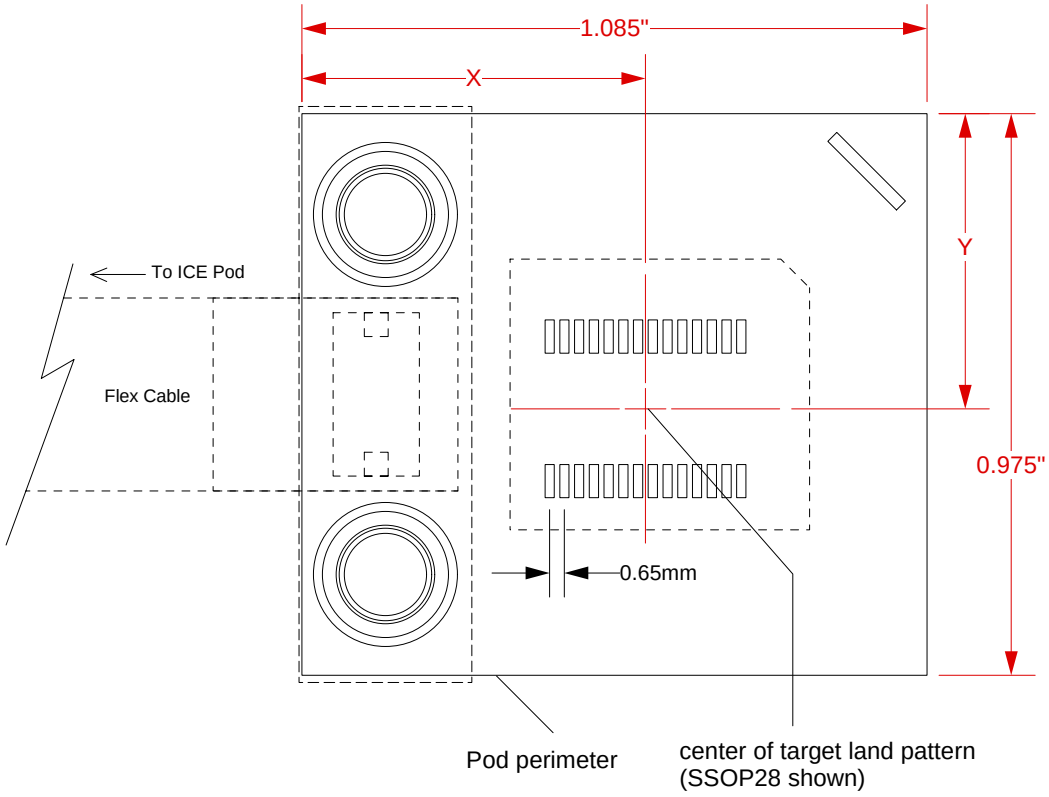

Foot Part number	Description	Mask required	A	B	C	X	Y
C3846	SSOP28 foot	yes	0.875"	0.300"	0.275"	0.596"	0.513"

EA-8CLED16-NQ-01 Drawing	Status: Released	Scale: ~3:1	Rev: A
© 2008 IRONWOOD ELECTRONICS, INC. Tele: (800) 404-0204 www.ironwoodelectronics.com	Drawing: J. Glab	Date: 3/11/08	
	File: EA-8CLED16-NQ-01 Dwg.mcd	Modified:	

Tolerances: diameters ±0.03mm [±0.001"], PCB perimeters ±0.13mm [±0.005"], PCB thicknesses ±0.18mm [±0.007"], pitches (from true position) ±0.08mm [±0.003"], all other tolerances ±0.13mm [±0.005"] unless stated otherwise. Materials and specifications are subject to change without notice.

[+] Feedback