Diamond POD Schematic (48MLF)

Revision History

Rev 0.1 Original

Rev 0.2 4/12/06 S.Delano - MGA was J1, Hirose 20 pin was J2, PCB # was PDC-9313 **

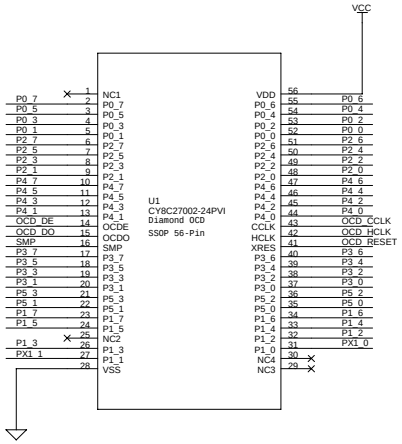

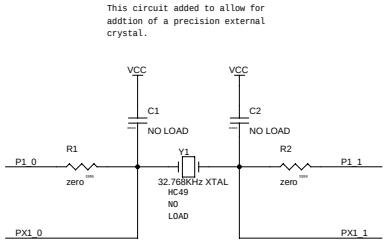

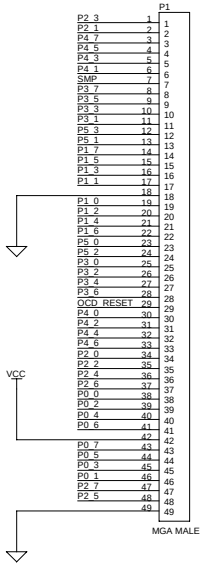

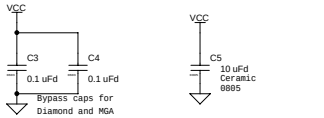

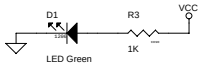

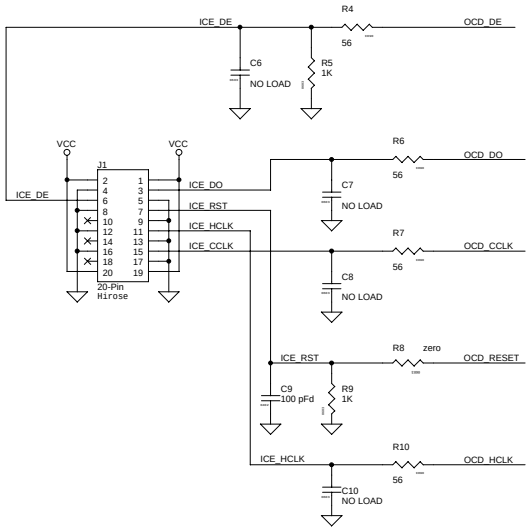

PCB: PDCR-9313 **
PCA: 121-31300 **

CYPRESS SEMICONDUCTOR © 2005

Title: Diamond 48MLF POD		
Size: C	Document Number: REF-13448	Rev: 0.2
Date: Wednesday, April 12, 2006	Sheet 1 of 1	