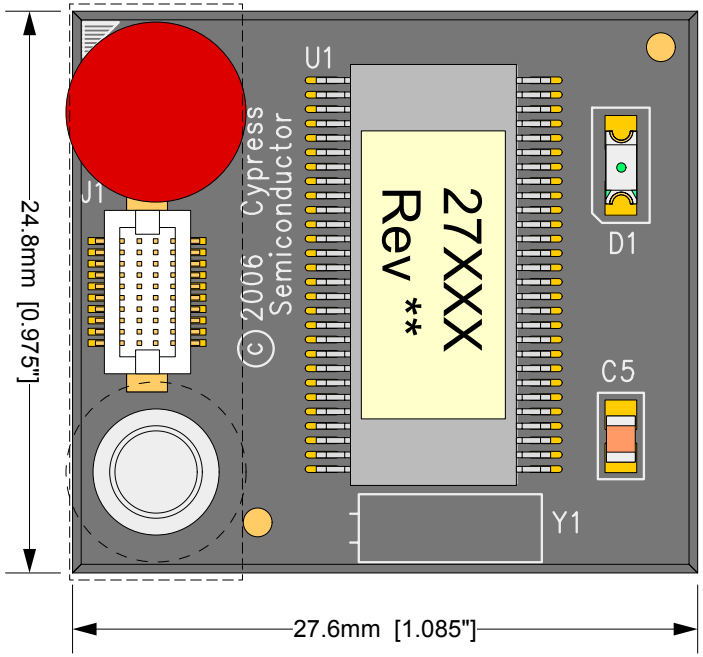

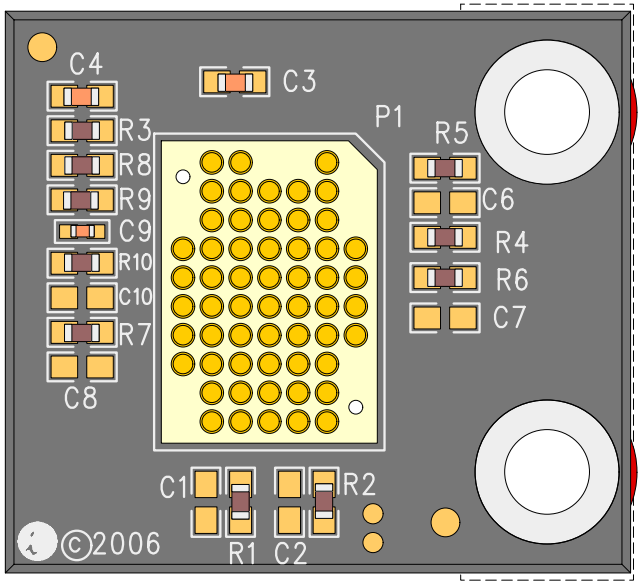

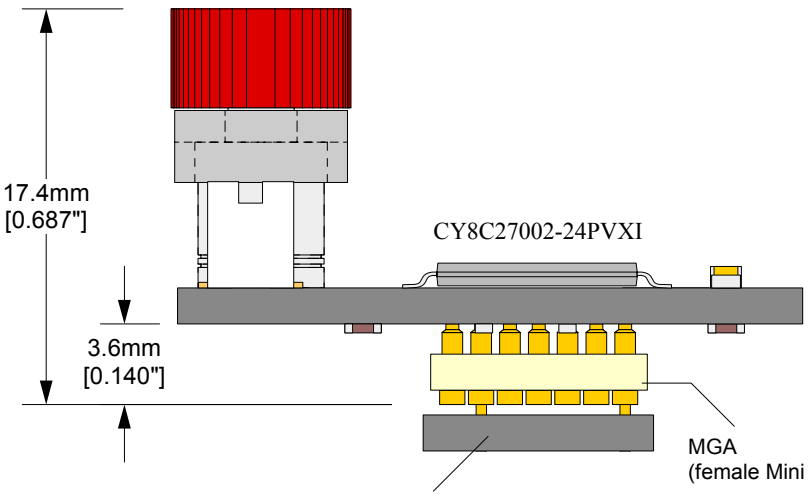

Description: **CY8C27XXX POD**
SSOP56 OCD (CY8C27002-24PVXI).
Hirose cable connector with retension mechanism included.
Compatible with:
XT-PSoC-15-20H-10-01 - Flex cable (to ICE cube)
Compatible with the following Non-QFN feet:
C4102 - PDIP8
C3845 - SSOP20 foot
C3848 - SOIC20 foot
C3846 - SSOP28 foot
C3849 - SOIC28 foot
C4104 - PDIP28 foot
C3850 - TQFP44 foot
C3847 - SSOP48 foot

Foot alignment Masks (plugs onto MGA)

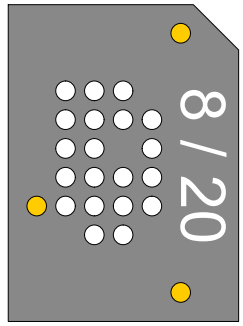

C4253
(for 8 & 20 pin feet)

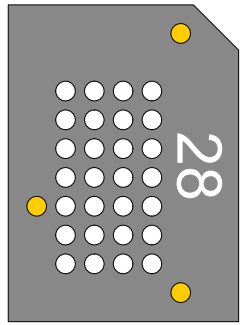

C4254
(for 28 pin feet)

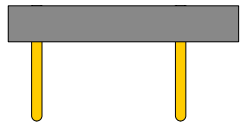

EA-8C27002-NQ-01 Drawing	Status: Released	Scale: 3:1	Rev: E
© 2006 IRONWOOD ELECTRONICS, INC. Tele: (800) 404-0204 www.ironwoodelectronics.com	Drawing: M. Tully	Date: 7/20/06	
	File: EA-8C27002-NQ-01 Dwg	Modified: 10/6/06, MT	

Tolerances: diameters ±0.03mm [±0.001"],
PCB perimeters ±0.13mm [±0.005"],
PCB thicknesses ±0.18mm [±0.007"],
pitches (from true position) ±0.08mm [±0.003"],
all other tolerances ±0.13mm [±0.005"]
unless stated otherwise. Materials and specifications are subject to change without notice.

POD clearance, with respect to center of target pattern

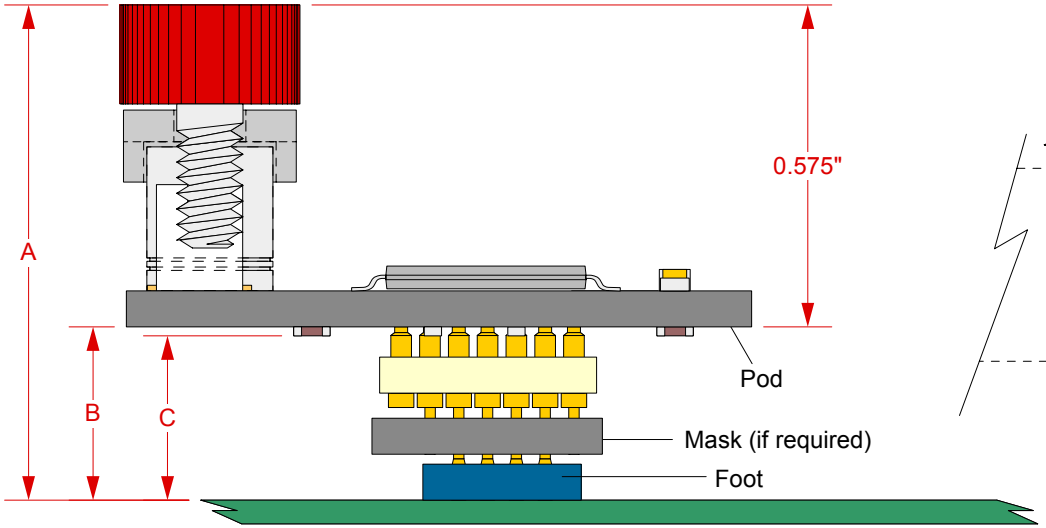

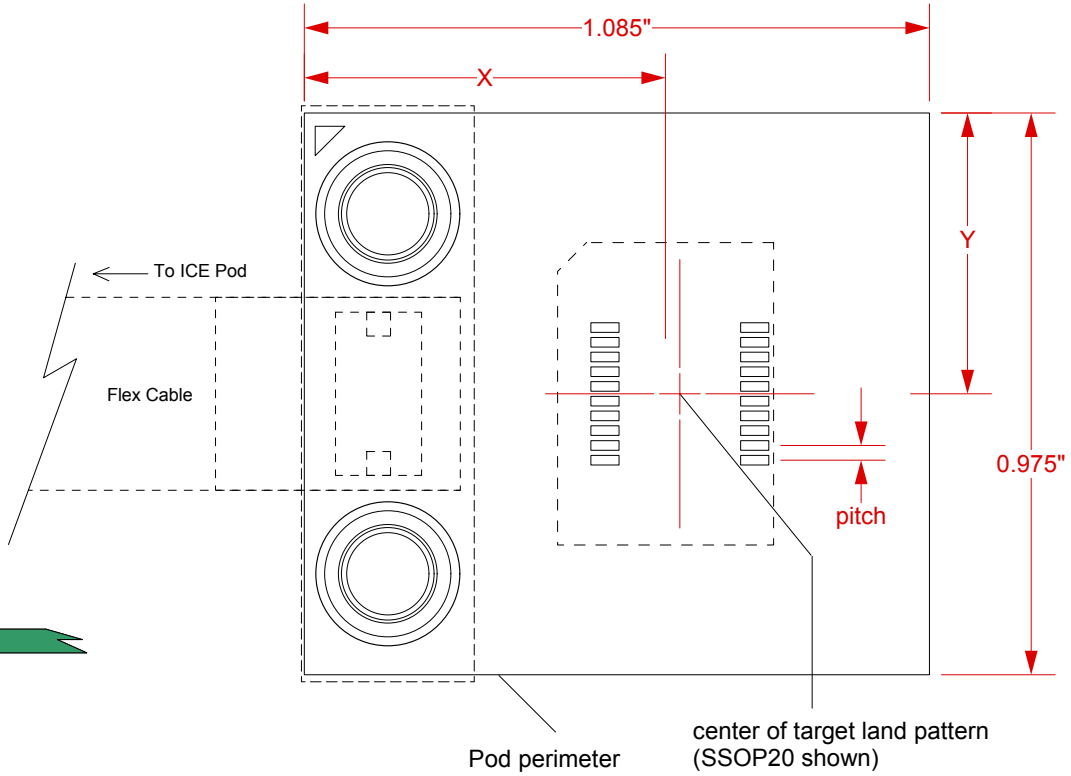

Foot Part number	Description	Pitch	Mask required	A	B	C	X	Y
C4102	PDIP8 foot	0.100"	C4253	0.978"	0.403"	0.377"	0.652"	0.488"
C3845	SSOP20 foot	0.65mm	C4253	0.865"	0.290"	0.265"	0.652"	0.488"
C3848	SOIC20 foot	0.050"	C4253	0.865"	0.290"	0.265"	0.652"	0.488"
C3846	SSOP28 foot	0.65mm	C4254	0.865"	0.290"	0.265"	0.652"	0.513"
C3849	SOIC28 foot	0.050"	C4254	0.865"	0.290"	0.265"	0.652"	0.513"
C4104	PDIP28 foot	0.100"	C4254	0.978"	0.403"	0.377"	0.652"	0.513"
C3850	TQFP44 foot	0.8mm	no	0.848"	0.273"	0.248"	0.627"	0.513"
C3847	SSOP48 foot	0.100"	no	0.848"	0.273"	0.248"	0.627"	0.488"

With C4104 foot
PDIP28

EA-8C27002-NQ-01 Drawing	Status: Released	Scale: 3:1	Rev: E
© 2006 IRONWOOD ELECTRONICS, INC. Tele: (800) 404-0204 www.ironwoodelectronics.com	Drawing: M. Tully	Date: 7/20/06	
	File: EA-8C27002-NQ-01 Dwg	Modified: 10/6/06, MT	

Tolerances: diameters ±0.03mm [±0.001"],
PCB perimeters ±0.13mm [±0.005"],
PCB thicknesses ±0.18mm [±0.007"],
pitches (from true position) ±0.08mm [±0.003"],
all other tolerances ±0.13mm [±0.005"]
unless stated otherwise. Materials and
specifications are subject to change without notice.