Lithium LV NON QFN POD Schematic

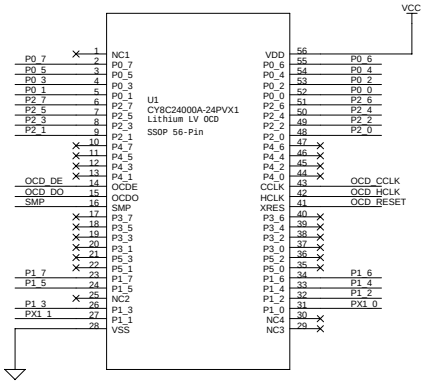

This circuit added to allow for addtion of a precision external crystal.

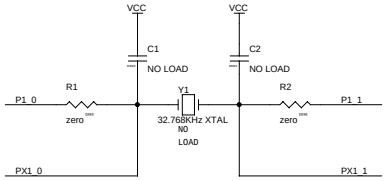

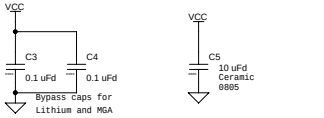

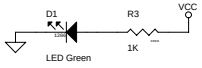

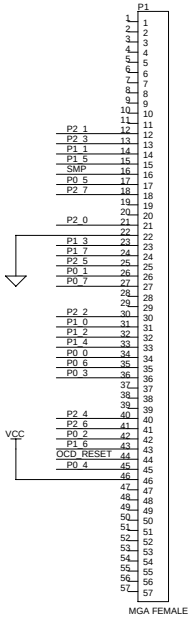

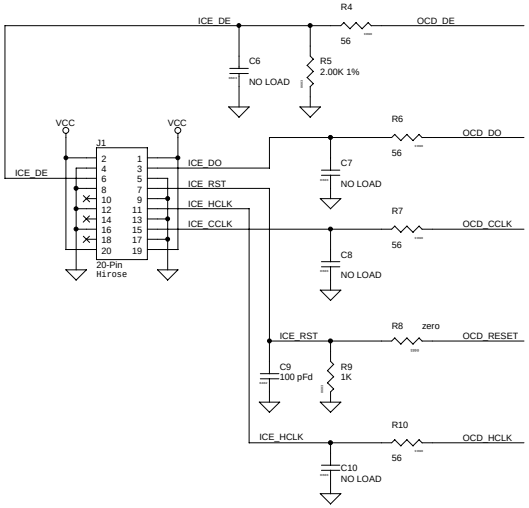

Revision History

Rev 0.1 - Original

Rev 0.2 - Changed reference designators to match the Diamond non-QFN schematic (REF-13643).

PCB: PDC-9350 **
PCA: 121R-35001 **

CYPRESS SEMICONDUCTOR © 2005

Title: Lithium LV NON QFN POD		
Size: C	Document Number: REF-13644	Rev: 0.2
Date: Tuesday, July 25, 2006	Sheet 1 of 1	