Neutron NON-QFN POD Schematic

Revision History

Rev 0.1 Original

Rev 0.2, 5/23/06, S.Delano, P1 (MGA) renumbered to match PCB MGA numbering.

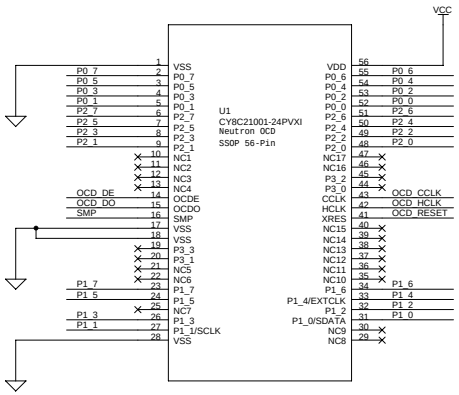

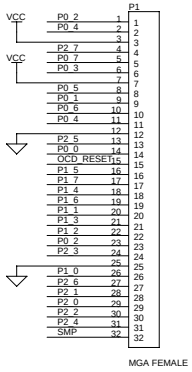

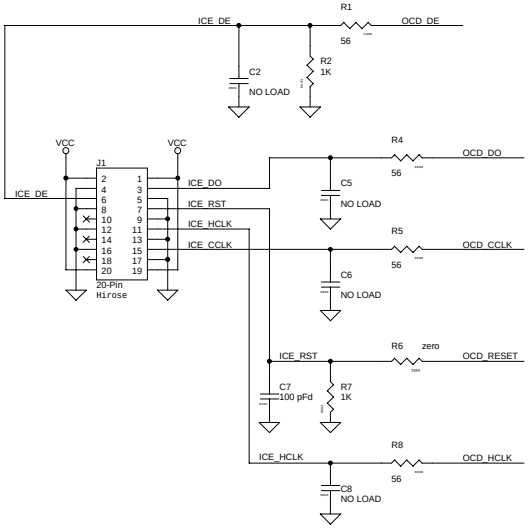

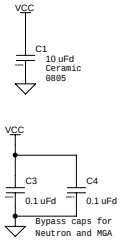

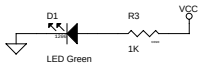

PCB: PDCR-9323 **
PCA: 121R-32300 **

CYPRESS SEMICONDUCTOR © 2005		
Title: Neutron NON-QFN POD		
Size: C	Document Number: REF-13503	Rev: 0.2
Date: Wednesday, May 24, 2006	Sheet 1 of 1	