PROPRIETARY INFORMATION:
Information contained in this drawing is confidential. Copying, distributing or use in any matter, other than that specified by IRONWOOD ELECTRONICS, INC., is strictly prohibited and may be unlawful. If you have received this drawing in error, please destroy or return to IRONWOOD ELECTRONICS, INC. at the address listed below.

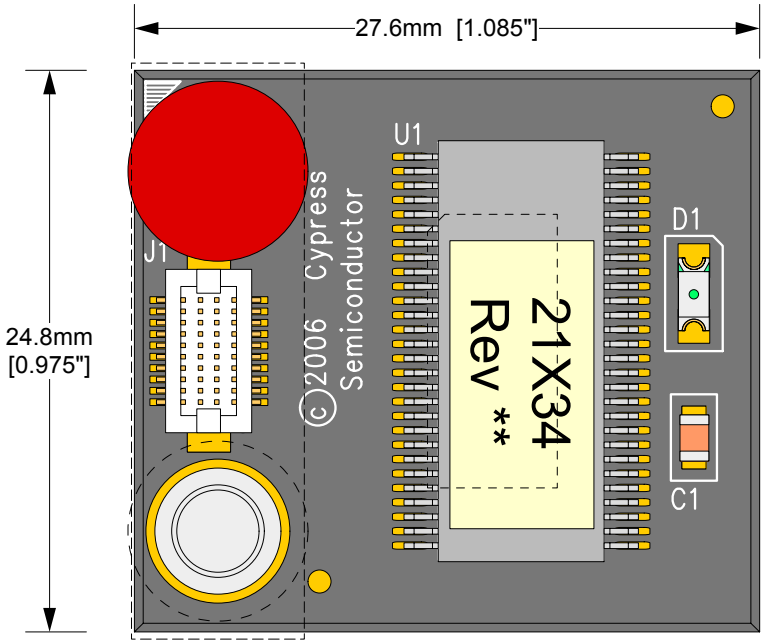

Top View

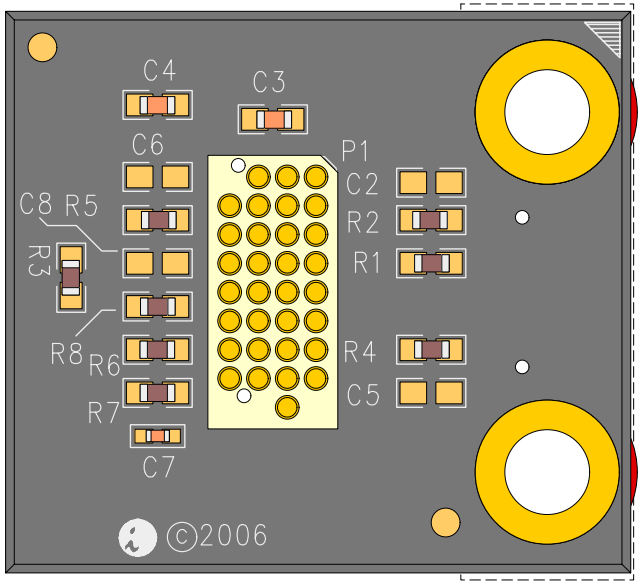

Bottom View

Foot alignment Mask (plugs onto MGA)

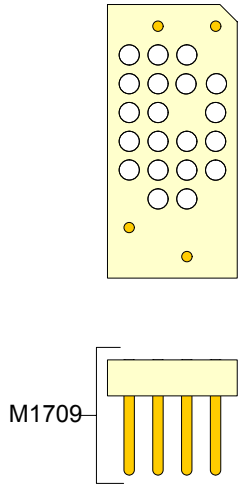

(for 20 pin feet, included)

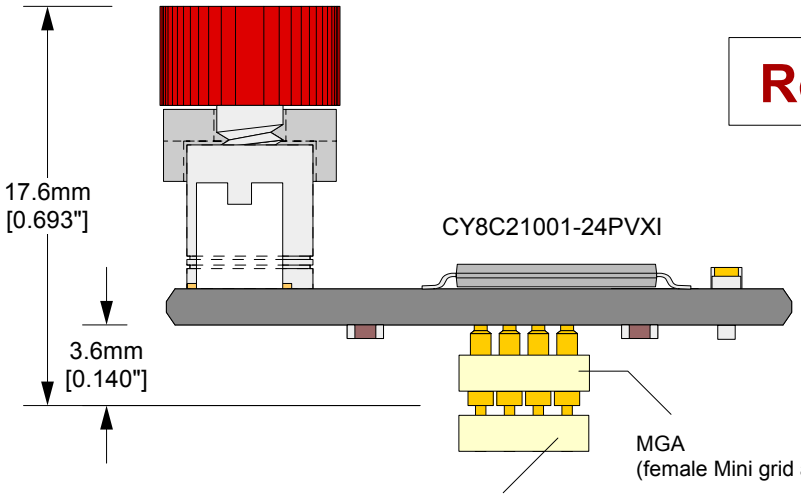

Side View

Aligment mask, required for SSOP20 foot

RoHS COMPLIANT

Description: **CY3250-21X34 POD**
SSOP56 OCD (CY8C21001-24PVXI).
Hirose cable connector with retension mechanism included.
Compatible with:
XT-PSoC-15-20H-10-01 - Flex cable (to ICE cube)

Compatible with the following Non-QFN feet:

C6822 - SOIC16
C3845 - SSOP20 foot
C3846 - SSOP28 foot

EA-8C21034-NQ-01 Drawing	Status:	Scale: 3:1	Rev: C
© 2006 IRONWOOD ELECTRONICS, INC. PO BOX21151 ST. PAUL, MN 55121 Tele: (651) 452-8100 www.ironwoodelectronics.com	Drawing: M. Tully		Date: 7/24/06
	File: EA-8C21034-NQ-01 Dwg		Modified: 8/17/06, MT

Tolerances: diameters ±0.03mm [±0.001"],
PCB perimeters ±0.13mm [±0.005"],
PCB thicknesses ±0.18mm [±0.007"],
pitches (from true position) ±0.08mm [±0.003"],
all other tolerances ±0.13mm [±0.005"]
unless stated otherwise. Materials and specifications are subject to change without notice.

POD clearance, with respect to center of target pattern

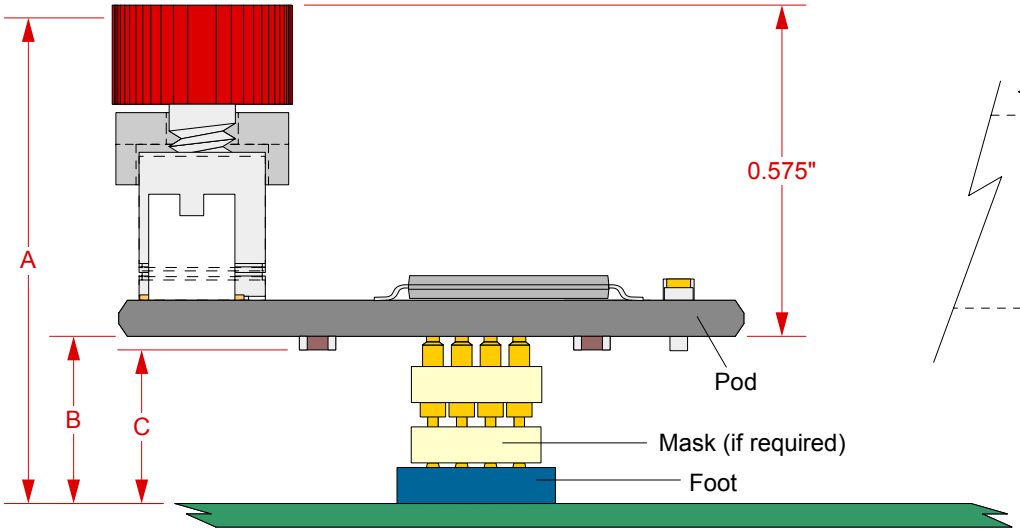

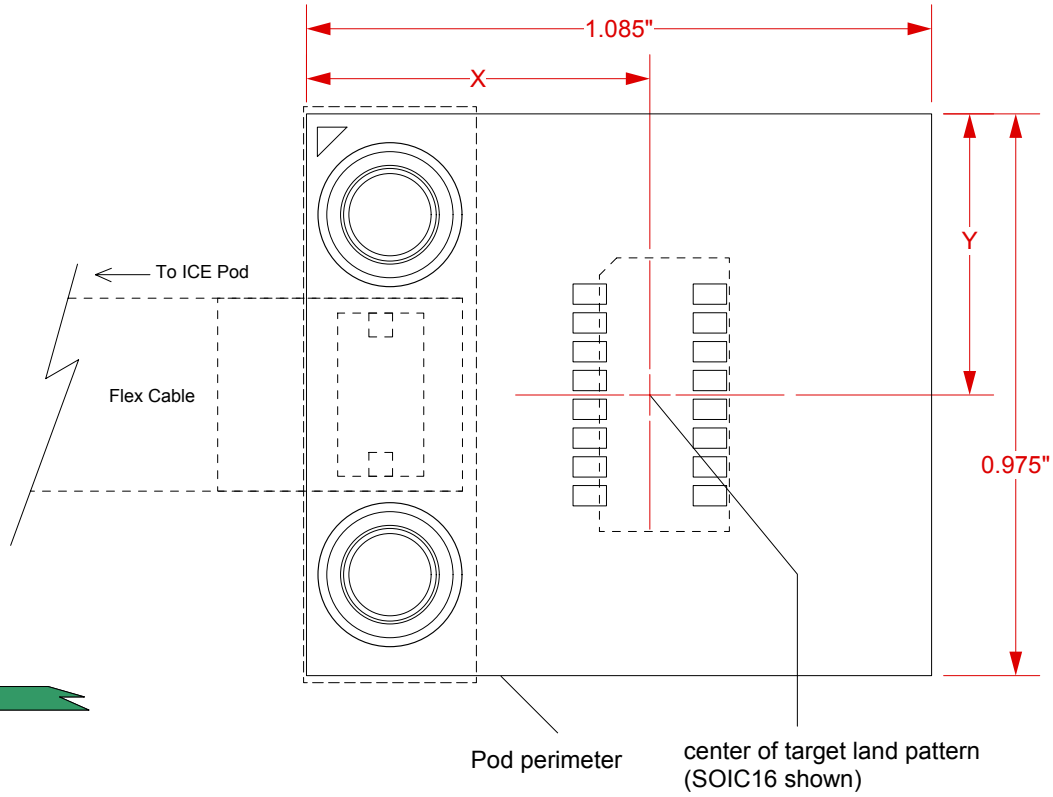

Foot Part number	Description	Mask required	A	B	C	X	Y
C6822	SOIC16 foot	no	0.847"	0.272"	0.247"	0.596"	0.488"
C3845	SSOP 20 foot	yes	0.867"	0.292"	0.267"	0.621"	0.465"
C3846	SSOP28 foot	no	0.847"	0.272"	0.247"	0.622"	0.488"

EA-8C21034-NQ-01 Drawing	Status:	Scale: 3:1	Rev: C
© 2006 IRONWOOD ELECTRONICS, INC. PO BOX21151 ST. PAUL, MN 55121 Tele: (651) 452-8100 www.ironwoodelectronics.com	Drawing: M. Tully	Date: 7/24/06	
	File: EA-8C21034-NQ-01 Dwg	Modified: 8/17/06, MT	

Tolerances: diameters ±0.03mm [±0.001"],
PCB perimeters ±0.13mm [±0.005"],
PCB thicknesses ±0.18mm [±0.007"],
pitches (from true position) ±0.08mm [±0.003"],
all other tolerances ±0.13mm [±0.005"]
unless stated otherwise. Materials and
specifications are subject to change without notice.