PROPRIETARY INFORMATION:
Information contained in this drawing is confidential. Copying, distributing or use in any matter, other than that specified by IRONWOOD ELECTRONICS, INC., is strictly prohibited and may be unlawful. If you have received this drawing in error, please destroy or return to IRONWOOD ELECTRONICS, INC. at the address listed below.

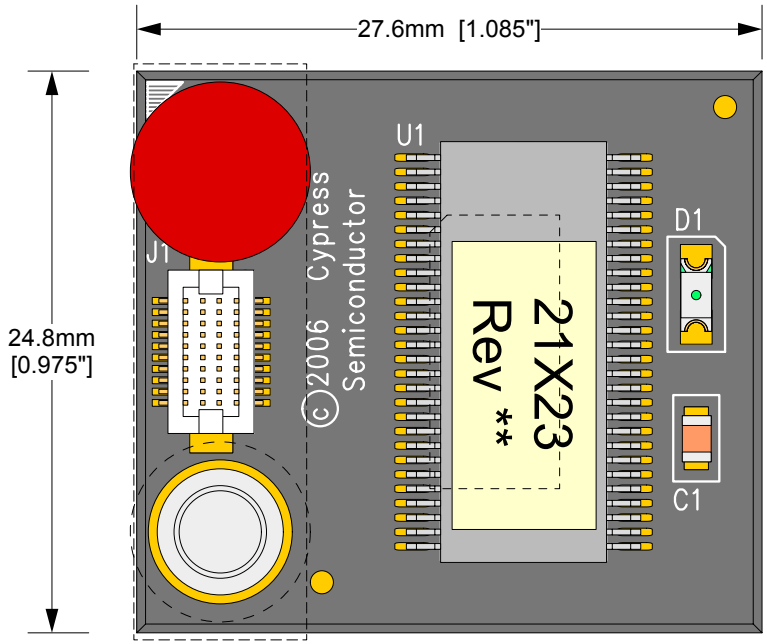

Top View

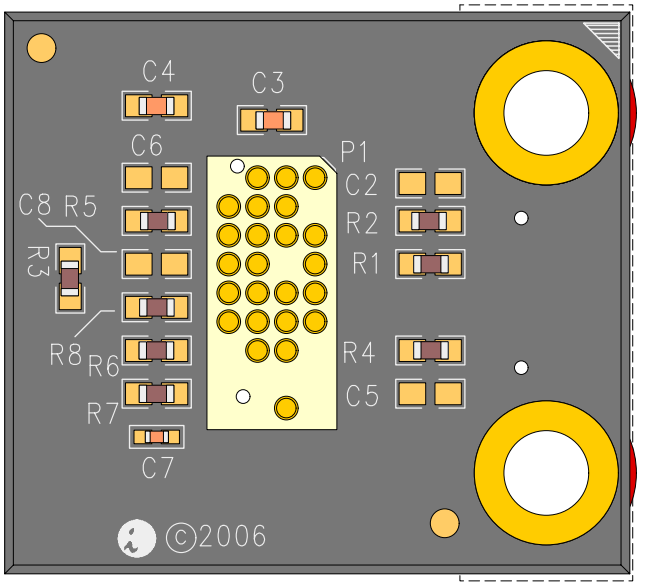

Bottom View

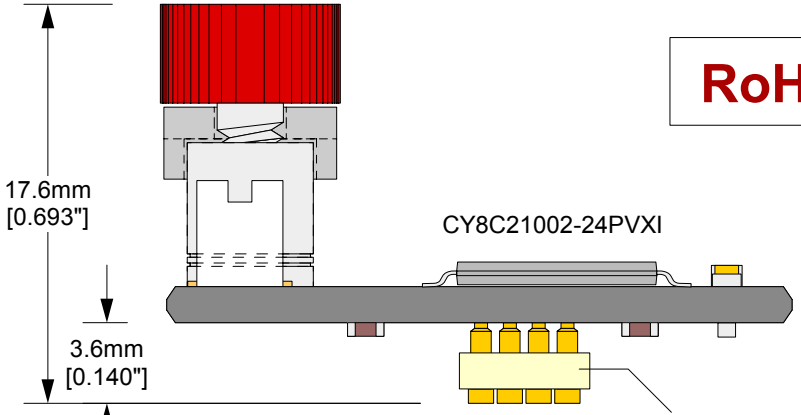

Side View

RoHS COMPLIANT

Description: **CY3250-21X23 POD**
SSOP56 OCD (CY8C21002-24PVXI).
Hirose cable connector with retension mechanism included.
Compatible with:
XT-PSoC-15-20H-10-01 - Flex cable (to ICE cube)

Compatible with the following Non-QFN feet:

C5116 - SOIC8
C6822 - SOIC16 foot
C3845 - SSOP20 foot

EA-8C21023-NQ-01 Drawing	Status:	Scale: 3:1	Rev: C
© 2006 IRONWOOD ELECTRONICS, INC. PO BOX21151 ST. PAUL, MN 55121 Tele: (651) 452-8100 www.ironwoodelectronics.com	Drawing: M. Tully		Date: 8/1/06
	File: EA-8C21023-NQ-01 Dwg		Modified: 8/17/06, MT

Tolerances: diameters ±0.03mm [±0.001"],
PCB perimeters ±0.13mm [±0.005"],
PCB thicknesses ±0.18mm [±0.007"],
pitches (from true position) ±0.08mm [±0.003"],
all other tolerances ±0.13mm [±0.005"]
unless stated otherwise. Materials and
specifications are subject to change without notice.

POD clearance, with respect to center of target pattern

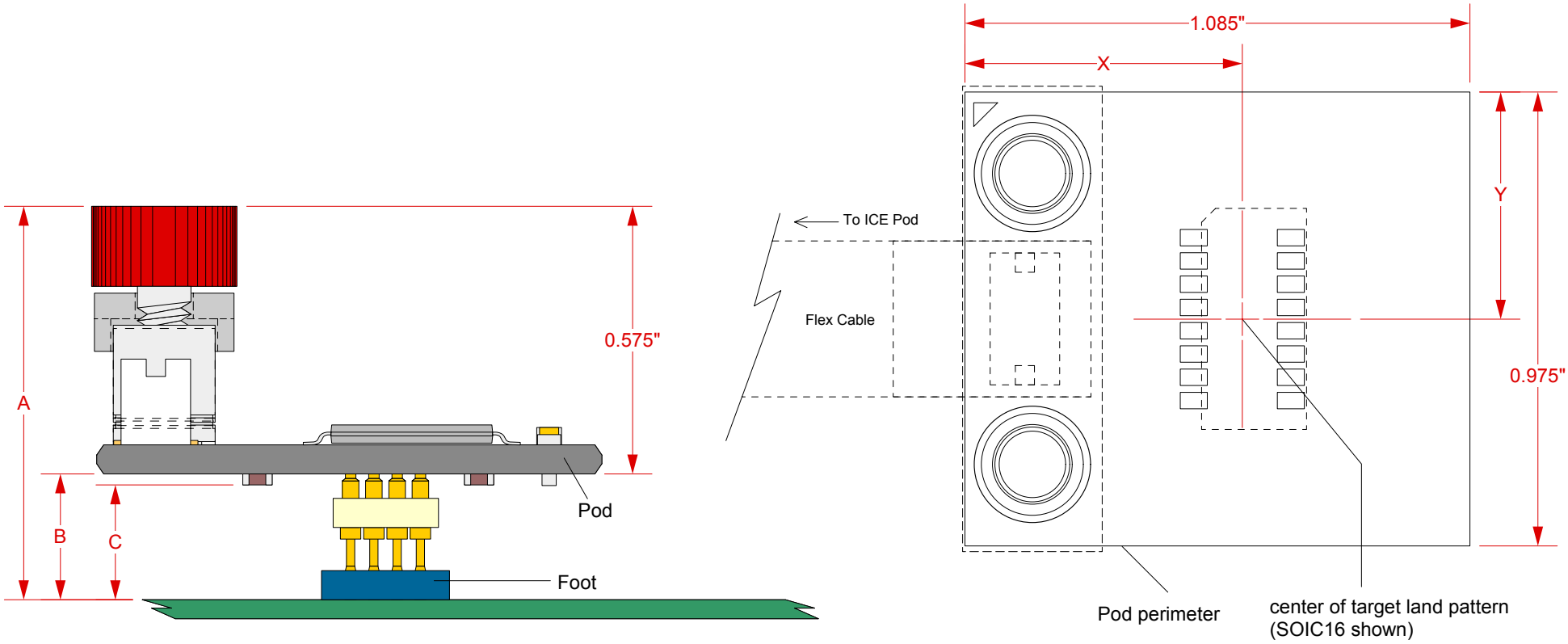

Foot Part number	Description	Mask required	A	B	C	X	Y
C5116	SOIC 8 foot	no	0.845"	0.270"	0.245"	0.622"	0.513"
C6822	SOIC16 foot	no	0.845"	0.270"	0.245"	0.596"	0.488"
C3845	SSOP 20 foot	no	0.845"	0.270"	0.265"	0.621"	0.465"

EA-8C21023-NQ-01 Drawing	Status:	Scale: 3:1	Rev: C
© 2006 IRONWOOD ELECTRONICS, INC. PO BOX21151 ST. PAUL, MN 55121 Tele: (651) 452-8100 www.ironwoodelectronics.com	Drawing: M. Tully		Date: 8/1/06
	File: EA-8C21023-NQ-01 Dwg		Modified: 8/17/06, MT

Tolerances: diameters ±0.03mm [±0.001"],
PCB perimeters ±0.13mm [±0.005"],
PCB thicknesses ±0.18mm [±0.007"],
pitches (from true position) ±0.08mm [±0.003"],
all other tolerances ±0.13mm [±0.005"]
unless stated otherwise. Materials and
specifications are subject to change without notice.