Quark POD Schematic (32 MLF)

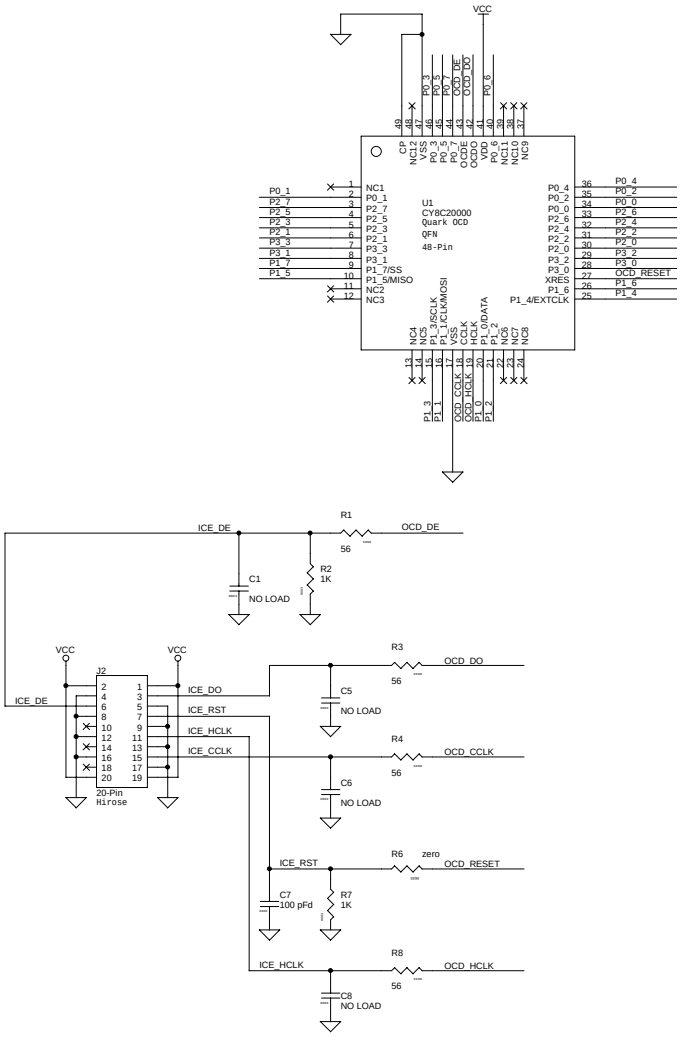

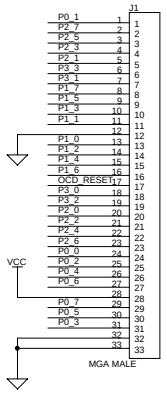

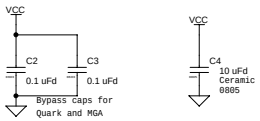



Revision History

Rev 0.1 Original

PCB: PDC-9305 **
PCA: 121-30500 **

CYPRESS SEMICONDUCTOR © 2005		
Title: Quark 32 MLF POD		
Size: C	Document Number: REF-13439	Rev: **
Date: Monday, February 20, 2006	Sheet 1 of 1	