Quark POD Schematic (24 MLF)

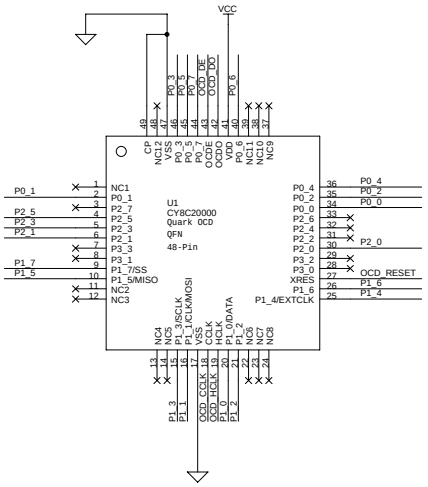

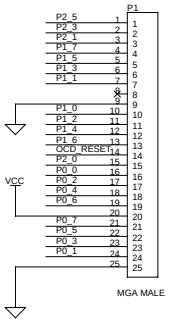

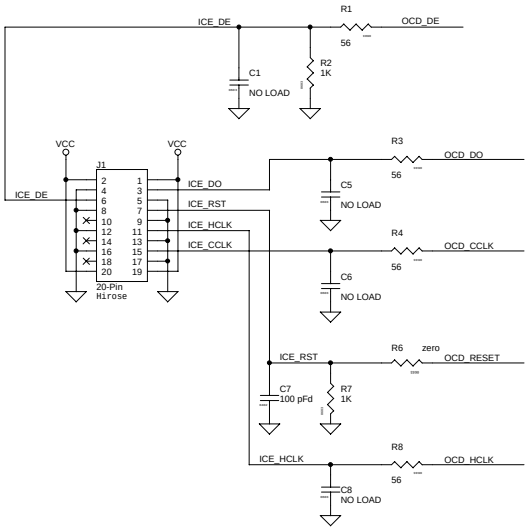

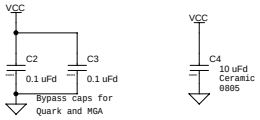



Revision History

Rev 0.1 Original

PCB: PDC-9316 **
PCA: 121-31600 **

CYPRESS SEMICONDUCTOR © 2005		
Title: Quark 24 MLF POD		
Size: C	Document Number: REF-13465	Rev: **
Date: Thursday, April 13, 2006	Sheet 1 of 1	