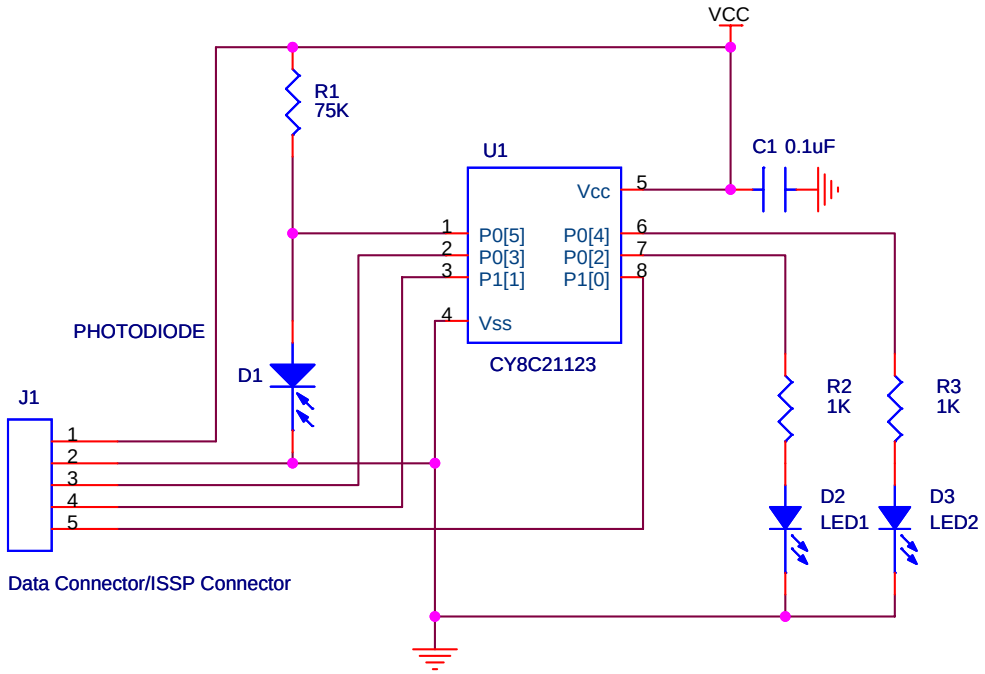

Title	I2C Demo Target Board	
Size: Custom	Document Number: REF-13655	Rev: **
Date: Monday, August 07, 2006	Sheet 1 of 1	