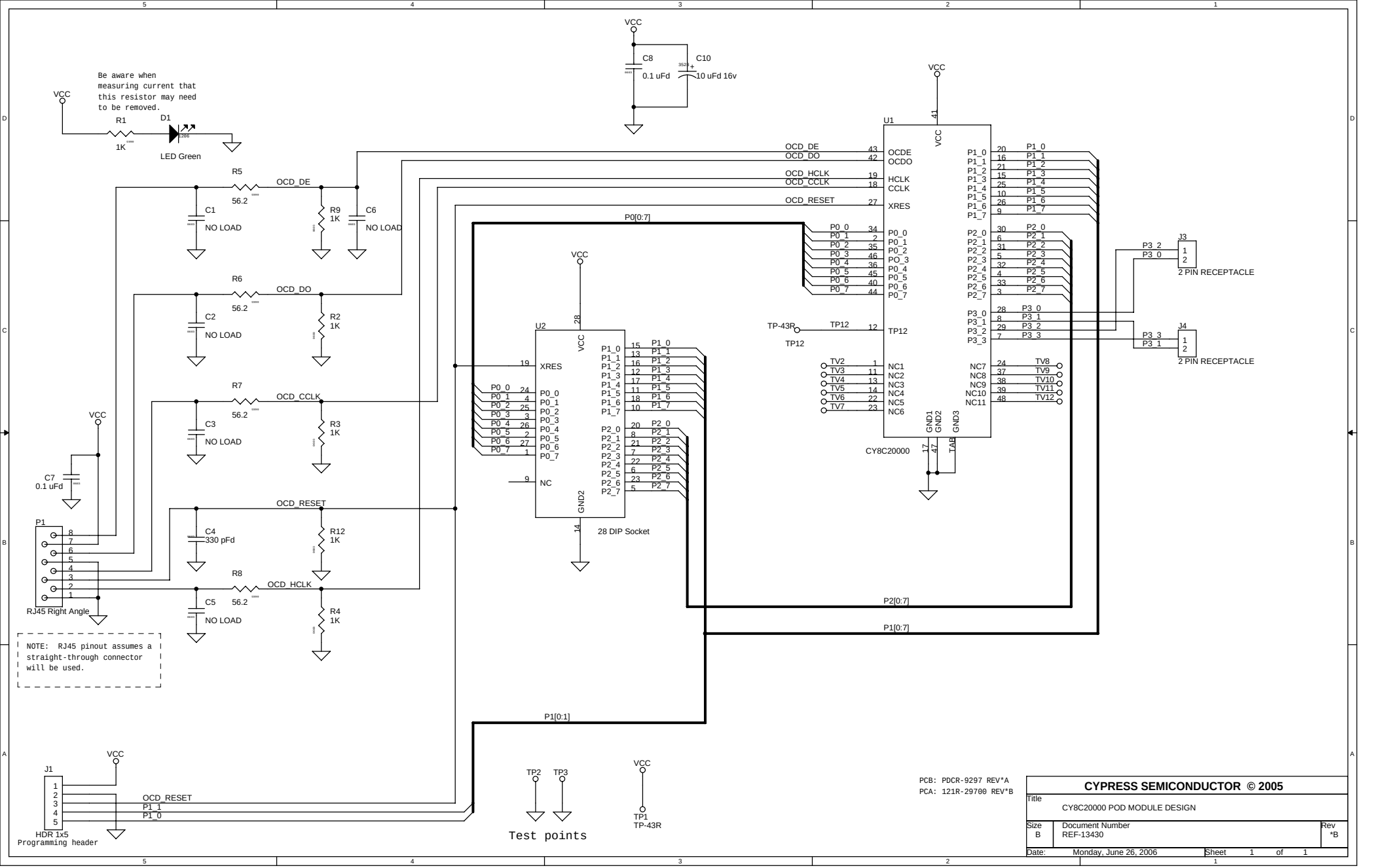

Be aware when measuring current that this resistor may need to be removed.
VCC
R1
1K
D1
LED Green
C8
0.1 uFd
C10
10 uFd 16v
U1
CY8C20000
OCDE
OCDO
HCLK
CCLK
XRES
TP12
NC1
NC2
NC3
NC4
NC5
NC6
NC7
NC8
NC9
NC10
NC11
GND1
GND2
GND3
TAB
OCD_DE
OCD_DO
OCD_HCLK
OCD_CCLK
OCD_RESET
P0[0:7]
P2[0:7]
P1[0:7]
P1[0:1]
TP-43R
TP12
J3
J4
2 PIN RECEPTACLE
U2
28 DIP Socket
XRES
NC
GND2
R5
56.2
C1
NO LOAD
R9
1K
C6
NO LOAD
R6
56.2
C2
NO LOAD
R2
1K
R7
56.2
C3
NO LOAD
R3
1K
C7
0.1 uFd
P1
RJ45 Right Angle
C4
330 pFd
R12
1K
R8
56.2
C5
NO LOAD
R4
1K
NOTE: RJ45 pinout assumes a straight-through connector will be used.
J1
HDR 1x5
Programming header
OCD_RESET
P1_1
P1_0
TP2
TP3
Test points
TP1
TP-43R
PCB: PDCR-9297 REV*A
PCA: 121R-29700 REV*B
CYPRESS SEMICONDUCTOR © 2005
Title
CY8C20000 POD MODULE DESIGN
Size
B
Document Number
REF-13430
Rev
*B
Date: Monday, June 26, 2006
Sheet 1 of 1