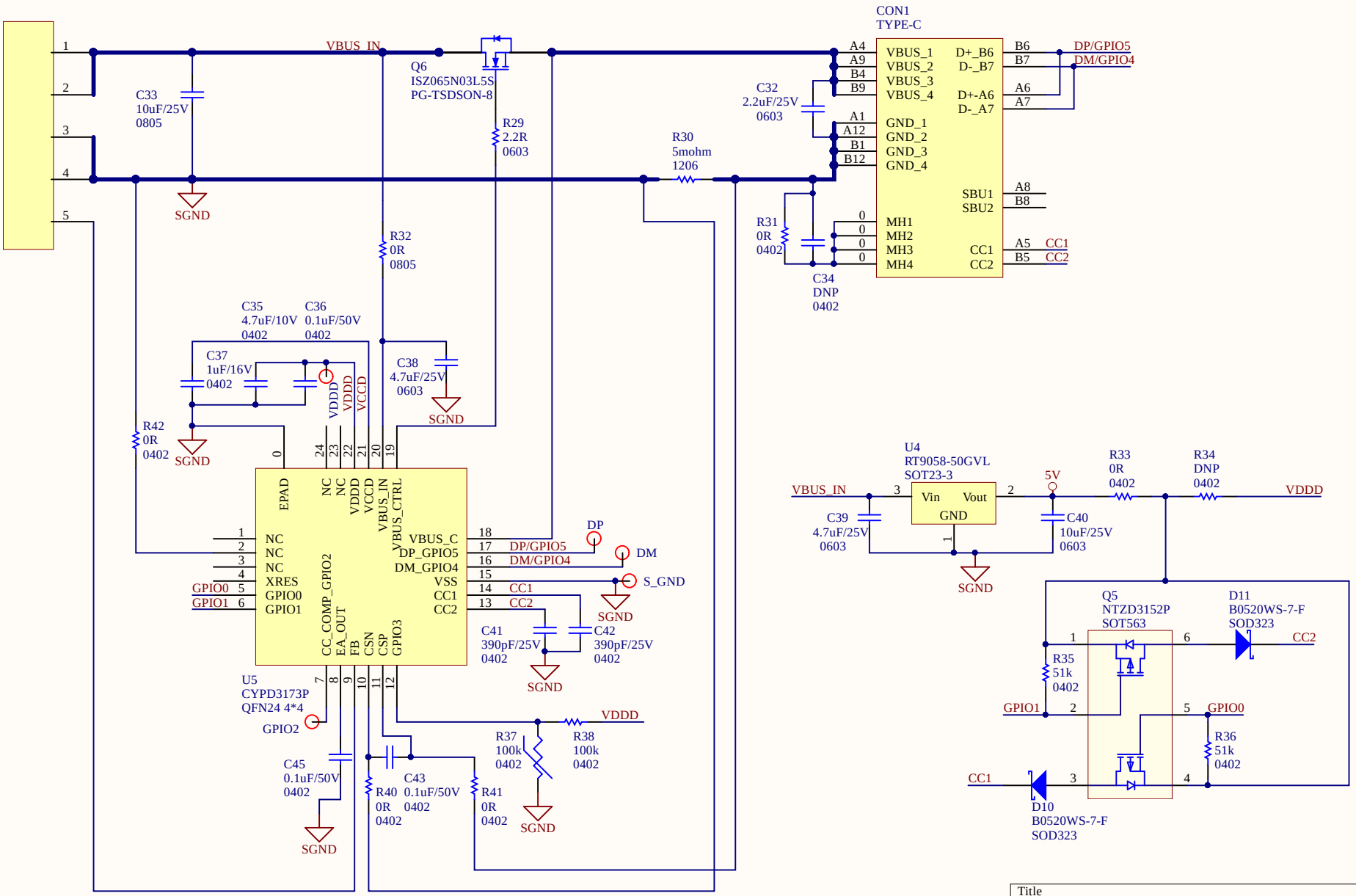

Title		
Size A4	Number	Revision
Date: 2020/9/15		Sheet of
File: E:\Projects\..\Direct FB_CCG3PA NFET Daughter Board V01.SchDoc		Drawn By: