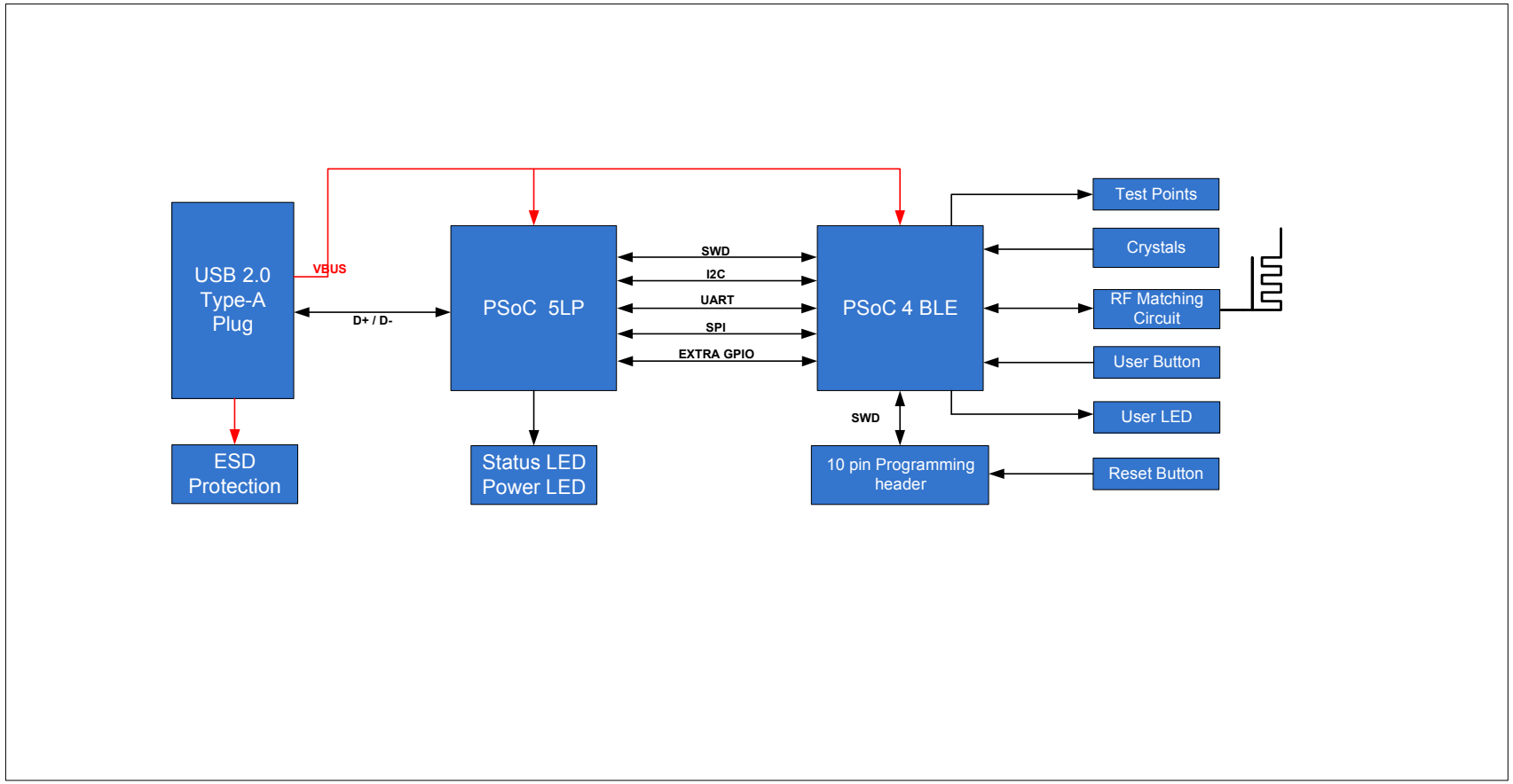

PCA: 121-60303-01
PCB: 600-60326-01
FAB DRW: 610-60300-01
ASSY DRW: 620-60308-01

CYPRESS SEMICONDUCTOR © 2016		
Title: CY5677 CySmart BLE 4.2 USB Dongle		
Size: B	Document Number: 630-60306-01	Rev: 02
Date: Thursday, October 26, 2017	Sheet 1 of 3	

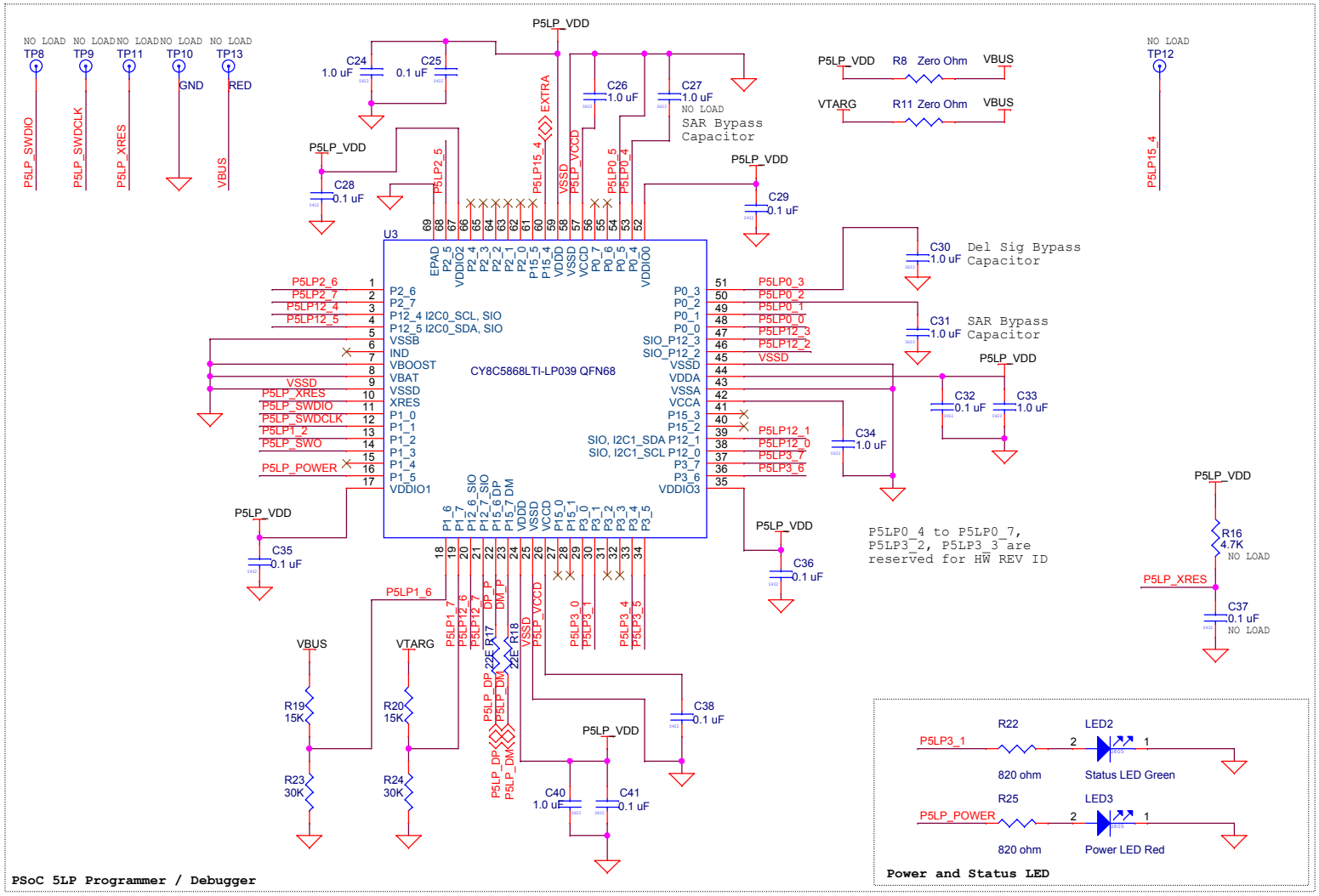

PCA: 121-60303-01
PCB: 600-60326-01
FAB DRW: 610-60300-01
ASSY DRW: 620-60308-01

CYPRESS SEMICONDUCTOR © 2016

Title	CY5677 CySmart BLE 4.2 USB Dongle	
Size B	Document Number 630-60306-01	Rev 02
Date: Thursday, October 26, 2017	Sheet 2 of 3	

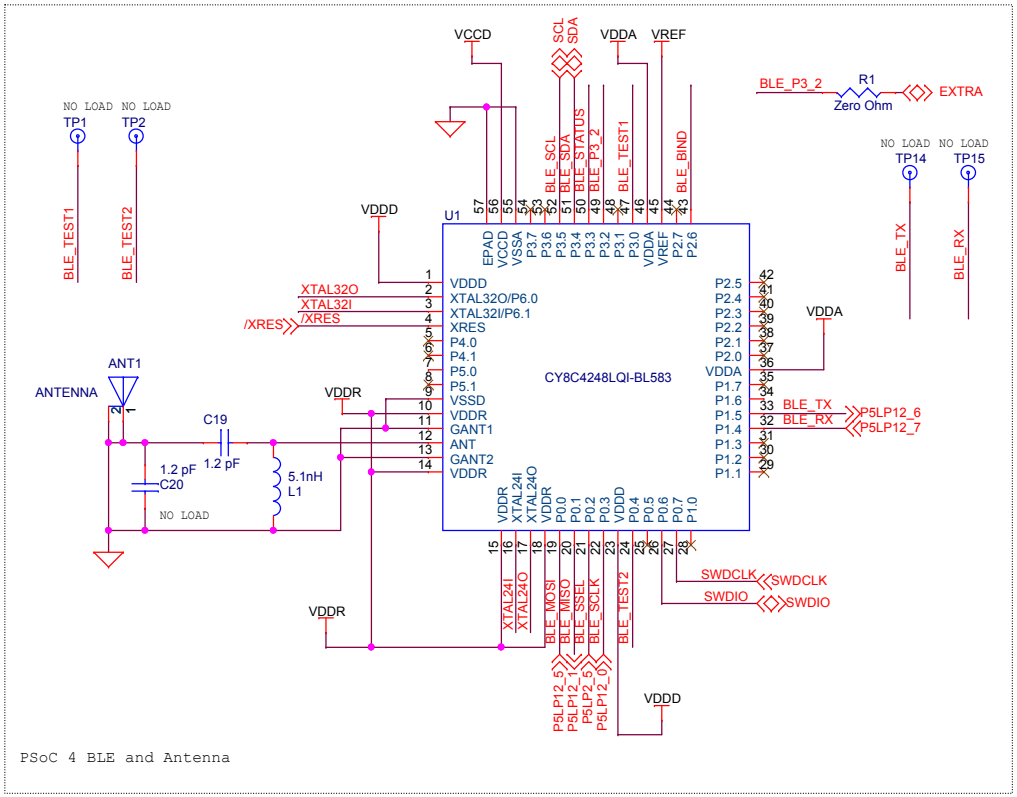

PSoC 4 BLE and Antenna

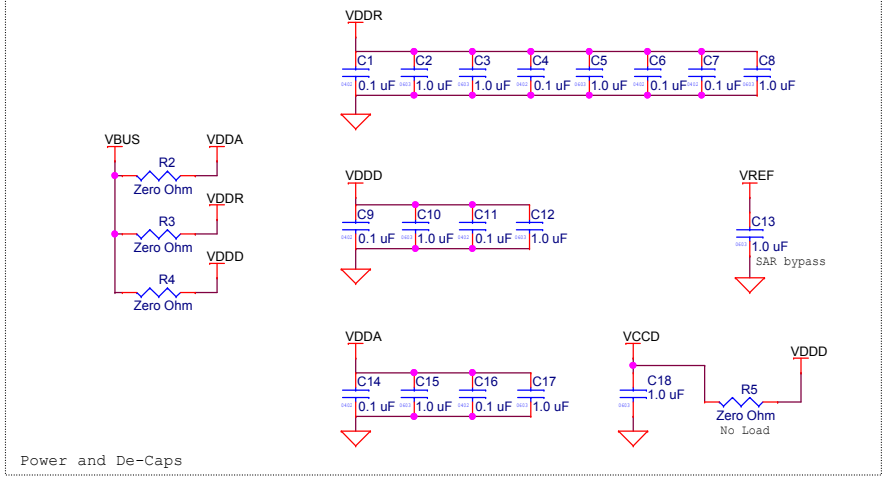

Power and De-Caps

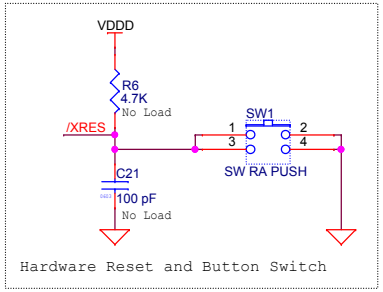

Hardware Reset and Button Switch

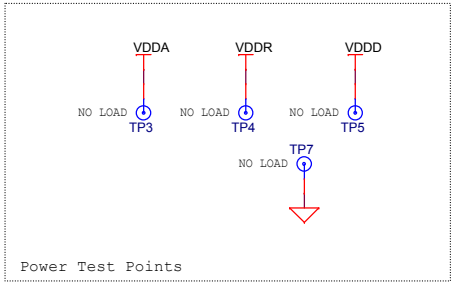

Power Test Points

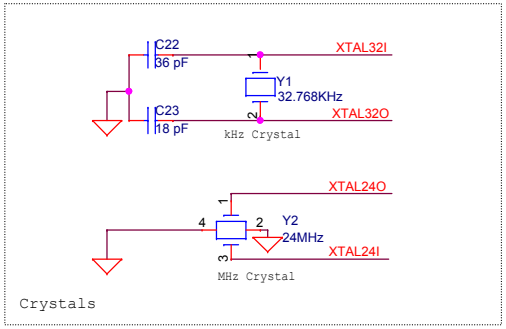

Crystals

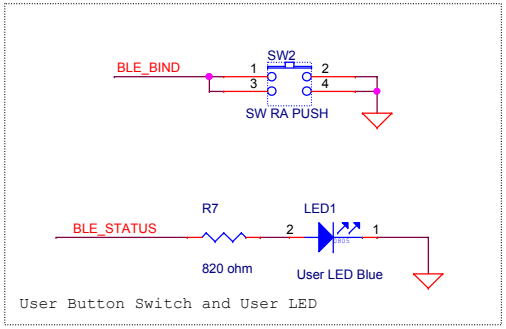

User Button Switch and User LED

PCA: 121-60303-01
PCB: 600-60326-01
FAB DRW: 610-60300-01
ASSY DRW: 620-60308-01

CYPRESS SEMICONDUCTOR © 2016		
Title: CY5677 CySmart BLE 4.2 USB Dongle		
Size: B	Document Number: 630-60306-01	Rev: 02
Date: Thursday, October 26, 2017	Sheet 3 of 3	