WHITEPAPER

Infineon's EZ-USB™ FX2G3 – Advancing USB 2.0 for Thermal Imaging & Beyond

EZ-USB™ FX2G3 family tackles the challenges of modern technology by enhancing USB 2.0 performance, providing a solution that meets the evolving demands of the industry.

Abstract

Infineon's EZ-USB™ FX2G3 is a family of USB 2.0 device controllers designed to improve traditional USB 2.0 technology by delivering faster data transfer speeds, enhanced security features, and greater energy efficiency. With its advanced features, the FX2G3 serves as a bridge between USB-connected devices and the systems that process the data they collect. It is designed to support a variety of real-time imaging systems, including biometric scanners, cameras, thermal imaging devices, mobile & tablet add-ons, and so-on all while ensuring secure data handling and power consumption in check.

In this paper, we will explore how the EZ-USB™ FX2G3 family is changing the way industries approach USB technology, highlighting its potential in Thermal imaging, as well as other future applications.

Table of Contents

1 Overview of EZ-USB™ FX2G3 Family 3

2 Infineon's Breakthrough in Thermal Camera Application 3

2.1 Why is Thermal Imaging Important? 3

2.2 How EZ-USB™ FX2G3 Enhances Thermal Cameras? 4

2.2.1 GPIF III for High-Speed Parallel Data Transfer 4

2.2.2 Adaptive Power Management 5

2.2.3 Dual-Core Processor for Real-time Data Processing 5

2.2.4 Cryptographic Accelerator for Secure Data Processing 5

2.2.5 Direct Memory Access (DMA) for Data Handling 6

2.2.6 USB Video Class (UVC) Compliance for Seamless Connectivity 6

2.2.7 LVCMOS Interface for Direct Sensor Integration 7

2.2.8 SPI Interface for Connecting Thermal Imagers 7

2.3 How EZ-USB™ FX2G3 Works in Thermal Camera Add-on? 7

3 Applications and Future Possibilities of EZ-USB™ FX2G3 9

3.1 Biometrics 9

3.2 Scanners 9

3.3 Test, Measurement, and Mobile Accessories 9

3.4 Other Future Applications 9

4 Conclusion 10

1 Overview of EZ-USB™ FX2G3 Family

While USB standards have evolved, USB 2.0 remains widely used in embedded and industrial applications due to its low power consumption, cost-effectiveness, and broad compatibility. It is ideal for battery-powered devices like portable medical scanners and wearables, offering enough speed (480 Mbps) without the higher power demands and complexity of newer standards. Its low cost makes it suitable for systems that don't need extreme bandwidth, and its compatibility with both modern and legacy systems ensures easy integration without extra drivers or hardware changes—perfect for tools like USB add-ons, testing equipment, and debuggers.

Building on USB 2.0's continued relevance, Infineon's EZ-USB™ FX2G3 is a big step forward compared to its predecessor, the FX2LP. While FX2LP had set the standard for USB 2.0 device controllers, FX2G3 takes it further with more processing power, better memory capacity, improved data handling, and increased security features.

The FX2G3 is built on the MXS40-LP platform and uses advanced Cortex®-M4 and Cortex®-M0+ microcontrollers. It offers **512 KB** of Flash, **128 KB** of SRAM, and **128 KB** of ROM, and an additional **1024 KB** of SRAM for data buffering, which helps it manage large data streams without slowing down. Additionally, it supports USB 2.0 speeds up to **480 Mbps**, just like the FX2LP. It also includes a built-in **crypto engine** to ensure that data is protected during transfer.

The device supports multiple communication protocols— I2C, SPI, UART—along with Quad SPI to accelerate external memory access. Additionally, the FX2G3 offers improved energy efficiency, making it well-suited for battery-powered applications.

Further Reading: Looking to get started on FX2G3? Check this Guide: EZ-USB™ FX2G3 Getting Started

2 Infineon's Breakthrough in Thermal Camera Application

2.1 Why is Thermal Imaging Important?

Thermal imaging technology captures infrared radiation to create temperature-based images. This makes it highly valuable across industrial, medical, security, and consumer applications.

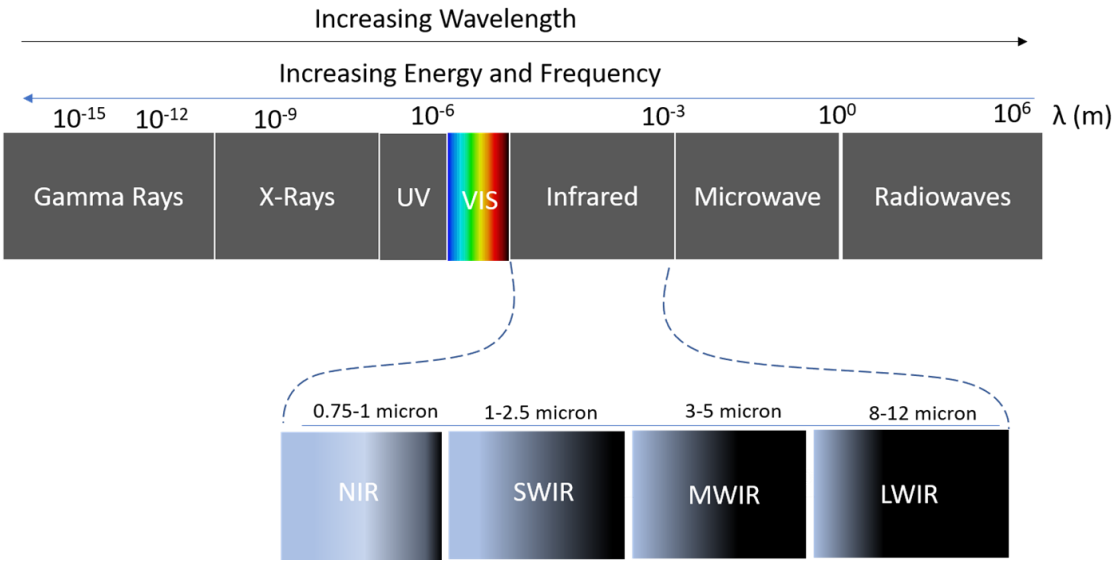

Fig.1: Thermal Imaging Color Spectrum. Image Credit: Omega Optical

In industrial environments, thermal cameras support predictive maintenance by identifying overheating components before failure, improving operational safety, and reducing unplanned downtime. In the medical field, thermal imaging enables fast, contactless temperature screening—ideal for infection control and mass health checks. For security, thermal cameras provide visibility in total darkness, enhancing perimeter surveillance, detecting unauthorized movement and night-time monitoring.

Consumer interest is also growing. Compact thermal cameras that connect to mobile phones via USB make this technology more accessible. These add-ons allow users to inspect home insulation, detect electrical faults, or monitor pet health. As the technology becomes smaller and more affordable, thermal imaging continues to expand into new fields, offering critical insights with minimal complexity.

2.2 How EZ-USB™ FX2G3 Enhances Thermal Cameras?

Below are the key technologies integrated into the FX2G3 that optimize its performance for thermal camera applications:

2.2.1 GPIF III for High-Speed Parallel Data Transfer

The FX2G3 incorporates the General Programmable Interface (GPIF III), a flexible parallel data interface capable of handling high-speed data transfers. The GPIF III supports up to 16 data lines, one clock, and 10 control signals, enabling seamless connection to thermal cameras with a parallel interface. The interface operates at up to 100 MHz in both transmit (TX) and receive (RX) modes, offering high throughput with low latency. The GPIF III's parallel data bus also supports a variety of data configurations, making it highly adaptable to integration with different sensor types.

2.2.2 Adaptive Power Management

The FX2G3 is optimized for low-power operation, an essential feature for thermal cameras that often rely on battery power in mobile or field environments. The device operates within a voltage range of 1.7V to 3.6V, making it suitable for a wide range of power sources.

In addition, the FX2G3 supports deep sleep modes that allow it to conserve power while retaining critical data in SRAM. This feature is particularly beneficial in applications where the camera is required to be in standby mode for extended periods without sacrificing the ability to quickly resume operation, especially in handheld devices.

2.2.3 Dual-Core Processor for Real-time Data Processing

High-end thermal imaging systems require on-device processing to reduce host-side workloads and latency. FX2G3's dual-core architecture - ARM® Cortex®-M4 (150 MHz) and Cortex®-M0+ (100 MHz), allows parallel processing of both computationally intensive tasks and background tasks.

2.2.4 Cryptographic Accelerator for Secure Data Processing

The FX2G3 is equipped with a cryptographic accelerator, providing hardware acceleration for both symmetric and asymmetric cryptographic methods, as well as hash functions. This ensures that all data transmitted from the thermal camera is securely encrypted, protecting sensitive thermal data during transfer or storage.

The hardware-accelerated encryption engine supports industry-standard algorithms such as AES (Advanced Encryption Standard), RSA (Rivest-Shamir-Adleman), and SHA (Secure Hash Algorithm), delivering fast encryption/decryption without compromising performance. Additionally, the FX2G3 includes a true random number generator (TRNG) which enhances the system's security by generating random numbers for cryptographic processes.

In addition to these standard cryptographic features, the FX2G3 also supports Message Authentication Codes (MAC). These codes are critical for verifying the integrity and authenticity of messages transmitted over insecure channels.

The FX2G3 supports two key MAC algorithms to ensure data integrity and authenticity:

- **Hashed Message Authentication Code (HMAC):** Combines a cryptographic hash function and a secret key to verify that the message has not been altered and comes from a trusted source.
- **Cipher-based Message Authentication Code (CMAC):** Uses a block cipher like AES to generate an authentication tag, confirming the message's integrity and origin.

2.2.5 Direct Memory Access (DMA) for Data Handling

The FX2G3 features a High-Bandwidth Direct Memory Access (HB-DMA) controller that improves data transfer efficiency by reducing the CPU's involvement. It supports multiple simultaneous data streams and offers a maximum throughput of 480 Mbps. The 1024KB SRAM buffer ensures seamless data streaming, ensuring fast and smooth data handling, ideal for applications like thermal imaging.

Once configured by the CPU, the DMA operates autonomously. It can transfer video data from the LVCMOS interface to the USB device without requiring further CPU intervention. Additionally, it automatically adds headers and footers to each data packet and can wrap USB packets for seamless data communication.

By offloading these tasks to the DMA, the CPU is freed up to focus on more critical functions, such as thermal image processing or communications.

2.2.6 USB Video Class (UVC) Compliance for Seamless Connectivity

The FX2G3 supports USB Video Class (UVC) compliance, which allows for plug-and-play integration with a variety of host systems, including PCs, embedded systems, and video streaming devices.

UVC is an industry-standard protocol for video streaming over USB, and its support ensures that the thermal camera can transmit real-time video data (in this case, thermal images) to any device that supports the UVC protocol.

The FX2G3 supports up to 32 USB endpoints, including bulk, isochronous, and interrupt types, allowing for flexible and efficient data transfer, crucial for high-quality thermal imaging applications.

2.2.7 LVCMOS Interface for Direct Sensor Integration

The FX2G3 features an LVCMOS interface that provides direct connectivity to sensors used in thermal cameras. This interface supports parallel data transmission, reducing the complexity of external circuitry and improving signal integrity. The LVCMOS interface is configured to work with a variety of sensors, such as focal plane arrays (FPAs), infrared detectors or RGB sensor.

By directly connecting the sensor to the FX2G3, the need for additional interface chips or signal conditioning circuitry is minimized, reducing cost and simplifying the design.

2.2.8 SPI Interface for Connecting Thermal Imagers

The FX2G3 features **two SPI interfaces** for connecting thermal imagers, offering high-speed, full-duplex data transfer. This interface enables seamless communication between the FX2G3 and thermal sensors, facilitating the rapid transfer of raw thermal data for real-time processing. With **Quad SPI** support, the FX2G3 can handle

faster data rates, ensuring efficient data flow from the imager to the processor. This is crucial for applications that require quick data acquisition and minimal latency.

The SPI interface complements the **LVCMOS interface**, providing a flexible and scalable solution for integrating thermal imagers and other peripheral devices. Together, these interfaces ensure high-bandwidth connectivity and support for efficient, low-latency thermal image processing.

2.3 How EZ-USB™ FX2G3 Works in Thermal Camera Add-on?

The integration of EZ-USB™ FX2G3 in a thermal imaging application enables an effective and cost-efficient solution for USB add-on cameras. With the growing demand for thermal imaging in mobile and PC peripherals, leveraging an advanced yet economical architecture can provide users with enhanced functionality at competitive pricing.

The solution focuses on dual-sensor designs, combining a thermal imager with an RGB sensor for higher-resolution thermal imaging, blending the thermal and visual spectrum to provide accurate thermal data overlaid on a visible light background.

The thermal imager captures infrared data to identify temperature variations, while the RGB sensor provides a higher-resolution visual backdrop to contextualize the thermal information. Any thermal imager with I2C, SPI or parallel interface can be directly interfaced with FX2G3. For example, Meridian Innovation's low-cost thermal imagers can be interfaced with FX2G3 using SPI interface for the USB Thermal imager mobile phone add-on application.

The second imaging component here, RGB camera, features an integrated Image Signal Processor (ISP). The ISP handles critical tasks like color correction, white balance, and noise reduction directly on the sensor, significantly simplifying the system design.

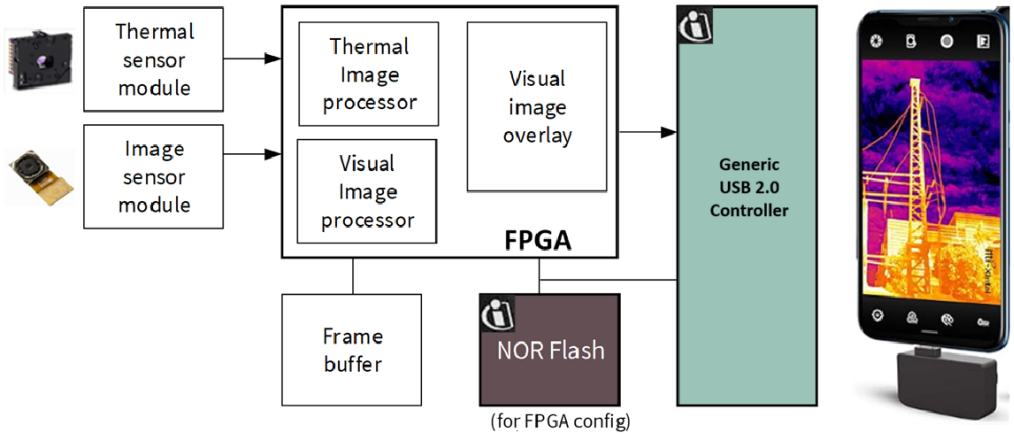

Fig.2: Deploying Thermal Imaging using Generic USB 2.0 Controller. Image Credit: Infineon

For advanced camera solutions requiring significant image processing, the ISP must be implemented using an external ISP controller or FPGA. In contrast, for cost-sensitive thermal camera applications, one of the cores in FX2G3's dual-core system (M0+/M4) can be programmed with a firmware-based ISP library. This approach removes the need for an external controller or FPGA, reducing both component costs and design complexity. Utilizing the built-in ISP functionality ensures competitive image quality while optimizing the bill of materials (BOM) cost.

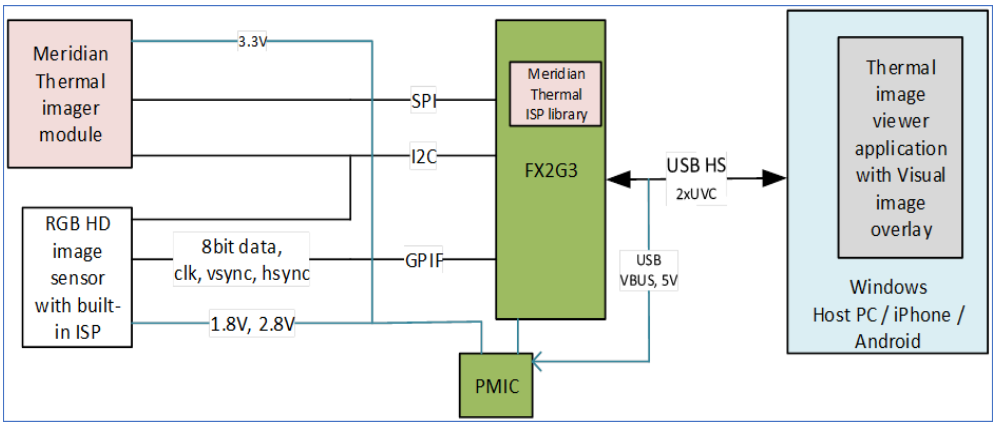

Fig.3: EZ-USB™ FX2G3-based Thermal Imaging Solution with Integrated ISP. Image Credit: Infineon

The FX2G3 enables simultaneous transmission of thermal and RGB video streams to the host via USB High Speed interface. This allows a custom application on the host device to perform advanced processing such as thermal-to-visual overlay, temperature-based color mapping, image fusion, and contextual image enhancement. These capabilities are essential for applications ranging from industrial diagnostics to personal safety and outdoor exploration.

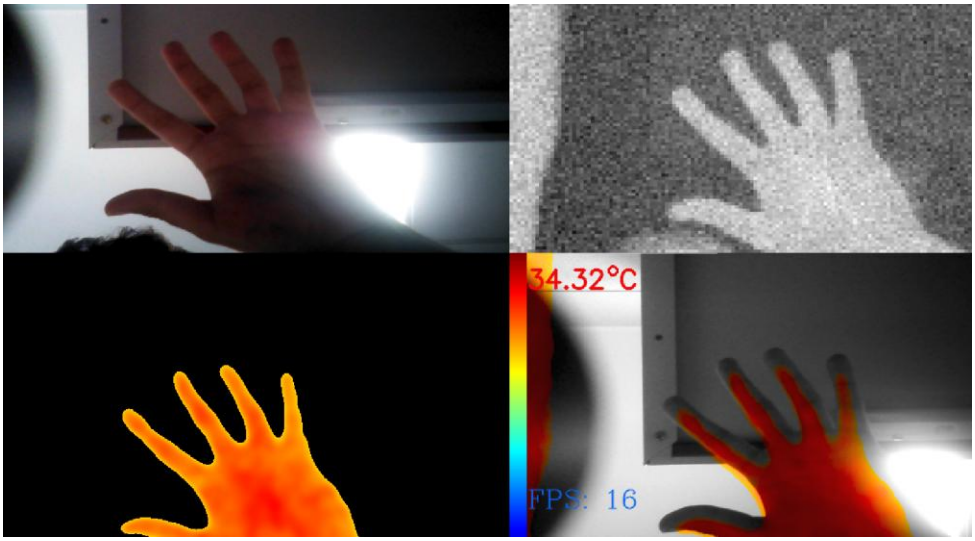

Fig.4: Snapshot of Live Output from EZ-USB™ FX2G3 Thermal module. Image Credit: Infineon

Figure 5 presents a table that provides an approximate estimation of the data throughput for the sensors under discussion. The individual data throughputs are expressed in bits per second (bps) and are calculated using the formula:

Data Throughput = Horizontal Resolution × Vertical Resolution × Color Depth × Frame Rate

For the sensors used in our analysis (RGB + Meridian's Thermal), the combined data rate was calculated to be 298 Mbps, which is well within the 480 Mbps bandwidth limit of the EZ-USB™ FX2G3 interface.

Parameter	Unit	RGB Sensor	Thermal Sensor
Horizontal Resolution	pixels	1280	160
Vertical Resolution	pixels	720	124
Colour Depth	bits	16	16
Frame Rate	fps	20	10
Throughput	bps	294,912,000	3,174,400
Total Throughput		298 Mbps	

Fig.5: Data Throughput Calculation for RGB and Thermal Sensors. Image Credit: Infineon

3 Applications and Future Possibilities of EZ-USB™ FX2G3

The EZ-USB™ FX2G3 plays a vital role in several industries by offering fast, secure, and efficient data transfer, enabling high-performance applications across various sectors.

3.1 Biometrics

In biometrics, such as fingerprint or facial recognition systems, the FX2G3 helps process data quickly for accurate identification. Its low latency ensures real-time data processing, which is crucial in security systems where quick access control decisions are needed. The onboard Crypto accelerator ensures secure data handling, with Cortex®-M4/M0+ for efficient processing of biometric data.

3.2 Scanners

For scanners, whether used for documents, barcodes, or images, the FX2G3 improves operational efficiency by processing scanned data quickly. This minimizes delays between capturing the image and processing it, ensuring smoother workflow in environments like offices and warehouses.

3.3 Test, Measurement, and Mobile Accessories

The FX2G3 powers USB-based tools like logic analyzers, oscilloscopes, DAQs, and JTAG debuggers, enabling real-time data capture and analysis. It efficiently handles data for mobile USB add-ons—sensors, cameras, adapters—and supports protocol analyzers, making it ideal for USB peripheral development.

3.4 Other Future Applications

One of the exciting possibilities for engineers is the combination of visible and thermal imaging to create **hybrid imaging solutions**. This fusion of imaging modalities opens up new opportunities in applications requiring high-precision data, such as advanced security systems, environmental monitoring, and quality inspection.

Engineers can also explore new areas such as **edge computing**, where the FX2G3 can be used to process data locally on devices, reducing reliance on cloud services and enabling faster, real-time decision-making.

In industrial automation, the FX2G3 can be used to control and process data from motion sensors, vision systems, and actuators. It can integrate with robotic arms for precise control in manufacturing environments or automate processes in warehouses. The processor's multiple I/O interfaces can be connected to a wide range of sensors and actuators. This makes it ideal for machine vision in object recognition and path planning for autonomous robots.

To drive innovation in diverse industries, engineers can leverage **Infineon's Software Development Kits (SDKs)** to create custom applications. By using these tools, engineers can optimize data processing, enhance system integration, and develop high-performance applications. The flexibility and scalability of the SDKs make it easier to adapt to evolving technological needs and rapidly changing market demands.

4 Conclusion

The Infineon EZ-USB™ FX2G3 family represents a significant advancement in USB 2.0 technology, offering enhanced speed, security, and power efficiency. By incorporating powerful features such as the GPIF III for high-speed parallel data transfer, adaptive power management, a cryptographic accelerator, and DMA for efficient data handling, the FX2G3 addresses the needs of industries requiring real-time, secure data transfer. Its application in fields such as biometrics, cameras, scanners, and thermal imaging showcases its versatility, making it an indispensable tool for various industries, including security, medical, and industrial automation.

Looking ahead, the FX2G3 has the potential to drive innovation in fields like edge computing, augmented reality (AR), automotive, industrial automation, and hybrid imaging solutions.

As industries continue to evolve, the FX2G3 provides the foundation for future breakthroughs in secure, efficient, and high-performance data handling.

Published by
Infineon Technologies AG
Am Campeon 1-15, 85579 Neubiberg
Germany

© 2025 Infineon Technologies AG.
All rights reserved.

Public

Version: V1.0_EN
Date: 07/2025

Stay connected!

Scan the QR code and explore the offering
www.infineon.com

Please note!
This Document is for information purposes only, and any information given herein shall in no event be regarded as a warranty, guarantee or description of any functionality, conditions and/or quality of our products or any suitability for a particular purpose. With regard to the technical specifications of our products, we kindly ask you to refer to the relevant product data sheets provided by us. Our customers and their technical departments are required to evaluate the suitability of our products for the intended application.

We reserve the right to change this document and/or the information given herein at any time.

Additional information
For further information on technologies, our products, the application of our products, delivery terms and conditions and/or prices, please contact your nearest Infineon Technologies office (www.infineon.com).

Warnings
Due to technical requirements, our products may contain dangerous substances. For information on the types in question, please contact your nearest Infineon Technologies office.

Except as otherwise explicitly approved by us in a written document signed by authorized representatives of Infineon Technologies, our products may not be used in any life-endangering applications, including but not limited to medical, nuclear, military, life-critical or any other applications where a failure of the product or any consequences of the use thereof can result in personal injury.