Index

Page	Schematics Page Name
01	Cover Sheet / Revision History
02	Block Connections & Diagram
03	MCU
04	Aux.sup.+soft-start
05	Current Sense Amp + OCP
06	Encoder A,B and index+

REF_MTR_48V30A_PSC3_GaN_MCU_brd.schdoc

Revision History

Rev.	Date	Author	Description	Page(s)
1.0	2025-05-31	Chase	Initial Release	
2.0	2025-11-23	Shubhendu	- HW Overcurrent protection - Current Sense Amplier circuit added - Gate Driver Enable signal added - Inductor added to limit the current for Aux supply - TVS diode replacing the Zener - SPI_CS and EN_SS signals interchanged, - PWM_N signals removed - MCU Board to Inverter board connector pin change	
3.0	2025-04-23	Shubhendu	- HW Overcurrent protection added to DC Bus Current - AND Gates changed from 5V to 3.3V supply - Analog GND capacitors moved to aGND - x-capacitor added across GND_SEC and GND - Resistors added to chopper circuit and external connectors replaced by solder pads - Optio to drive AUX supply with new IC LM5169 provided	
4.0	2025-07-15	Shubhendu	- Vbatt disconnet jumper added, along with a test pad.	

REF_MTR_48V30A_PSC3_GaN MCU board

with LM5169

4.0

Infineon Technologies India Pvt Ltd

Bengaluru, India

2025-2026

Infineon-Logo

Infineon-Logo

GaN - Motor Control Application

Link to Top Level Document

02 Top Level
block connection and connectors.SchDoc

LEGAL DISCLAIMER
THE INFORMATION GIVEN IN THIS DOCUMENT IS GIVEN FOR ILLUSTRATING PURPOSES ONLY. THE RECIPIENT OF THIS DOCUMENT MUST VERIFY ANY FUNCTION DESCRIBED HEREIN IN THE REAL APPLICATION. INFINEON TECHNOLOGIES HEREBY DISCLAIMS ANY AND ALL WARRANTIES AND LIABILITIES OF ANY KIND (INCLUDING WITHOUT LIMITATION WARRANTIES OF NON-INFRINGEMENT OF INTELLECTUAL PROPERTY RIGHTS OF ANY THIRD PARTY) WITH RESPECT TO ANY AND ALL INFORMATION GIVEN IN THIS DOCUMENT.

Infineon Technologies India Pvt Ltd
Bengaluru, India
Bagmane Tech Park

Title	REF_MTR_48V30A_PSC3_GaN MCU board		
Variant	with LM5169	Approved	<Appr.>
Size: A3	Document Name: REF_MTR_48V30A_PSC3_GaN_MCU_brd.schdoc	Rel. 4.0	Rev. 4.0

Author: Shubhendu Sitoke
Date: 23-07-2026 Time: 15:21:14 SVN Revision: Not in version control
Infineon Technologies India Pvt Ltd Sheet 1 of 7

block connection and connectors.SchDoc

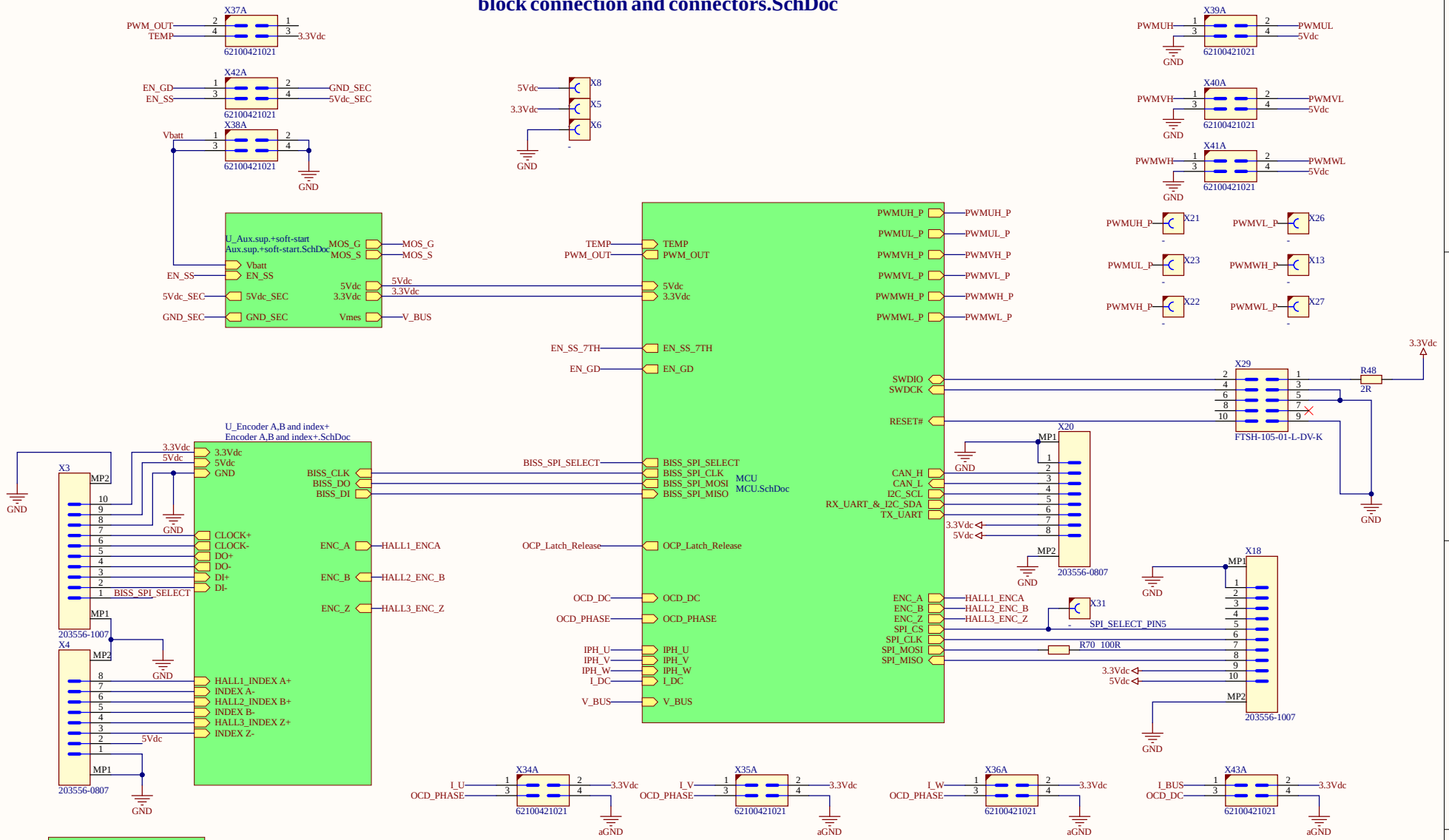

GaN - Motor Control Application

Infineon Technologies India Pvt Ltd Bengaluru, India Bagmane Tech Park			
Title	REF_MTR_48V30A_PSC3_GaN MCU board		
Variant	with LM5169	Approved	*
Size: A3	Document Name: block connection and connectors.SchDoc	Rel. 4.0	Rev. 4.0
Author: Shubhendu Sitoke			
Date: 23-07-2026 Time: 15:21:14	SVN Revision: Not in version control		
Infineon Technologies India Pvt Ltd	Sheet 2 of 7		

MCU.SchDoc

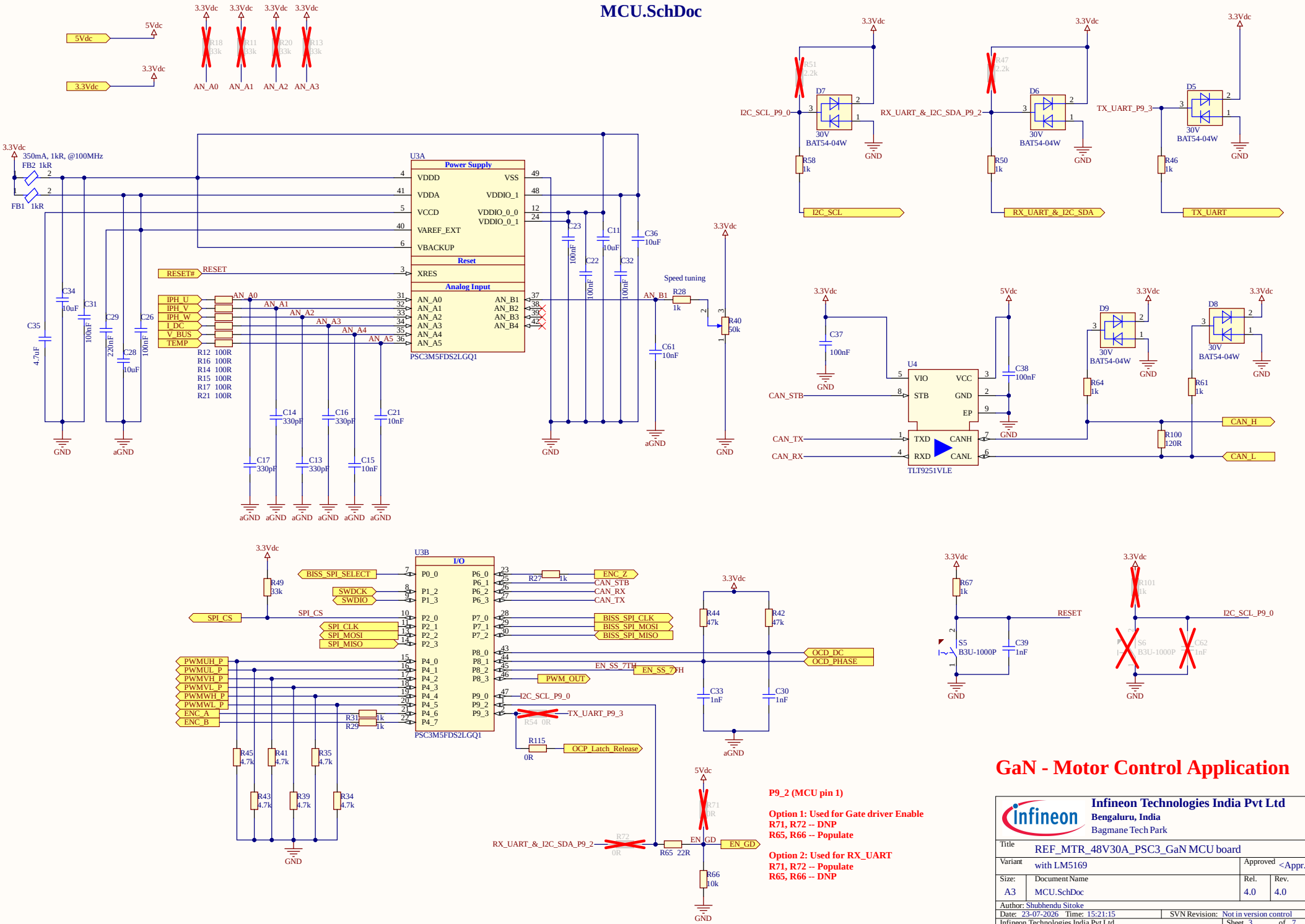

GaN - Motor Control Application

P9_2 (MCU pin 1)

Option 1: Used for Gate driver Enable
R71, R72 -- DNP
R65, R66 -- Populate

Option 2: Used for RX_UART
R71, R72 -- Populate
R65, R66 -- DNP

Infineon Technologies India Pvt Ltd Bengaluru, India Bagmane Tech Park			
Title	REF_MTR_48V30A_PSC3_GaN MCU board		
Variant	with LM5169	Approved	<Appr.>
Size: A3	Document Name: MCU.SchDoc	Rel.: 4.0	Rev.: 4.0
Author: Shubhendu Sitoke			
Date: 23-07-2026 Time: 15:21:15	SVN Revision: Not in version control		
Infineon Technologies India Pvt Ltd	Sheet 3 of 7		

Aux.sup.+soft-start.SchDoc

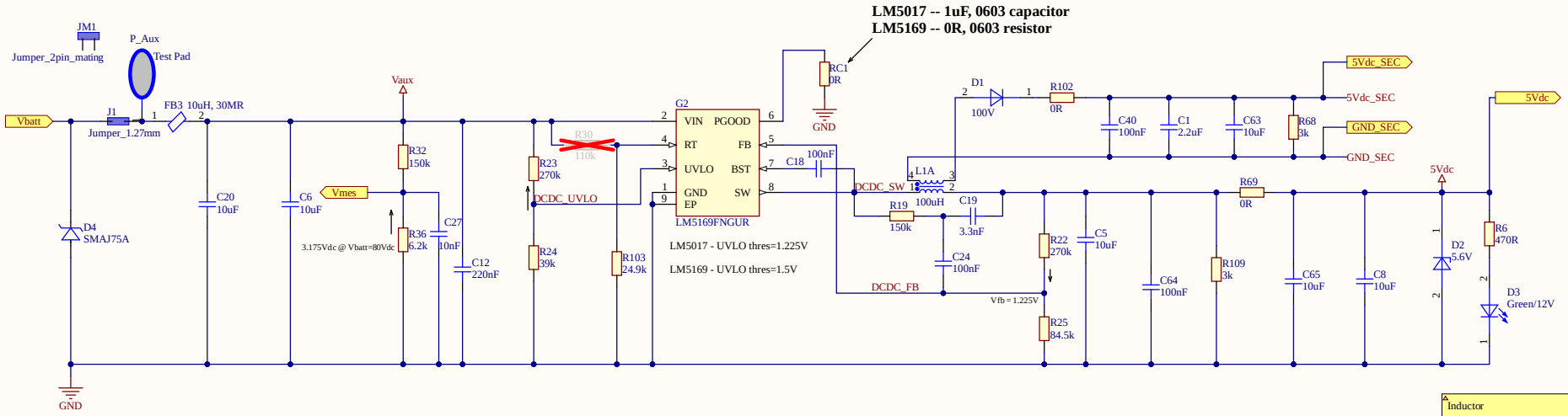

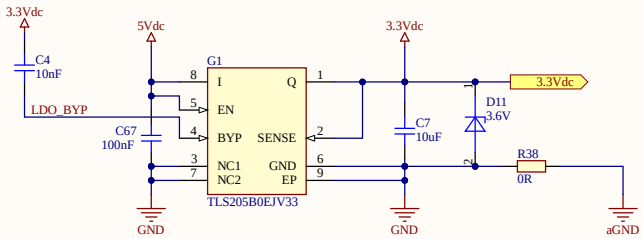

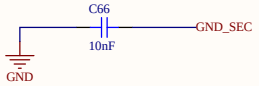

LM5017 DCDC see datasheet

Vout=1.225V*(R29+R26)/R29 = 5V
fsw = Vout/(K*R30) = 500kHz
L1A = ((Vin-Vout)/(di*fsw))*(Vout/Vin) = 300uH

LM5169 DCDC see datasheet

Vout = 1.2V*(R22/R25 +1) = 5V
fsw = Vout*2500/R103 = 500kHz

di = 40mA
L1A = ((Vin-Vout)/(di*fsw))*(Vout/Vin) = 220uH

Inductor

di=30mA
Satutation current-> Isat= 470mA
Related current -> 400mA

TVS
-Reverse stand off -> Vr=82V
-Break down -> Vbd(max)= V

Lipo cell. max value -> 4.2V
x12 -> 50.4 V
x14 -> 58.8 V

Power management:

--> Max current 3,3V LDO
- uC->100mA
- Curr. senor --> 18mA * 4 = 72mA
- CAN3,3v --> 2mA
- receiver3.3v --> 17mA
- driver3.3v --> 2.7mA * 3 = 8.1mA
- NAND Gate --> 100mA
- D-Flip Flop --> 0.51mA
- Amplifier --> 10mA*2 = 20mA
- Temp. sensor --> 15uA
- Itot_3,3v --> 320mA

--> Max current 5V DCDC (eff.=0.85)
- CAN5v --> 48mA
- Gate Driver --> 2.7mA*2 = 5.2mA
- Led --> 20mA
- Itot_5V --> 75mA

--> Itot=395mA (AVG worst)

Iin = 395mA*5V/0.85/48V = 48.3 mA

GaN - Motor Control Application

Infineon Technologies India Pvt Ltd
Bengaluru, India
Bagmane Tech Park

Title	REF_MTR_48V30A_PSC3_GaN MCU board		
Variant	with LM5169	Approved	*
Size: A3	Document Name: Aux.sup.+soft-start.SchDoc	Rel. 4.0	Rev. 4.0
Author: Shubhendu Sitoke			
Date: 23-07-2026 Time: 15:21:15	SVN Revision: Not in version control		
Infineon Technologies India Pvt Ltd	Sheet 4 of 7		

HW OCP.SchDoc

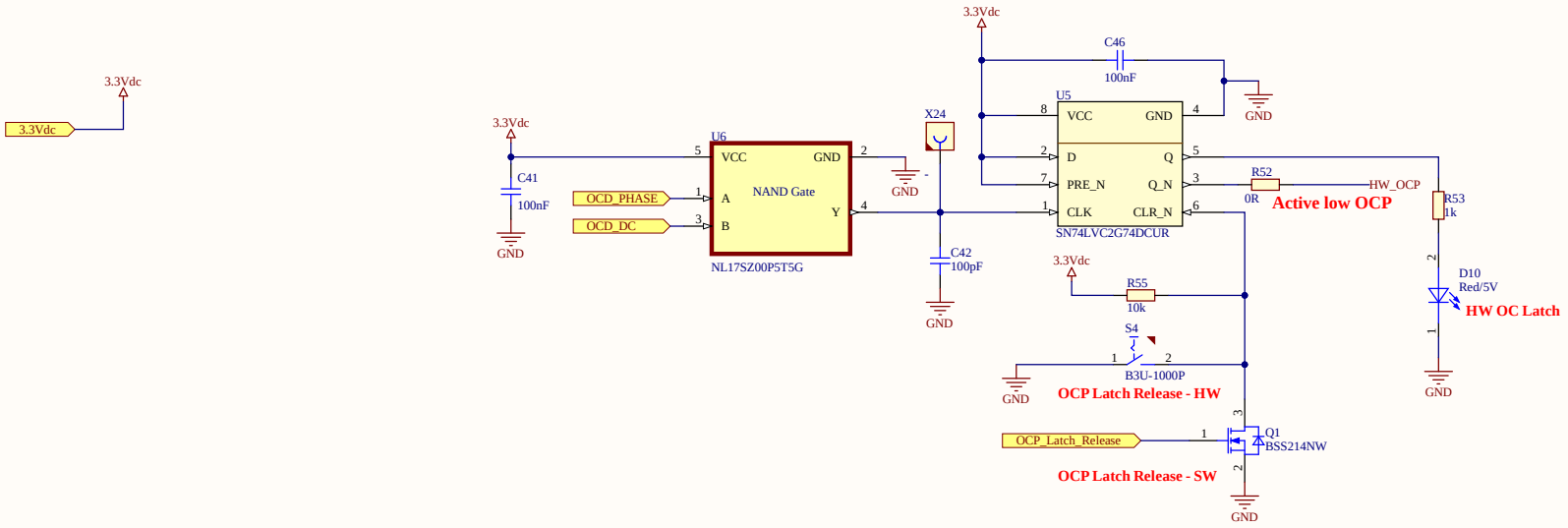

Jumper to Bypass HW OCP

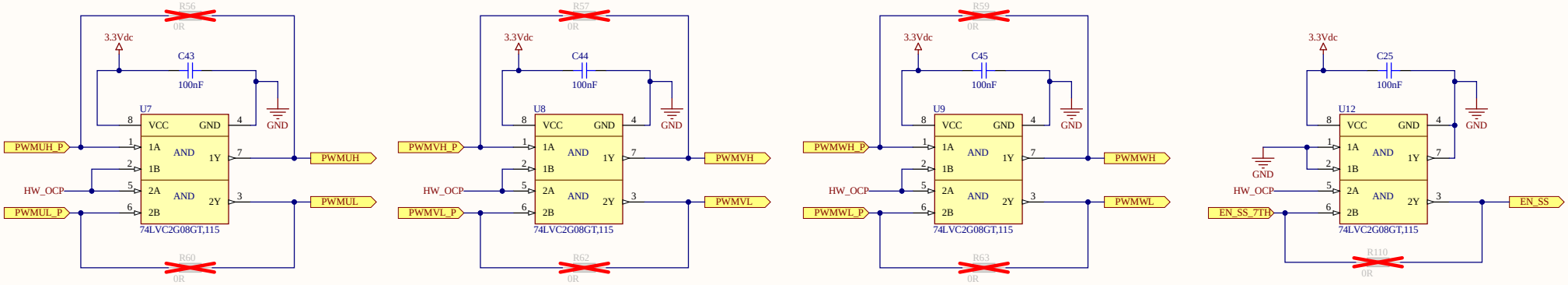

Jumper to Bypass HW OCP

To bypass the HW OCP circuit:
Populate R56, R57, R59, R60, R62, R63, R110

GaN - Motor Control Application

Infineon Technologies India Pvt Ltd Bengaluru, India Bagmane Tech Park			
Title	REF_MTR_48V30A_PSC3_GaN MCU board		
Variant	with LM5169	Approved	*
Size: A3	Document Name: HW OCP.SchDoc	Rel. 4.0	Rev. 4.0
Author: Shubhendu Sitoke			
Date: 23-07-2026 Time: 15:21:15	SVN Revision: Not in version control		
Infineon Technologies India Pvt Ltd	Sheet 5 of 7		

Current Sense Amp.SchDoc

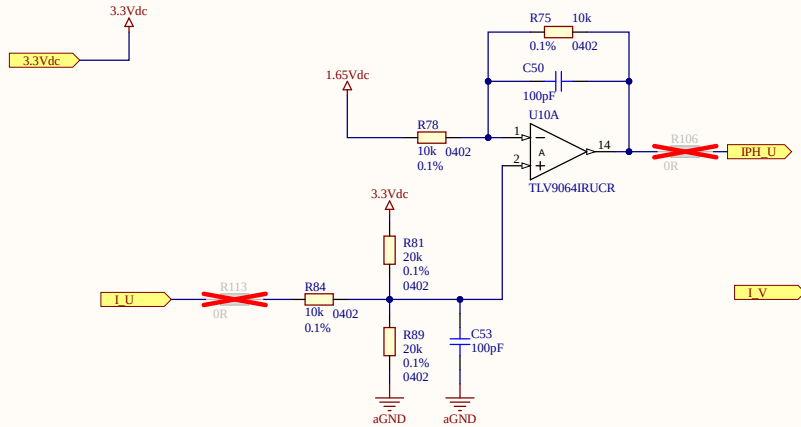

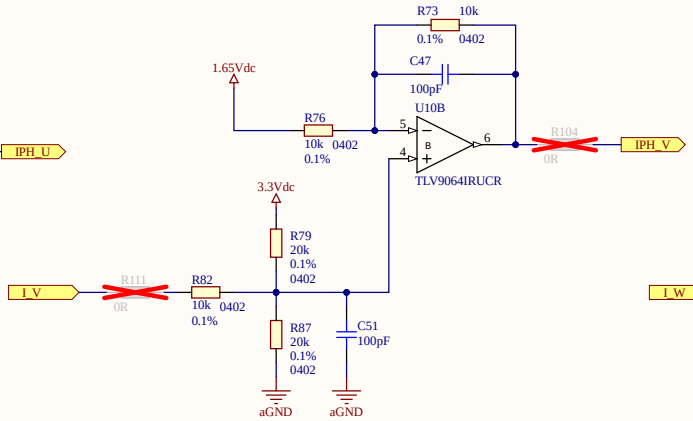

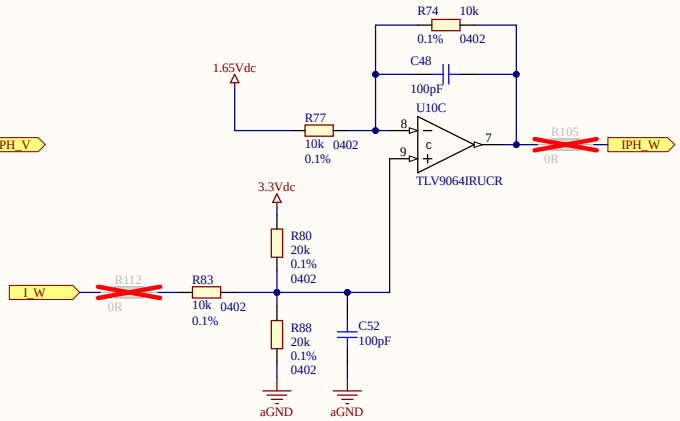

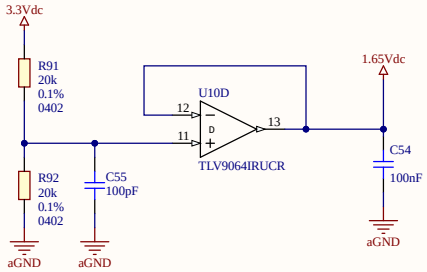

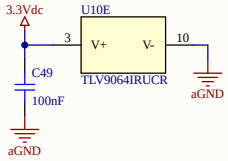

U10 - Phase Current Sense Amplifier - Gain = 1, with 1.65V offset

To Disable the Amplifier, DNP --- R104, R105, R106, R107, R111, R112, R113, R114 Populate --- R85, R86, R90, R94

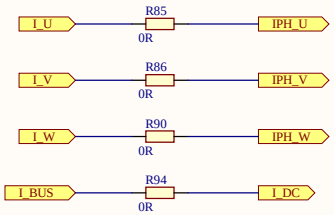

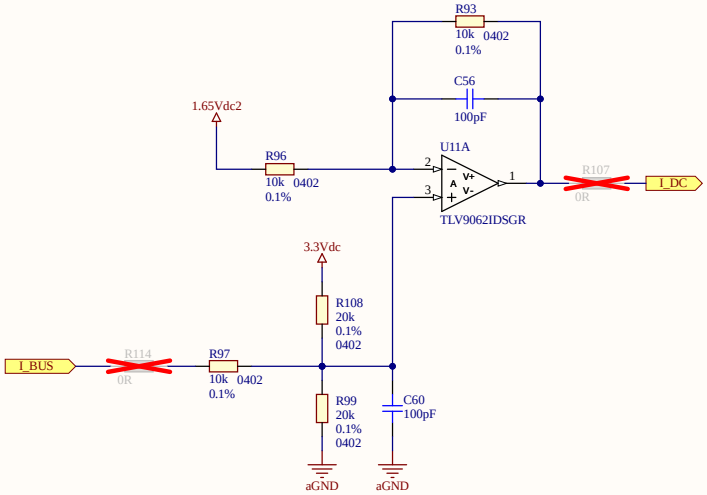

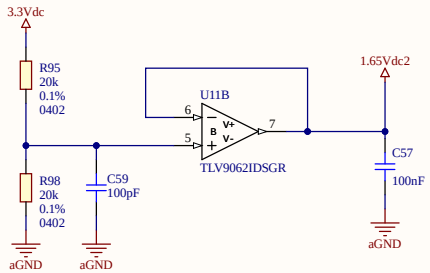

U11 - DC BUS Current Sense Amplifier - Gain = 1, with 1.65V Offest

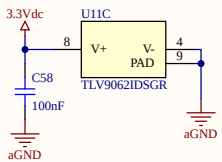

GaN - Motor Control Application

Infineon Technologies India Pvt Ltd Bengaluru, India Bagmane Tech Park			
Title	REF_MTR_48V30A_PSC3_GaN MCU board		
Variant	with LM5169	Approved	*
Size: A3	Document Name: Current Sense Amp.SchDoc	Rel. 4.0	Rev. 4.0
Author: Shubhendu Sitoke			
Date: 23-07-2026 Time: 15:21:15	SVN Revision: Not in version control		
Infineon Technologies India Pvt Ltd	Sheet 6 of 7		

Encoder A,B and index+.SchDoc

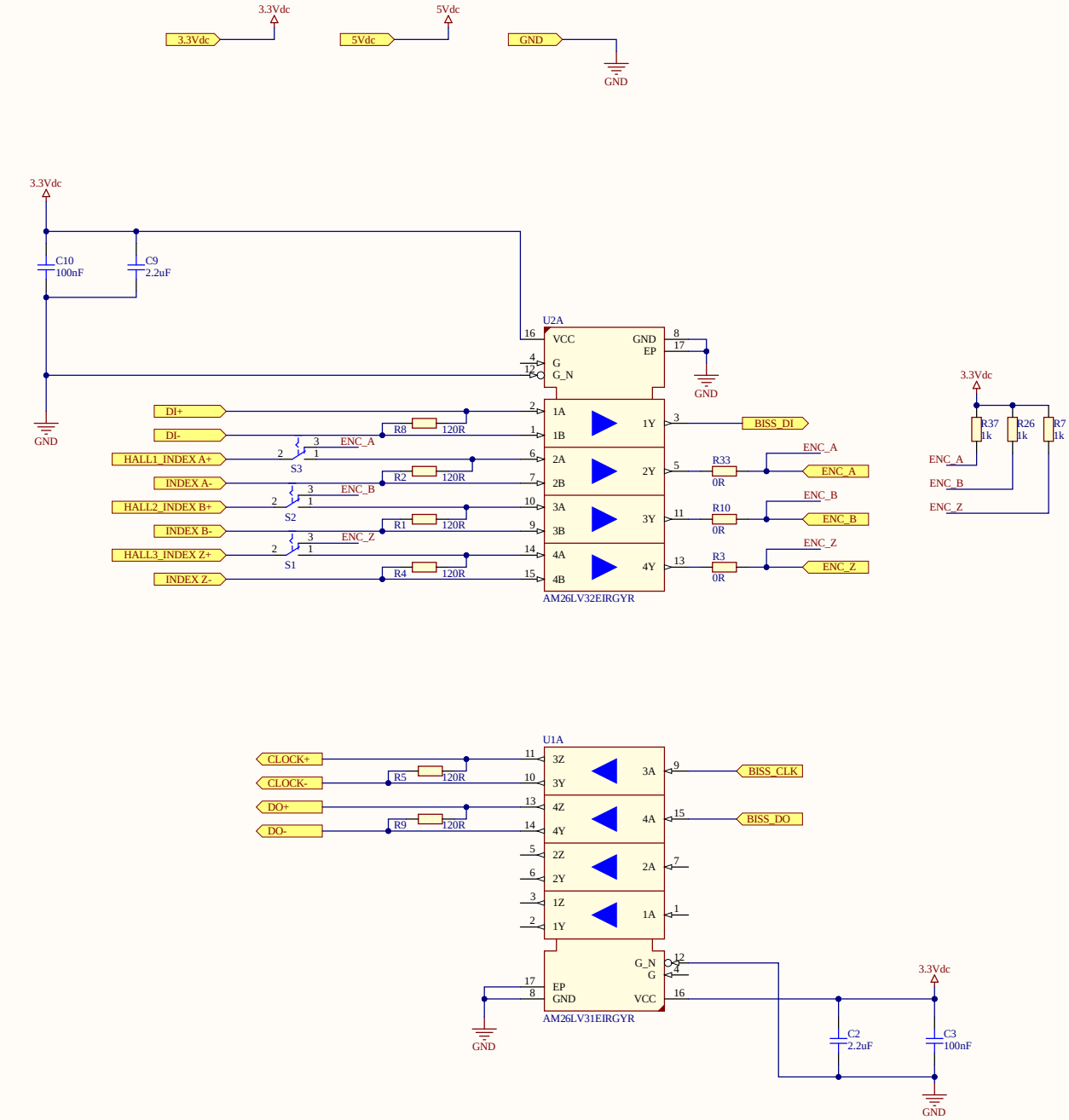

GaN - Motor Control Application

Infineon Technologies India Pvt Ltd Bengaluru, India Bagmane Tech Park			
Title	REF_MTR_48V30A_PSC3_GaN MCU board		
Variant	with LM5169	Approved	<Appr.>
Size: A3	Document Name: Encoder A,B and index+.SchDoc	Rel. 4.0	Rev. 4.0
Author: Shubhendu Sitoke			
Date: 23-07-2026 Time: 15:21:15		SVN Revision: Not in version control	
Infineon Technologies India Pvt Ltd		Sheet 7 of 7	