Please note that Cypress is an Infineon Technologies Company.
The document following this cover page is marked as “Cypress” document as this is the company that originally developed the product. Please note that Infineon will continue to offer the product to new and existing customers as part of the Infineon product portfolio.

Continuity of document content
The fact that Infineon offers the following product as part of the Infineon product portfolio does not lead to any changes to this document. Future revisions will occur when appropriate, and any changes will be set out on the document history page.

Continuity of ordering part numbers
Infineon continues to support existing part numbers. Please continue to use the ordering part numbers listed in the datasheet for ordering.

PSoC 4000S Family

PSoC® 4 Architecture Technical Reference Manual (TRM)

Document No. 002-10129 Rev. *E

July 30, 2024

Cypress Semiconductor
An Infineon Technologies Company
198 Champion Court
San Jose, CA 95134-1709
www.infineon.com

Copyrights

© Cypress Semiconductor Corporation, 2015-2024. This document is the property of Cypress Semiconductor Corporation, an Infineon Technologies company, and its affiliates ("Cypress"). This document, including any software or firmware included or referenced in this document ("Software"), is owned by Cypress under the intellectual property laws and treaties of the United States and other countries worldwide. Cypress reserves all rights under such laws and treaties and does not, except as specifically stated in this paragraph, grant any license under its patents, copyrights, trademarks, or other intellectual property rights. If the Software is not accompanied by a license agreement and you do not otherwise have a written agreement with Cypress governing the use of the Software, then Cypress hereby grants you a personal, non-exclusive, nontransferable license (without the right to sublicense) (1) under its copyright rights in the Software (a) for Software provided in source code form, to modify and reproduce the Software solely for use with Cypress hardware products, only internally within your organization, and (b) to distribute the Software in binary code form externally to end users (either directly or indirectly through resellers and distributors), solely for use on Cypress hardware product units, and (2) under those claims of Cypress's patents that are infringed by the Software (as provided by Cypress, unmodified) to make, use, distribute, and import the Software solely for use with Cypress hardware products. Any other use, reproduction, modification, translation, or compilation of the Software is prohibited.

TO THE EXTENT PERMITTED BY APPLICABLE LAW, CYPRESS MAKES NO WARRANTY OF ANY KIND, EXPRESS OR IMPLIED, WITH REGARD TO THIS DOCUMENT OR ANY SOFTWARE OR ACCOMPANYING HARDWARE, INCLUDING, BUT NOT LIMITED TO, THE IMPLIED WARRANTIES OF MERCHANTABILITY AND FITNESS FOR A PARTICULAR PURPOSE. No computing device can be absolutely secure. Therefore, despite security measures implemented in Cypress hardware or software products, Cypress shall have no liability arising out of any security breach, such as unauthorized access to or use of a Cypress product. CYPRESS DOES NOT REPRESENT, WARRANT, OR GUARANTEE THAT CYPRESS PRODUCTS, OR SYSTEMS CREATED USING CYPRESS PRODUCTS, WILL BE FREE FROM CORRUPTION, ATTACK, VIRUSES, INTERFERENCE, HACKING, DATA LOSS OR THEFT, OR OTHER SECURITY INTRUSION (collectively, "Security Breach"). Cypress disclaims any liability relating to any Security Breach, and you shall and hereby do release Cypress from any claim, damage, or other liability arising from any Security Breach. In addition, the products described in these materials may contain design defects or errors known as errata which may cause the product to deviate from published specifications. To the extent permitted by applicable law, Cypress reserves the right to make changes to this document without further notice. Cypress does not assume any liability arising out of the application or use of any product or circuit described in this document. Any information provided in this document, including any sample design information or programming code, is provided only for reference purposes. It is the responsibility of the user of this document to properly design, program, and test the functionality and safety of any application made of this information and any resulting product. "High-Risk Device" means any device or system whose failure could cause personal injury, death, or property damage. Examples of High-Risk Devices are weapons, nuclear installations, surgical implants, and other medical devices. "Critical Component" means any component of a High-Risk Device whose failure to perform can be reasonably expected to cause, directly or indirectly, the failure of the High-Risk Device, or to affect its safety or effectiveness. Cypress is not liable, in whole or in part, and you shall and hereby do release Cypress from any claim, damage, or other liability arising from any use of a Cypress product as a Critical Component in a High-Risk Device. You shall indemnify and hold Cypress, including its affiliates, and its directors, officers, employees, agents, distributors, and assigns harmless from and against all claims, costs, damages, and expenses, arising out of any claim, including claims for product liability, personal injury or death, or property damage arising from any use of a Cypress product as a Critical Component in a High-Risk Device. Cypress products are not intended or authorized for use as a Critical Component in any High-Risk Device except to the limited extent that (i) Cypress's published data sheet for the product explicitly states Cypress has qualified the product for use in a specific High-Risk Device, or (ii) Cypress has given you advance written authorization to use the product as a Critical Component in the specific High-Risk Device and you have signed a separate indemnification agreement.

Cypress, the Cypress logo, and combinations thereof, PSoC, CapSense, EZ-USB, F-RAM, Traveo, WICED, and ModusToolbox are trademarks or registered trademarks of Cypress or a subsidiary of Cypress in the United States or in other countries. For a more complete list of Cypress trademarks, visit cypress.com. Other names and brands may be claimed as property of their respective owners.

Contents Overview

Section A: Overview **10**

1. Introduction 11
2. Getting Started 15
3. Document Construction 18

Section B: CPU System **21**

4. Cortex-M0+ CPU 22
5. Interrupts 27

Section C: System Resources Subsystem (SRSS) **35**

6. I/O System 36
7. Clocking System 56
8. Power Supply and Monitoring 63
9. Chip Operational Modes 66
10. Power Modes 67
11. Watchdog Timer 71
12. Reset System 74
13. Device Security 76

Section D: Digital System **78**

14. Serial Communications Block (SCB) 79
15. Timer, Counter, and PWM 121

Section E: Analog System **145**

16. Low-Power Comparator 146
17. CapSense 152
18. LCD Direct Drive 153

Section F: Program and Debug **165**

19. Program and Debug Interface 166
20. Nonvolatile Memory Programming 173

Glossary **189**

Contents

Section A: Overview 10

Document Revision History 10

1. Introduction 11

1.1 Top Level Architecture 11
1.2 Features 12
1.3 CPU System 12
1.3.1 Processor 12
1.3.2 Interrupt Controller 12
1.4 Memory 13
1.4.1 Flash 13
1.4.2 SRAM 13
1.5 System-Wide Resources 13
1.5.1 Clocking System 13
1.5.2 Power System 13
1.5.3 GPIO 13
1.6 Fixed-Function Digital 13
1.6.1 Timer/Counter/PWM Block 13
1.6.2 Serial Communication Blocks 13
1.7 Analog System 14
1.7.1 Low-Power Comparators 14
1.8 Special Function Peripherals 14
1.8.1 LCD Segment Drive 14
1.8.2 CapSense 14
1.9 Program and Debug 14
1.10 Device Feature Summary 14

2. Getting Started 15

2.1 PSoC 4 resources 15
2.1.1 ModusToolbox™ Software 15
2.1.2 PSoC Creator 17

3. Document Construction 18

3.1 Major Sections 18
3.2 Documentation Conventions 18
3.2.1 Register Conventions 18
3.2.2 Numeric Naming 18
3.2.3 Units of Measure 19
3.2.4 Acronyms 19

Section B: CPU System 21

Top Level Architecture 21

4. Cortex-M0+ CPU 22

4.1 Features....22
4.2 Block Diagram....23
4.3 How It Works....23
4.4 Address Map....23
4.5 Registers....24
4.6 Operating Modes....25
4.7 Instruction Set....25
4.7.1 Address Alignment....26
4.7.2 Memory Endianness....26
4.8 Systick Timer....26
4.9 Debug....26

5. Interrupts 27

5.1 Features....27
5.2 How It Works....27
5.3 Interrupts and Exceptions - Operation....28
5.3.1 Interrupt/Exception Handling....28
5.3.2 Level and Pulse Interrupts....28
5.3.3 Exception Vector Table....29
5.4 Exception Sources....29
5.4.1 Reset Exception....29
5.4.2 Non-Maskable Interrupt (NMI) Exception....30
5.4.3 HardFault Exception....30
5.4.4 Supervisor Call (SVCall) Exception....30
5.4.5 PendSV Exception....30
5.4.6 SysTick Exception....30
5.5 Interrupt Sources....31
5.6 Exception Priority....31
5.7 Enabling and Disabling Interrupts....32
5.8 Exception States....32
5.8.1 Pending Exceptions....32
5.9 Stack Usage for Exceptions....33
5.10 Interrupts and Low-Power Modes....33
5.11 Exceptions – Initialization and Configuration....34
5.12 Registers....34
5.13 Associated Documents....34

Section C: System Resources Subsystem (SRSS) 35

Top Level Architecture....35

6. I/O System 36

6.1 Features....36
6.2 GPIO Interface Overview....36
6.3 I/O Cell Architecture....38
6.3.1 Digital Input Buffer....39
6.3.2 Digital Output Driver....39
6.4 High-Speed I/O Matrix....41
6.5 Smart I/O....42
6.5.1 Overview....42
6.5.2 Block Components....42
6.5.3 Routing....50
6.5.4 Operation....51

6.6 I/O State on Power Up 51
6.7 Behavior in Low-Power Modes 52
6.8 Interrupt 52
6.9 Peripheral Connections 53
6.9.1 Firmware Controlled GPIO 53
6.9.2 Analog I/O 53
6.9.3 LCD Drive 53
6.9.4 CapSense 54
6.9.5 Serial Communication Block (SCB) 54
6.9.6 Timer, Counter, and Pulse Width Modulator (TCPWM) Block 54
6.10 Registers 55

7. Clocking System 56

7.1 Block Diagram 56
7.2 Clock Sources 57
7.2.1 Internal Main Oscillator 57
7.2.2 Internal Low-speed Oscillator 58
7.2.3 External Clock (EXTCLK) 58
7.2.4 Watch Crystal Oscillator (WCO) 58
7.3 Clock Distribution 59
7.3.1 HFCLK Input Selection 59
7.3.2 LFCLK Input Selection 59
7.3.3 SYSCLK Prescaler Configuration 59
7.3.4 Peripheral Clock Divider Configuration 60
7.4 Low-Power Mode Operation 62
7.5 Register List 62

8. Power Supply and Monitoring 63

8.1 Block Diagram 63
8.2 Power Supply Scenarios 64
8.2.1 Single 1.8 V to 5.5 V Unregulated Supply 64
8.2.2 Direct 1.71 V to 1.89 V Regulated Supply 64
8.3 How It Works 65
8.3.1 Regulator Summary 65
8.4 Voltage Monitoring 65
8.4.1 Power-On-Reset (POR) 65
8.5 Register List 65

9. Chip Operational Modes 66

9.1 Boot 66
9.2 User 66
9.3 Privileged 66
9.4 Debug 66

10. Power Modes 67

10.1 Active Mode 68
10.2 Sleep Mode 68
10.3 Deep-Sleep Mode 68
10.4 Power Mode Summary 69
10.5 Low-Power Mode Entry and Exit 70
10.6 Register List 70

11. Watchdog Timer 71

11.1 Features 71

11.2 Block Diagram 71
11.3 How It Works 72
11.3.1 Enabling and Disabling WDT 72
11.3.2 WDT Interrupts and Low-Power Modes 73
11.3.3 WDT Reset Mode 73
11.4 Register List 73

12. Reset System 74

12.1 Reset Sources 74
12.1.1 Power-on Reset 74
12.1.2 Brownout Reset 74
12.1.3 Watchdog Reset 74
12.1.4 Software Initiated Reset 74
12.1.5 External Reset 75
12.1.6 Protection Fault Reset 75
12.2 Identifying Reset Sources 75
12.3 Register List 75

13. Device Security 76

13.1 Features 76
13.2 How It Works 76
13.2.1 Device Security 76
13.2.2 Flash Security 77

Section D: Digital System 78

Top Level Architecture 78

14. Serial Communications Block (SCB) 79

14.1 Features 79
14.2 Serial Peripheral Interface (SPI) 79
14.2.1 Features 79
14.2.2 General Description 80
14.2.3 SPI Modes of Operation 81
14.2.4 Using SPI Master to Clock Slave 85
14.2.5 Easy SPI Protocol 85
14.2.6 SPI Registers 87
14.2.7 SPI Interrupts 87
14.2.8 Enabling and Initializing SPI 88
14.2.9 Internally and Externally Clocked SPI Operations 90
14.3 UART 93
14.3.1 Features 93
14.3.2 General Description 93
14.3.3 UART Modes of Operation 94
14.3.4 UART Registers 101
14.3.5 UART Interrupts 101
14.3.6 Enabling and Initializing UART 102
14.4 Inter Integrated Circuit (I2C) 103
14.4.1 Features 103
14.4.2 General Description 103
14.4.3 Terms and Definitions 104
14.4.4 I2C Modes of Operation 104
14.4.5 Easy I2C (EZI2C) Protocol 106
14.4.6 I2C Registers 107
14.4.7 I2C Interrupts 108

14.4.8 Enabling and Initializing the I2C 109
14.4.9 Internal and External Clock Operation in I2C 110
14.4.10 Wake up from Sleep 112
14.4.11 Master Mode Transfer Examples 113
14.4.12 Slave Mode Transfer Examples 115
14.4.13 EZ Slave Mode Transfer Example 117
14.4.14 Multi-Master Mode Transfer Example 119

15. Timer, Counter, and PWM 121

15.1 Features 121
15.2 Block Diagram 122
15.2.1 Enabling and Disabling Counter in TCPWM Block 122
15.2.2 Clocking 122
15.2.3 Events Based on Trigger Inputs 123
15.2.4 Output Signals 125
15.2.5 Power Modes 126
15.3 Modes of Operation 127
15.3.1 Timer Mode 128
15.3.2 Capture Mode 131
15.3.3 Quadrature Decoder Mode 133
15.3.4 Pulse Width Modulation Mode 136
15.3.5 Pulse Width Modulation with Dead Time Mode 140
15.3.6 Pulse Width Modulation Pseudo-Random Mode 142
15.4 TCPWM Registers 144

Section E: Analog System 145

Top Level Architecture 145

16. Low-Power Comparator 146

16.1 Features 146
16.2 Block Diagram 146
16.3 How It Works 147
16.3.1 Input Configuration 147
16.3.2 Output and Interrupt Configuration 148
16.3.3 Power Mode and Speed Configuration 149
16.3.4 Hysteresis 149
16.3.5 Wakeup from Low-Power Modes 150
16.3.6 Comparator Clock 150
16.3.7 Offset Trim 150
16.4 Register Summary 151

17. CapSense 152

18. LCD Direct Drive 153

18.1 Features 153
18.2 LCD Segment Drive Overview 153
18.2.1 Drive Modes 154
18.2.2 Recommended Usage of Drive Modes 162
18.2.3 Digital Contrast Control 162
18.3 Block Diagram 163
18.3.1 How it Works 163
18.3.2 High-Speed and Low-Speed Master Generators 163
18.3.3 Multiplexer and LCD Pin Logic 164
18.3.4 Display Data Registers 164

18.4 Register List 164

Section F: Program and Debug 165

Top Level Architecture 165

19. Program and Debug Interface 166

19.1 Features 166
19.2 Functional Description 166
19.3 Serial Wire Debug (SWD) Interface 167
19.3.1 SWD Timing Details 168
19.3.2 ACK Details 168
19.3.3 Turnaround (Trn) Period Details 168
19.4 Cortex-M0+ Debug and Access Port (DAP) 169
19.4.1 Debug Port (DP) Registers 169
19.4.2 Access Port (AP) Registers 169
19.5 Programming the PSoC 4 Device 170
19.5.1 SWD Port Acquisition 170
19.5.2 SWD Programming Mode Entry 170
19.5.3 SWD Programming Routines Executions 170
19.6 PSoC 4 SWD Debug Interface 171
19.6.1 Debug Control and Configuration Registers 171
19.6.2 Breakpoint Unit (BPU) 171
19.6.3 Data Watchpoint (DWT) 171
19.6.4 Debugging the PSoC 4 Device 172
19.7 Registers 172

20. Nonvolatile Memory Programming 173

20.1 Features 173
20.2 Functional Description 173
20.3 System Call Implementation 174
20.4 Blocking and Non-Blocking System Calls 174
20.4.1 Performing a System Call 174
20.5 System Calls 175
20.5.1 Silicon ID 176
20.5.2 Configure Clock 176
20.5.3 Load Flash Bytes 177
20.5.4 Write Row 178
20.5.5 Program Row 179
20.5.6 Erase All 180
20.5.7 Checksum 181
20.5.8 Write Protection 182
20.5.9 Non-Blocking Write Row 183
20.5.10 Non-Blocking Program Row 184
20.5.11 Resume Non-Blocking 185
20.6 System Call Status 186
20.7 Non-Blocking System Call Pseudo Code 187

Glossary 189

Section A: Overview

This section encompasses the following chapters:

- Introduction chapter on page 11
- Getting Started chapter on page 15
- Document Construction chapter on page 18

Document Revision History

Revision	Issue Date	Description of Change
**	December 02, 2015	Initial version of PSoC 4000S TRM.
*A	May 11, 2016	Initial public release of the PSoC 4000S TRM.
*B	May 31, 2017	Updated logo and copyright information.
*C	Oct 29, 2019	Removed text on WCO from section 1.5.1. Updated Content in Chapter 17. CapSense.
*D	Aug 31, 2021	Updated Chapter 2. Getting Started: Updated Section 2.2 Development Ecosystem. Removed Section 2.2 Product Upgrades. Removed Section 2.4 Application Notes. Updated Chapter 11. Watchdog Timer. Updated Copyright information.
*E	July 30, 2024	Fixed the broken links.

1. Introduction

PSoC® 4 is a programmable embedded system controller with an Arm® Cortex®-M0+ CPU. PSoC 4000Sis an enhanced version of the PSoC 4000 family and is upward-compatible with larger members of PSoC 4.

PSoC 4 devices have these characteristics:

- High-performance, 32-bit single-cycle Cortex-M0+ CPU core
- High-performance analog system
- Self and Mutual Capacitive touch sensing (CapSense®)
- Configurable Timer/Counter/PWM block
- Configurable communication block with I^2C, SPI, and UART operating modes
- Low-power operating modes – Sleep and Deep-Sleep

This document describes each functional block of the PSoC 4000S device in detail. This information will help designers to create system-level designs.

1.1 Top Level Architecture

Figure 1-1 shows the major components of the PSoC 4000S architecture.

Figure 1-1. PSoC 4000S Family Block Diagram

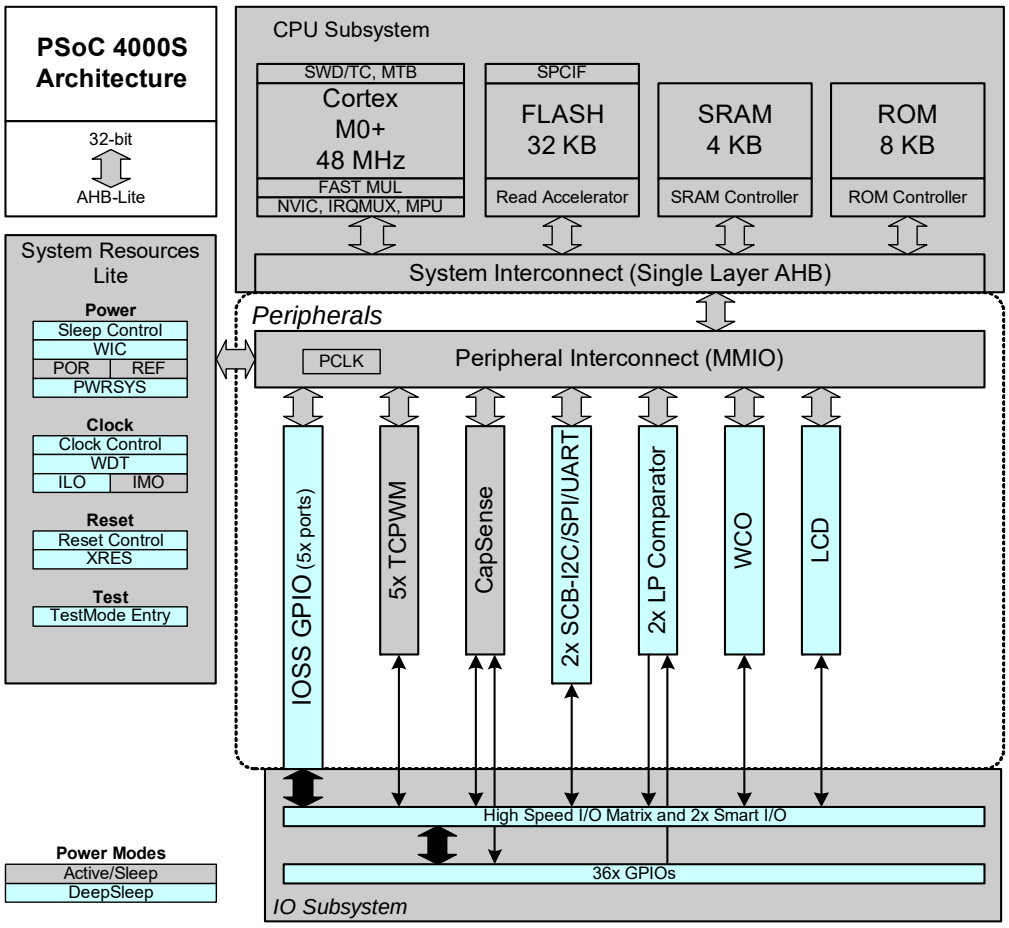

1.2 Features

The PSoC 4000S family has these major components:

- 32-bit Cortex-M0+ CPU with single-cycle multiply, delivering up to 0.9 DMIPS/MHz
- Up to 32 KB flash and 4 KB SRAM
- Five center-aligned pulse-width modulator (PWM) with complementary, dead-band programmable outputs
- Two low-power comparators
- Two serial communication blocks (SCB) that can work as SPI, UART, I^2C, and local interconnect network (LIN) slave serial communication channels
- A Smart I/O block, which provides the ability to perform Boolean functions in the I/O signal path
- CapSense
- Segment LCD direct drive
- Low-power operating modes: Sleep and Deep-Sleep
- Programming and debugging system through serial wire debug (SWD)
- Fully supported by PSoC Creator™ IDE tool

1.3 CPU System

1.3.1 Processor

The heart of the PSoC 4 is a 32-bit Cortex-M0+ CPU core running up to 48 MHz for PSoC 4000S. It is optimized for low-power operation with extensive clock gating. It uses 16-bit instructions and executes a subset of the Thumb-2 instruction set. This instruction set enables fully compatible binary upward migration of the code to higher performance processors such as Cortex M3 and M4.

The CPU has a hardware multiplier that provides a 32-bit result in one cycle.

1.3.2 Interrupt Controller

The CPU subsystem includes a nested vectored interrupt controller (NVIC) with 16 interrupt inputs and a wakeup interrupt controller (WIC), which can wake the processor from Deep-Sleep mode.

1.4 Memory

The PSoC 4 memory subsystem consists of flash and SRAM. A supervisory ROM, containing boot and configuration routines, is also present.

1.4.1 Flash

The PSoC 4 has a flash module, with a flash accelerator tightly coupled to the CPU, to improve average access times from the flash block. The flash accelerator delivers 85 percent of single-cycle SRAM access performance on an average.

1.4.2 SRAM

The PSoC 4 provides SRAM, which is retained in all power modes of the device.

1.5 System-Wide Resources

1.5.1 Clocking System

The clocking system consists of the internal main oscillator (IMO) and internal low-speed oscillator (ILO) as internal clocks and has provision for an external clock and watch crystal oscillator (WCO).

The IMO with an accuracy of ±2 percent is the primary source of internal clocking in the device. The default IMO frequency is 24 MHz and can be adjusted between 24 MHz and 48 MHz in steps of 4 MHz. Multiple clock derivatives are generated from the main clock frequency to meet various application needs.

The ILO is a low-power, less accurate oscillator and is used as a source for LFCLK, to generate clocks for peripheral operation in Deep-Sleep mode. Its clock frequency is 40 kHz with ±60 percent accuracy.

An external clock source ranging from 1 MHz to 48 MHz can be used to generate the clock derivatives for the functional blocks instead of the IMO.

1.5.2 Power System

The device operates with a single external supply in the range 1.71 V to 5.5 V. It provides multiple power supply domains – V_{DDD} to power digital section, and V_{DDA} for noise isolation of analog section. V_{DDD} and V_{DDA} should be shorted externally.

The device has two low-power modes – Sleep and Deep-Sleep – in addition to the default Active mode. In Active mode, the CPU runs with all the logic powered. In Sleep mode, the CPU is powered off with all other peripherals functional. In Deep-Sleep mode, the CPU, SRAM, and high-speed logic are in retention; the main system clock is OFF while the low-frequency clock is ON and the low-frequency peripherals are in operation.

Multiple internal regulators are available in the system to support power supply schemes in different power modes.

1.5.3 GPIO

Every GPIO has the following characteristics:

- Eight drive strength modes
- Individual control of input and output disables
- Hold mode for latching previous state
- Selectable slew rates
- Interrupt generation – edge triggered

In addition, the device has two Smart I/O blocks that provides the ability to perform Boolean functions on the port I/Os. The Smart I/O block is available in all device power modes, including low-power modes.

The pins are organized in a port that is 8-bit wide. A high-speed I/O matrix is used to multiplex between various signals that may connect to an I/O pin. Pin locations for fixed-function peripherals are also fixed.

1.6 Fixed-Function Digital

1.6.1 Timer/Counter/PWM Block

The Timer/Counter/PWM block consists of five 16-bit counter with user-programmable period length. The TCPWM block has a capture register, period register, and compare register. The block supports complementary, dead-band programmable outputs. It also has a kill input to force outputs to a predetermined state. Other features of the block include center-aligned PWM, clock prescaling, pseudo random PWM, and quadrature decoding.

1.6.2 Serial Communication Blocks

The device has two SCBs. Each SCB can implement a serial communication interface as I^2C, UART, local interconnect network (LIN) slave, or SPI.

The features of each SCB include:

- Standard I^2C multi-master and slave function
- Standard SPI master and slave function with Motorola, Texas Instruments, and National (MicroWire) mode
- Standard UART transmitter and receiver function with SmartCard reader (ISO7816), IrDA protocol, and LIN
- Standard LIN slave with LIN v1.3 and LIN v2.1/2.2 specification compliance
- EZ function mode support with 32-byte buffer

1.7 Analog System

1.7.1 Low-Power Comparators

The PSoC 4 has a pair of low-power comparators, which can operate in all device power modes. This functionality allows the CPU and other system blocks to be disabled while retaining the ability to monitor external voltage levels during low-power modes. Two input voltages can both come from pins, or one from an internal signal through the AMUX-BUS.

1.8 Special Function Peripherals

1.8.1 LCD Segment Drive

The PSoC 4 has an LCD controller, which can drive up to eight commons and every GPIO can be configured to drive common or segment. It uses full digital methods (digital correlation and PWM) to drive the LCD segments, and does not require generation of internal LCD voltages.

1.8.2 CapSense

PSoC 4000S devices support fourth generation CapSense, which has the following features:

- Self-capacitance and mutual-capacitance-based touch sensing
- Robust CapSense Sigma Delta (CSD) and CapSense Crosspoint (CSX) sensing technologies that provide best-in class SNR for self-capacitance and mutual-capacitance-based touch sensing respectively
- Allows reconfiguring the CapSense block as an ADC and supports ADC input on any GPIO pin
- Superior SNR with programmable voltage reference (VREF)
- Supports spread spectrum and programmable resistance switches for lower electromagnetic interference (EMI)
- Reduced overhead on CPU during scanning by offloading initialization and configuration process to the CapSense sequencer
- Liquid tolerant CapSense operation using driven shield signal
- Capacitive touch sensing and shielding on all GPIO pins

1.8.2.1 IDACs and Comparator

The CapSense block has two IDACs and a comparator with an adjustable reference, which can be used for general purposes, if CapSense is not used.

1.9 Program and Debug

PSoC 4 devices support programming and debugging features of the device via the on-chip SWD interface. The PSoC Creator IDE provides fully integrated programming and debugging support. The SWD interface is also fully compatible with industry standard third-party tools.

1.10 Device Feature Summary

Table 1-1 shows the PSoC 4000S devices summary.

Table 1-1. PSoC 4000S Device Summary

Feature	PSoC 4000S
Maximum CPU Frequency	48 MHz
Flash	32 KB
SRAM	4 KB
GPIOs (max)	36
Smart I/O	2 Ports
CapSense	Available
LCD Driver	Available
Timer, Counter, PWM (TCPWM)	5
Serial Communication Block (SCB)	2
IDAC (part of CapSense)	2
Low-Power Comparator (LPCOMP)	2
Watch Crystal Oscillator (WCO)	Available
Power Modes	Active, Sleep, and Deep-Sleep

Note The PSoC 4100S Plus device includes two difference Flash and SRAM size family. They are named PSoC 4100S Plus and PSoC 4100S Plus 256 KB in datasheet. The PSoC 4100S Plus family has 128 KB flash, 16 KB RAM, three Smart I/O ports, and up to 57 programmable GPIO. But it does not have the True Random Number Generator (TRNG) and Controller Area Network (CAN) functions. Other functions and peripherals are the same with PSoC 4100S Plus family.

2. Getting Started

2.1 PSoC 4 resources

Infineon provides a wealth of data at www.infineon.com to help you select the right PSoC device and quickly and effectively integrate it into your design. The following is an abbreviated, hyperlinked list of resources for PSoC 4 MCU:

- Overview: PSoC portfolio
- Product Selectors: PSoC 4 MCU
- Application Notes cover a broad range of topics, from basic to advanced level, and include the following:
  - AN79953: Getting Started with PSoC 4 MCU
  - AN88619: PSoC 4 MCU Hardware Design Considerations
  - AN73854: PSoC Creator - Introduction to Bootloaders
  - AN89610: PSoC Arm® Cortex® Code Optimization
  - AN86233: PSoC 4 MCU low-power modes and power reduction techniques
  - AN57821: PSoC 3, PSoC 4, and PSoC 5LP Mixed Signal Circuit Board Layout Considerations
  - AN85951: PSoC 4 and PSoC 6 MCU CapSense Design Guide
- Code Examples demonstrate product features and usage, and are also available on GitHub repositories
- Datasheets describe and provide electrical specifications for each family.
- PSoC 4 MCU Programming Specification provides the information necessary to program PSoC 4 MCU non-volatile memory.
- Development Tools
  - ***ModusToolbox™ Software*** enables cross platform code development with a robust suite of tools and software libraries
  - ***PSoC Creator*** is a free Windows-based IDE. It enables concurrent hardware and firmware design of PSoC 3, PSoC 4, PSoC 5LP, and PSoC 6 MCU based systems. Applications are created using schematic capture and over 150 pre-verified, production-ready peripheral Components
  - CY8CKIT-145-40xx PSoC 4000S CapSense prototyping kit, is a low-cost and easy-to-use evaluation platform. This kit provides easy access to all the device I/Os in a breadboard-compatible format.
  - MiniProg4 (CY8CKIT-005-A) and MiniProg3 (CY8CKIT-002) all-in-one development programmers and debuggers
- PSoC 4 MCU CAD libraries provide footprint and schematic support for common tools. IBIS models are also available.
- Training videos are available on a wide range of topics including the PSoC MCUs
- Infineon Developer Community enables connection with fellow PSoC developers around the world, 24 hours a day, 7 days a week, and hosts a dedicated PSoC 4 MCU community.

2.1.1 ModusToolbox™ Software

ModusToolbox™ Software is Infineon's comprehensive collection of multi-platform tools and software libraries that enable an immersive development experience for creating converged MCU and wireless systems. It is:

- Comprehensive - it has the resources you need
- Flexible - you can use the resources in your own workflow
- Atomic - you can get just the resources you want

Infineon provides a large collection of code repositories on GitHub, including:

- Board Support Packages (BSPs) aligned with Infineon kits
- Low-level resources, including a peripheral driver library (PDL)
- Middleware enabling industry-leading features such as CapSense
- An extensive set of thoroughly tested code example applications

ModusToolbox™ Software is IDE-neutral and easily adaptable to your workflow and preferred development environment. It includes a project creator, peripheral and library configurations, a library manager, as well as the optional Eclipse IDE for ModusToolbox™, as Figure 2-1 shows. For information on Infineon tools, refer to the documentation delivered with ModusToolbox™ Software, and AN79953: Getting started with PSoC 4 MCU.

Figure 2-1. ModusToolbox™ software tools

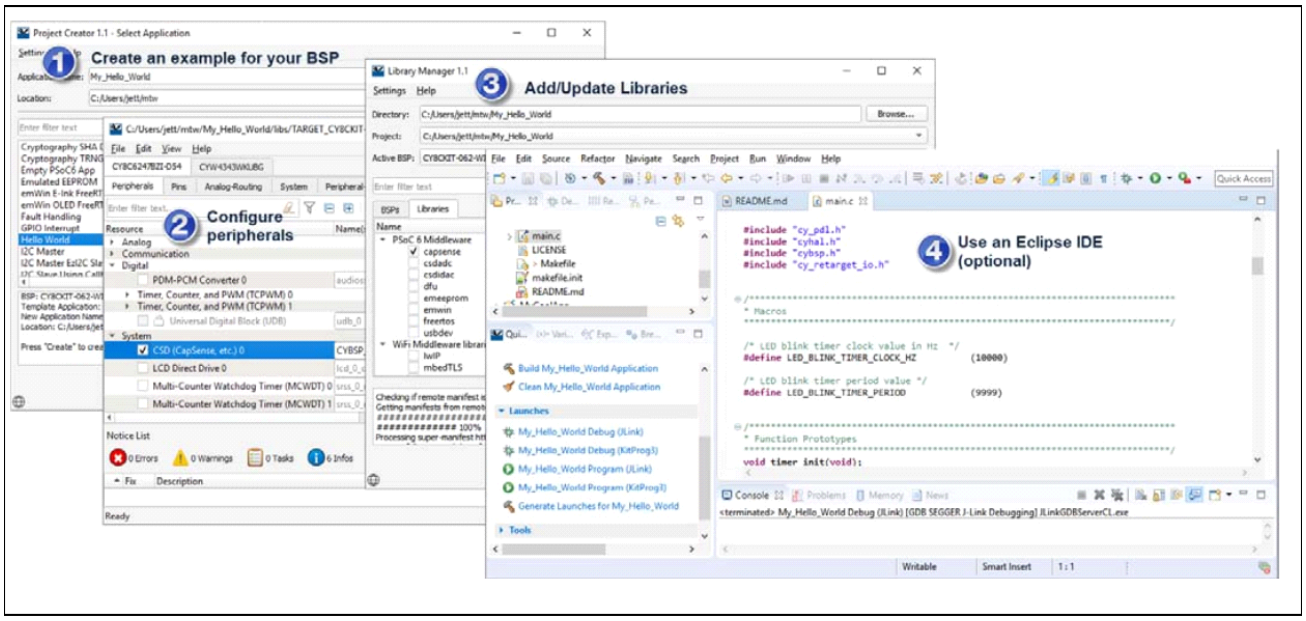

2.1.2 PSoC Creator

PSoC Creator is a free Windows-based Integrated Design Environment (IDE). It enables you to design hardware and firmware systems concurrently, based on PSoC 4 MCU. As Figure 2-2 shows, with PSoC Creator you can:

1. Explore the library of 200+ components.
2. Drag and drop component icons to complete your hardware system design in the main design workspace.
3. Configure Components using the Component configuration tools and the Component datasheets.
4. Co-design your application firmware and hardware in the PSoC Creator IDE or build a project for a third-party IDE.
5. Prototype your solution with the PSoC 4 Pioneer kits. If a design change is needed, PSoC Creator and Components enable you to make changes on-the-fly without the need for hardware revisions.

For information on Infineon tools, refer to the documentation delivered with PSoC Creator software, and AN79953: Getting started with PSoC 4 MCU.

Figure 2-2. Multiple-sensor example project in PSoC Creator

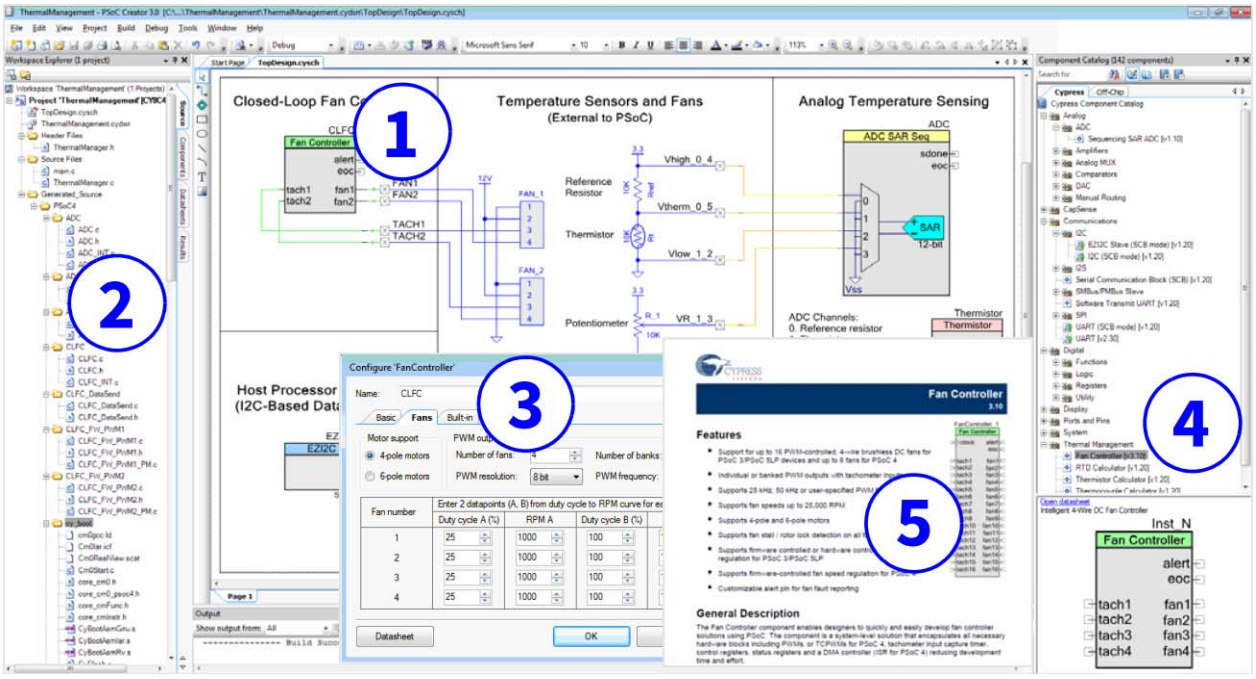

3. Document Construction

This document includes the following sections:

- Section B: CPU System on page 21
- Section C: System Resources Subsystem (SRSS) on page 35
- Section D: Digital System on page 78
- Section E: Analog System on page 145
- Section F: Program and Debug on page 165

3.1 Major Sections

For ease of use, information is organized into sections and chapters that are divided according to device functionality.

- Section – Presents the top-level architecture, how to get started, and conventions and overview information of the product.
- Chapter – Presents the chapters specific to an individual aspect of the section topic. These are the detailed implementation and use information for some aspect of the integrated circuit.
- Glossary – Defines the specialized terminology used in this technical reference manual (TRM). Glossary terms are presented in bold, italic font throughout.
- Registers Technical Reference Manual – Supplies all device register details summarized in the technical reference manual. This is an additional document.

3.2 Documentation Conventions

This document uses only four distinguishing font types, besides those found in the headings.

- The first is the use of *italics* when referencing a document title or file name.
- The second is the use of ***bold italics*** when referencing a term described in the Glossary of this document.
- The third is the use of Times New Roman font, distinguishing equation examples.
- The fourth is the use of `Courier New` font, distinguishing code examples.

3.2.1 Register Conventions

Register conventions are detailed in the PSoC 4000S Family: PSoC 4 Registers TRM.

3.2.2 Numeric Naming

Hexadecimal numbers are represented with all letters in uppercase with an appended lowercase ‘h’ (for example, ‘14h’ or ‘3Ah’) and *hexadecimal* numbers may also be represented by a ‘0x’ prefix, the *C* coding convention. Binary numbers have an appended lowercase ‘b’ (for example, 01010100b’ or ‘01000011b’). Numbers not indicated by an ‘h’ or ‘b’ are *decimal*.

3.2.3 Units of Measure

This table lists the units of measure used in this document.

Table 3-1. Units of Measure

Abbreviation	Unit of Measure
bps	bits per second
°C	degrees Celsius
dB	decibels
fF	femtofarads
Hz	Hertz
k	kilo, 1000
K	kilo, 2^10
KB	1024 bytes, or approximately one thousand bytes
Kbit	1024 bits
kHz	kilohertz (32.000)
kΩ	kilohms
MHz	megahertz
MΩ	megaohms
µA	microamperes
µF	microfarads
µs	microseconds
µV	microvolts
µVrms	microvolts root-mean-square
mA	milliamperes
ms	milliseconds
mV	millivolts
nA	nanoamperes
ns	nanoseconds
nV	nanovolts
Ω	ohms
pF	picofarads
pp	peak-to-peak
ppm	parts per million
SPS	samples per second
σ	sigma: one standard deviation
V	volts

3.2.4 Acronyms

This table lists the acronyms used in this document

Table 3-2. Acronyms

Acronym	Definition
ABUS	analog output bus
AC	alternating current
ADC	analog-to-digital converter
AHB	AMBA (advanced microcontroller bus architecture) high-performance bus, an Arm data transfer bus
API	application programming interface
APOR	analog power-on reset
BC	broadcast clock
BOD	brownout detect
BOM	bill of materials
BR	bit rate
BRA	bus request acknowledge
BRQ	bus request
CAN	controller area network
CI	carry in
CMP	compare
CO	carry out
COM	LCD common signal
CPU	central processing unit
CRC	cyclic redundancy check
CSD	CapSense sigma delta
CT	continuous time
DAC	digital-to-analog converter
DAP	debug access port
DC	direct current
DI	digital or data input
DMA	direct memory access
DMIPS	Dhrystone million instructions per second
DO	digital or data output
DSI	digital signal interface
DSM	deep-sleep mode
DW	data wire
ECO	external crystal oscillator
EEPROM	electrically erasable programmable read only memory
EMIF	external memory interface
FB	feedback
FIFO	first in first out
FSR	full scale range
GPIO	general purpose I/O
HCI	host-controller interface
HFCLK	high-frequency clock
HSIOM	high-speed I/O matrix
I^2C	inter-integrated circuit

Table 3-2. Acronyms *(continued)*

Acronym	Definition
IDE	integrated development environment
ILO	internal low-speed oscillator
ITO	indium tin oxide
IMO	internal main oscillator
INL	integral nonlinearity
I/O	input/output
IOR	I/O read
IOW	I/O write
IRES	initial power on reset
IRA	interrupt request acknowledge
IRQ	interrupt request
ISR	interrupt service routine
IVR	interrupt vector read
LCD	liquid crystal display
LFCLK	low-frequency clock
LPCOMP	low-power comparator
LRb	last received bit
LRB	last received byte
LSb	least significant bit
LSB	least significant byte
LUT	lookup table
MISO	master-in-slave-out
MMIO	memory mapped input/output
MOSI	master-out-slave-in
MPU	memory protection unit
MSb	most significant bit
MSB	most significant byte
MSP	main stack pointer
NMI	non-maskable interrupt
NVIC	nested vectored interrupt controller
PC	program counter
PCB	printed circuit board
PCH	program counter high
PCL	program counter low
PD	power down
PGA	programmable gain amplifier
PM	power management
PMA	PSoC memory arbiter
POR	power-on reset
PPOR	precision power-on reset
PRS	pseudo random sequence
PSoC®	Programmable System-on-Chip
PSP	process stack pointer
PSRR	power supply rejection ratio
PSSDC	power system sleep duty cycle
PWM	pulse width modulator
RAM	random-access memory

Table 3-2. Acronyms *(continued)*

Acronym	Definition
RETI	return from interrupt
RF	radio frequency
ROM	read only memory
RMS	root mean square
RW	read/write
SAR	successive approximation register
SEG	LCD segment signal
SC	switched capacitor
SCB	serial communication block
SIE	serial interface engine
SIO	special I/O
SE0	single-ended zero
SNR	signal-to-noise ratio
SOF	start of frame
SOI	start of instruction
SP	stack pointer
SPD	sequential phase detector
SPI	serial peripheral interconnect
SPIM	serial peripheral interconnect master
SPIS	serial peripheral interconnect slave
SRAM	static random-access memory
SROM	supervisory read only memory
SSADC	single slope ADC
SSC	supervisory system call
SYSCLK	system clock
SWD	single wire debug
TC	terminal count
TCPWM	timer, counter, PWM
TD	transaction descriptors
TIA	trans-impedance amplifier
UART	universal asynchronous receiver/transmitter
UDB	universal digital block
USB	universal serial bus
USBIO	USB I/O
VTOR	vector table offset register
WCO	watch crystal oscillator
WDT	watchdog timer
WDR	watchdog reset
XRES	external reset
XRES_N	external reset, active low

Section B: CPU System

This section encompasses the following chapters:

- Cortex-M0+ CPU chapter on page 22
- Interrupts chapter on page 27

Top Level Architecture

CPU System Block Diagram

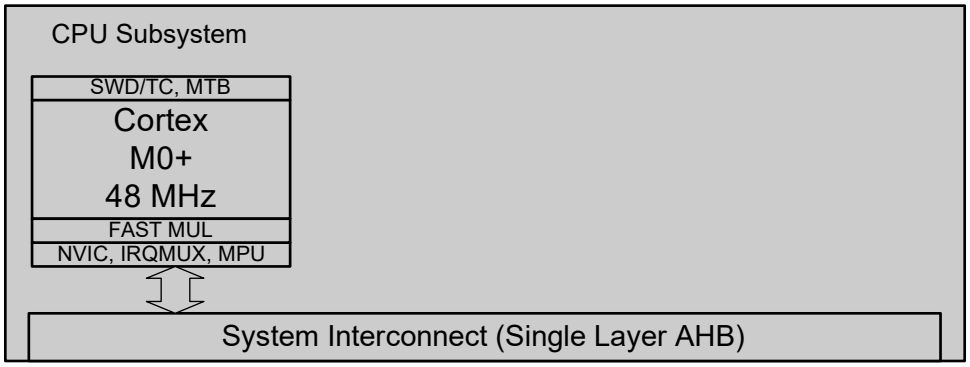

4. Cortex-M0+ CPU

The PSoC® 4 Arm Cortex-M0+ core is a 32-bit CPU optimized for low-power operation. It has an efficient two-stage pipeline, a fixed 4-GB memory map, and supports the Armv6-M Thumb instruction set. The Cortex-M0+ also features a single-cycle 32-bit multiply instruction and low-latency interrupt handling. Other subsystems tightly linked to the CPU core include a nested vectored interrupt controller (NVIC), a SYSTICK timer, and debug.

This section gives an overview of the Cortex-M0+ processor. For more details, see the Arm Cortex-M0+ Generic User Guide or Technical Reference Manual, both available at www.arm.com.

4.1 Features

The PSoC 4 Cortex-M0+ has the following features:

- Easy to use, program, and debug, ensuring easier migration from 8- and 16-bit processors
- Operates at up to 0.9 DMIPS/MHz; this helps to increase execution speed or reduce power
- Supports the Thumb instruction set for improved code density, ensuring efficient use of memory
- NVIC unit to support interrupts and exceptions for rapid and deterministic interrupt response
- Implements design time configurable Memory Protection Unit (MPU)
- Supports unprivileged and privileged mode execution
- Supports optional Vector Table Offset Register (VTOR)
- Extensive debug support including:
  - SWD port
  - Breakpoints
  - Watchpoints

4.2 Block Diagram

Figure 4-1. CPU Subsystem Block Diagram

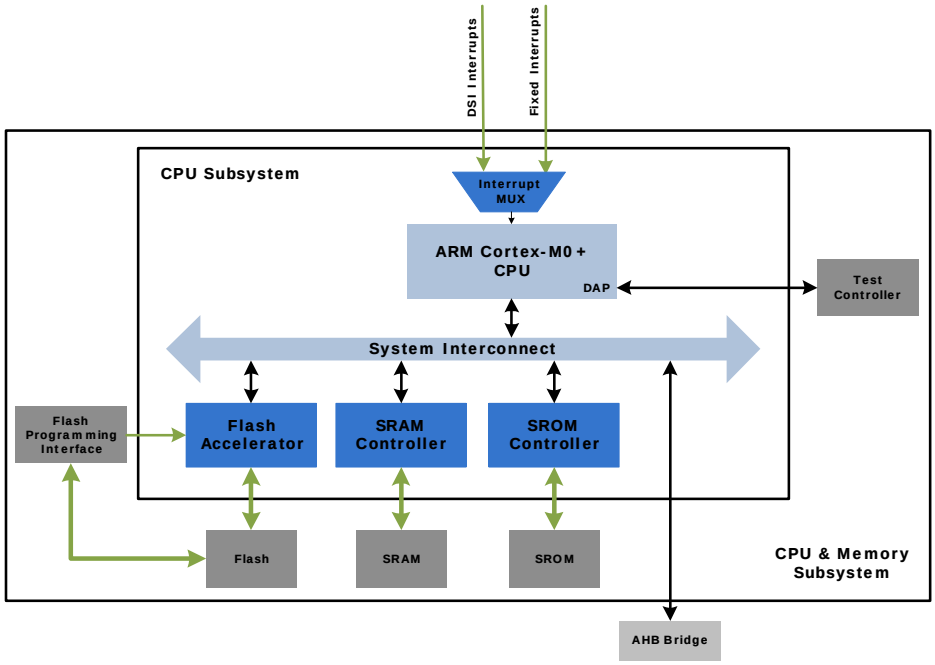

4.3 How It Works

The Cortex-M0+ is a 32-bit processor with a 32-bit data path, 32-bit registers, and a 32-bit memory interface. It supports most 16-bit instructions in the Thumb instruction set and some 32-bit instructions in the Thumb-2 instruction set.

The processor supports two operating modes (see Operating Modes on page 25). It has a single-cycle 32-bit multiplication instruction.

4.4 Address Map

The Arm Cortex-M0+ has a fixed address map allowing access to memory and peripherals using simple memory access instructions. The 32-bit (4 GB) address space is divided into the regions shown in Table 4-1. Note that code can be executed from the code and SRAM regions.

Table 4-1. Cortex-M0+ Address Map

Address Range	Name	Use
0x00000000 - 0x1FFFFFFF	Code	Program code region. You can also place data here. Includes the exception vector table, which starts at address 0.
0x20000000 - 0x3FFFFFFF	SRAM	Data region. You can also execute code from this region.
0x40000000 - 0x5FFFFFFF	Peripheral	All peripheral registers. You cannot execute code from this region.
0x60000000 - 0xDFFFFFFF		Not used.
0xE0000000 - 0xE00FFFFF	PPB	Peripheral registers within the CPU core.
0xE0100000 - 0xFFFFFFFF	Device	PSoC 4 implementation-specific.

4.5 Registers

The Cortex-M0+ has sixteen 32-bit registers, as Table 4-2 shows:

- R0 to R12 – General-purpose registers. R0 to R7 can be accessed by all instructions; the other registers can be accessed by a subset of the instructions.
- R13 – Stack pointer (SP). There are two stack pointers, with only one available at a time. In thread mode, the CONTROL register indicates the stack pointer to use, Main Stack Pointer (MSP) or Process Stack Pointer (PSP).
- R14 – Link register. Stores the return program counter during function calls.
- R15 – Program counter. This register can be written to control program flow.

Table 4-2. Cortex-M0+ Registers

Name	Type[a]	Reset Value	Description
R0-R12	RW	Undefined	R0-R12 are 32-bit general-purpose registers for data operations.
MSP (R13) PSP (R13)	RW	[0x00000000]	The stack pointer (SP) is register R13. In thread mode, bit[1] of the CONTROL register indicates which stack pointer to use: 0 = Main stack pointer (MSP). This is the reset value. 1 = Process stack pointer (PSP). On reset, the processor loads the MSP with the value from address 0x00000000.
LR (R14)	RW	Undefined	The link register (LR) is register R14. It stores the return information for subroutines, function calls, and exceptions.
PC (R15)	RW	[0x00000004]	The program counter (PC) is register R15. It contains the current program address. On reset, the processor loads the PC with the value from address 0x00000004. Bit[0] of the value is loaded into the EPSR T-bit at reset and must be 1.
PSR	RW	Undefined	The program status register (PSR) combines: Application Program Status Register (APSR). Execution Program Status Register (EPSR). Interrupt Program Status Register (IPSR).
APSR	RW	Undefined	The APSR contains the current state of the condition flags from previous instruction executions.
EPSR	RO	[0x00000004].0	On reset, EPSR is loaded with the value bit[0] of the register [0x00000004].
IPSR	RO	0	The IPSR contains the exception number of the current ISR.
PRIMASK	RW	0	The PRIMASK register prevents activation of all exceptions with configurable priority.
CONTROL	RW	0	The CONTROL register controls the stack used when the processor is in thread mode.

a. Describes access type during program execution in thread mode and handler mode. Debug access can differ.

Table 4-3 shows how the PSR bits are assigned.

Table 4-3. Cortex-M0+ PSR Bit Assignments

Bit	PSR Register	Name	Usage
31	APSR	N	Negative flag
30	APSR	Z	Zero flag
29	APSR	C	Carry or borrow flag
28	APSR	V	Overflow flag

Table 4-3. Cortex-M0+ PSR Bit Assignments

Bit	PSR Register	Name	Usage
27 – 25	–	–	Reserved
24	EPSR	T	Thumb state bit. Must always be 1. Attempting to execute instructions when the T bit is 0 results in a HardFault exception.
23 – 6	–	–	Reserved
5 – 0	IPSR	N/A	Exception number of current ISR: 0 = thread mode 1 = reserved 2 = NMI 3 = HardFault 4 – 10 = reserved 11 = SVCall 12, 13 = reserved 14 = PendSV 15 = SysTick 16 = IRQ0 … 47 = 32

Use the MSR or CPS instruction to set or clear bit 0 of the PRIMASK register. If the bit is 0, exceptions are enabled. If the bit is 1, all exceptions with configurable priority, that is, all exceptions except HardFault, NMI, and Reset, are disabled. See the Interrupts chapter on page 27 for a list of exceptions.

4.6 Operating Modes

The Cortex-M0+ processor supports two operating modes:

- Thread Mode – used by all normal applications. In this mode, the MSP or PSP can be used. The CONTROL register bit 1 determines which stack pointer is used:
  - 0 = MSP is the current stack pointer
  - 1 = PSP is the current stack pointer
- Handler Mode – used to execute exception handlers. The MSP is always used.

In thread mode, use the MSR instruction to set the stack pointer bit in the CONTROL register. When changing the stack pointer, use an ISB instruction immediately after the MSR instruction. This action ensures that instructions after the ISB execute using the new stack pointer.

In handler mode, explicit writes to the CONTROL register are ignored, because the MSP is always used. The exception entry and return mechanisms automatically update the CONTROL register.

4.7 Instruction Set

The Cortex-M0+ implements a version of the Thumb instruction set, as Table 4-4 shows. For details, see the Cortex-M0+ Generic User Guide.

An instruction operand can be an Arm register, a constant, or another instruction-specific parameter. Instructions act on the operands and often store the result in a destination register. Many instructions are unable to use, or have restrictions on using, the PC or SP for the operands or destination register.

Table 4-4. Thumb Instruction Set

Mnemonic	Brief Description
ADCS	Add with carry
ADD{S}[a]	Add
ADR	PC-relative address to register
ANDS	Bit wise AND
ASRS	Arithmetic shift right
B{cc}	Branch {conditionally}
BICS	Bit clear
BKPT	Breakpoint
BL	Branch with link
BLX	Branch indirect with link
BX	Branch indirect
CMN	Compare negative
CMP	Compare
CPSID	Change processor state, disable interrupts
CPSIE	Change processor state, enable interrupts
DMB	Data memory barrier
DSB	Data synchronization barrier

Table 4-4. Thumb Instruction Set

Mnemonic	Brief Description
EORS	Exclusive OR
ISB	Instruction synchronization barrier
LDM	Load multiple registers, increment after
LDR	Load register from PC-relative address
LDRB	Load register with word
LDRH	Load register with half-word
LDRSB	Load register with signed byte
LDRSH	Load register with signed half-word
LSLS	Logical shift left
LSRS	Logical shift right
MOV{S}[a]	Move
MRS	Move to general register from special register
MSR	Move to special register from general register
MULS	Multiply, 32-bit result
MVNS	Bit wise NOT
NOP	No operation
ORRS	Logical OR
POP	Pop registers from stack
PUSH	Push registers onto stack
REV	Byte-reverse word
REV16	Byte-reverse packed half-words
REVSH	Byte-reverse signed half-word
RORS	Rotate right
RSBS	Reverse subtract
SBCS	Subtract with carry
SEV	Send event
STM	Store multiple registers, increment after
STR	Store register as word
STRB	Store register as byte
STRH	Store register as half-word
SUB{S}[a]	Subtract
SVC	Supervisor call
SXTB	Sign extend byte
SXTH	Sign extend half-word
TST	Logical AND-based test
UXTB	Zero extend a byte
UXTH	Zero extend a half-word
WFE	Wait for event
WFI	Wait for interrupt

a. The ‘S’ qualifier causes the ADD, SUB, or MOV instructions to update APSR condition flags.

4.7.1 Address Alignment

An aligned access is an operation where a word-aligned address is used for a word or multiple word access, or where a half-word-aligned address is used for a half-word access. Byte accesses are always aligned.

No support is provided for unaligned accesses on the Cortex-M0+ processor. Any attempt to perform an unaligned memory access operation results in a HardFault exception.

4.7.2 Memory Endianness

The Cortex-M0+ uses the little-endian format, where the least-significant byte of a word is stored at the lowest address and the most significant byte is stored at the highest address.

4.8 Systick Timer

The Systick timer is integrated with the NVIC and generates the SYSTICK interrupt. This interrupt can be used for task management in a real-time system. The timer has a reload register with 24 bits available to use as a countdown value. The Systick timer uses either the Cortex-M0+ internal clock or the low-frequency clock (LF_CLK) as the source.

4.9 Debug

PSoC 4 contains a debug interface based on SWD; it features four breakpoint (address) comparators and two watchpoint (data) comparators.

5. Interrupts

The Arm Cortex-M0+ (CM0+) CPU in PSoC® 4 supports interrupts and exceptions. Interrupts refer to those events generated by peripherals external to the CPU such as timers, serial communication block, and port pin signals. Exceptions refer to those events that are generated by the CPU such as memory access faults and internal system timer events. Both interrupts and exceptions result in the current program flow being stopped and the exception handler or interrupt service routine (ISR) being executed by the CPU. The device provides a unified exception vector table for both interrupt handlers/ISR and exception handlers.

5.1 Features

PSoC 4 supports the following interrupt features:

- Supports 16 interrupts
- Nested vectored interrupt controller (NVIC) integrated with CPU core, yielding low interrupt latency
- Vector table may be placed in either flash or SRAM
- Configurable priority levels from 0 to 3 for each interrupt
- Level-triggered and pulse-triggered interrupt signals

5.2 How It Works

Figure 5-1. PSoC 4 Interrupts Block Diagram

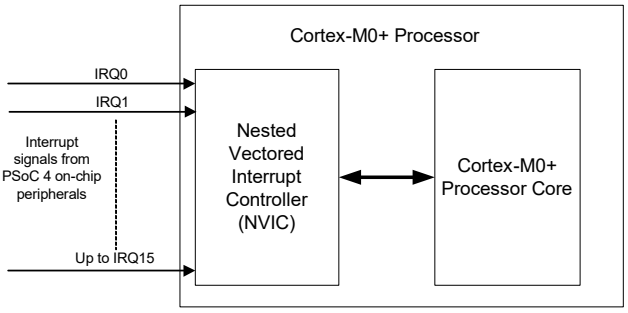

Figure 5-1 shows the interaction between interrupt signals and the Cortex-M0+ CPU. PSoC 4 has 16 interrupts; these interrupt signals are processed by the NVIC. The NVIC takes care of enabling/disabling individual interrupts, priority resolution, and communication with the CPU core. The exceptions are not shown in Figure 5-1 because they are part of CM0+ core generated events, unlike interrupts, which are generated by peripherals external to the CPU.

5.3 Interrupts and Exceptions - Operation

5.3.1 Interrupt/Exception Handling

The following sequence of events occurs when an interrupt or exception event is triggered:

1. Assuming that all the interrupt signals are initially low (idle or inactive state) and the processor is executing the main code, a rising edge on any one of the interrupt lines is registered by the NVIC. The interrupt line is now in a pending state waiting to be serviced by the CPU.
2. On detecting the interrupt request signal from the NVIC, the CPU stores its current context by pushing the contents of the CPU registers onto the stack.
3. The CPU also receives the exception number of the triggered interrupt from the NVIC. All interrupts and exceptions have a unique exception number, as given in Table 5-1. By using this exception number, the CPU fetches the address of the specific exception handler from the vector table.
4. The CPU then branches to this address and executes the exception handler that follows.
5. Upon completion of the exception handler, the CPU registers are restored to their original state using stack pop operations; the CPU resumes the main code execution.

Figure 5-2. Interrupt Handling When Triggered

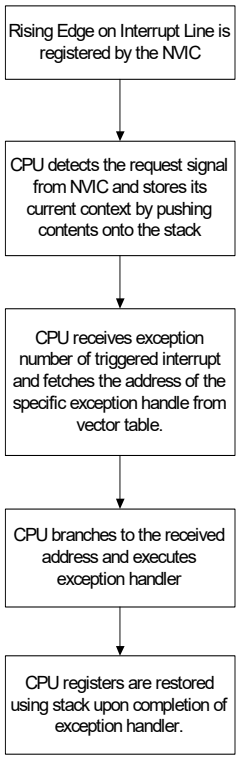

When the NVIC receives an interrupt request while another interrupt is being serviced or receives multiple interrupt requests at the same time, it evaluates the priority of all these interrupts, sending the exception number of the highest priority interrupt to the CPU. Thus, a higher priority interrupt can block the execution of a lower priority ISR at any time.

Exceptions are handled in the same way that interrupts are handled. Each exception event has a unique exception number, which is used by the CPU to execute the appropriate exception handler.

5.3.2 Level and Pulse Interrupts

NVIC supports both level and pulse signals on the interrupt lines (IRQ0 to IRQ15). The classification of an interrupt as level or pulse is based on the interrupt source.

Figure 5-3. Level Interrupts

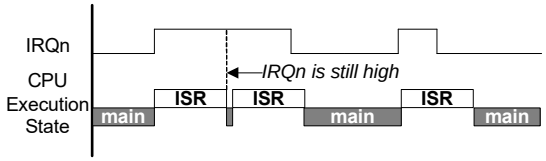

Figure 5-4. Pulse Interrupts

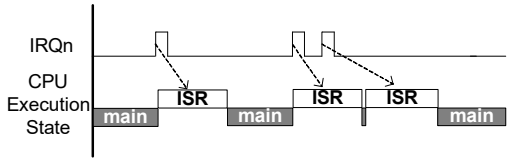

Figure 5-3 and Figure 5-4 show the working of level and pulse interrupts, respectively. Assuming the interrupt signal is initially inactive (logic low), the following sequence of events explains the handling of level and pulse interrupts:

1. On a rising edge event of the interrupt signal, the NVIC registers the interrupt request. The interrupt is now in the pending state, which means the interrupt requests have not yet been serviced by the CPU.
2. The NVIC then sends the exception number along with the interrupt request signal to the CPU. When the CPU starts executing the ISR, the pending state of the interrupt is cleared.
3. When the ISR is being executed by the CPU, one or more rising edges of the interrupt signal are logged as a single pending request. The pending interrupt is serviced again after the current ISR execution is complete (see Figure 5-4 for pulse interrupts).
4. If the interrupt signal is still high after completing the ISR, it will be pending and the ISR is executed again. Figure 5-3 illustrates this for level triggered interrupts, where the ISR is executed as long as the interrupt signal is high.

5.3.3 Exception Vector Table

The exception vector table (Table 5-1), stores the entry point addresses for all exception handlers. The CPU fetches the appropriate address based on the exception number.

Table 5-1. Exception Vector Table

Exception Number	Exception	Exception Priority	Vector Address
–	Initial Stack Pointer Value	Not applicable (NA)	Base_Address - 0x00000000 (start of flash memory) or 0x20000000 (start of SRAM)
1	Reset	–3, the highest priority	Base_Address + 0x04
2	Non Maskable Interrupt (NMI)	–2	Base_Address + 0x08
3	HardFault	–1	Base_Address + 0x0C
4-10	Reserved	NA	Base_Address + 0x10 to Base_Address + 0x28
11	Supervisory Call (SVCall)	Configurable (0 - 3)	Base_Address + 0x2C
12-13	Reserved	NA	Base_Address + 0x30 to Base_Address + 0x34
14	PendSupervisory (PendSV)	Configurable (0 - 3)	Base_Address + 0x38
15	System Timer (SysTick)	Configurable (0 - 3)	Base_Address + 0x3C
16	External Interrupt(IRQ0)	Configurable (0 - 3)	Base_Address + 0x40
…	…	Configurable (0 - 3)	…
31	External Interrupt(IRQ15)	Configurable (0 - 3)	Base_Address + 0x7C

In Table 5-1, the first word (4 bytes) is not marked as exception number zero. This is because the first word in the exception table is used to initialize the main stack pointer (MSP) value on device reset; it is not considered as an exception. The vector table can be located anywhere in the memory map (flash or SRAM) by modifying the Vector Table Offset Register (VTOR). This register is part of the System Control Space of CM0+ located at 0xE000ED08. This register takes bits 31:8 of the vector table address; bits 7:0 are reserved. Therefore, the vector table address should be 256 bytes aligned.The advantage of moving the vector table to SRAM is that the exception handler addresses can be dynamically changed by modifying the SRAM vector table contents. However, the nonvolatile flash memory vector table must be modified by a flash memory write.

Reads of flash addresses 0x00000000 and 0x00000004 are redirected to the first eight bytes of SROM to fetch the stack pointer and reset vectors, unless the DIS_RESET_VECT_REL bit of the CPUSS_SYSREQ register is set. The default value of this bit at reset is 0 ensuring that reset vector is always fetched from SROM. To allow flash read from addresses 0x00000000 and 0x00000004, the DIS_RESET_VECT_REL bit should be set to ‘1’. The stack pointer vector holds the address that the stack pointer is loaded with on reset. The reset vector holds the address of the boot sequence. This mapping is done to use the default addresses for the stack pointer and reset vector from SROM when the device reset is released. For reset, boot code in SROM is executed first and then the CPU jumps to address 0x00000004 in flash to execute the handler in flash. The reset exception address in the SRAM vector table is never used.

Also, when the SYSREQ bit of the CPUSS_SYSREQ register is set, reads of flash address 0x00000008 are redirected to SROM to fetch the NMI vector address instead of from flash. Reset CPUSS_SYSREQ to read the flash at address 0x00000008.

The exception sources (exception numbers 1 to 15) are explained in 5.4 Exception Sources. The exceptions marked as Reserved in Table 5-1 are not used, although they have addresses reserved for them in the vector table. The interrupt sources (exception numbers 16 to 31) are explained in 5.5 Interrupt Sources.

5.4 Exception Sources

This section explains the different exception sources listed in Table 5-1 (exception numbers 1 to 15).

5.4.1 Reset Exception

Device reset is treated as an exception in PSoC 4. It is always enabled with a fixed priority of –3, the highest priority exception. A device reset can occur due to multiple reasons, such as power-on-reset (POR), external reset signal on XRES pin, or watchdog reset. When the device is reset, the initial boot code for configuring the device is executed out of supervisory read-only memory (SROM). The boot code and other data in SROM memory are programmed by Cypress, and are not read/write accessible to external users. After completing the SROM boot sequence, the CPU code execution jumps to flash memory. Flash memory address 0x00000004 (Exception#1 in Table 5-1) stores the location of the startup code in flash memory. The CPU starts executing code out of this address. Note that the reset exception address in the SRAM vector table will never be used

because the device comes out of reset with the flash vector table selected. The register configuration to select the SRAM vector table can be done only as part of the startup code in flash after the reset is de-asserted.

5.4.2 Non-Maskable Interrupt (NMI) Exception

Non-maskable interrupt (NMI) is the highest priority exception other than reset. It is always enabled with a fixed priority of –2. There are two ways to trigger an NMI exception in the device:

- **NMI exception by setting NMIPENDSET bit (user NMI exception):** An NMI exception can be triggered in software by setting the NMIPENDSET bit in the interrupt control state register (CM0P_ICSR register). Setting this bit will execute the NMI handler pointed to by the active vector table (flash or SRAM vector table).
- **System Call NMI exception:** This exception is used for nonvolatile programming operations such as flash write operation and flash checksum operation. It is triggered by setting the SYSCALL_REQ bit in the CPUSS_SYSREQ register. An NMI exception triggered by SYSCALL_REQ bit always executes the NMI exception handler code that resides in SROM. Flash or SRAM exception vector table is not used for system call NMI exception. The NMI handler code in SROM is not read/write accessible because it contains nonvolatile programming routines that should not be modified by the user.

5.4.3 HardFault Exception

HardFault is an always-enabled exception that occurs because of an error during normal or exception processing. HardFault has a fixed priority of –1, meaning it has higher priority than any exception with configurable priority. HardFault exception is a catch-all exception for different types of fault conditions, which include executing an undefined instruction and accessing an invalid memory addresses. The CM0+ CPU does not provide fault status information to the HardFault exception handler, but it does permit the handler to perform an exception return and continue execution in cases where software has the ability to recover from the fault situation.

5.4.4 Supervisor Call (SVCall) Exception

Supervisor Call (SVCall) is an always-enabled exception caused when the CPU executes the SVC instruction as part of the application code. Application software uses the SVC instruction to make a call to an underlying operating system and provide a service. This is known as a supervisor call. The SVC instruction enables the application to issue a supervisor call that requires privileged access to the system. Note that the CM0+ in PSoC 4 uses a privileged mode for the system call NMI exception, which is not related to the SVCall exception. (See the Chip Operational Modes chapter on page 66 for details on privileged mode.) There is no other privileged mode support for SVCall at the architecture level in the device. The application developer must define the SVCall exception handler according to the end application requirements.

The priority of a SVCall exception can be configured to a value between 0 and 3 by writing to the two bit fields PRI_11[31:30] of the System Handler Priority Register 2 (SHPR2). When the SVC instruction is executed, the SVCall exception enters the pending state and waits to be serviced by the CPU. The SVCALLPENDED bit in the System Handler Control and State Register (SHCSR) can be used to check or modify the pending status of the SVCall exception.

5.4.5 PendSV Exception

PendSV is another supervisor call related exception similar to SVCall, normally being software-generated. PendSV is always enabled and its priority is configurable. The PendSV exception is triggered by setting the PENDSVSET bit in the Interrupt Control State Register, CM0P_ICSR. On setting this bit, the PendSV exception enters the pending state, and waits to be serviced by the CPU. The pending state of a PendSV exception can be cleared by setting the PENDSVCLR bit in the Interrupt Control State Register, CM0P_ICSR. The priority of a PendSV exception can be configured to a value between 0 and 3 by writing to the two bit fields PRI_14[23:22] of the System Handler Priority Register 3 (CM0P_SHPR3). See the Armv6-M Architecture Reference Manual for more details.

5.4.6 SysTick Exception

CM0+ CPU in PSoC 4 supports a system timer, referred to as SysTick, as part of its internal architecture. SysTick provides a simple, 24-bit decrementing counter for various timekeeping purposes such as an RTOS tick timer, high-speed alarm timer, or simple counter. The SysTick timer can be configured to generate an interrupt when its count value reaches zero, which is referred to as SysTick exception. The exception is enabled by setting the TICKINT bit in the SysTick Control and Status Register (CM0P_SYST_CSR). The priority of a SysTick exception can be configured to a value between 0 and 3 by writing to the two bit fields PRI_15[31:30] of the System Handler Priority Register 3 (SHPR3). The SysTick exception can always be generated in software at any instant by writing a one to the PENDSTSETb bit in the Interrupt Control State Register, CM0P_ICSR. Similarly, the pending state of the SysTick exception can be cleared by writing a one to the PENDSTCLR bit in the Interrupt Control State Register, CM0P_ICSR.

5.5 Interrupt Sources

PSoC 4 supports 16 interrupts (IRQ0 to IRQ15 or exception numbers 16 – 31) from peripherals. The source of each interrupt is listed in Table 5-2. PSoC 4 provides flexible sourcing options for each interrupt line. The interrupts include standard interrupts from the on-chip peripherals such as TCPWM and serial communication block. The interrupt generated is usually the logical OR of the different peripheral states. The peripheral status register should be read in the ISR to detect which condition generated the interrupt. interrupts are usually level interrupts, which require that the peripheral status register be read in the ISR to clear the interrupt. If the status register is not read in the ISR, the interrupt will remain asserted and the ISR will be executed continuously.

See the I/O System chapter on page 36 for details on GPIO interrupts.

Table 5-2. List of PSoC 4 Interrupt Sources

Interrupt	Cortex-M0+ Exception No.	Interrupt Source
NMI	2	SYS_REQ
IRQ0	16	GPIO Interrupt - Port 0
IRQ1	17	GPIO Interrupt - Port 1
IRQ2	18	GPIO Interrupt - Port 2
IRQ3	19	GPIO Interrupt - Port 3
IRQ4	20	GPIO Interrupt - All Port
IRQ5	21	LPCOMP (low-power comparator)
IRQ6	22	WDT (Watchdog timer)
IRQ7	23	SCB0 (Serial Communication Block 0)
IRQ8	24	SCB1 (Serial Communication Block 1)
IRQ9	25	SPCIF Interrupt
IRQ10	26	CSD (CapSense)
IRQ11	27	TCPWM0 (Timer/Counter/PWM 0)
IRQ12	28	TCPWM1 (Timer/Counter/PWM 1)
IRQ13	29	TCPWM2 (Timer/Counter/PWM 2)
IRQ14	30	TCPWM3 (Timer/Counter/PWM 3)
IRQ15	31	TCPWM4 (Timer/Counter/PWM 4)

5.6 Exception Priority

Exception priority is useful for exception arbitration when there are multiple exceptions that need to be serviced by the CPU. PSoC 4 provides flexibility in choosing priority values for different exceptions. All exceptions other than Reset, NMI, and HardFault can be assigned a configurable priority level. The Reset, NMI, and HardFault exceptions have a fixed priority of –3, –2, and –1 respectively. In PSoC 4, lower priority numbers represent higher priorities. This means that the Reset, NMI, and HardFault exceptions have the highest priorities. The other exceptions can be assigned a configurable priority level between 0 and 3.

PSoC 4 supports nested exceptions in which a higher priority exception can obstruct (interrupt) the currently active exception handler. This pre-emption does not happen if the incoming exception priority is the same as active exception. The CPU resumes execution of the lower priority exception handler after servicing the higher priority exception. The CM0+ CPU in PSoC 4 allows nesting of up to four exceptions. When the CPU receives two or more exceptions requests of the same priority, the lowest exception number is serviced first.

The registers to configure the priority of exception numbers 1 to 15 are explained in “Exception Sources” on page 29.

The priority of the 16 interrupts (IRQ0 to IRQ15) can be configured by writing to the Interrupt Priority registers (CM0P_IPR). This is a group of 32-bit registers with each register storing the priority values of four interrupts, as given in Table 5-3. The other bit fields in the register are not used.

Table 5-3. Interrupt Priority Register Bit Definitions

Bits	Name	Description
7:6	PRI_N0	Priority of interrupt number N.
15:14	PRI_N1	Priority of interrupt number N+1.
23:22	PRI_N2	Priority of interrupt number N+2.
31:30	PRI_N3	Priority of interrupt number N+3.

5.7 Enabling and Disabling Interrupts

The NVIC provides registers to individually enable and disable the 16 interrupts in software. If an interrupt is not enabled, the NVIC will not process the interrupt requests on that interrupt line. The Interrupt Set-Enable Register (CM0P_ISER) and the Interrupt Clear-Enable Register (CM0P_ICER) are used to enable and disable the interrupts respectively. These are 32-bit wide registers and each bit corresponds to the same numbered interrupt. These registers can also be read in software to get the enable status of the interrupts. Table 5-4 shows the register access properties for these two registers. Note that writing zero to these registers has no effect.

Table 5-4. Interrupt Enable/Disable Registers

Register	Operation	Bit Value	Comment
Interrupt Set Enable Register (CM0P_ISER)	Write	1	To enable the interrupt
		0	No effect
	Read	1	Interrupt is enabled
		0	Interrupt is disabled
Interrupt Clear Enable Register (CM0P_ICER)	Write	1	To disable the interrupt
		0	No effect
	Read	1	Interrupt is enabled
		0	Interrupt is disabled

The CM0P_ISER and CM0P_ICER registers are applicable only for interrupts IRQ0 to IRQ15. These registers cannot be used to enable or disable the exception numbers 1 to 15. The 15 exceptions have their own support for enabling and disabling, as explained in “Exception Sources” on page 29.

The PRIMASK register in Cortex-M0+ (CM0+) CPU can be used as a global exception enable register to mask all the configurable priority exceptions irrespective of whether they are enabled. Configurable priority exceptions include all the exceptions except Reset, NMI, and HardFault listed in Table 5-1. They can be configured to a priority level between 0 and 3, 0 being the highest priority and 3 being the lowest priority. When the PM bit (bit 0) in the PRIMASK register is set, none of the configurable priority exceptions can be serviced by the CPU, though they can be in the pending state waiting to be serviced by the CPU after the PM bit is cleared.

5.8 Exception States

Each exception can be in one of the following states.

Table 5-5. Exception States

Exception State	Meaning
Inactive	The exception is not active or pending. Either the exception is disabled or the enabled exception has not been triggered.
Pending	The exception request is received by the CPU/NVIC and the exception is waiting to be serviced by the CPU.
Active	An exception that is being serviced by the CPU but whose exception handler execution is not yet complete. A high-priority exception can interrupt the execution of lower priority exception. In this case, both the exceptions are in the active state.
Active and Pending	The exception is serviced by the processor and there is a pending request from the same source during its exception handler execution.

The Interrupt Control State Register (CM0P_ICSR) contains status bits describing the various exceptions states.

- The VECTACTIVE bits ([8:0]) in the CM0P_ICSR store the exception number for the current executing exception. This value is zero if the CPU does not execute any exception handler (CPU is in thread mode). Note that the value in VECTACTIVE bit fields is the same as the value in bits [8:0] of the Interrupt Program Status Register (IPSR), which is also used to store the active exception number.
- The VECTPENDING bits ([20:12]) in the CM0P_ICSR store the exception number of the highest priority pending exception. This value is zero if there are no pending exceptions.
- The ISRPENDING bit (bit 22) in the CM0P_ICSR indicates if a NVIC generated interrupt (IRQ0 to IRQ15) is in a pending state.

5.8.1 Pending Exceptions

When a peripheral generates an interrupt request signal to the NVIC or an exception event occurs, the corresponding exception enters the pending state. When the CPU starts executing the corresponding exception handler routine, the exception is changed from the pending state to the active state.

The NVIC allows software pending of the 16 interrupt lines by providing separate register bits for setting and clearing the pending states of the interrupts. The Interrupt Set-Pending register (CM0P_ISPR) and the Interrupt Clear-Pending register (CM0P_ICPR) are used to set and clear the pending status of the interrupt lines. These are 32-bit wide registers and each bit corresponds to the same numbered interrupt.

Table 5-6 shows the register access properties for these two registers. Note that writing zero to these registers has no effect.

Table 5-6. Interrupt Set Pending/Clear Pending Registers

Register	Operation	Bit Value	Comment
Interrupt Set-Pending Register (CM0P_ISPR)	Write	1	To put an interrupt to pending state
		0	No effect
	Read	1	Interrupt is pending
		0	Interrupt is not pending
Interrupt Clear-Pending Register (CM0P_ICPR)	Write	1	To clear a pending interrupt
		0	No effect
	Read	1	Interrupt is pending
		0	Interrupt is not pending

Setting the pending bit when the same bit is already set results in only one execution of the ISR. The pending bit can be updated regardless of whether the corresponding interrupt is enabled. If the interrupt is not enabled, the interrupt line will not move to the pending state until it is enabled by writing to the CM0P_ISER register.

Note that the CM0P_ISPR and CM0P_ICPR registers are used only for the 16 peripheral interrupts (exception numbers 16–31). These registers cannot be used for pending the exception numbers 1 to 15. These 15 exceptions have their own support for pending, as explained in “Exception Sources” on page 29.

5.9 Stack Usage for Exceptions

When the CPU executes the main code (in thread mode) and an exception request occurs, the CPU stores the state of its general-purpose registers in the stack. It then starts executing the corresponding exception handler (in handler mode). The CPU pushes the contents of the eight 32-bit internal registers into the stack. These registers are the Program and Status Register (PSR), ReturnAddress, Link Register (LR or R14), R12, R3, R2, R1, and R0. Cortex-M0+ has two stack pointers - MSP and PSP. Only one of the stack pointers can be active at a time. When in thread mode, the Active Stack Pointer bit in the Control register is used to define the current active stack pointer. When in handler mode, the MSP is always used as the stack pointer. The stack pointer in Cortex-M0+ always grows downwards and points to the address that has the last pushed data.

When the CPU is in thread mode and an exception request comes, the CPU uses the stack pointer defined in the control register to store the general-purpose register contents. After the stack push operations, the CPU enters handler mode to execute the exception handler. When another higher priority exception occurs while executing the current exception, the MSP is used for stack push/pop operations, because the CPU is already in handler mode. See the Cortex-M0+ CPU chapter on page 22 for details.

The Cortex-M0+ uses two techniques, tail chaining and late arrival, to reduce latency in servicing exceptions. These techniques are not visible to the external user and are part of the internal processor architecture. For information on tail chaining and late arrival mechanism, visit the Cortex-M0+Devices User Guide.

5.10 Interrupts and Low-Power Modes

PSoC 4 allows device wakeup from low-power modes when certain peripheral interrupt requests are generated. The Wakeup Interrupt Controller (WIC) block generates a wakeup signal that causes the device to enter Active mode when one or more wakeup sources generate an interrupt signal. After entering Active mode, the ISR of the peripheral interrupt is executed.

The Wait For Interrupt (WFI) instruction, executed by the CM0+ CPU, triggers the transition into Sleep and Deep-Sleep modes. The sequence of entering the different low-power modes is detailed in the Power Modes chapter on page 67. Chip low-power modes have two categories of fixed-function interrupt sources:

- Fixed-function interrupt sources that are available only in the Active and Deep-Sleep modes (watchdog timer interrupt,)
- Fixed-function interrupt sources that are available only in the Active mode (all other fixed-function interrupts)

5.11 Exceptions – Initialization and Configuration

This section covers the different steps involved in initializing and configuring exceptions in PSoC 4.

1. Configuring the Exception Vector Table Location: The first step in using exceptions is to configure the vector table location as required – either in flash memory or SRAM. This configuration is done by writing bits 31:28 of the VTOR register with the value of the flash or SRAM address at which the vector table will reside This register write is done as part of device initialization code.

   It is recommended that the vector table be available in SRAM if the application needs to change the vector addresses dynamically. If the table is located in flash, then a flash write operation is required to modify the vector table contents. PSoC Creator IDE uses the vector table in SRAM by default.
2. Configuring Individual Exceptions: The next step is to configure individual exceptions required in an application.
   a. Configure the exception or interrupt source; this includes setting up the interrupt generation conditions. The register configuration depends on the specific exception required.
   b. Define the exception handler function and write the address of the function to the exception vector table. Table 5-1 gives the exception vector table format; the exception handler address should be written to the appropriate exception number entry in the table.
   c. Set up the exception priority, as explained in “Exception Priority” on page 31.
   d. Enable the exception, as explained in “Enabling and Disabling Interrupts” on page 32.

5.12 Registers

Table 5-7. List of Registers

Register Name	Description
CM0P_ISER	Interrupt Set-Enable Register
CM0P_ICER	Interrupt Clear Enable Register
CM0P_ISPR	Interrupt Set-Pending Register
CM0P_ICPR	Interrupt Clear-Pending Register
CM0P_IPR	Interrupt Priority Registers
CM0P_ICSR	Interrupt Control State Register
CM0P_AIRCR	Application Interrupt and Reset Control Register
CM0P_SCR	System Control Register
CM0P_CCR	Configuration and Control Register
CM0P_SHPR2	System Handler Priority Register 2
CM0P_SHPR3	System Handler Priority Register 3
CM0P_SHCSR	System Handler Control and State Register
CM0P_SYST_CSR	Systick Control and Status Register
CPUSS_CONFIG	CPU Subsystem Configuration Register
CPUSS_SYSREQ	System Request Register

5.13 Associated Documents

- Armv6-M Architecture Reference Manual – This document explains the Arm Cortex-M0+ architecture, including the instruction set, NVIC architecture, and CPU register descriptions.

Section C: System Resources Subsystem (SRSS)

This section encompasses the following chapters:

- I/O System chapter on page 36
- Clocking System chapter on page 56
- Power Supply and Monitoring chapter on page 63
- Chip Operational Modes chapter on page 66
- Power Modes chapter on page 67
- Watchdog Timer chapter on page 71
- Reset System chapter on page 74
- Device Security chapter on page 76

Top Level Architecture

System Resource Subsystem Block Diagram

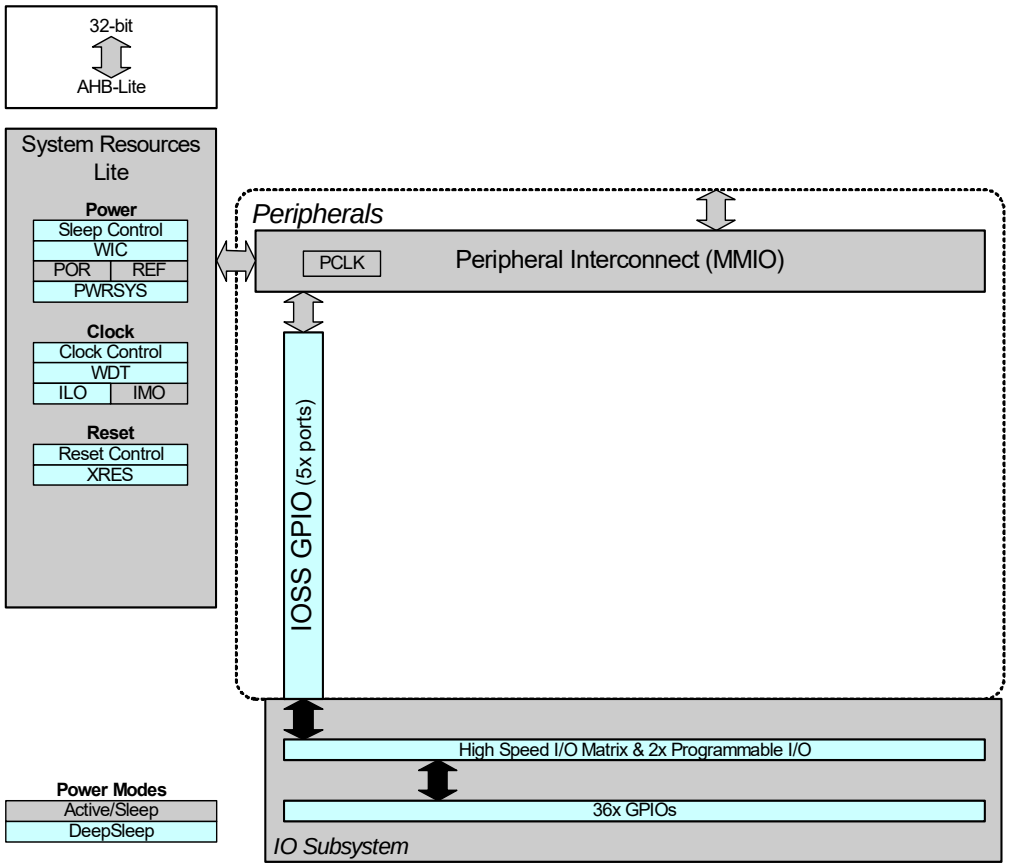

6. I/O System

This chapter explains the PSoC® 4 I/O system, its features, architecture, operating modes, and interrupts. The GPIO pins in PSoC 4 are grouped into ports; a port can have a maximum of eight GPIOs. The PSoC 4000S family has a maximum of 36 GPIOs arranged in five ports.

6.1 Features

The PSoC 4 GPIOs have these features:

- Analog and digital input and output capabilities
- Eight drive strength modes
- Edge-triggered interrupts on rising edge, falling edge, or on both the edges, on pin basis
- Slew rate control
- Hold mode for latching previous state (used for retaining I/O state in Deep-Sleep mode)
- Selectable CMOS and low-voltage LVTTL input buffer mode
- Smart I/O block provides the ability to perform Boolean functions in the I/O signal path
- CapSense support
- Segment LCD drive support
- Two analog mux buses (AMUXBUS-A and AMUXBUS-B) that can be used to multiplex analog signals

6.2 GPIO Interface Overview

PSoC 4 is equipped with analog and digital peripherals. Figure 6-1 shows an overview of the routing between the peripherals and pins.

Figure 6-1. GPIO Interface Overview

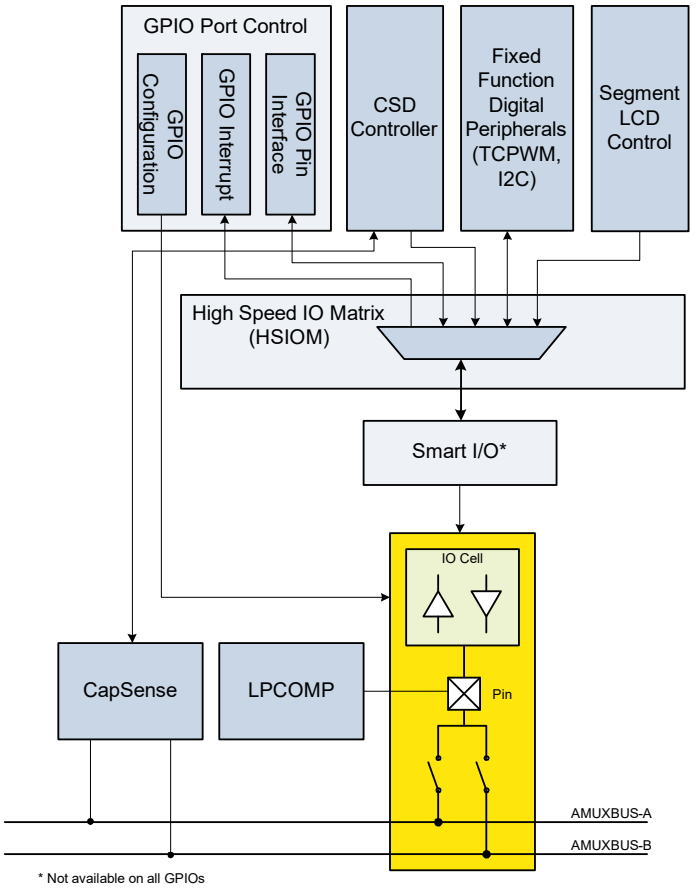

GPIO pins are connected to I/O cells. These cells are equipped with an input buffer for the digital input, providing high input impedance and a driver for the digital output signals. The digital peripherals connect to the I/O cells via the high-speed I/O matrix (HSIOM). HSIOM contains multiplexers to connect between a peripheral selected by the user and the pin. Some port pins have a Smart I/O block between the HSIOM and the pins. The Smart I/O block enables logical operations on the pin signal. The analog peripheral and analog mux bus connections are done in the GPIO cell directly. The CapSense block is connected to the GPIO pins through the AMUX buses.

6.3 I/O Cell Architecture

Figure 6-2 shows the I/O cell architecture. It comprises of an input buffer and an output driver. This architecture is present in every GPIO cell. It connects to the HSIOM multiplexers/Smart I/O block for the digital input and the output signal.

Figure 6-2. GPIO Block Diagram

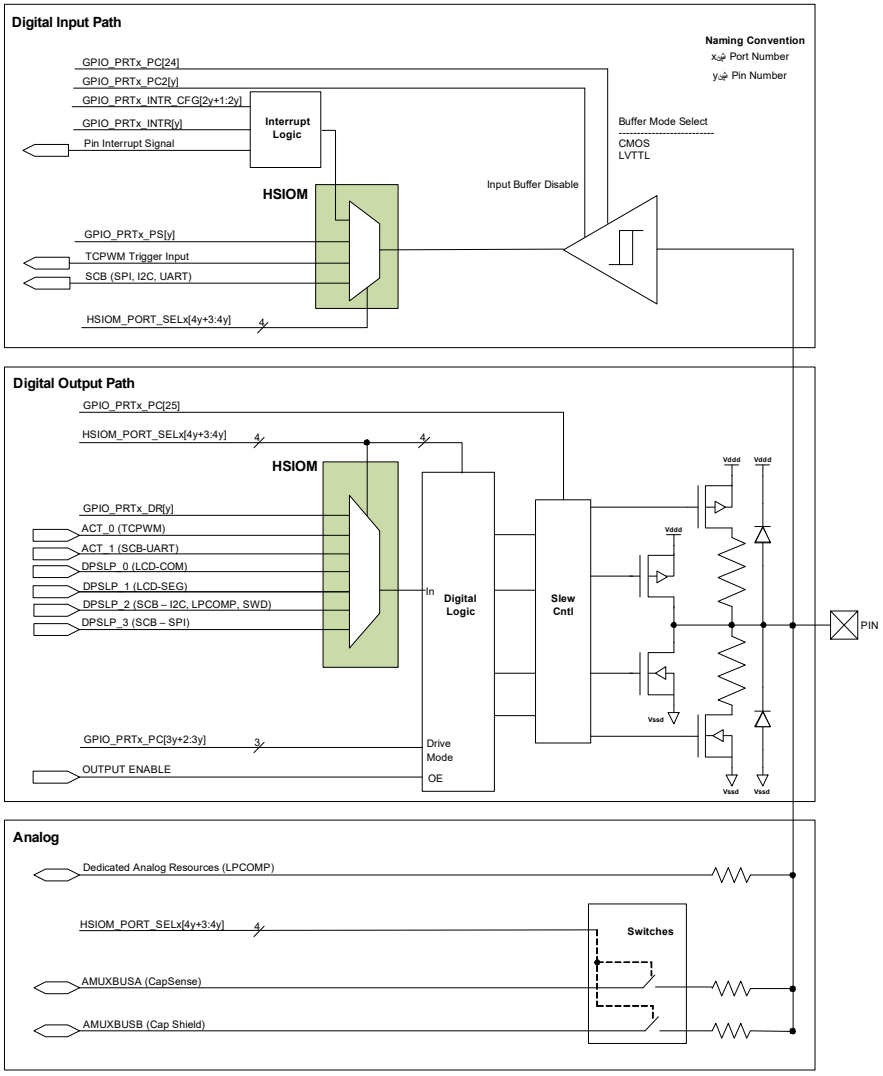

6.3.1 Digital Input Buffer

The digital input buffer provides a high-impedance buffer for the external digital input. The buffer is enabled and disabled by the INP_DIS bit of the Port Configuration Register 2 (GPIO_PRTx_PC2, where x is the port number). The buffer is configurable for the following modes:

- CMOS
- LVTTL

These buffer modes are selected by the PORT_VTRIP_SEL bit (GPIO_PRTx_PC[24])of the Port Configuration register.

Table 6-1. Input Buffer Modes

PORT_VTRIP_SEL	Input Buffer Mode
0b	CMOS
1b	LVTTL

The threshold values for each mode can be obtained from the device datasheet. The output of the input buffer is connected to the HSIOM for routing to the selected peripherals. Writing to the HSIOM port select register (HSIOM_PORT_SELx) selects the peripheral. The digital input peripherals in the HSIOM, shown in , are pin dependent. See the device datasheet to know the functions available for each pin.

6.3.2 Digital Output Driver

Pins are driven by the digital output driver. It consists of circuitry to implement different drive modes and slew rate control for the digital output signals. The peripheral connects to the digital output driver through the HSIOM; a particular peripheral is selected by writing to the HSIOM port select register (HSIOM_PORT_SELx).

In PSoC 4000S I/Os are driven with V_{DDD} supply. Each GPIO pin has ESD diodes to clamp the pin voltage to the V_{DDD} source. Ensure that the voltage at the pin does not exceed the I/O supply voltage V_{DDD} and drop below V_{SSD}. For the absolute maximum and minimum GPIO voltage, see the device datasheet. The digital output driver can be enabled and disabled using the DSI signal from the peripheral or data register (GPIO_PRTx_DR) associated with the output pin. See 6.4 High-Speed I/O Matrix to know about the peripheral source selection for the data and to enable or disable control source selection.

6.3.2.1 Drive Modes

Each I/O is individually configurable into one of eight drive modes using the Port Configuration register, GPIO_PRTx_PC. Table 6-2 lists the drive modes. Figure 6-2 is a simplified output driver diagram that shows the pin view based on each of the eight drive modes.

Table 6-2. Drive Mode Settings

GPIO_PRTx_PC ('x' denotes port number and 'y' denotes pin number)				
Bits	**Drive Mode**	**Value**	**Data = 1**	**Data = 0**
3y+2: 3y	SEL'y'	Selects Drive Mode for Pin 'y' ($0 \le y \le 7$)		
	High-Impedance Analog	0	High Z	High Z
	High-impedance Digital	1	High Z	High Z
	Resistive Pull Up	2	Weak 1	Strong 0
	Resistive Pull Down	3	Strong 1	Weak 0
	Open Drain, Drives Low	4	High Z	Strong 0
	Open Drain, Drives High	5	Strong 1	High Z
	Strong Drive	6	Strong 1	Strong 0
	Resistive Pull Up and Down	7	Weak 1	Weak 0

Figure 6-3. I/O Drive Mode Block Diagram

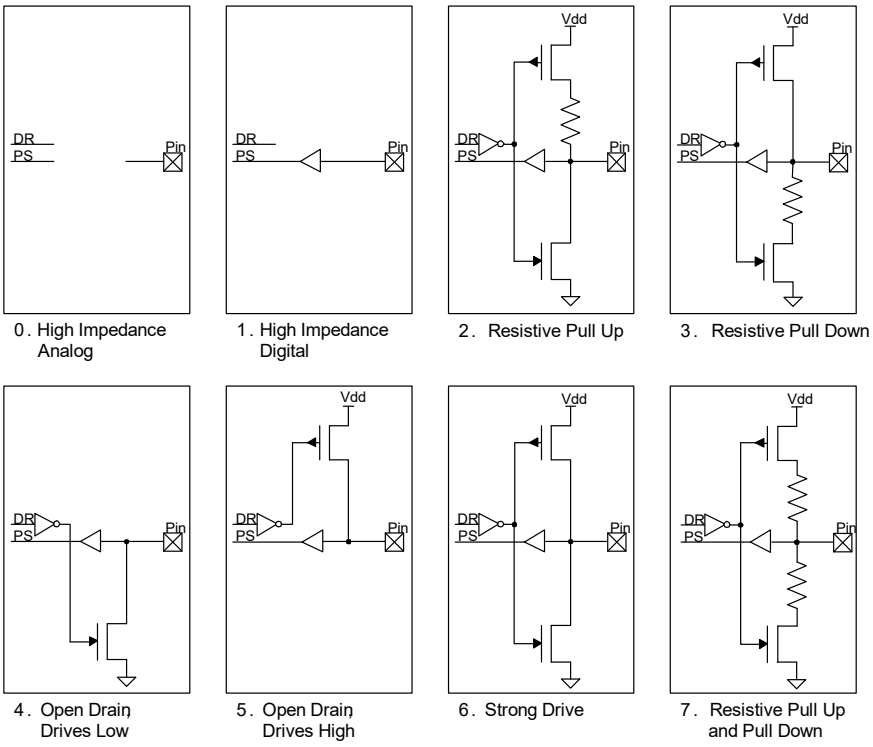

- High-Impedance Analog

High-impedance analog mode is the default reset state; both output driver and digital input buffer are turned off. This state prevents an external voltage from causing a current to flow into the digital input buffer. This drive mode is recommended for pins that are floating or that support an analog voltage. High-impedance analog pins cannot be used for digital inputs. Reading the pin state register returns a 0x00 regardless of the data register value. To achieve the lowest device current in low-power modes, unused GPIOs must be configured to the high-impedance analog mode.

- High-Impedance Digital

High-impedance digital mode is the standard high-impedance (High Z) state recommended for digital inputs. In this state, the input buffer is enabled for digital input signals.

- Resistive Pull-Up or Resistive Pull-Down

Resistive modes provide a series resistance in one of the data states and strong drive in the other. Pins can be used for either digital input or digital output in these modes. If resistive pull-up is required, a ‘1’ must be written to that pin’s Data Register bit. If resistive pull-down is required, a ‘0’ must be written to that pin’s Data Register. Interfacing mechanical switches is a common application of these drive modes. The resistive modes are also used to interface PSoC with open drain drive lines. Resistive pull-up is used when input is open drain low and resistive pull-down is used when input is open drain high.

- Open Drain Drives High and Open Drain Drives Low

Open drain modes provide high impedance in one of the data states and strong drive in the other. The pins can be used as digital input or output in these modes. Therefore, these modes are widely used in bi-directional digital communication. Open drain drive high mode is used when signal is externally pulled down and open drain drive low is used when signal is externally pulled high. A common application for open drain drives low mode is driving I^2C bus signal lines.

- Strong Drive

The strong drive mode is the standard digital output mode for pins; it provides a strong CMOS output drive in both high and low states. Strong drive mode pins must not be used as inputs under normal circumstances. This mode is often used for digital output signals or to drive external transistors.

- Resistive Pull-Up and Resistive Pull-Down

In the resistive pull-up and resistive pull-down mode, the GPIO will have a series resistance in both logic 1 and logic 0 output states. The high data state is pulled up while the low data state is pulled down. This mode is used when the bus is driven by other signals that may cause shorts.

6.3.2.2 Slew Rate Control

GPIO pins have fast and slow output slew rate options in strong drive mode; this is configured using PORT_SLOW bit of the Port Configuration register (GPIO_PRTx_PC[25]). Slew rate is individually configurable for each port. This bit is cleared by default and the port works in fast slew mode. This bit can be set if a slow slew rate is required. Slower slew rate results in reduced EMI and crosstalk; hence, the slow option is recommended for low-frequency signals or signals without strict timing constraints.

6.4 High-Speed I/O Matrix

The high-speed I/O matrix (HSIOM) is a group of high-speed switches that routes GPIOs to the peripherals inside the device. As the GPIOs are shared for multiple functions, HSIOM multiplexes the pin and connects to a particular peripheral selected by the user. PSoC 4000S, the Smart I/O block bridges the Port 2 and Port 3 pins to the HSIOM. Other ports connect directly to the HSIOM.The HSIOM_PORT_SELx register is provided to select the peripheral. It is a 32-bit wide register available for each port, with each pin occupying four bits. This register provides up to 16 different options for a pin as listed in Table 6-3.

Table 6-3. PSoC 4000S HSIOM Port Settings

HSIOM_PORT_SELx ('x' denotes port number and 'y' denotes pin number)			
Bits	**Name (SEL'y')**	**Value**	**Description (Selects pin 'y' source (0 ≤ y ≤ 7))**
4y+3 : 4y	DR	0	Pin is regular firmware-controlled I/O or connected to dedicated hardware block.
	CSD_SENSE	4	Pin is a CSD sense pin (analog mode).
	CSD_SHIELD	5	Pin is a CSD shield pin (analog mode).
	AMUXA	6	Pin is connected to AMUXBUS-A.
	AMUXB	7	Pin is connected to AMUXBUS-B. This mode is also used for CSD I/O charging. When CSD I/O charging is enabled in CSD_CONTROL, the digital I/O driver is connected to csd_charge signal (the pin is still connected to AMUXBUS-B).
	ACTIVE_0	8	Pin-specific Active source #0 (TCPWM Output).
	ACTIVE_1	9	Pin-specific Active source #1 (SCB-UART).
	ACTIVE_2	10	Pin-specific Active source #2 (Reserved).
	ACTIVE_3	11	Pin-specific Active source #3 (TCPWM Input).
	DEEP_SLEEP_0	12	Pin-specific Deep-Sleep source #0 (LCD - COM).
	DEEP_SLEEP_1	13	Pin-specific Deep-Sleep source #1 (LCD - SEG).
	DEEP_SLEEP_2	14	Pin-specific Deep-Sleep source #2 (SCB-I^2C, SWD, LPCOMP).
	DEEP_SLEEP_3	15	Pin-specific Deep-Sleep source #3 (SCB-SPI).

Note The Active and Deep-Sleep sources are pin dependent. See the “Pinouts” section of the device datasheet for more details on the features supported by each pin.

6.5 Smart I/O

The Smart I/O block adds programmable logic to an I/O port. This programmable logic integrates board-level Boolean logic functionality such as AND, OR, and XOR into the port. The Smart I/O block has these features:

- Integrate board-level Boolean logic functionality into a port
- Ability to preprocess HSIOM input signals from the GPIO port pins
- Ability to post-process HSIOM output signals to the GPIO port pins
- Support in all device power modes
- Integrate closely to the I/O pads, providing shortest signal paths with programmability

The PSoC 4000S supports Smart I/O on two ports – Port 2 and Port 3. The register nomenclature 'PRGIO_PRT0' denotes Port 2 Smart I/O registers and 'PRGIO_PRT1' denotes Port 3 Smart I/O registers. For a general Smart I/O register description, the 'PRGIO_PRTx' nomenclature will be used.

6.5.1 Overview

The Smart I/O block is positioned in the signal path between the HSIOM and the I/O port. The HSIOM multiplexes the output signals from fixed-function peripherals and CPU to a specific port pin and vice-versa. The Smart I/O block is placed on this signal path, acting as a bridge that can process signals from port pins and HSIOM, as shown in Figure 6-4.

Figure 6-4. Smart I/O Interface

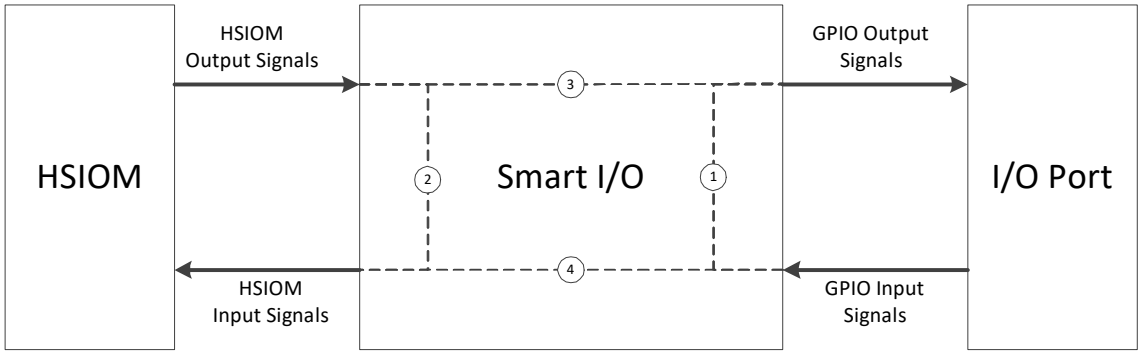

The signal paths supported through the Smart I/O block as shown in Figure 6-4 are as follows:

1. Implement self-contained logic functions that directly operate on port I/O signals
2. Implement self-contained logic functions that operate on HSIOM signals or a combination of both
3. Operate on and modify HSIOM output signals and route the modified signals to port I/O signals
4. Operate on and modify port I/O signals and route the modified signals to HSIOM input signals

The following sections discuss the Smart I/O block components, routing, and configuration in detail. In these sections, GPIO signals (io_data) refer to the input/output signals from the I/O port; device or chip (chip_data) signals refer to the input/output signals from HSIOM.

6.5.2 Block Components

The internal logic of the Smart I/O includes these components:

- Clock/reset component
- Synchronizers
- LUT3 components
- Data unit component

6.5.2.1 Clock and Reset

The clock and reset component selects the Smart I/O block's clock (clk_block) and reset signal (rst_block_n). A single clock and reset signal is used for all components in the block. The clock and reset sources are determined by the CLOCK_SRC[4:0] bit field of the PRGIO_PRTx_CTL register. The selected clock is used for the synchronous logic in the block components, which includes the I/O input synchronizers, LUT, and data unit components. The selected reset is used to asynchronously reset the synchronous logic in the LUT and data unit components.

Note that the selected clock (clk_block) for the block's synchronous logic is not phase-aligned with other synchronous logic in the device, operating on the same clock. Therefore, communication between Smart I/O and other synchronous logic should be treated as asynchronous.

The following clock sources are available for selection:

- GPIO input signals "io_data_in[7:0]". These clock sources have no associated reset.
- HSIOM output signals "chip_data[7:0]". These clock sources have no associated reset.
- The Smart I/O clock (clk_prgio). This is derived from the system clock (clk_sys) using a peripheral clock divider. See the Clocking System chapter on page 56 for details on peripheral clock dividers. This clock is only available in Active and Sleep power modes. The clock can have one out of two associated resets: rst_sys_act_n and rst_sys_dpslp_n. These resets determine in which system power modes the block synchronous state is reset; for example, rst_sys_act_n is intended for Smart I/O synchronous functionality in the Active power mode and reset is activated in the Deep-Sleep power mode.
- The low-frequency (40 kHz) system clock (clk_lf). This clock is available in Deep-Sleep power mode. This clock has an associated reset, rst_lf_dpslp_n.

When the block is enabled, the selected clock (clk_block) and associated reset (rst_block_n) are released to the fabric components. When the fabric is disabled, no clock is released to the fabric components and the reset is activated (the LUT and data unit components are set to the reset value of '0').

The I/O input synchronizers introduce a delay of two clk_block cycles (when synchronizers are enabled). As a result, in the first two cycles, the block may be exposed to stale data from the synchronizer output. Hence, during the first two clock cycles, the reset is activated and the block is in bypass mode.

Table 6-4. Clock and Reset Register Control

Register[BIT_POS]	Bit Name	Description
PRGIO_PRT0_CTL[12:8]	CLK_SRC[4:0]	Clock (clk_block)/reset (rst_block_n) source selection: "0": io_data[0]/'1' ... "7": io_data[7]/'1' "8": chip_data[0]/'1' ... "15": chip_data[7]/'1' "16": clk_prgio/rst_sys_act_n; asserts reset in any power mode other than Active; that is, Smart I/O is active only in Active power mode with clock from the peripheral divider. "17": clk_prgio/rst_sys_dpslp_n. Smart I/O is active in all power modes with clock from the peripheral divider. However, the clock will not be active in Deep-Sleep power mode. "19": clk_lf/rst_lf_dpslp_n. Smart I/O is active in all power modes with clock from ILO. "20"-"30": Clock source is a constant '0'. Any of these clock sources should be selected when the IP is disabled to ensure low power consumption. "31": clk_sys/'1'. This selection is NOT intended for "clk_sys" operation. However, for asynchronous operation, three "clk_sys" cycles after enabling the IP, the IP is fully functional (reset is de-activated). To be used for asynchronous (clockless) block functionality.

6.5.2.2 Synchronizer

Each GPIO input signal and device input signal (HSIOM input) can be used either asynchronously or synchronously. To use the signals synchronously, a double flip-flop synchronizer, as shown in Figure 6-5, is placed on both these signal paths to synchronize the signal to the Smart I/O clock (clk_block). The synchronization for each pin/input is enabled or disabled by setting or clearing the IO_SYNC_EN[i] bit field for GPIO input signal and CHIP_SYNC_EN[i] for HSIOM signal in the PRGIO_PRT0_SYNC_CTL register, where 'i' is the pin number.

Figure 6-5. Smart I/O Clock Synchronizer

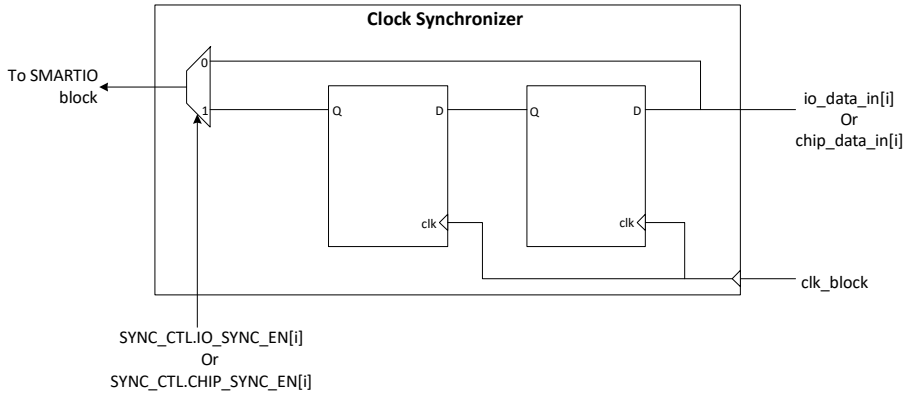

6.5.2.3 LUT3

Each Smart I/O block contains eight lookup table (LUT3) components. The LUT3 component consists of a three-input LUT and a flip-flop. Each LUT3 block takes three input signals and generates an output based on the configuration set in the PRGIO_PRTx_LUT_CTLy register (y denotes the LUT3 number). For each LUT3, the configuration is determined by an 8-bit lookup vector LUT[7:0] and a 2-bit opcode OPC[1:0] in the PRGIO_PRTx_LUT_CTLy register. The 8-bit vector is used as a lookup table for the three input signals. The 2-bit opcode determines the usage of the flip-flop. The LUT3 configuration for different opcode is shown in Figure 6-6.

PRGIO_PRTx_LUT_SELy registers select the three input signals (tr0_in, tr1_in and tr2_in) going into each LUT3. The input can come from the following sources:

- Data unit output
- Other LUT3 output signals (tr_out)
- HSIOM output signals (chip_data[7:0])
- GPIO input signals (io_data[7:0])

LUT_TR0_SEL[3:0] bits of the PRGIO_PRTx_LUT_SELy register selects the tr0_in signal for the yth LUT3. Similarly, LUT_TR1_SEL[3:0] bits and LUT_TR2_SEL[3:0] bits select the tr1_in and tr2_in signals respectively. See Table 6-5 for details.

Table 6-5. LUT3 Register Control

Register[BIT_POS]	Bit Name	Description
PRGIO_PRTx_LUT_CTLy[7:0]	LUT[7:0]	LUT configuration. Depending on the LUT opcode (LUT_OPC), the internal state, and the LUT input signals tr0_in, tr1_in, and tr2_in, the LUT configuration is used to determine the LUT output signal and the next sequential state.
PRGIO_PRTx_LUT_CTLy[9:8]	LUT_OPC[1:0]	LUT opcode specifies the LUT operation as illustrated in Figure 6-6.
PRGIO_PRTx_LUT_SELy[3:0]	LUT_TR0_SEL[3:0]	LUT input signal “tr0_in” source selection: “0”: Data unit output “1”: LUT 1 output “2”: LUT 2 output “3”: LUT 3 output “4”: LUT 4 output “5”: LUT 5 output “6”: LUT 6 output “7”: LUT 7 output “8”: chip_data[0] (for LUTs 0, 1, 2, 3); chip_data[4] (for LUTs 4, 5, 6, 7) “9”: chip_data[1] (for LUTs 0, 1, 2, 3); chip_data[5] (for LUTs 4, 5, 6, 7) “10”: chip_data[2] (for LUTs 0, 1, 2, 3); chip_data[6] (for LUTs 4, 5, 6, 7) “11”: chip_data[3] (for LUTs 0, 1, 2, 3); chip_data[7] (for LUTs 4, 5, 6, 7) “12”: io_data[0] (for LUTs 0, 1, 2, 3); io_data[4] (for LUTs 4, 5, 6, 7) “13”: io_data[1] (for LUTs 0, 1, 2, 3); io_data[5] (for LUTs 4, 5, 6, 7) “14”: io_data[2] (for LUTs 0, 1, 2, 3); io_data[6] (for LUTs 4, 5, 6, 7) “15”: io_data[3] (for LUTs 0, 1, 2, 3); io_data[7] (for LUTs 4, 5, 6, 7)
PRGIO_PRTx_LUT_SELy[11:8]	LUT_TR1_SEL[3:0]	LUT input signal “tr1_in” source selection: “0”: LUT 0 output “1”: LUT 1 output “2”: LUT 2 output “3”: LUT 3 output “4”: LUT 4 output “5”: LUT 5 output “6”: LUT 6 output “7”: LUT 7 output “8”: chip_data[0] (for LUTs 0, 1, 2, 3); chip_data[4] (for LUTs 4, 5, 6, 7) “9”: chip_data[1] (for LUTs 0, 1, 2, 3); chip_data[5] (for LUTs 4, 5, 6, 7) “10”: chip_data[2] (for LUTs 0, 1, 2, 3); chip_data[6] (for LUTs 4, 5, 6, 7) “11”: chip_data[3] (for LUTs 0, 1, 2, 3); chip_data[7] (for LUTs 4, 5, 6, 7) “12”: io_data[0] (for LUTs 0, 1, 2, 3); io_data[4] (for LUTs 4, 5, 6, 7) “13”: io_data[1] (for LUTs 0, 1, 2, 3); io_data[5] (for LUTs 4, 5, 6, 7) “14”: io_data[2] (for LUTs 0, 1, 2, 3); io_data[6] (for LUTs 4, 5, 6, 7) “15”: io_data[3] (for LUTs 0, 1, 2, 3); io_data[7] (for LUTs 4, 5, 6, 7)
PRGIO_PRTx_LUT_SELy[19:16]	LUT_TR2_SEL[3:0]	LUT input signal “tr2_in” source selection. Encoding is the same as for LUT_TR1_SEL.

Figure 6-6. Smart I/O LUT3 Configuration

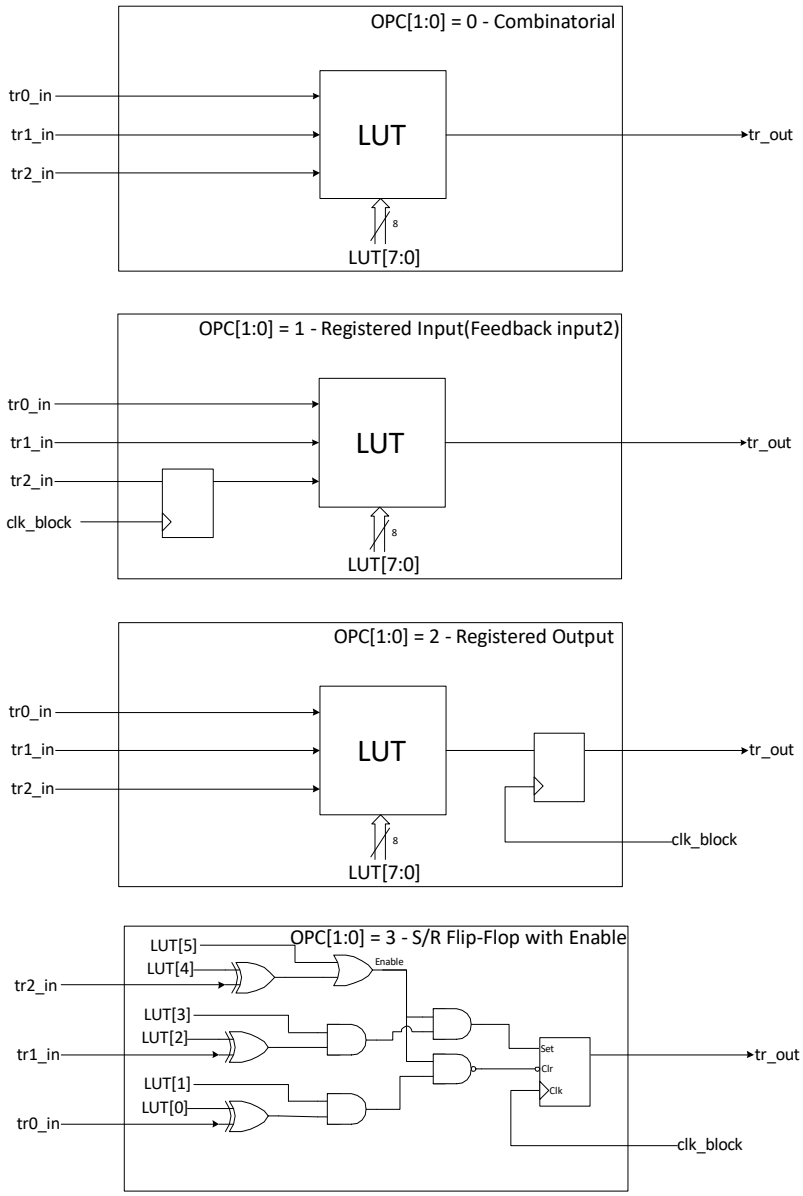

6.5.2.4 Data Unit

Each Smart I/O block includes a data unit (DU) component. The data unit consists of a simple 8-bit datapath. It is capable of performing simple increment, decrement, increment/decrement, shift, and AND/OR operations. The operation performed by the DU is selected using a 4-bit opcode DU_OPC[3:0] bit field in the PRGIO_PRTx_DU_CTL register.

The data unit component supports up to three input trigger signals (tr0_in, tr1_in, tr2_in) similar to the LUT3 component. These signals are used to initiate an operation defined by the DU opcode. In addition, the data unit also includes two 8-bit input data (data0_in[7:0] and data1_in[7:0]) that are used to initialize the 8-bit internal state (data[7:0]) or to provide a reference. The input to these 8-bit data can come from these sources:

- Constant ‘0x00’
- io_data_in[7:0]
- chip_data_in[7:0]
- DATA[7:0] bit field of PRGIO_PRTx_DATA register

The trigger signals are selected using the DU_TRx_SEL[3:0] bit field of the PRGIO_PRTx_DU_SEL register. The DUT_DATAx_SEL[1:0] bits of the PRGIO_PRTx_DU_SEL register selects the 8-bit input data source. The size of the DU (number of bits used by the datapath) is defined by the DU_SIZE[2:0] bits of the PRGIO_PRTx_DU_CTL register. See Table 6-6 for register control details.

Table 6-6. Data Unit Register Control

Register[BIT_POS]	Bit Name	Description
PRGIO_PRTx_DU_CTL[2:0]	DU_SIZE[2:0]	Size/width of the data unit (in bits) is DU_SIZE+1. For example, if DU_SIZE is 7, the width is 8 bits.
PRGIO_PRTx_DU_CTL[11:8]	DU_OPC[3:0]	Data unit opcode specifies the data unit operation: “0”: Count Up “1”: Count Down “2”: Count Up Wrap “3”: Count Down Wrap “4”: Count Up/Down “5”: Count Up/Down Wrap “6”: Rotate Right “7”: Shift Right “8”: DATA0 & DATA1 “9”: Majority 3 “10”: Match DATA1 Otherwise: Undefined.
PRGIO_PRTx_DU_SEL[3:0]	DU_TR0_SEl[3:0]	Data unit input signal “tr0_in” source selection: “0”: Constant '0'. “1”: Constant '1'. “2”: Data unit output. “10-3”: LUT 7 - 0 outputs. Otherwise: Undefined.
PRGIO_PRTx_DU_SEL[11:8]	DU_TR1_SEl[3:0]	Data unit input signal “tr1_in” source selection. Encoding same as DU_TR0_SEL
PRGIO_PRTx_DU_SEL[19:16]	DU_TR2_SEl[3:0]	Data unit input signal “tr2_in” source selection. Encoding same as DU_TR0_SEL
PRGIO_PRTx_DU_SEL[25:24]	DU_DATA0_SEL[1:0]	Data unit input data “data0_in” source selection: “0”: Constant 0 “1”: data[7:0]. “2”: gpio[7:0]. “3”: DU Reg.
PRGIO_PRTx_DU_SEL[29:28]	DU_DATA1_SEL[1:0]	Data unit input data “data1_in” source selection. Encoding same as DU_DATA0_SEL.
PRGIO_PRTx_DATA[7:0]	DATA[7:0]	Data unit input data source.

The data unit generates a single output trigger signal (“tr_out”). The internal state (du_data[7:0]) is captured in flip-flops and requires clk_block.

The following pseudo code describes the various datapath operations supported by the DU opcode. Note that “Comb” describes the combinatorial functionality – that is, functionalities that operate independent of previous output states. “Reg” describes the registered functionality – that is, functionalities that operate on inputs and previous output states (registered using flip-flops).

```
// The following is shared by all operations.
mask = (2 ^ (DU_SIZE+1) - 1)
data_eql_data1_in = (data & mask) == (data1_in & mask));
data_eql_0        = (data & mask) == 0);
data_incr         = (data + 1) & mask;
data_decr         = (data - 1) & mask;
data0_masked      = data_in0 & mask;

// INCR operation: increments data by 1 from an initial value (data0) until it reaches a
// final value (data1).
Comb:tr_out = data_eql_data1_in;
Reg:  data <= data;
      if (tr0_in)      data <= data0_masked; //tr0_in is reload signal - loads masked data0
                                             // into data
      else if (tr1_in) data <= data_eql_data1_in ? data : data_incr; //increment data until
                                                                     // it equals data1

// INCR_WRAP operation: operates similar to INCR but instead of stopping at data1, it wraps
// around to data0.
Comb:tr_out = data_eql_data1_in;
Reg:  data <= data;
      if (tr0_in)      data <= data0_masked;
      else if (tr1_in) data <= data_eql_data1_in ? data0_masked : data_incr;

// DECR operation: decrements data from an initial value (data0) until it reaches 0.
Comb:tr_out = data_eql_0;
Reg:  data <= data;
      if (tr0_in)      data <= data0_masked;
      else if (tr1_in) data <= data_eql_0        ? data : data_decr;

// DECR_WRAP operation: works similar to DECR. Instead of stopping at 0, it wraps around to
// data0.
Comb:tr_out = data_eql_0;
Reg:  data <= data;
      if (tr0_in)      data <= data0_masked;
      else if (tr1_in) data <= data_eql_0        ? data0_masked: data_decr;

// INCR_DECR operation: combination of INCR and DECR. Depending on trigger signals it either
// starts incrementing or decrementing. Increment stops at data1 and decrement stops at 0.
Comb:tr_out = data_eql_data1_in | data_eql_0;
Reg:  data <= data;
      if (tr0_in)      data <= data0_masked; // Increment operation takes precedence over
                                             // decrement when both signal are available
      else if (tr1_in) data <= data_eql_data1_in ? data : data_incr;
      else if (tr2_in) data <= data_eql_0  ? data : data_decr;

// INCR_DECR_WRAP operation: same functionality as INCR_DECR with wrap around to data0 on
// touching the limits.
Comb:tr_out = data_eql_data1_in | data_eql_0;
Reg:  data <= data;
      if (tr0_in)      data <= data0_masked;
```

```
      else if (tr1_in) data <= data_eql_data1_in ? data0_masked : data_incr;
      else if (tr2_in) data <= data_eql_0  ? data0_masked : data_decr;

// ROR operation: rotates data right and LSB is sent out. The data for rotation is taken from
// data0.
Comb:tr_out = data[0];
Reg:  data <= data;
      if (tr0_in)      data          <= data0_masked;
      else if (tr1_in) {
                       data          <= {0, data[7:1]} & mask; //Shift right operation
                       data[du_size] <= data[0]; //Move the data[0] (LSB) to MSB
      }

// SHR operation: performs shift register operation. Initial data (data0) is shifted out and
// data on tr2_in is shifted in.
Comb:tr_out = data[0];
Reg:  data <= data;
      if (tr0_in)      data          <= data0_masked;
      else if (tr1_in) {
                       data          <= {0, data[7:1]} & mask; //Shift right operation
                       data[du_size] <= tr2_in; //tr2_in Shift in operation
      }

// SHR_MAJ3 operation: performs the same functionality as SHR. Instead of sending out the
// shifted out value, it sends out a '1' if in the last three samples/shifted-out values
// (data[0]), the signal high in at least two samples. otherwise, sends a '0'. This function
// sends out the majority of the last three samples.
Comb:tr_out =   (data == 0x03)
              | (data == 0x05)
              | (data == 0x06)
              | (data == 0x07);
Reg:  data <= data;
      if (tr0_in)      data          <= data0_masked;
      else if (tr1_in) {
                       data          <= {0, data[7:1]} & mask;
                       data[du_size] <= tr2_in;
      }

// SHR_EQL operation: performs the same operation as SHR. Instead of shift-out, the output is
// a comparison result (data0 == data1).
Comb:tr_out = data_eql_data1_in;
Reg:  data <= data;
      if      (tr0_in) data          <= data0_masked;
      else if (tr1_in) {
                       data          <= {0, data[7:1]} & mask;
                       data[du_size] <= tr2_in;
      }

// AND_OR operation: ANDs data1 and data0 along with mask; then, ORs all the bits of the
// ANDed output.
Comb:tr_out = | (data & data1_in & mask);
Reg:  data <= data;
      if (tr0_in) data <= data0_masked;
```

6.5.3 Routing

The Smart I/O block includes many switches that are used to route the signals in and out of the block and also between various components present inside the block. The routing switches are handled through the PRTGIO_PRTx_LUT_SELy and PRGIO_PRTx_DU_SEL registers. Refer to the Registers TRM for details. The Smart I/O internal routing is shown in Figure 6-7. In the figure, note that LUT7 to LUT4 operate on io_data/chip_data[7] to io_data/chip_data[4] whereas LUT3 to LUT0 operate on io_data/chip_data[3] to io_data/chip_data[0].

Figure 6-7. Smart I/O Routing

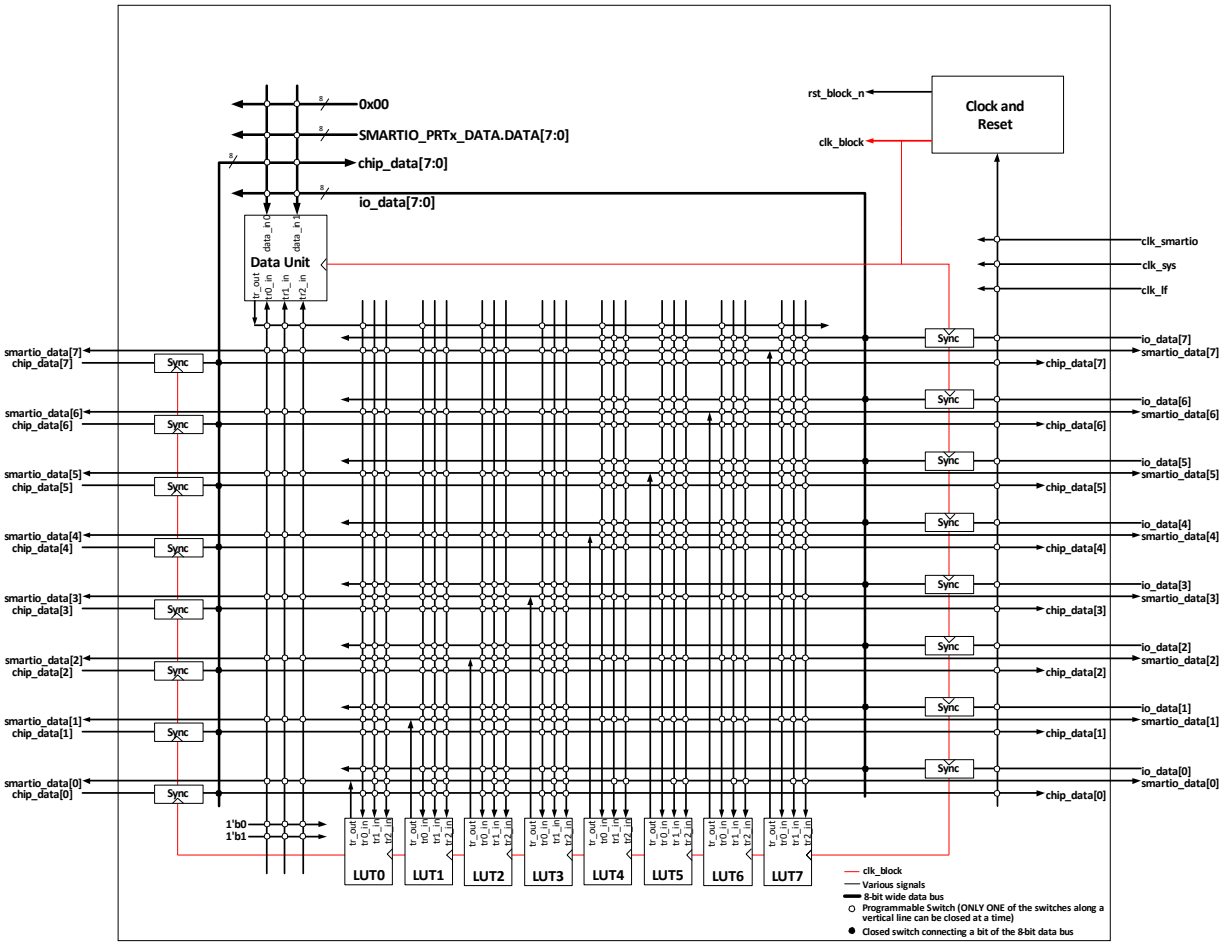

6.5.4 Operation

The Smart I/O block should be configured and operated as follows:

1. Before enabling the block, all the components should be configured and the routing should be selected, as explained in “Block Components” on page 42.
2. In addition to configuring the components and routing, some block level settings need to be configured correctly for desired operation.
   a. Bypass control: The Smart I/O path can be bypassed for a particular GPIO signal by setting the BYPASS[i] bit field in the PRGIO_PRTx_CTL register. When bit 'i' is set in the BYPASS[7:0] bit field, the ith GPIO signal is bypassed to the HSIOM signal path directly – Smart I/O logic will not be present in that signal path. This is useful when the Smart I/O functionality is required only on select I/Os.
   b. Pipelined trigger mode: The LUT3 input multiplexers and the LUT3 component itself do not include any combinatorial loops. Similarly, the data unit also does not include any combinatorial loops. However, when one LUT3 interacts with the other or to the data unit, inadvertent combinatorial loops are possible. To overcome this limitation, the PIPELINE_EN bit field of the PRGIO_PRTx_CTL register is used. When set, all the outputs (LUT3 and data unit) are registered (flopped) before branching out to other components. The output will be unflopped when the PIPELINE_EN bit is cleared.
3. After the Smart I/O block is configured for the desired functionality, the block can be enabled by setting the ENABLED bit field of the PRGIO_PRTx_CTL register. If disabled, the Smart I/O block is put in bypass mode, where the GPIO signals are directly controlled by the HSIOM signals and vice-versa. The Smart I/O block must be configured; that is, all register settings must be updated before enabling the block to prevent glitches during register updates.

Table 6-7. Smart I/O Block Controls

Register [BIT_POS]	Bit Name	Description
PRGIO_PRTx_CTL[25]	PIPELINE_EN	Enable for pipeline register: '0': Disabled (register is bypassed). '1': Enabled
PRGIO_PRTx_CTL[31]	ENABLED	Enable Smart I/O. Should only be set to '1' when the Smart I/O is completely configured: '0': Disabled (signals are bypassed; behavior as if BYPASS[7:0] is 0xFF). When disabled, the block (data unit and LUTs) reset is activated. If the block is disabled: - The PIPELINE_EN register field should be set to '1', to ensure low power consumption. - The CLOCK_SRC register field should be set to 20 to 30 (clock is constant '0'), to ensure low power consumption. '1': Enabled. When enabled, it takes three “clk_block” clock cycles until the block reset is de-activated and the block becomes fully functional. This action ensures that the I/O pins' input synchronizer states are flushed when the block is fully functional.
PRGIO_PRTx_CTL[7:0]	BYPASS[7:0]	Bypass of the Smart I/O, one bit for each I/O pin: BYPASS[i] is for I/O pin i. When ENABLED is '1', this field is used. When ENABLED is '0', this field is not used and Smart I/O is always bypassed. '0': No bypass (Smart I/O is present in the signal path) '1': Bypass (Smart I/O is absent in the signal path)

6.6 I/O State on Power Up

During power up all the GPIOs are in high-impedance analog state and the input buffers are disabled. During run time, GPIOs can be configured by writing to the associated registers. Note that the pins supporting debug access port (DAP) connections (SWD lines) are always enabled as SWD lines during power up. However, the DAP connection can be disabled or reconfigured for general-purpose use through HSIOM. However, this reconfiguration takes place only after the device boots and start executing code.

6.7 Behavior in Low-Power Modes

shows the status of GPIOs in low-power modes.

Table 6-8. GPIO in Low-Power Modes

Low-Power Mode	Status
Sleep	■ GPIOs are active and can be driven by peripherals such as CapSense, CTBm, TCPWM, SCBs, and low-power comparators, which can work in sleep mode. ■ Input buffers are active; thus an interrupt on any I/O can be used to wake up the CPU. ■ AMUXBUS connections are available.
Deep-Sleep	■ GPIO output pin states are latched and remain in the frozen state, except the I^2C and SPI pins. SCB (I^2C and SPI) block can work in the deep-sleep mode and can wake up the CPU on address match or SPI slave select event. The low-power comparator can receive signals from its dedicated pins and can wake up the CPU. CTBm is also functional in this mode with dedicated pins. ■ Input buffers are also active in this mode; pin interrupts are functional. ■ AMUXBUS connections are not available.

6.8 Interrupt

In the PSoC 4 device, all the port pins have the capability to generate interrupts. As shown in Figure 6-2, the pin signal is routed to the interrupt controller through the GPIO Edge Detect block.

Figure 6-8 shows the GPIO Edge Detect block architecture.

Figure 6-8. GPIO Edge Detect Block Architecture

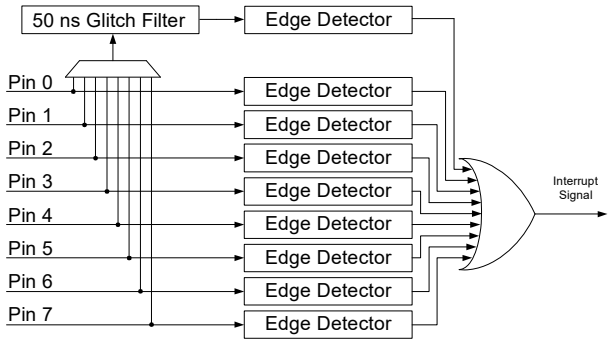

An edge detector is present at each pin. It is capable of detecting rising edge, falling edge, and both edges without reconfiguration. The edge detector is configured by writing into the EDGE_SEL bits of the Port Interrupt Configuration register, GPIO_PRTx_INTR_CFG, as shown in Table 6-9.

Table 6-9. Edge Detector Configuration

EDGE_SEL	Configuration
00	Interrupt is disabled
01	Interrupt on Rising Edge
10	Interrupt on Falling Edge
11	Interrupt on Both Edges

Besides the pins, edge detector is also present at the glitch filter output. This filter can be used on one of the pins of a port. The pin is selected by writing to the FLT_SEL field of the GPIO_PRTx_INTR_CFG register as shown in Table 6-10.

Table 6-10. Glitch filter Input Selection

FLT_SEL	Selected Pin
000	Pin 0 is selected
001	Pin 1 is selected
010	Pin 2 is selected
011	Pin 3 is selected
100	Pin 4 is selected
101	Pin 5 is selected
110	Pin 6 is selected
111	Pin 7 is selected

The edge detector outputs of a port are ORed together and then routed to the interrupt controller (NVIC in the CPU subsystem). Thus, there is only one interrupt vector per port. On a pin interrupt, it is required to know which pin caused an interrupt. This is done by reading the Port Interrupt Status register, GPIO_PRTx_INTR. This register not only includes the information on which pin triggered the interrupt, it also includes the pin status; it allows the CPU to read both information in a single read operation. This register has one more important use – to clear the interrupt. Writing '1' to the corresponding status bit clears the pin interrupt. It is important to clear the interrupt status bit; otherwise, the interrupt will occur repeatedly for a single trigger or respond only once for multiple triggers, which is explained later in this section. Also, note that when the Port Interrupt Control Status register is read when an interrupt is occurring on the corresponding port, it can result in the interrupt not being properly detected. Therefore, when using GPIO interrupts, it is recommended to read the status register only inside the corresponding interrupt service routine and not in any other part of the code. Table 6-11 shows the Port Interrupt Status register bit fields.

Table 6-11. Port Interrupt Status Register

GPIO_PRTx_INTR	Description
0000b to 0111b	Interrupt status on pin 0 to pin 7. Writing '1' to the corresponding bit clears the interrupt
1000b	Interrupt status from the glitch filter
10000b to 10111	Pin 0 to Pin 7 status
11000b	Glitch filter output status

The edge detector block output is routed to the Interrupt Source Multiplexer shown in Figure 5-3, which gives an option of Level and Rising Edge detect. If the Level option is selected, an interrupt is triggered repeatedly as long as the Port Interrupt Status register bit is set. If the Rising Edge detect option is selected, an interrupt is triggered only once if the Port Interrupt Status register is not cleared. Thus, it is important to clear the interrupt status bit if the Edge Detect block is used.

6.9 Peripheral Connections

6.9.1 Firmware Controlled GPIO

See Table 6-3 to know the HSIOM settings for a firmware controlled GPIO. GPIO_PRTx_DR is the data register used to read and write the output data for the GPIOs. A write operation to this register changes the GPIO output to the written value. Note that a read operation reflects the output data written to this register and not the current state of the GPIOs. Using this register, read-modify-write sequences can be safely performed on a port that has both input and output GPIOs.

In addition to the data register, three other registers – GPIO_PRTx_DR_SET, GPIO_PRTx_DR_CLR, and GPIO_PRTx_INV – are provided to set, clear, and invert the output data respectively of a specific pin in a port without affecting other pins. Writing '1' into these registers will set, clear, or invert; writing '0' will have no affect on the pin status.

GPIO_PRTx_PS is the I/O pad register that provides the state of the GPIOs when read. Writes to this register have no effect.

6.9.2 Analog I/O

Analog resources, such as (LPCOMPs), which require low-impedance routing paths have dedicated pins. Dedicated analog pins provide direct connections to specific analog blocks. They help improve performance and should be given priority over other pins when using these analog resources. See the device datasheet for details on these dedicated pins.

To configure a GPIO as a dedicated analog I/O, it should be configured in high-impedance analog mode (see Table 6-2) and the respective connection should be enabled in the specific analog resource. This can be done via registers associated with the respective analog resources.

To configure a GPIO as an analog pin connecting to AMUXBUS, it should be configured in high-impedance analog mode and then routed to AMUXBUS using the HSIOM_PORT_SELx register.

6.9.3 LCD Drive

All GPIOs have the capability of driving an LCD common or segment. HSIOM_PORT_SELx registers are used to select the pins for LCD drive. See the LCD Direct Drive chapter on page 153 for details.

6.9.4 CapSense

The pins that support CSD can be configured as CapSense widgets such as buttons, slider elements, touchpad elements, or proximity sensors. CapSense also requires external tank capacitors and shield lines. Table 6-12 shows the GPIO and HSIOM settings required for CapSense. See the CapSense chapter on page 152 for more information.

Table 6-12. CapSense Settings

CapSense Pin	GPIO Drive Mode (GPIO_PRTx_PC)	Digital Input Buffer Setting (GPIO_PRTx_PC2)	HSIOM Setting
Sensor	High-Impedance Analog	Disable Buffer	CSD_SENSE
Shield	High-Impedance Analog	Disable Buffer	CSD_SHIELD
CMOD (normal operation)	High-Impedance Analog	Disable Buffer	AMUXBUS A or CSD_COMP
CMOD (GPIO precharge, only available in select GPIO)	High-Impedance Analog	Disable Buffer	AMUXBUS B or CSD_COMP
CSH TANK (GPIO precharge, only available in select GPIO)	High-Impedance Analog	Disable Buffer	AMUXBUS B or CSD_COMP

6.9.5 Serial Communication Block (SCB)

SCB, which can be configured as UART, I^2C, and SPI, has dedicated connections to the pin. See the device datasheet or details on these dedicated pins. When the UART and SPI mode is used, the SCB controls the digital output buffer drive mode for the input pin to keep the pin in the high-impedance state. That is, the SCB block disables the output buffer at the UART Rx pin and MISO pin when configured as SPI master, and MOSI and select line when configured as SPI slave. This functionality overrides the drive mode settings, which is done using the GPIO_PRTx_PC register.

6.9.6 Timer, Counter, and Pulse Width Modulator (TCPWM) Block

TCPWM has dedicated connections to the pin. See the device datasheet for details on these dedicated pins. Note that when the TCPWM block inputs such as start and stop are taken from the pins, the drive mode can be only high-z digital because the TCPWM block disables the output buffer at the input pins.

6.10 Registers

Table 6-13. I/O Registers

Name	Description
GPIO_PRTx_DR	Port Output Data Register
GPIO_PRTx_DR_SET	Port Output Data Set Register
GPIO_PRTx_DR_CLR	Port Output Data Clear Register
GPIO_PRTx_DR_INV	Port Output Data Inverting Register
GPIO_PRTx_PS	Port Pin State Register - Reads the logical pin state of I/O
GPIO_PRTx_PC	Port Configuration Register - Configures the output drive mode, input threshold, and slew rate
GPIO_PRTx_PC2	Port Secondary Configuration Register - Configures the input buffer of I/O pin
GPIO_PRTx_INTR_CFG	Port Interrupt Configuration Register
GPIO_PRTx_INTR	Port Interrupt Status Register
HSIOM_PORT_SELx	HSIOM Port Selection Register
PRGIO_PRTx_CTL	Smart I/O port control register
PRGIO_PRTx_SYNC_CTL	Smart I/O Synchronization control register
PRGIO_PRTx_LUT_SELy	Smart I/O y^{th} LUT component input selection register
PRGIO_PRTx_LUT_CTLy	Smart I/O y^{th} LUT component control register
PRGIO_PRTx_DU_SEL	Smart I/O data unit input selection register
PRGIO_PRTx_DU_CTL	Smart I/O data unit control register
PRGIO_PRTx_DATA	Smart I/O data unit input data source register

Note The 'x' in the GPIO register name denotes the port number. For example, GPIO_PTR1_DR is the Port 1 output data register. The ‘x’ in the Smart I/O register name denotes the Smart I/O port number. The Smart I/O port number and the actual port number may vary. See 6.5 Smart I/O on page 42 for details.

7. Clocking System

The PSoC® 4 clock system includes these clock resources:

- Two internal clock sources:
  - 24–48 MHz internal main oscillator (IMO) with ±2 percent accuracy across all frequencies with trim
  - 40-kHz internal low-speed oscillator (ILO) with ±60 percent accuracy with trim (can be calibrated using the IMO)
- Two external clock sources:
  - External clock (EXTCLK) generated using a signal from an I/O pin
  - External 32-kHz watch crystal oscillator (WCO)
- High-frequency clock (HFCLK) of up to 48 MHz, selected from IMO or external clock
- Low-frequency clock (LFCLK) sourced by ILO
- Dedicated prescaler for system clock (SYSCLK) of up to 48 MHz sourced by HFCLK
- Six 16-bit peripheral clock dividers
- Two fractional dividers for accurate clock generation
- Eleven digital and analog peripheral clocks

7.1 Block Diagram

Figure 7-1 gives a generic view of the clocking system in PSoC 4 devices.

Figure 7-1. Clocking System Block Diagram

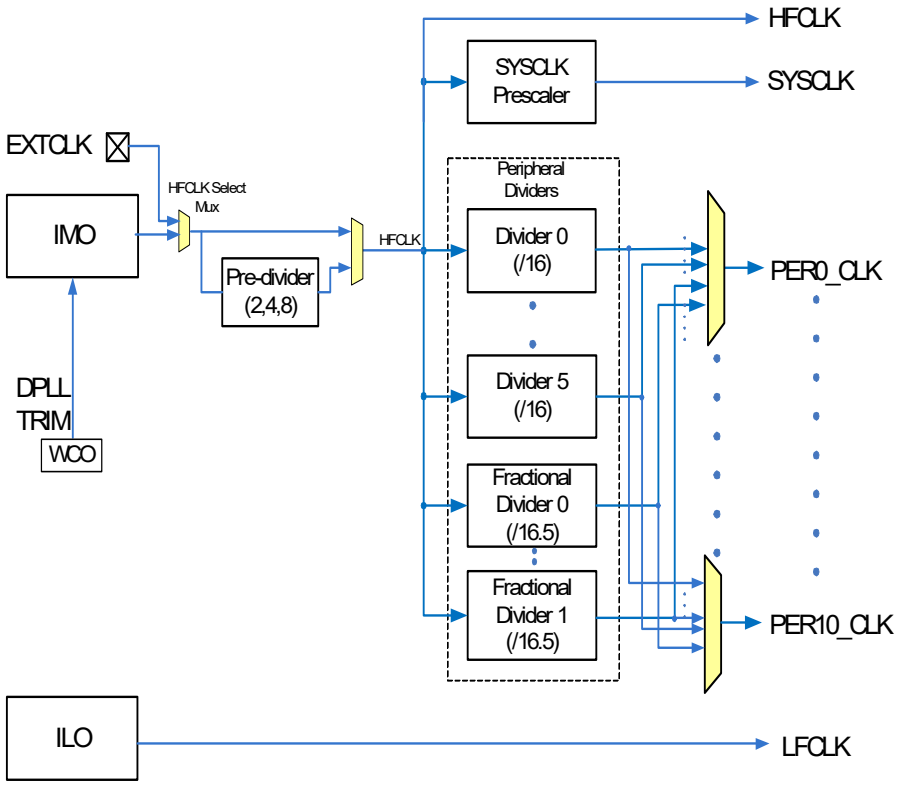

The four clock sources in the device are IMO, EXTCLK, WCO, and ILO, as shown in Figure 7-1. The HFCLK mux selects the HFCLK source from the EXTCLK or the IMO. The HFCLK frequency can be a maximum of 48 MHz.

7.2 Clock Sources

7.2.1 Internal Main Oscillator

The internal main oscillator (IMO) is an accurate, high-speed internal (crystal-less) oscillator that is available as the main clock source during Active and Sleep modes. It is the default clock source for the device. Its frequency can be changed in 4-MHz steps between 24 MHz and 48 MHz, with an accuracy of ±2 percent.

The IMO frequency is changed using the CLK_IMO_SELECT register. The default frequency is 24 MHz.

Table 7-1. IMO Frequency

CLK_IMO_SELECT[2:0]	Nominal IMO Frequency
0	24 MHz
1	28 MHz
2	32 MHz
3	36 MHz
4	40 MHz
5	44 MHz
6	48 MHz

To get the accurate IMO frequency, trim registers are provided – CLK_IMO_TRIM1 provides coarse trimming with a step size of 120 kHz, CLK_IMO_TRIM2 is for fine trimming with a step size of 15 kHz, and the TCTRIM field in CLK_IMO_TRIM3 is for temperature compensation. Trim settings are generated during manufacturing for every frequency that can be selected by CLK_IMO_SELECT. These trim settings are stored in SFLASH.

The trim settings are loaded during device startup; however, firmware can load new trim values and change the frequency in run time. Follow the algorithm in Figure 7-2 to change the IMO frequency.

Figure 7-2. Change IMO Frequency

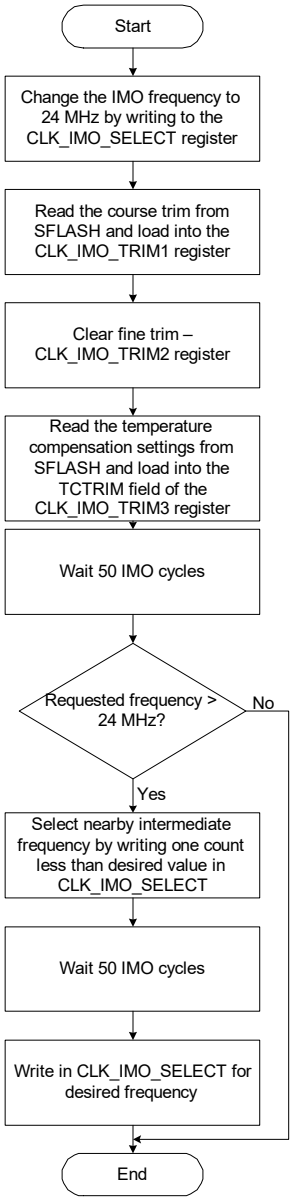

7.2.1.1 Startup Behavior

After reset, the IMO is configured for 24-MHz operation. During the “boot” portion of startup, trim values are read from flash and the IMO is configured to achieve datasheet specified accuracy.

7.2.1.2 Programming Clock (36-MHz)

IMO must be set to 48 MHz to program the flash. It is used to drive the charge pumps of flash and for program/erase timing purposes.

7.2.2 Internal Low-speed Oscillator

The internal low-speed oscillator operates with no external components and outputs a stable clock at 40-kHz nominal. The ILO is relatively low power and low accuracy. It can be calibrated periodically using a higher accuracy, high-frequency clock to improve accuracy. The ILO is available in all power modes except Hibernate and Stop modes. The ILO is used as the system low-frequency clock LFCLK in the device. The ILO is a relatively inaccurate (±60 percent over-voltage and temperature) oscillator, which is used to generate low-frequency clocks. If calibrated against the IMO when in operation, the ILO is accurate to ±10 percent for stable temperature and voltage. The ILO is enabled and disabled with register CLK_ILO_CONFIG bit ENABLE.

7.2.3 External Clock (EXTCLK)

The external clock (EXTCLK) is a MHz range clock that can be generated from a signal on a designated PSoC 4 pin. This clock may be used instead of the IMO as the source of the system high-frequency clock, HFCLK. The allowable range of external clock frequencies is 1–48 MHz. The device always starts up using the IMO and the external clock must be enabled in user mode; so the device cannot be started from a reset, which is clocked by the external clock.

When manually configuring a pin as the input to the EXTCLK, the drive mode of the pin must be set to high-impedance digital to enable the digital input buffer. See the I/O System chapter on page 36 for more details.

7.2.4 Watch Crystal Oscillator (WCO)

The PSoC 4 device contains an oscillator to drive a 32.768-kHz watch crystal. Similar to ILO, WCO is also available in all modes. The WCO is enabled and disabled with the WCO_CONFIG register’s ENABLE bit.

WCO can be forced into low-power mode by setting the WCO_CONFIG[0] bit. Alternatively, the block can be put in the Auto mode where low-power mode transition happens only when the device goes into Deep-Sleep mode. This mode is enabled by setting WCO_CONFIG[1]. Note that the Auto mode will be overridden if the block is forced to low-power mode by setting WCO_CONFIG[0].

The difference in operation between the normal and low-power mode is the amplifier gain. The low-power mode is expected to have a lower amplifier gain to effectively reduce power. The amplifier gain for the two modes can be set in the WCO_TRIM register.

The IMO supports locking to the WCO. The WCO contains the logic to measure and compare the IMO clock and trim the IMO. The WCO implements a digital phased lock loop scheme to support a clock accuracy of ±2 percent. The IMO trimming logic of the WCO can be enabled by the use of the DPLL_ENABLE bit of the WCO_CONFIG. The user firmware, when using this feature, must make sure that there is a minimum time of 500 ms between the WCO enable and the DPLL_ENABLE events.

7.3 Clock Distribution

PSoC 4 clocks are developed and distributed throughout the device, as shown in Figure 7-1. The distribution configuration options are as follows:

- HFCLK input selection
- LFCLK input selection
- SYSCLK prescaler configuration
- Peripheral divider configuration

7.3.1 HFCLK Input Selection

HFCLK in PSoC 4 has two input options: IMO and EXTCLK. The HFCLK input is selected using the CLK_SELECT register's HFCLK_SEL bits, as described in Table 7-2.

Table 7-2. HFCLK Input Selection Bits HFCLK_SEL

Name	Description
HFCLK_SEL[2:0]	HFCLK input clock selection 0: IMO. Uses the IMO as the source of the HFCLK 1: EXTCLK. Uses the EXTCLK as the source of the HFCLK 2–7: Reserved. Do not use

Pre-divider is provided for HFCLK to limit the peak current of the device. The divider options are 2, 4, and 8 configured using HFCLK_DIV bits of the CLK_SELECT register. Default divider is 4.

7.3.2 LFCLK Input Selection

Only the ILO can be the source for LFCLK in the PSoC 4000S device.

7.3.3 SYSCLK Prescaler Configuration

The SYSCLK Prescaler allows the device to divide the HFCLK before use as SYSCLK, which allows for non-integer relationships between peripheral clocks and the system clock. SYSCLK must be equal to or faster than all other clocks in the device that are derived from HFCLK. The SYSCLK prescaler is capable of dividing the HFCLK by powers of 2 between 2^0 = 1 and 2^7 = 128. The prescaler divide value is set using register CLK_SELECT bits SYSCLK_DIV, as described in Table 7-3. The prescaler is initially configured to divide by 1.

Table 7-3. SYSCLK Prescaler Divide Value Bits SYSCLK_DIV

Name	Description
SYSCLK_DIV[3:0]	SYSCLK prescaler divide value 0: SYSCLK = HFCLK 1: SYSCLK = HFCLK/2 2: SYSCLK = HFCLK/4 3: SYSCLK = HFCLK/8 4: SYSCLK = HFCLK/16 5: SYSCLK = HFCLK/32 6: SYSCLK = HFCLK/64 7: SYSCLK = HFCLK/128

7.3.4 Peripheral Clock Divider Configuration

PSoC 4 has eight clock dividers, which include six 16-bit clock dividers and two 16.5-bit fractional clock dividers. Fractional clock dividers allow the clock divisor to include a fraction of 0..31/32. The formula for the output frequency of a fractional divider is Fout = Fin / (INT16_DIV + (FRAC5_DIV/32)). For example, a 16.5-divider with an integer divide value of 2 (INT16_DIV=3, FRAC5_DIV=0), produces signals to generate a 16-MHz clock from a 48-MHz HFCLK. A 16.5-divider with an integer divide value of 3 (INT16_DIV=3, FRAC5_DIV=0), produces signals to generate a 12-MHz clock from a 48-MHz HFCLK. A 16.5-divider with an integer divide value of 2 (INT16_DIV=3) and a fractional divider of 16 (FRAC5_DIV=16) produces signals to generate a 13.7-MHz clock from a 48-MHz HFCLK. Not all 13.7-MHz clock periods are equal in size; half of them will be 3 HFCLK cycles and half of them will be 2 HFCLK cycles.

Fractional dividers are useful when a high-precision clock is required (for example, for a UART/SPI serial interface). Fractional dividers are not used when a low jitter clock is required, because the clock periods have a jitter of 1 HFCLK cycle.

The divide value for each of the 16 integer clock dividers are configured with the PERI_DIV_16_CTLx registers and the four 16.5-bit fractional clock dividers are configured with the PERI_DIV_16_5_CTLx registers. Table 7-4 and Table 7-5 describe the configurations for these registers.

Table 7-4. Non-Fractional Peripheral Clock Divider Configuration Register PERI_DIV_16_CTLx

Bits	Name	Description
0	ENABLE_x	Divider enabled. HW sets this field to '1' as a result of an ENABLE command. HW sets this field to '0' as a result on a DISABLE command.
23:8	INT16_DIV_x	Integer division by (1+INT16_DIV). Allows for integer divisions in the range [1, 65536].

Table 7-5. Fractional Peripheral Clock Divider Configuration Register PERI_DIV_16_5_CTLx

Bits	Name	Description
0	ENABLE_x	Divider enabled. HW sets this field to '1' as a result of an ENABLE command. HW sets this field to '0' as a result on a DISABLE command.
7:3	FRAC5_DIV_x	Fractional division by (FRAC5_DIV/32). Allows for fractional divisions in the range [0, 31/32]. Note that fractional division results in clock jitter as some clock periods may be 1 "clk_hf" cycle longer than other clock periods.
23:8	INT16_DIV_x	Integer division by (1+INT16_DIV). Allows for integer divisions in the range [1, 65,536].

Each divider can be enabled using the PERI_DIV_CMD register. This register acts as the command register for all 16 integer dividers and four fractional dividers. The PERI_DIV_CMD register format is as follows.

Bit	31	30	29	28	27	26	25	24	23	22	21	20	19	18	17	16	15	14	13	12	11	10	9	8	7	6	5	4	3	2	1	0
Description	Enable	Disable															PA_SEL_TYPE		PA_SEL_DIV						SEL_TYPE		SEL_DIV					

The SEL_TYPE field specifies the type of divider being configured. This field is '1' for the 16-bit integer divider and '2' for the 16.5-bit fractional divider.

The SEL_DIV field specifies the number of the specific divider being configured. For the integer dividers, this number ranges from 0 to 15. For fractional dividers, this field is any value in the range 0 to 3. When SEL_TYPE = 63 and SEL_TYPE = 3, no divider is specified.

The (PA_SEL_TYPE, PA_SEL_DIV) field pair allows a divider to be phase-aligned with another divider. The PA_SEL_DIV specifies the divider which is phase aligned. Any enabled divider can be used as a reference. The PA_SEL_TYPE specifies the type of the divider being phase aligned. When PA_SEL_DIV = 63 and PA_SEL_TYPE = 3, HFCLK is used as a reference.

Consider a 48-MHz HFCLK and a need for a 12-MHz divided clock A and a 8-MHz divided clock B. Clock A uses a 16-bit integer divider 0 and is created by aligning it to HF_CLK ((PA_SEL_TYPE, PA_SEL_DIV) is (3, 63)) and DIV_16_CTL0.INT16_DIV is 3. Clock B uses the integer divider 1 and is created by aligning it to clock A ((PA_SEL_TYPE, PA_SEL_DIV) is (1, 0)) and DIV_16_CTL1.INT16_DIV is 5. This guarantees that clock B is phase-aligned with clock A as the smallest common multiple of the two clock periods is 12 HFCLK cycles, the clocks A and B will be aligned every 12 HFCLK cycles. Note that clock B is phase-aligned to clock A, but still uses HFCLK as a reference clock for its divider value.

Each peripheral block in PSoC 4 device has a unique peripheral clock (PERI#_CLK) associated with it. Each of the peripheral clocks have a multiplexed input, which can take the input clock from any of the existing clock dividers.

Table 7-6 and shows the mapping of the mux output to the corresponding peripheral blocks (shown in Figure 7-1). Any of the peripheral clock dividers can be mapped to a specific peripheral by using their respective PERI_PCLK_CTLx register, as described in Table 7-7.

Table 7-6. Peripheral Clock Multiplexer Output Mapping

PERI#_CLK	Peripheral
0	SCB0
1	SCB1
2	CSD
3	TCPWM0
4	TCPWM1
5	TCPWM2
6	TCPWM3
7	TCPWM4
8	Smart I/O
9	Smart I/O
10	LCD

Table 7-7. Programmable Clock Control Register - PERI_PCLK_CTLx

Bits	Name	Description
5:0	SEL_DIV	Specifies one of the dividers of the divider type specified by SEL_TYPE. If SEL_DIV is "4" and SEL_TYPE is "1", then the fifth (zero being first) 16-bit clock divider will be routed to the mux output for peripheral clock_x. Similarly, if SEL_DIV is "0" and SEL_TYPE is "2", then the first 16.5 clock divider will be routed to the mux output.
7:6	SEL_TYPE	0: Do not use 1: 16.0 (integer) clock dividers 2: 16.5 (fractional) clock dividers 3:

7.4 Low-Power Mode Operation

The high-frequency clocks including the IMO, EXTCLK, HFCLK, SYSCLK, and peripheral clocks operate only in Active and Sleep modes. The ILO, WCO, and LFCLK operate in all power modes.

7.5 Register List

Table 7-8. Clocking System Register List

Register Name	Description
CLK_IMO_TRIM1	IMO Trim Register - This register contains IMO trim for course correction.
CLK_IMO_TRIM2	IMO Trim Register - This register contains IMO trim for fine correction.
CLK_IMO_TRIM3	IMO Trim Register - This register contains the temperature compensation trim settings for IMO and trim settings to adjust the step size of the course and fine correction of IMO frequency.
PWR_BG_TRIM1	Bandgap Trim Registers - These registers control the trim of the bandgap reference, allowing manipulation of the voltage references in the device.
PWR_BG_TRIM2	
CLK_ILO_CONFIG	ILO Configuration Register - This register controls the ILO configuration.
CLK_IMO_CONFIG	IMO Configuration Register - This register controls the IMO configuration.
CLK_SELECT	Clock Select - This register controls clock tree configuration, selecting different sources for the system clocks.
WCO_CONFIG	WCO Enable. This register enables or disables the external watch crystal oscillator.
PERI_DIV_16_CTLx	Peripheral Clock Divider Control Registers - These registers configure the peripheral clock dividers, setting integer divide value, and enabling or disabling the divider.
PERI_DIV_16_5_CTLx	Peripheral Clock Fractional Divider Control Registers - These registers configure the peripheral clock dividers, setting fractional divide value, and enabling or disabling the divider.
PERI_PCLK_CTLx	Programmable Clock Control Registers - These registers are used to select the input clocks to peripherals.

8. Power Supply and Monitoring

PSoC® 4 is capable of operating from a 1.71 V to 5.5 V externally supplied voltage. This is supported through one of the two following operating ranges:

- 1.80 V to 5.50 V supply input to the internal regulators
- 1.71 V to 1.89 V[1] direct supply

There are two internal regulators to support the various power modes - Active digital regulator and Deep-Sleep regulator.

8.1 Block Diagram

Figure 8-1. Power System Block Diagram

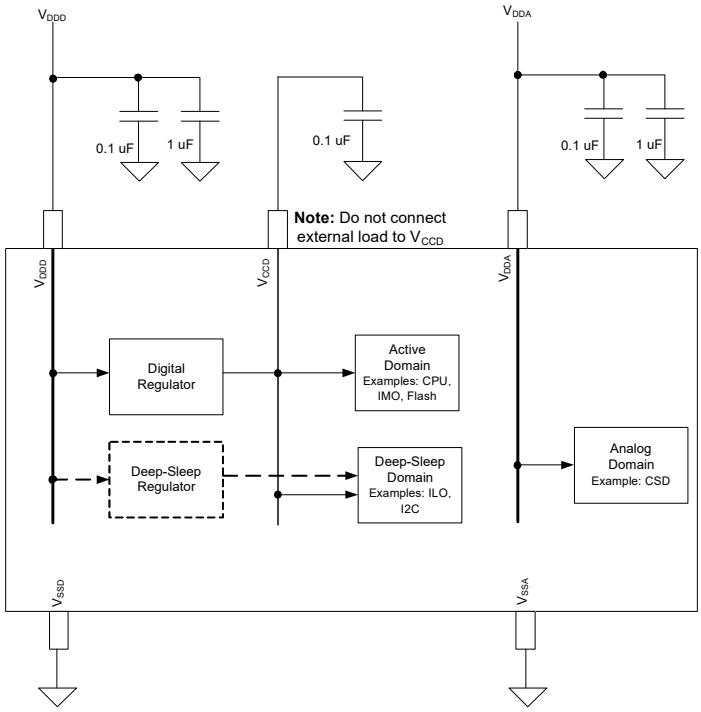

Figure 8-1 shows the power system diagram and all the power supply pins. The system has one regulator in Active mode for the digital circuitry. There is no analog regulator; the analog circuits run directly from the V_{DDA} input. There is a separate regulator for Deep-Sleep mode.

The supply voltage range is 1.71 V to 5.5 V with all functions and circuits operating in that range. The device allows two distinct modes of power supply operation: unregulated external supply and regulated external supply modes.

1. When the system supply is in the range 1.80 V to 1.89 V, both direct supply and internal regulator options can be used. The selection can be made depending on the user's system capability. Note that the supply voltage cannot go above 1.89 V for the direct supply option because it will damage the device. It should not go below 1.80 V for the internal regulator option because the regulator will turn off.

8.2 Power Supply Scenarios

The following diagrams illustrate the different ways in which the device is powered.

8.2.1 Single 1.8 V to 5.5 V Unregulated Supply

If a 1.8-V to 5.5-V supply is to be used as the unregulated power supply input, it should be connected as shown in Figure 8-2.

Figure 8-2. Single Regulated V_{DDD} Supply

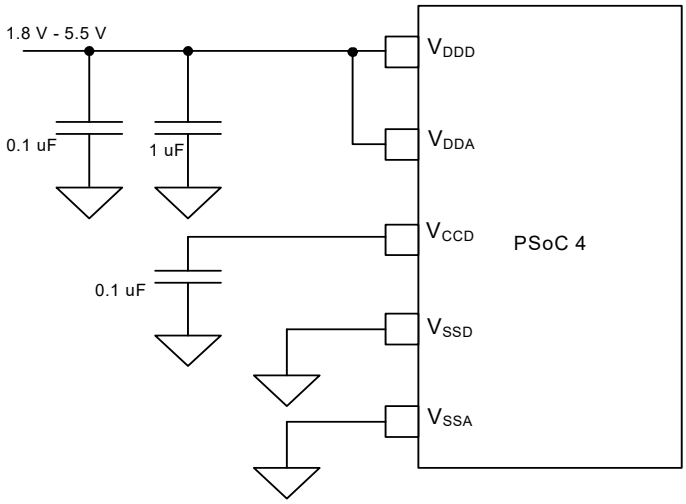

In this mode, the device is powered by an external power supply that can be anywhere in the range of 1.8 V to 5.5 V. This range is also designed for battery-powered operation; for instance, the chip can be powered from a battery system that starts at 3.5 V and works down to 1.8 V. In this mode, the internal regulator supplies the internal logic. The V_{CCD} output must be bypassed to ground via a 0.1 µF external ceramic capacitor.

Bypass capacitors are also required from V_{DDD} to ground; typical practice for systems in this frequency range is to use a bulk capacitor in the 1 µF to 10 µF range in parallel with a smaller ceramic capacitor (0.1 µF, for example). Note that these are simply rules of thumb and that, for critical applications, the PCB layout, lead inductance, and the bypass capacitor parasitic should be simulated to design and obtain optimal bypassing.

8.2.2 Direct 1.71 V to 1.89 V Regulated Supply

In direct supply configuration, V_{CCD} and V_{DDD} are shorted together and connected to a 1.71-V to 1.89-V supply. This regulated supply should be connected to the device, as shown in Figure 8-3.

Figure 8-3. Single Unregulated V_{DDD} Supply

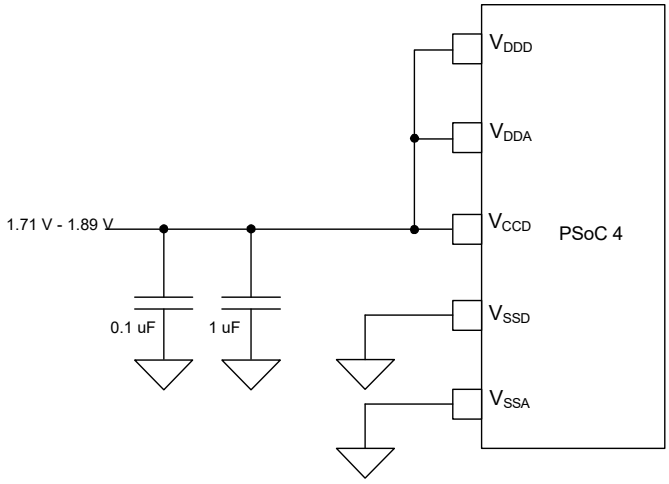

In this mode, V_{CCD} and V_{DDD} pins are shorted together and bypassed. The internal regulator should be disabled in firmware. See 8.3.1.1 Active Digital Regulator on page 65 for details.

8.3 How It Works

The regulators in Figure 8-1 power the various domains of the device. All the core regulators draw their input power from the V_{DDD} pin supply. The analog circuits run directly from the V_{DDA} input.

8.3.1 Regulator Summary

8.3.1.1 Active Digital Regulator

Table 8-1. Regulator Status in Different Power Modes

Mode	Active Digital Regulator	Deep-Sleep Regulator
Deep-Sleep	Off	On
Sleep	On	On
Active	On	On

For external supplies from 1.8 V and 5.5 V, the Active digital regulator provides the main digital logic in Active and Sleep modes. This regulator has its output connected to a pin (V_{CCD}) and requires an external decoupling capacitor (1 µF X5R).

For supplies below 1.8 V, V_{CCD} must be supplied directly. In this case, V_{CCD} and V_{DDD} must be shorted together, as shown in Figure 8-3.

The Active digital regulator can be disabled by setting the EXT_VCCD bit in the PWR_CONTROL register. This action reduces the power consumption in direct supply mode. The Active digital regulator is available only in Active and Sleep power modes.

8.3.1.2 Deep-Sleep Regulator

This regulator supplies the circuits that remain powered in Deep-Sleep mode, such as the ILO, WCO, and SCB (I^2C/SPI), and low-power comparator. The Deep-Sleep regulator is available in all power modes. In Active and Sleep power modes, the main output of this regulator is connected to the output of the Active digital regulator (V_{CCD}).

8.4 Voltage Monitoring

The voltage monitoring system includes power-on-reset (POR) brownout detection (BOD).

8.4.1 Power-On-Reset (POR)

POR circuits provide a reset pulse during the initial power ramp. POR circuits monitor V_{CCD} voltage. Typically, the POR circuits are not very accurate with respect to trip-point. POR circuits are used during initial chip power-up and then disabled.

8.4.1.1 Brownout-Detect (BOD)

The BOD circuit protects the operating or retaining logic from possibly unsafe supply conditions by applying reset to the device. BOD circuit monitors the V_{CCD} voltage. The BOD circuit generates a reset if a voltage excursion dips below the minimum V_{CCD} voltage required for safe operation (see the device datasheet for details). The system will not come out of RESET until the supply is detected to be valid again.

To ensure reliable operation of the device, the watchdog timer should be used in all designs. Watchdog timer provides protection against abnormal brownout conditions that may compromise the CPU functionality. See Watchdog Timer chapter on page 71 for more details.

8.5 Register List

Table 8-2. Power Supply and Monitoring Register List

Register Name	Description
PWR_CONTROL	Power Mode Control Register – This register allows configuration of device power modes and regulator activity.

9. Chip Operational Modes

PSoC® 4 is capable of executing firmware in four different modes. These modes dictate execution from different locations in flash and ROM, with different levels of hardware privileges. Only three of these modes are used in end-applications; debug mode is used exclusively to debug designs during firmware development.

PSoC 4 operational modes are:

- Boot
- User
- Privileged
- Debug

9.1 Boot

Boot mode is an operational mode where the device is configured by instructions hard-coded in the device SROM. This mode is entered after the end of a reset, provided no debug-acquire sequence is received by the device. Boot mode is a privileged mode; interrupts are disabled in this mode so that the boot firmware can set up the device for operation without being interrupted. During boot mode, hardware trim settings are loaded from flash to guarantee proper operation during power-up. When boot concludes, the device enters user mode and code execution from flash begins. This code in flash may include automatically generated instructions from the PSoC Creator IDE that will further configure the device.

9.2 User

User mode is an operational mode where normal user firmware from flash is executed. User mode cannot execute code from SROM. Firmware execution in this mode includes the automatically generated firmware by the PSoC Creator IDE and the firmware written by the user. The automatically generated firmware can govern both the firmware startup and portions of normal operation. The boot process transfers control to this mode after it has completed its tasks.

9.3 Privileged

Privileged mode is an operational mode, which allows execution of special subroutines that are stored in the device ROM. These subroutines cannot be modified by the user and are used to execute proprietary code that is not meant to be interrupted or observed. Debugging is not allowed in privileged mode.

The CPU can transition to privileged mode through the execution of a system call. For more information on how to perform a system call, see “Performing a System Call” on page 174. Exit from this mode returns the device to user mode.

9.4 Debug

Debug mode is an operational mode that allows observation of the PSoC 4 operational parameters. This mode is used to debug the firmware during development. The debug mode is entered when an SWD debugger connects to the device during the acquire time window, which occurs during the device reset. Debug mode allows IDEs such as PSoC Creator and Arm MDK to debug the firmware. Debug mode is only available on devices in open mode (one of the four protection modes). For more details on the debug interface, see the Program and Debug Interface chapter on page 166.

For more details on protection modes, see the Device Security chapter on page 76.

10. Power Modes

The PSoC® 4 provides three power modes, intended to minimize the average power consumption for a given application. The power modes, in the order of decreasing power consumption, are:

- Active
- Sleep
- Deep-Sleep

Active, Sleep, and Deep-Sleep are standard Arm-defined power modes, supported by the Arm CPUs.

The power consumption in different power modes is controlled by using the following methods:

- Enabling/disabling peripherals
- Powering on/off internal regulators
- Powering on/off clock sources
- Powering on/off other portions of the PSoC 4

Figure 10-1 illustrates the various power modes and the possible transitions between them.

Figure 10-1. Power Mode Transitions State Diagram

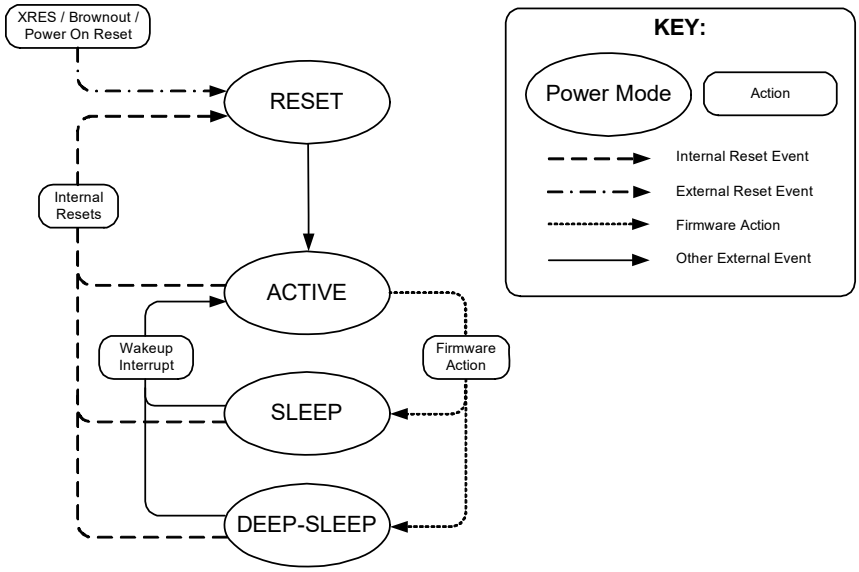

Note: Arm nomenclature for Deep-Sleep power mode is 'SLEEPDEEP'.

Table 10-1 illustrates the power modes offered by PSoC 4.

Table 10-1. PSoC 4 Power Modes

Power Mode	Description	Entry Condition	Wakeup Sources	Active Clocks	Wakeup Action	Available Regulators
Active	Primary mode of operation; all peripherals are available (programmable).	Wakeup from other power modes, internal and external resets, brownout, power on reset	Not applicable	All (programmable)	N/A	All regulators are available. The Active digital regulator can be disabled if external regulation is used.
Sleep	CPU enters Sleep mode and SRAM is in retention; all peripherals are available (programmable).	Manual register write	Any enabled interrupt	All (programmable) except CPU clock	Interrupt	All regulators are available. The Active digital regulator can be disabled if external regulation is used.
Deep-Sleep	All internal supplies are driven from the Deep-Sleep regulator. IMO and high-speed peripherals are off. Only the low-frequency clock is available. Interrupts from low-speed, asynchronous, or low-power analog peripherals can cause a wakeup.	Manual register write	GPIO interrupt, low-power comparator, SCB, watchdog timer	ILO (40 kHz), WCO (32 kHz)	Interrupt	Deep-Sleep regulator

In addition to the wakeup sources mentioned in Table 10-1, external reset (XRES) and brownout reset bring the device to Active mode from any power mode.

10.1 Active Mode

Active mode is the primary power mode of the PSoC device. This mode provides the option to use every possible subsystem/peripheral in the device. In this mode, the CPU is running and all the peripherals are powered. The firmware may be configured to disable specific peripherals that are not in use, to reduce power consumption.

10.2 Sleep Mode

This is a CPU-centric power mode. In this mode, the Cortex-M0+ CPU enters Sleep mode and its clock is disabled. It is a mode that the device should come to very often or as soon as the CPU is idle, to accomplish low power consumption. It is identical to Active mode from a peripheral point of view. Any enabled interrupt can cause wakeup from Sleep mode.

10.3 Deep-Sleep Mode

In Deep-Sleep mode, the CPU, SRAM, and high-speed logic are in retention. The high-frequency clocks, including HFCLK and SYSCLK, are disabled. Optionally, the internal low-frequency (40 kHz) oscillator remains on and low-frequency peripherals continue to operate. Digital peripherals that do not need a clock or receive a clock from their external interface (for example, I^2C slave) continue to operate. Interrupts from low-speed, asynchronous or low-power analog peripherals can cause a wakeup from Deep-Sleep mode.

The available wakeup sources are listed in Table 10-3.

10.4 Power Mode Summary

Table 10-3 illustrates the peripherals available in each low-power mode; Table 10-3 illustrates the wakeup sources available in each power mode.

Table 10-2. Available Peripherals

Peripheral	Active	Sleep	Deep-Sleep
CPU	Available	Retention[a]	Retention
SRAM	Available	Retention	Retention
High-speed peripherals	Available	Available	Retention
Low-speed peripherals	Available	Available	Available (optional)
Internal main oscillator (IMO)	Available	Available	Not Available
Internal low-speed oscillator (ILO, 40 kHz)	Available	Available	Available (optional)
Asynchronous peripherals (peripherals that do not run on internal clock)	Available	Available	Available
Power-on-reset, Brownout detection	Available	Available	Available
Analog mux bus connection	Available	Available	Available
Low-power comparator	Available	Available	Available
GPIO output state	Available	Available	Available

a. The configuration and state of the peripheral is retained. Peripheral continues its operation when the device enters Active mode.

Table 10-3. Wakeup Sources

Power Mode	Wakeup Source	Wakeup Action
Sleep	Any enabled interrupt source	Interrupt
Deep-Sleep	GPIO interrupt	Interrupt
	I2C address match	Interrupt
	Watchdog timer	Interrupt/Reset
	Low-power comparator	Interrupt

Note: In addition to the wakeup sources mentioned in Table 10-3, external reset (XRES) and brownout reset bring the device to Active mode from any power mode. XRES and brownout trigger a full system restart. All the states including frozen GPIOs are lost. In this case, the cause of wakeup is not readable after the device restarts.

10.5 Low-Power Mode Entry and Exit

A Wait For Interrupt (WFI) instruction from the Cortex-M0+ (CM0+) triggers the transitions into Sleep and Deep-Sleep mode. The Cortex-M0+ can delay the transition into a low-power mode until the lowest priority ISR is exited (if the SLEEPONEXIT bit in the CM0 System Control Register is set).

The transition to Sleep and Deep-Sleep modes are controlled by the flags SLEEPDEEP in the CM0P System Control Register (CM0P_SCR).

- Sleep is entered when the WFI instruction is executed, SLEEPDEEP = 0.
- Deep-Sleep is entered when the WFI instruction is executed, SLEEPDEEP = 1.

The LPM READY bit in the PWR_CONTROL register shows the status of Deep-Sleep regulator. If the firmware tries to enter Deep-Sleep mode before the regulators are ready, then PSoC 4 goes to Sleep mode first, and when the regulators are ready, the device enters Deep-Sleep mode. This operation is automatically done in hardware.

In Sleep and Deep-Sleep modes, a selection of peripherals are available (see Table 10-3), and firmware can either enable or disable their associated interrupts. Enabled interrupts can cause wakeup from low-power mode to Active mode. Additionally, any RESET returns the system to Active mode. See the Interrupts chapter on page 27 and the Reset System chapter on page 74 for details.

10.6 Register List

Table 10-4. Power Mode Register List

Register Name	Description
CM0P_SCR	System Control - Sets or returns system control data.
PWR_CONTROL	Power Mode Control - Controls the device power mode options and allows observation of current state.

11. Watchdog Timer

The watchdog timer (WDT) is used to automatically reset the device in the event of an unexpected firmware execution path or a brownout that compromises the CPU functionality. The WDT runs from the LFCLK, generated by the ILO. The timer must be serviced periodically in firmware to avoid a reset. Otherwise, the timer will elapse and generate a device reset. The WDT can be used as an interrupt source or a wakeup source in low-power modes.

11.1 Features

The WDT has these features:

- System reset generation after a configurable interval
- Periodic interrupt/wake up generation in Active, Sleep, and Deep-Sleep power modes
- Features a 16-bit free-running counter

11.2 Block Diagram

Figure 11-1. Watchdog Timer Block Diagram

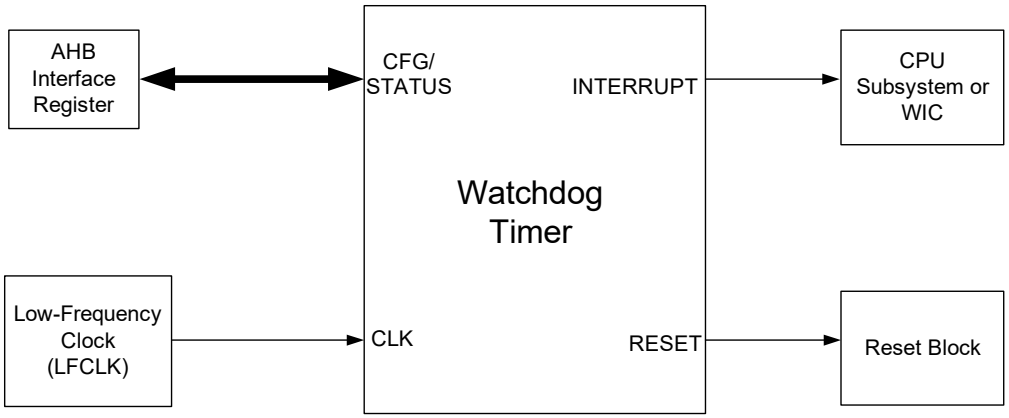

11.3 How It Works

The WDT asserts a hardware reset to the device on the third WDT match event, unless it is periodically serviced in firmware. The WDT is a free-running wraparound up-counter with a maximum of 16-bit resolution. The resolution is configurable as explained later in this section.

The WDT_COUNTER register provides the count value of the WDT. The WDT generates an interrupt when the count value in WDT_COUNTER equals the match value stored in the WDT_MATCH register, but it does not reset the count to '0'. Instead, the WDT keeps counting until it overflows (after 0xFFFF when the resolution is set to 16 bits) and rolls back to 0. When the count value again reaches the match value, another interrupt is generated. Note that the match count can be changed when the counter is running.

A bit named WDT_MATCH in the SRSS_INTR register is set whenever the WDT interrupt occurs. This interrupt must be cleared by writing a '1' to the WDT_MATCH bit in SRSS_INTR to reset the watchdog. If the firmware does not reset the WDT for two consecutive interrupts, the third match event will generate a hardware reset.

The IGNORE_BITS in the WDT_MATCH register can be used to reduce the entire WDT counter period. The ignore bits can specify the number of MSBs that need to be discarded. For example, if the IGNORE_BITS value is 3, then the WDT counter becomes a 13-bit counter. For details, see the WDT_COUNTER, WDT_MATCH, and SRSS_INTR registers in the PSoC 4000S Family: PSoC 4 Registers TRM.

When the WDT is used to protect against system crashes, clearing the WDT interrupt bit to reset the watchdog must be done from a portion of the code that is not directly associated with the WDT interrupt. Otherwise, even if the main function of the firmware crashes or is in an endless loop, the WDT interrupt vector can still be intact and feed the WDT periodically.

The safest way to use the WDT against system crashes is to:

- Configure the watchdog reset period such that firmware is able to reset the watchdog at least once during the period, even along the longest firmware delay path.
- Reset the watchdog by clearing the interrupt bit regularly in the main body of the firmware code by writing a '1' to the WDT_MATCH bit in SRSS_INTR register.
- It is not recommended to reset watchdog in the WDT interrupt service routine (ISR), if WDT is being used as a reset source to protect the system against crashes. Hence, it is not recommended to use WDT reset feature and ISR together.

Follow these steps to use WDT as a periodic interrupt generator:

1. Write the desired IGNORE_BITS in the WDT_MATCH register to set the counter resolution.
2. Write the desired match value to the WDT_MATCH register.
3. Clear the WDT_MATCH bit in SRSS_INTR to clear any pending WDT interrupt.
4. Enable the WDT interrupt by setting the WDT_MATCH bit in SRSS_INTR_MASK
5. Enable global WDT interrupt in the CM0_ISER register (See the Interrupts chapter on page 27 for details).
6. In the ISR, clear the WDT interrupt and add the desired match value to the existing match value. By doing so, another periodic interrupt will be generated when the counter reaches the new match value.

For more details on interrupts, see the Interrupts chapter on page 27.

11.3.1 Enabling and Disabling WDT

The watchdog counter is a free-running counter that cannot be disabled. However, it is possible to disable the watchdog reset by writing a key '0xACED8865' to the WDT_DISABLE_KEY register. Writing any other value to this register will enable the watchdog reset. If the watchdog system reset is disabled, the firmware does not have to periodically reset the watchdog to avoid a system reset. The watchdog counter can still be used as an interrupt source or wakeup source. The only way to stop the counter is to disable the ILO by clearing the ENABLE bit in the CLK_ILO_CONFIG register. The watchdog reset must be disabled before disabling the ILO. Otherwise, any register write to disable the ILO will be ignored. Enabling the watchdog reset will automatically enable the ILO.

Note Disabling the WDT reset is not recommended if:

- Protection is required against firmware crashes
- The power supply can produce sudden brownout events that may compromise the CPU functionality

11.3.2 WDT Interrupts and Low-Power Modes

The watchdog counter can send interrupt requests to the CPU in Active power mode and to the WakeUp Interrupt Controller (WIC) in Sleep and Deep-Sleep power modes. It works as follows:

- **Active Mode:** In Active power mode, the WDT can send the interrupt to the CPU. The CPU acknowledges the interrupt request and executes the ISR. The interrupt must be cleared after entering the ISR in firmware.
- **Sleep or Deep-Sleep Mode:** In this mode, the CPU subsystem is powered down. Therefore, the interrupt request from the WDT is directly sent to the WIC, which will then wake up the CPU. The CPU acknowledges the interrupt request and executes the ISR. The interrupt must be cleared after entering the ISR in firmware.

For more details on device power modes, see the Power Modes chapter on page 67.

11.3.3 WDT Reset Mode

The RESET_WDT bit in the RES_CAUSE register indicates the reset generated by the WDT. This bit remains set until cleared or until a power-on reset (POR), brownout reset (BOD), or external reset (XRES) occurs. All other resets leave this bit untouched. For more details, see the Reset System chapter on page 74.

11.4 Register List

Table 11-1. WDT Registers

Register Name	Description
WDT_DISABLE_KEY	Disables the WDT when 0XACED8865 is written, for any other value WDT works normally
WDT_COUNTER	Provides the count value of the WDT
WDT_MATCH	Stores the match value of the WDT
SRSS_INTR	Services the WDT to avoid reset

Table 11-2. WDT Registers

Register Name	Description
WDT_DISABLE_KEY	Disables the WDT when 0XACED8865 is written; for any other value WDT works normally.
WDT_COUNTER	Provides the count value of the WDT.
WDT_MATCH	Holds the match value of the WDT.
SRSS_INTR	Services the WDT to avoid reset.
WCO_WDT_CTRLOW	Stores the current WDT0 and WDT1 timer value.
WCO_WDT_CTRHIGH	Stores the current WDT2 timer value.
WCO_WDT_MATCH	Holds the match count for WDT0 and WDT1.
WCO_WDT_CONFIG	Configures WDT0, WDT1, and WDT2 – selection of clock source, selection of free running or clear on match, interrupt generation, and cascading.
WCO_WDT_CONTROL	Used for enabling and resetting the timer.
WCO_WDT_CLKEN	Enables the clock (ILO/WCO) to be used with the timer.

12. Reset System

PSoC® 4 supports several types of resets that guarantee error-free operation during power up and allow the device to reset based on user-supplied external hardware or internal software reset signals. PSoC 4 also contains hardware to enable the detection of certain resets.

The reset system has these sources:

- Power-on reset (POR) to hold the device in reset while the power supply ramps up
- Brownout reset (BOD) to reset the device if the power supply falls below specifications during operation
- Watchdog reset (WRES) to reset the device if firmware execution fails to service the watchdog timer
- Software initiated reset (SRES) to reset the device on demand using firmware
- External reset (XRES) to reset the device using an external electrical signal
- Protection fault reset (PROT_FAULT) to reset the device if unauthorized operating conditions occur

12.1 Reset Sources

The following sections provide a description of the reset sources available in PSoC 4.

12.1.1 Power-on Reset

Power-on reset is provided for system reset at power-up. POR holds the device in reset until the supply voltage, V_{DDD}, is according to the datasheet specification. The POR activates automatically at power-up.

POR events do not set a reset cause status bit, but can be partially inferred by the absence of any other reset source. If no other reset event is detected, then the reset is caused by POR, BOD, or XRES.

12.1.2 Brownout Reset

Brownout reset monitors the chip digital voltage supply V_{CCD} and generates a reset if V_{CCD} is below the minimum logic operating voltage specified in the device datasheet. BOD is available in all power modes.

12.1.3 Watchdog Reset

Watchdog reset (WRES) detects errant code by causing a reset if the watchdog timer is not cleared within the user-specified time limit. This feature is enabled by default. It can be disabled by writing '0xACED8865' to the WDT_DISABLE_KEY register.

The RESET_WDT status bit of the RES_CAUSE register is set when a watchdog reset occurs. This bit remains set until cleared or until a POR, XRES, or BOD reset; for example, in the case of a device power cycle. All other resets leave this bit untouched. For more details, see the Watchdog Timer chapter on page 71.

12.1.4 Software Initiated Reset

Software initiated reset (SRES) is a mechanism that allows a software-driven reset. The Cortex-M0+ application interrupt and reset control register (CM0P_AIRCR) forces a device reset when a ‘1’ is written into the SYSRESETREQ bit. CM0P_AIRCR requires a value of 05FA written to the top two bytes for writes. Therefore, write A05F0004 for the reset.

The RESET_SOFT status bit of the RES_CAUSE register is set when a software reset occurs. This bit remains set until cleared or until a POR, XRES, or BOD reset; for example, in the case of a device power cycle. All other resets leave this bit untouched.

12.1.5 External Reset

External reset (XRES) is a user-supplied reset that causes immediate system reset when asserted. The XRES pin is ***active low*** – a high voltage on the pin has no effect and a low voltage causes a reset. The pin is pulled high inside the device. XRES is available as a dedicated pin in most of the devices. For detailed pinout, refer to the pinout section of the device datasheet.

The XRES pin holds the device in reset while held active. When the pin is released, the device goes through a normal boot sequence. The logical thresholds for XRES and other electrical characteristics, are listed in the Electrical Specifications section of the device datasheet.

XRES events do not set a reset cause status bit, but can be partially inferred by the absence of any other reset source. If no other reset event is detected, then the reset is caused by POR, BOD, or XRES.

12.1.6 Protection Fault Reset

Protection fault reset (PROT_FAULT) detects unauthorized protection violations and causes a device reset if they occur. One example of a protection fault is if a debug breakpoint is reached while executing privileged code. For details about privilege code, see “Privileged” on page 66.

The RESET_PROT_FAULT bit of the RES_CAUSE register is set when a protection fault occurs. This bit remains set until cleared or until a POR, XRES, or BOD reset; for example, in the case of a device power cycle. All other resets leave this bit untouched.

12.2 Identifying Reset Sources

When the device comes out of reset, it is often useful to know the cause of the most recent or even older resets. This is achieved in the device primarily through the RES_CAUSE register. This register has specific status bits allocated for some of the reset sources. The RES_CAUSE register supports detection of watchdog reset, software reset, and protection fault reset. It does not record the occurrences of POR, BOD, or XRES. The bits are set on the occurrence of the corresponding reset and remain set after the reset, until cleared or a loss of retention, such as a POR reset, external reset, or brownout detect.

If the RES_CAUSE register cannot detect the cause of the reset, then it can be one of the non-recorded and non-retention resets: BOD, POR, XRES. These resets cannot be distinguished using on-chip resources.

12.3 Register List

Table 12-1. Reset System Register List

Register Name	Description
WDT_DISABLE_KEY	Disables the WDT when 0XACED8865 is written, for any other value WDT works normally
CM0P_AIRCR	Cortex-M0+ Application Interrupt and Reset Control Register - This register allows initiation of software resets, among other Cortex-M0+ functions.
RES_CAUSE	Reset Cause Register - This register captures the cause of recent resets.

13. Device Security

PSoC® 4 offers a number of options for protecting user designs from unauthorized access or copying. Disabling debug features and enabling flash protection provide a high level of security.

The debug circuits are enabled by default and can only be disabled in firmware. If disabled, the only way to re-enable them is to erase the entire device, clear flash protection, and reprogram the device with new firmware that enables debugging. Additionally, all device interfaces can be permanently disabled for applications concerned about phishing attacks due to a maliciously reprogrammed device or attempts to defeat security by starting and interrupting flash programming sequences. Permanently disabling interfaces is not recommended for most applications because the designer cannot access the device. For more information, as well as a discussion on flash row and chip protection, see the CY8C4xxx, CYBLxxxx Programming Specification.

Note Because all programming, debug, and test interfaces are disabled when maximum device security is enabled, PSoC 4 devices with full device security enabled may not be returned for failure analysis.

13.1 Features

The PSoC 4 device security system has the following features:

- User-selectable levels of protection.
- In the most secure case provided, the chip can be “locked” such that it cannot be acquired for test/debug and it cannot enter erase cycles. Interrupting erase cycles is a known way for hackers to leave chips in an undefined state and open to observation.
- CPU execution in a privileged mode by use of the non-maskable interrupt (NMI). When in privileged mode, NMI remains asserted to prevent any inadvertent return from interrupt instructions causing a security leak.

In addition to these, the device offers protection for individual flash row data.

13.2 How It Works

13.2.1 Device Security

The CPU operates in normal user mode or in privileged mode, and the device operates in one of four protection modes: BOOT, OPEN, PROTECTED, and KILL. Each mode provides specific capabilities for the CPU software and debug. You can change the mode by writing to the CPUSS_PROTECTION register.

- **BOOT mode**: The device comes out of reset in BOOT mode. It stays there until its protection state is copied from supervisor flash to the protection control register (CPUSS_PROTECTION). The debug-access port is stalled until this has happened. BOOT is a transitory mode required to set the part to its configured protection state. During BOOT mode, the CPU always operates in privileged mode.
- **OPEN mode**: This is the factory default. The CPU can operate in user mode or privileged mode. In user mode, flash can be programmed and debugger features are supported. In privileged mode, access restrictions are enforced.
- **PROTECTED mode**: The user may change the mode from OPEN to PROTECTED. This mode disables all debug access to user code or memory. In protected mode, only few registers are accessible; debug access to registers to reprogram flash is not available. The mode can be set back to OPEN but only after completely erasing the flash.

- **KILL mode**: The user may change the mode from OPEN to KILL. This mode removes all debug access to user code or memory, and the flash cannot be erased. Access to most registers is still available; debug access to registers to reprogram flash is not available. The part cannot be taken out of KILL mode; devices in KILL mode may not be returned for failure analysis.

13.2.2 Flash Security

The PSoC 4 devices include a flexible flash-protection system that controls access to flash memory. This feature is designed to secure proprietary code, but it can also be used to protect against inadvertent writes to the bootloader portion of flash.

Flash memory is organized in rows. You can assign one of two protection levels to each row; see Table 13-1. Flash protection levels can only be changed by performing a complete flash erase.

For more details, see the Nonvolatile Memory Programming chapter on page 173.

Table 13-1. Flash Protection Levels

Protection Setting	Allowed	Not Allowed
Unprotected	External read and write, Internal read and write	–
Full Protection	External read[a] Internal read	External write, Internal write

a. To protect the device from external read operations, you should change the device protection settings to PROTECTED.

Section D: Digital System

This section encompasses the following chapters:

- Serial Communications Block (SCB) chapter on page 79
- Timer, Counter, and PWM chapter on page 121

Top Level Architecture

Digital System Block Diagram

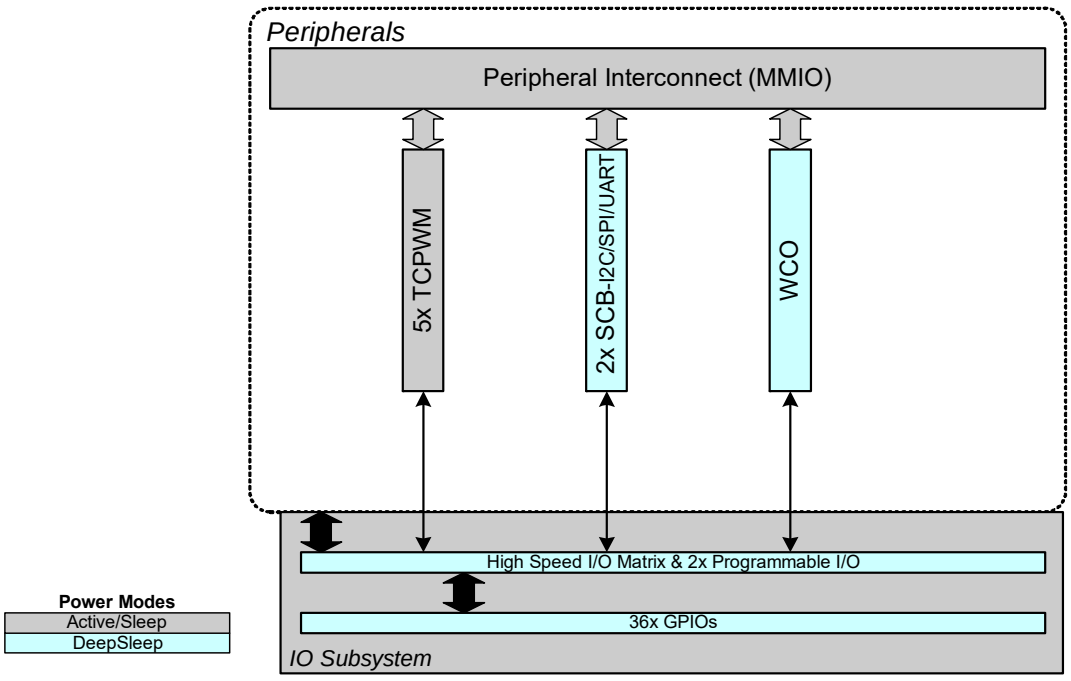

14. Serial Communications Block (SCB)

The Serial Communications Block (SCB) of PSoC® 4 supports three serial interface protocols: SPI, UART, and I²C. Only one of the protocols is supported by an SCB at any given time. PSoC devices have two SCBs.

14.1 Features

This block supports the following features:

- Standard SPI master and slave functionality with Motorola, Texas Instruments, and National Semiconductor protocols
- Standard UART functionality with SmartCard reader, Local Interconnect Network (LIN), and IrDA protocols
- Standard I²C master and slave functionality
- Standard LIN slave functionality with LIN v1.3 and LIN v2.1/2.2 specification compliance
- EZ mode for SPI and I²C, which allows for operation without CPU intervention
- Low-power (Deep-Sleep) mode of operation for SPI and I²C protocols (using external clocking)

Each of the three protocols is explained in the following sections.

14.2 Serial Peripheral Interface (SPI)

The SPI protocol is a synchronous serial interface protocol. Devices operate in either master or slave mode. The master initiates the data transfer. The SCB supports single-master-multiple-slaves topology for SPI. Multiple slaves are supported with individual slave select lines.

You can use the SPI master mode when the PSoC has to communicate with one or more SPI slave devices. The SPI slave mode can be used when the PSoC has to communicate with an SPI master device.

14.2.1 Features

- Supports master and slave functionality
- Supports three types of SPI protocols:
  - Motorola SPI – modes 0, 1, 2, and 3
  - Texas Instruments SPI, with coinciding and preceding data frame indicator for mode 1
  - National Semiconductor (MicroWire) SPI for mode 0
- Supports up to four slave select lines
- Data frame size programmable from 4 bits to 16 bits
- Interrupts or polling CPU interface
- Programmable oversampling
- Supports EZ mode of operation (Easy SPI Protocol)
  - EZSPI mode allows for operation without CPU intervention
- Supports externally clocked slave operation:
  - In this mode, the slave operates in Active, Sleep, and Deep-Sleep system power modes

14.2.2 General Description

Figure 14-1 illustrates an example of SPI master with four slaves.

Figure 14-1. SPI Example

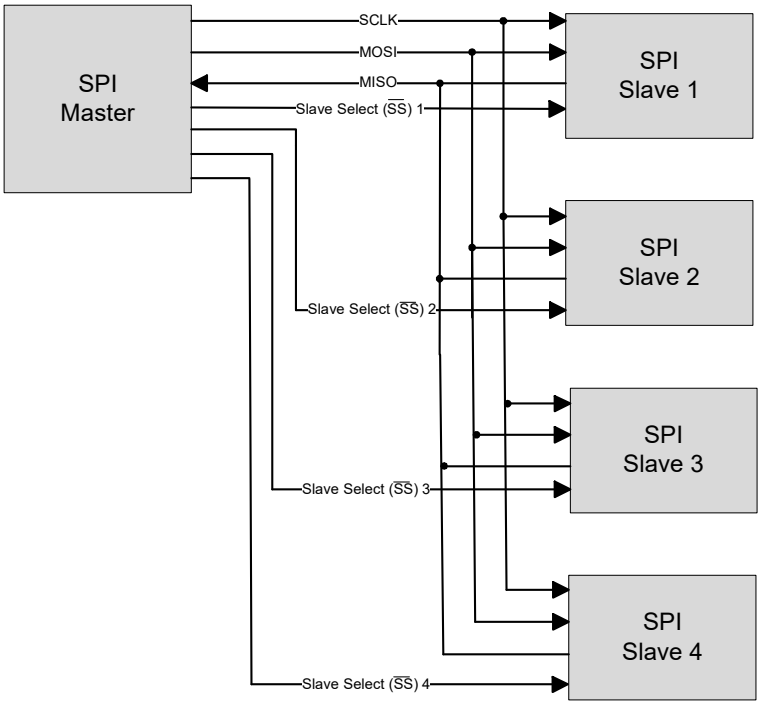

A standard SPI interface consists of four signals as follows.

- SCLK: Serial clock (clock output from the master, input to the slave).
- MOSI: Master-out-slave-in (data output from the master, input to the slave).
- MISO: Master-in-slave-out (data input to the master, output from the slave).
- Slave Select ($\overline{SS}$): Typically an active low signal (output from the master, input to the slave).

A simple SPI data transfer involves the following: the master selects a slave by driving its $\overline{SS}$ line, then it drives data on the MOSI line and a clock on the SCLK line. The slave uses either of the edges of SCLK depending on the configuration to capture the data on the MOSI line; it also drives data on the MISO line, which is captured by the master.

By default, the SPI interface supports a data frame size of eight bits (1 byte). The data frame size can be configured to any value in the range 4 to 16 bits. The serial data can be transmitted either most significant bit (MSb) first or least significant bit (LSB) first.

Three different variants of the SPI protocol are supported by the SCB:

- Motorola SPI: This is the original SPI protocol.
- Texas Instruments SPI: A variation of the original SPI protocol, in which data frames are identified by a pulse on the $\overline{SS}$ line.
- National Semiconductors SPI: A half duplex variation of the original SPI protocol.

14.2.3 SPI Modes of Operation

14.2.3.1 Motorola SPI

The original SPI protocol was defined by Motorola. It is a full duplex protocol. Multiple data transfers may happen with the $\overline{SS}$ line held at '0'. As a result, slave devices must keep track of the progress of data transfers to separate individual data frames. When not transmitting data, the $\overline{SS}$ line is held at '1' and SCLK is typically pulled low.

Modes of Motorola SPI

The Motorola SPI protocol has four different modes based on how data is driven and captured on the MOSI and MISO lines. These modes are determined by clock polarity (CPOL) and clock phase (CPHA).

Clock polarity determines the value of the SCLK line when not transmitting data. CPOL = '0' indicates that SCLK is '0' when not transmitting data. CPOL = '1' indicates that SCLK is '1' when not transmitting data.

Clock phase determines when data is driven and captured. CPHA=0 means sample (capture data) on the leading (first) clock edge, while CPHA=1 means sample on the trailing (second) clock edge, regardless of whether that clock edge is rising or falling. With CPHA=0, the data must be stable for setup time before the first clock cycle.

- Mode 0: CPOL is '0', CPHA is '0': Data is driven on a falling edge of SCLK. Data is captured on a rising edge of SCLK.
- Mode 1; CPOL is '0', CPHA is '1': Data is driven on a rising edge of SCLK. Data is captured on a falling edge of SCLK.
- Mode 2: CPOL is '1', CPHA is '0': Data is driven on a rising edge of SCLK. Data is captured on a falling edge of SCLK.
- Mode 3: CPOL is '1', CPHA is '1': Data is driven on a falling edge of SCLK. Data is captured on a rising edge of SCLK.

Figure 14-2 illustrates driving and capturing of MOSI/MISO data as a function of CPOL and CPHA.

Figure 14-2. SPI Motorola, 4 Modes

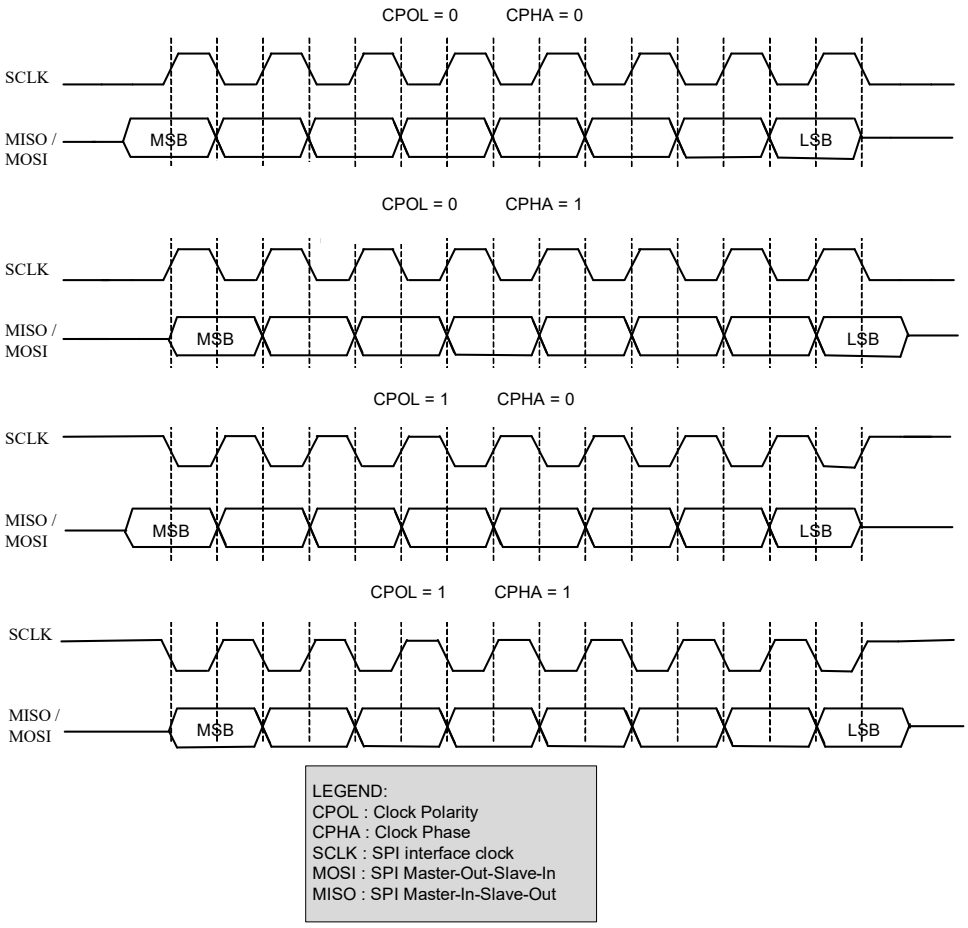

Figure 14-3 illustrates a single 8-bit data transfer and two successive 8-bit data transfers in mode 0 (CPOL is '0', CPHA is '0').

Figure 14-3. SPI Motorola Data Transfer Example

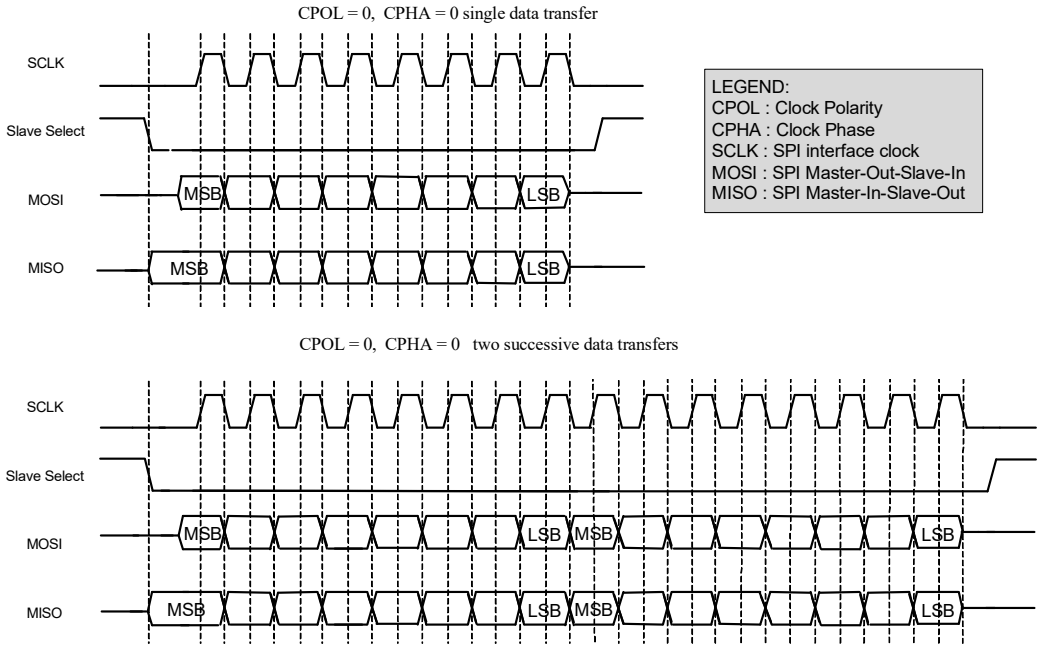

Configuring SCB for SPI Motorola Mode

To configure the SCB for SPI Motorola mode, set various register bits in the following order:

1. Select SPI by writing '01' to the MODE (bits [25:24]) of the SCB_CTRL register.
2. Select SPI Motorola mode by writing '00' to the MODE (bits [25:24]) of the SCB_SPI_CTRL register.
3. Select the mode of operation in Motorola by writing to the CPHA and CPOL fields (bits 2 and 3 respectively) of the SCB_SPI_CTRL register.
4. Follow steps 2 to 4 mentioned in “Enabling and Initializing SPI” on page 88.

Note that PSoC Creator does all this automatically with the help of GUIs. For more information on these registers, see the PSoC 4000S Family: PSoC 4 Registers TRM.

14.2.3.2 Texas Instruments SPI

The Texas Instruments' SPI protocol redefines the use of the $\overline{SS}$ signal. It uses the signal to indicate the start of a data transfer, rather than a low active slave select signal, as in the case of Motorola SPI. As a result, slave devices need not keep track of the progress of data transfers to separate individual data frames. The start of a transfer is indicated by a high active pulse of a single bit transfer period. This pulse may occur one cycle before the transmission of the first data bit, or may coincide with the transmission of the first data bit. The TI SPI protocol supports only mode 1 (CPOL is '0' and CPHA is '1'): data is driven on a rising edge of SCLK and data is captured on a falling edge of SCLK.

Figure 14-4 illustrates a single 8-bit data transfer and two successive 8-bit data transfers. The SELECT pulse precedes the first data bit. Note how the SELECT pulse of the second data transfer coincides with the last data bit of the first data transfer.

Figure 14-4. SPI TI Data Transfer Example

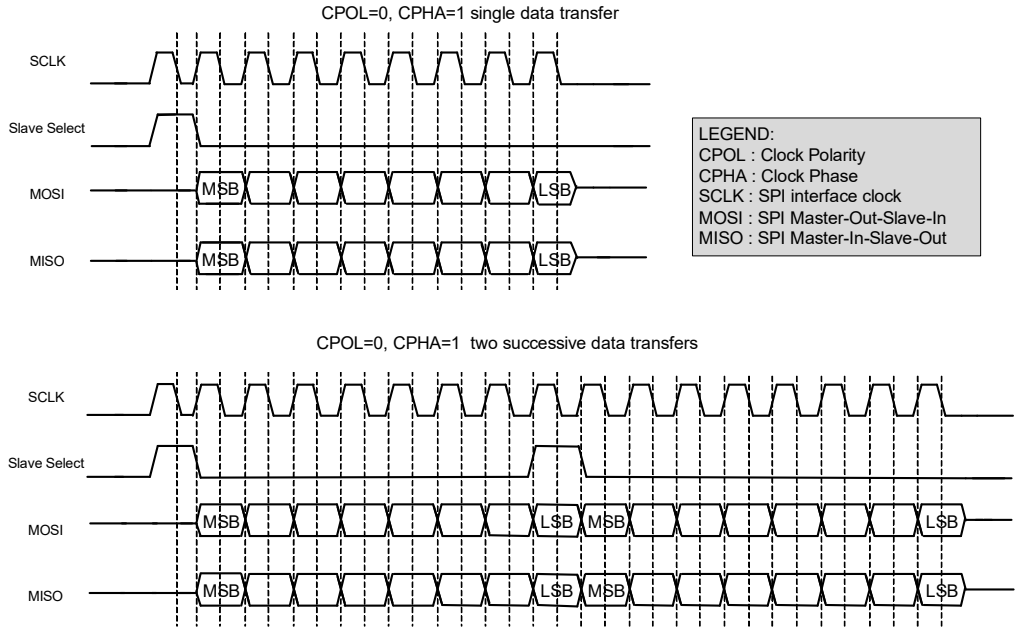

Figure 14-5 illustrates a single 8-bit data transfer and two successive 8-bit data transfers. The SELECT pulse coincides with the first data bit of a frame.

Figure 14-5. SPI TI Data Transfer Example

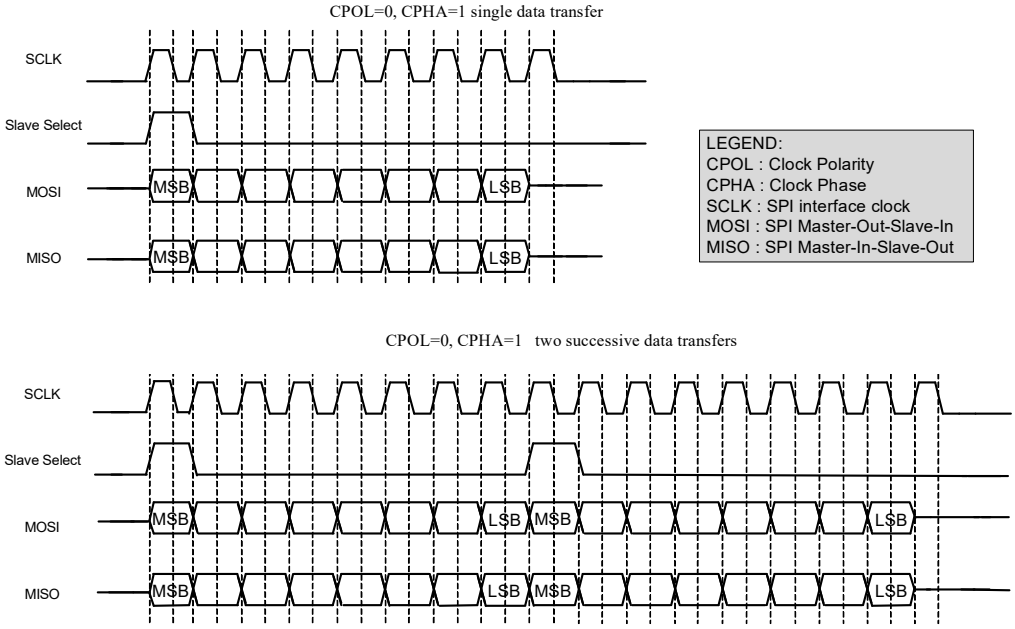

Configuring SCB for SPI TI Mode

To configure the SCB for SPI TI mode, set various register bits in the following order:

1. Select SPI by writing '01' to the MODE (bits [25:24]) of the SCB_CTRL register.
2. Select SPI TI mode by writing '01' to the MODE (bits [25:24]) of the SCB_SPI_CTRL register.
3. Select the mode of operation in TI by writing to the SELECT_PRECEDE field (bit 1) of the SCB_SPI_CTRL register ('1' configures the SELECT pulse to precede the first bit of next frame and '0' otherwise).
4. Follow steps 2 to 5 mentioned in “Enabling and Initializing SPI” on page 88.

Note that PSoC Creator does all this automatically with the help of GUIs. For more information on these registers, see the PSoC 4000S Family: PSoC 4 Registers TRM.

14.2.3.3 National Semiconductors SPI

The National Semiconductors' SPI protocol is a half duplex protocol. Rather than transmission and reception occurring at the same time, they take turns. The transmission and reception data sizes may differ. A single “idle” bit transfer period separates transmission from reception. However, the successive data transfers are NOT separated by an idle bit transfer period.

The National Semiconductors SPI protocol only supports mode 0: data is driven on a falling edge of SCLK and data is captured on a rising edge of SCLK.

Figure 14-6 illustrates a single data transfer and two successive data transfers. In both cases the transmission data transfer size is eight bits and the reception data transfer size is four bits.

Figure 14-6. SPI NS Data Transfer Example

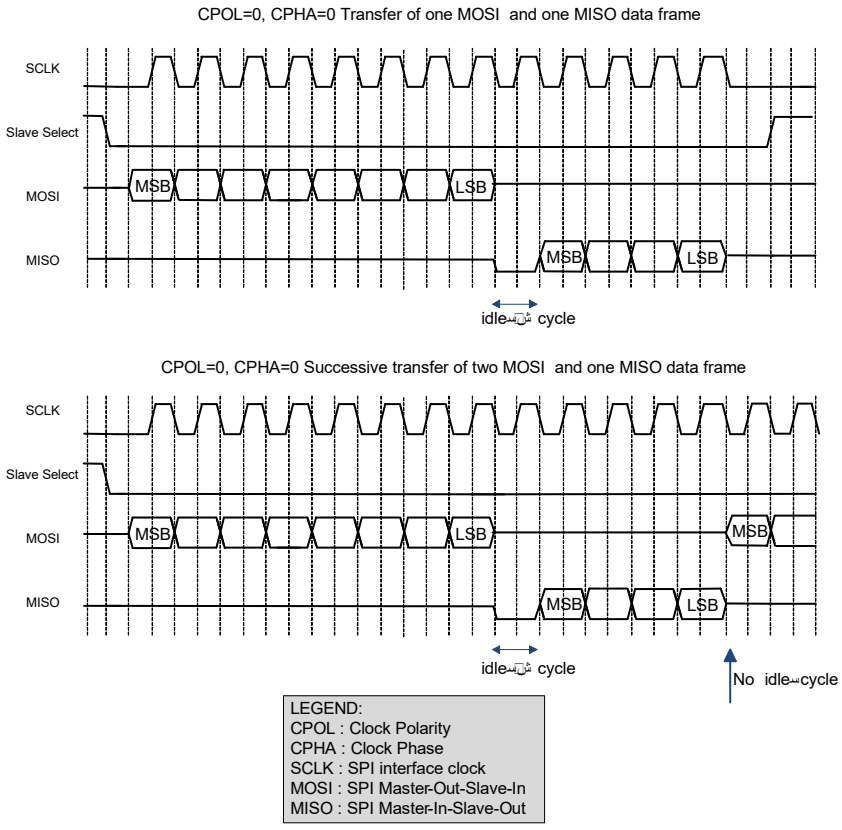

Configuring SCB for SPI NS Mode

To configure the SCB for SPI NS mode, set various register bits in the following order:

1. Select SPI by writing '01' to the MODE (bits [25:24]) of the SCB_CTRL register.
2. Select SPI NS mode by writing '10' to the MODE (bits [25:24]) of the SCB_SPI_CTRL register.
3. Follow steps 2 to 5 mentioned in “Enabling and Initializing SPI” on page 88.

Note that PSoC Creator does all this automatically with the help of Component customizers. For more information on these registers, see the PSoC 4000S Family: PSoC 4 Registers TRM.

14.2.4 Using SPI Master to Clock Slave

In a normal SPI Master mode transmission, the SCLK is generated only when the SCB is enabled and data is being transmitted. This can be changed to always generate a clock on the SCLK line as long as the SCB is enabled. This is used when the slave uses the SCLK for functional operations other than just the SPI functionality. To enable this, write '1' to the SCLK_CONTINUOUS (bit 5) of the SCB_SPI_CTRL register.

14.2.5 Easy SPI Protocol

The easy SPI (EZSPI) protocol is based on the Motorola SPI operating in any mode (0, 1, 2, 3). It allows communication between master and slave without the need for CPU intervention at the level of individual frames.

The EZSPI protocol defines an 8-bit EZ address that indexes a memory array (32-entry array of eight bit per entry is supported) located on the slave device. To address these 32 locations, the lower five bits of the EZ address are used. All EZSPI data transfers have 8-bit data frames.

Note The SCB has a FIFO memory, which is a 16 word by 16-bit SRAM, with byte write enable. The access methods for EZ and non-EZ functions are different. In non-EZ mode, the FIFO is split into TXFIFO and RXFIFO. Each has eight entries of 16 bits per entry. The 16-bit width per entry is used to accommodate configurable data width. In EZ mode, it is used as a single 32x8 bit EZFIFO because only a fixed 8-bit width data is used in EZ mode.

EZSPI has three types of transfers: a write of the EZ address from the master to the slave, a write of data from the master to an addressed slave memory location, and a read by the master from an addressed slave memory location.

14.2.5.1 EZ Address Write

A write of the EZ address starts with a command byte (0x00) on the MOSI line indicating the master's intent to write the EZ address. The slave then drives a reply byte on the MISO line to indicate that the command is observed (0xFE) or not (0xFF). The second byte on the MOSI line is the EZ address.

14.2.5.2 Memory Array Write

A write to a memory array index starts with a command byte (0x01) on the MOSI line indicating the master's intent to write to the memory array. The slave then drives a reply byte on the MISO line to indicate that the command was registered (0xFE) or not (0xFF). Any additional write data bytes on the MOSI line are written to the memory array at locations indicated by the communicated EZ address. The EZ address is automatically incremented by the slave as bytes are written into the memory array. When the EZ address exceeds the maximum number of memory entries (32), it remains there and does not wrap around to 0.

14.2.5.3 Memory Array Read

A read from a memory array index starts with a command byte (0x02) on the MOSI line indicating the master's intent to read from the memory array. The slave then drives a reply byte on the MISO line to indicate that the command was registered (0xFE) or not (0xFF). Any additional read data bytes on the MISO line are read from the memory array at locations indicated by the communicated EZ address. The EZ address is automatically incremented by the slave as bytes are read from the memory array. When the EZ address exceeds the maximum number of memory entries (32), it remains there and does not wrap around to 0.

Figure 14-7 illustrates the write of EZ address, write to a memory array and read from a memory array operations in the EZSPI protocol.

Figure 14-7. EZSPI Example

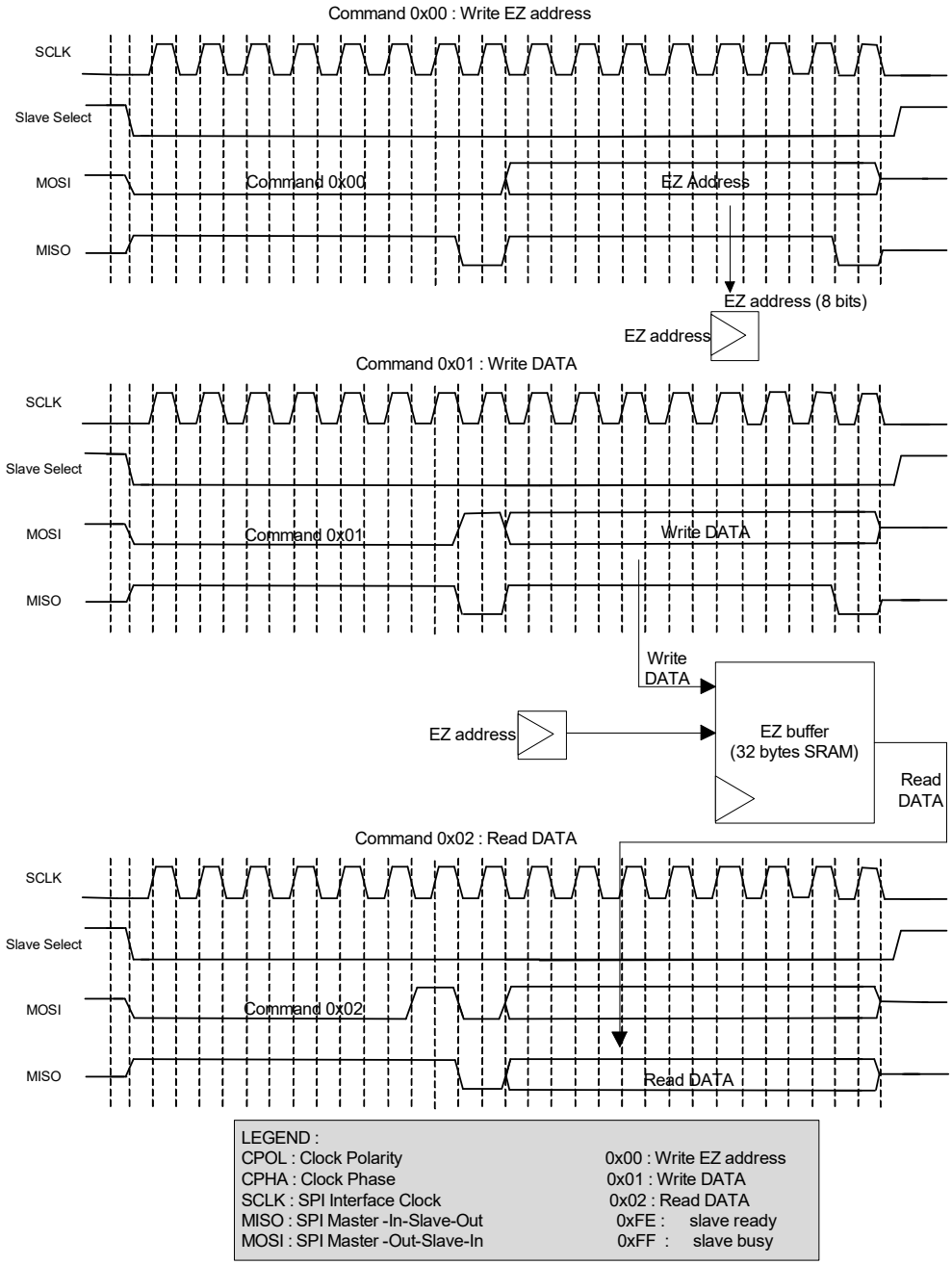

14.2.5.4 Configuring SCB for EZSPI Mode

By default, the SCB is configured for non-EZ mode of operation. To configure the SCB for EZSPI mode, set the register bits in the following order:

1. Select EZ mode by writing '1' to the EZ_MODE bit (bit 10) of the SCB_CTRL register.
2. Use continuous transmission mode for the transmitter by writing '1' to the CONTINUOUS bit of SCB_SPI_CTRL register.
3. Follow steps 2 to 5 mentioned in “Enabling and Initializing SPI” on page 88.

Note that PSoC Creator does all this automatically with the help of Component customizers. For more information on these registers, see the PSoC 4000S Family: PSoC 4 Registers TRM.

14.2.6 SPI Registers

The SPI interface is controlled using a set of 32-bit control and status registers listed in Table 14-1. For more information on these registers, see the PSoC 4000S Family: PSoC 4 Registers TRM.

Table 14-1. SPI Registers

Register Name	Operation
SCB_CTRL	Enables the SCB, selects the type of serial interface (SPI, UART, I^2C), and selects internally and externally clocked operation, EZ and non-EZ modes of operation.
SCB_STATUS	In EZ mode, this register indicates whether the externally clocked logic is potentially using the EZ memory.
SCB_SPI_CTRL	Configures the SPI as either a master or a slave, selects SPI protocols (Motorola, TI, National) and clock-based submodes in Motorola SPI (modes 0,1, 2, 3), selects the type of SELECT signal in TI SPI. When SPI works as slave mode, only the first chip select pin SPI_SELECT[0] can be used in slave mode.
SCB_SPI_STATUS	Indicates whether the SPI bus is busy and sets the SPI slave EZ address in the internally clocked mode.
SCB_TX_CTRL	Specifies the data frame width and specifies whether MSB or LSB is the first bit in transmission.
SCB_RX_CTRL	Performs the same function as that of the SCB_TX_CTRL register, but for the receiver. Also decides whether a median filter is to be used on the input interface lines.
SCB_TX_FIFO_CTRL	Specifies the trigger level, clears the transmitter FIFO and shift registers, and performs the FREEZE operation of the transmitter FIFO.
SCB_RX_FIFO_CTRL	Performs the same function as that of the SCB_TX_FIFO_CTRL register, but for the receiver.
SCB_TX_FIFO_WR	Holds the data frame written into the transmitter FIFO. Behavior is similar to that of a PUSH operation.
SCB_RX_FIFO_RD	Holds the data frame read from the receiver FIFO. Reading a data frame removes the data frame from the FIFO - behavior is similar to that of a POP operation. This register has a side effect when read by software: a data frame is removed from the FIFO.
SCB_RX_FIFO_RD_SILENT	Holds the data frame read from the receiver FIFO. Reading a data frame does not remove the data frame from the FIFO; behavior is similar to that of a PEEK operation.
SCB_RX_MATCH	Holds the slave device address and mask values.
SCB_TX_FIFO_STATUS	Indicates the number of bytes stored in the transmitter FIFO, the location from which a data frame is read by the hardware (read pointer), the location from which a new data frame is written (write pointer), and decides if the transmitter FIFO holds the valid data.
SCB_RX_FIFO_STATUS	Performs the same function as that of the SCB_TX_FIFO_STATUS register, but for the receiver.
SCB_EZ_DATA	Holds the data in EZ memory location

14.2.7 SPI Interrupts

The SPI supports both internal and external interrupt requests. The internal interrupt events are listed here. PSoC Creator generates the necessary interrupt service routines (ISRs) for handling buffer management interrupts. Custom ISRs can also be used by connecting external interrupt component to the interrupt output of the SPI component (with external interrupts enabled).

The SPI predefined interrupts can be classified as TX interrupts and RX interrupts. The TX interrupt output is the logical OR of the group of all possible TX interrupt sources. This signal goes high when any of the enabled TX interrupt sources are true. The RX interrupt output is the logical OR of the group of all possible RX interrupt sources. This signal goes high when any of the enabled Rx interrupt sources are true. Various interrupt registers are used to determine the actual source of the interrupt.

The SPI supports interrupts on the following events:

- SPI master transfer done
- SPI Bus Error - Slave deselected at an unexpected time in the SPI transfer
- SPI slave deselected after any EZSPI transfer occurred
- SPI slave deselected after a write EZSPI transfer occurred

- TX
  - TX FIFO has less entries than the value specified by TRIGGER_LEVEL in SCB_TX_FIFO_CTRL
  - TX FIFO is not full
  - TX FIFO is empty
  - TX FIFO overflow
  - TX FIFO underflow
- RX
  - RX FIFO is full
  - RX FIFO is not empty
  - RX FIFO overflow
  - RX FIFO underflow
- SPI Externally clocked
  - Wake up request on slave select
  - SPI STOP detection at the end of each transfer
  - SPI STOP detection at the end of a write transfer
  - SPI STOP detection at the end of a read transfer

Note The SPI interrupt signal is hard-wired to the Cortex-M0 NVIC and cannot be routed to external pins.

14.2.8 Enabling and Initializing SPI

The SPI must be programmed in the following order:

1. Program protocol specific information using the SCB_SPI_CTRL register, according to Table 14-3. This includes selecting the submodes of the protocol and selecting master-slave functionality. EZSPI can be used with slave mode only.
2. Program the generic transmitter and receiver information using the SCB_TX_CTRL and SCB_RX_CTRL registers, as shown in Table 14-4:
   a. Specify the data frame width. This should always be 8 for EZSPI.
   b. Specify whether MSB or LSB is the first bit to be transmitted/received. This should always be MSB first for EZSPI.
3. Program the transmitter and receiver FIFOs using the SCB_TX_FIFO_CTRL and SCB_RX_FIFO_CTRL registers respectively, as shown in Table 14-5:
   a. Set the trigger level.
   b. Clear the transmitter and receiver FIFO and Shift registers.
   c. Freeze the TX and RX FIFO.
4. Program SCB_CTRL register to enable the SCB block. Also select the mode of operation. These register bits are shown in Table 14-2.
5. Enable the block (write a '1' to the ENABLED bit of the SCB_CTRL register). After the block is enabled, control bits should not be changed. Changes should be made after disabling the block; for example, to modify the operation mode (from Motorola mode to TI mode) or to go from externally clocked to internally clocked operation. The change takes effect only after the block is re-enabled. Note that re-enabling the block causes re-initialization and the associated state is lost (for example, FIFO content).

Table 14-2. SCB_CTRL Register

Bits	Name	Value	Description
[25:24]	MODE	00	I^2C mode
		01	SPI mode
		10	UART mode
		11	Reserved
31	ENABLED	0	SCB block disabled
		1	SCB block enabled

Table 14-3. SCB_SPI_CTRL Register

Bits	Name	Value	Description
[25:24]	MODE	00	SPI Motorola submode. (This is the only mode supported for EZSPI.)
		01	SPI Texas Instruments submode.
		10	SPI National Semiconductors submode.
		11	Reserved.
31	MASTER_MODE	0	Slave mode. (This is the only mode supported for EZSPI.)
		1	Master mode.

Table 14-4. SCB_TX_CTRL/SCB_RX_CTRL Registers

Bits	Name	Description
[3:0]	DATA_ WIDTH	'DATA_WIDTH + 1' is the number of bits in the transmitted or received data frame. The valid range is [3, 15]. This does not include start, stop, and parity bits. For EZSPI, this value should be '0b0111'
8	MSB_FIRST	1 = MSB first 0 = LSB firstFor EZSPI, this value should be 1.
9	MEDIAN	This is for SCB_RX_CTRL only. Decides whether a digital three-tap median filter is applied on the input interface lines. This filter should reduce susceptibility to errors, but it requires higher oversampling values. 1 = Enabled 0 = Disabled

Table 14-5. SCB_TX_FIFO_CTRL/SCB_RX_FIFO_CTRL Registers

Bits	Name	Description
[7:0]	TRIGGER_LEVEL	Trigger level. When the transmitter FIFO has less entries or receiver FIFO has more entries than the value of this field, a transmitter or receiver trigger event is generated in the respective case.
16	CLEAR	When '1', the transmitter or receiver FIFO and the shift registers are cleared.
17	FREEZE	When '1', hardware reads/writes to the transmitter or receiver FIFO have no effect. Freeze does not advance the TX or RX FIFO read/write pointer.

14.2.9 Internally and Externally Clocked SPI Operations

The SCB supports both internally and externally clocked operations for SPI and I^2C functions. An internally clocked operation uses a clock provided by the chip. An externally clocked operation uses a clock provided by the serial interface. Externally clocked operation enables operation in the Deep-Sleep system power mode.

Internally clocked operation uses the high-frequency clock (HFCLK) of the system. For more information on system clocking, see the Clocking System chapter on page 56. It also supports oversampling. Oversampling is implemented with respect to the high-frequency clock. The OVS (bits [3:0]) of the SCB_CTRL register specify the oversampling.

In SPI master mode, the valid range for oversampling is 4 to 16. Hence, with a clock speed of 48 MHz, the maximum bit rate is 12 Mbps. However, if you consider the I/O cell and routing delays, the oversampling must be set between 6 and 16 for proper operation. So, the maximum bit rate is 8 Mbps. **Note** To achieve maximum possible bit rate, LATE_MISO_SAMPLE must be set to '1' in SPI master mode. This has a default value of '0'.

In SPI slave mode, the OVS field (bits [3:0]) of SCB_CTRL register is not used. However, there is a frequency requirement for the SCB clock with respect to the interface clock (SCLK). This requirement is expressed in terms of the ratio (SCB clock/SCLK). This ratio is dependent on two fields: MEDIAN of SCB_RX_CTRL register and LATE_MISO_SAMPLE of SCB_CTRL register. If the external SPI master supports Late MISO sampling and if the median bit is set to '0', the maximum data rate that can be achieved is 16 Mbps. If the external SPI master does not support late MISO sampling, the maximum data rate is limited to 8 Mbps (with the median bit set to '0'). Based on these bits, the maximum bit rates are given in Table 14-6.

Table 14-6. SPI Slave Maximum Data Rates

Maximum Bit Rate at Peripheral Clock of 48 MHz	Ratio Requirement	Median of SCB_RX_CTRL	LATE_MISO_SAMPLE of SCB_CTRL
8 Mbps	≥6	0	1
6 Mbps	≥8	1	1
4 Mbps	≥12	0	0
3 Mbps	≥16	1	0

Externally clocked operation is limited to:

- Slave functionality.
- EZ functionality. EZ functionality uses the block's SRAM as a memory structure. Non-EZ functionality uses the block's SRAM as TX and RX FIFOs; FIFO support is not available in externally clocked operation.
- Motorola mode 0, 1, 2, 3.

Externally clocked EZ mode of operation can support a data rate of 48 Mbps (at the interface clock of 48 MHz).

Internally and externally clocked operation is determined by two register fields of the SCB_CTRL register:

- **EC_AM_MODE:** Indicates whether SPI slave selection is internally ('0') or externally ('1') clocked. SPI slave selection comprises the first part of the protocol.
- **EC_OP_MODE:** Indicates whether the rest of the protocol operation (besides SPI slave selection) is internally ('0') or externally ('1') clocked. As mentioned earlier, externally clocked operation does NOT support non-EZ functionality.

These two register fields determine the functional behavior of SPI. The register fields should be set based on the required behavior in Active, Sleep, and Deep-Sleep system power mode. Improper setting may result in faulty behavior in certain system power modes. Table 14-7 and Table 14-8 describe the settings for SPI (in non-EZ and EZ modes).

14.2.9.1 Non-EZ Mode of Operation

In non-EZ mode there are two possible settings. As externally clocked operation is not supported for non-EZ functionality (no FIFO support), EC_OP_MODE should always be set to '0'. However, EC_AM_MODE can be set to '0' or '1'. Table 14-7 gives an overview of the possibilities.

Table 14-7. SPI Operation in Non-EZ Mode

SPI (non-EZ)Mode				
System Power Mode	EC_OP_MODE = 0		EC_OP_MODE = 1	
	EC_AM_MODE = 0	EC_AM_MODE = 1	EC_AM_MODE = 0	EC_AM_MODE = 1
Active and Sleep	Selection using internal clock. Operation using internal clock.	Selection using external clock: Operation using internal clock. In Active mode, the Wakeup interrupt cause is disabled (MASK = 0). In Sleep mode, the MASK bit can be configured by the user.	Not supported	Not supported
Deep-Sleep	Not supported	Selection using external clock: Wakeup interrupt cause is enabled (MASK = 1). Send 0xFF.		

EC_OP_MODE is '0' and EC_AM_MODE is '0': This setting only works in Active and Sleep system power modes. The entire block's functionality is provided in the internally clocked domain.

EC_OP_MODE is '0' and EC_AM_MODE is '1': This setting works in Active and Sleep system power mode and provides limited (wake up) functionality in Deep-Sleep system power mode. SPI slave selection is performed by the externally clocked logic: in Active system power mode, both internally and externally clocked logic are active, and in Deep-Sleep system power mode, only the externally clocked logic is active. When the externally clocked logic detects slave selection, it sets a wakeup interrupt cause bit, which can be used to generate an interrupt to wake up the CPU.

- In Active system power mode, the CPU and the block's internally clocked operation are active and the wakeup interrupt cause is disabled (associated MASK bit is '0'). But in the Sleep mode, wakeup interrupt cause can be either enabled or disabled (MASK bit can be either '1' or '0') based on the application. The remaining operations in the Sleep mode are same as that of the Active mode. The internally clocked operation takes care of the ongoing SPI transfer.
- In Deep-Sleep system power mode, the CPU needs to be woken up and the wakeup interrupt cause is enabled (MASK bit is '1'). Waking up takes time, so the ongoing SPI transfer is negatively acknowledged ('1' bit or "0xFF" byte is sent out on the MISO line) and the internally clocked operation takes care of the next SPI transfer when it is woken up.

14.2.9.2 EZ Mode of Operation

EZ mode has three possible settings. EC_AM_MODE can be set to '0' or '1' when EC_OP_MODE is '0' and EC_AM_MODE must be set to '1' when EC_OP_MODE is '1'. Table 14-8 gives an overview of the possibilities. The grey cells indicate a possible, yet not recommended, setting because it involves a switch from the externally clocked logic (slave selection) to the internally clocked logic (rest of the operation). The combination EC_AM_MODE=0 and EC_OP_MODE=1 is invalid and the block will not respond.

Table 14-8. SPI Operation in EZ Mode

SPI, EZ Mode				
System Power Mode	EC_OP_MODE = 0		EC_OP_MODE = 1	
	EC_AM_MODE = 0	EC_AM_MODE = 1	EC_AM_MODE = 0	EC_AM_MODE = 1
Active and Sleep	Selection using internal clock. Operation using internal clock.	Selection using external clock. Operation using internal clock. In Active mode, the Wakeup interrupt cause is disabled (MASK = 0). In Sleep mode, the MASK bit can be configured by the user.	Invalid	Selection using external clock. Operation using external clock.
Deep-Sleep	Not supported	Selection using external clock: Wakeup interrupt cause is enabled (MASK = 1). Send 0xFF.		Selection using external clock. Operation using external clock.

EC_OP_MODE is '0' and EC_AM_MODE is '0': This setting only works in Active and Sleep system power modes. The entire block's functionality is provided in the internally clocked domain.

EC_OP_MODE is '0' and EC_AM_MODE is '1': This setting works in Active and Sleep system power modes and provides limited (wake up) functionality in Deep-Sleep system power mode. SPI slave selection is performed by the externally clocked logic: in Active system power mode, both internally and externally clocked logic are active, and in Deep-Sleep system power mode, only the externally clocked logic is active. When the externally clocked logic detects slave selection, it sets a wakeup interrupt cause bit, which can be used to generate an interrupt to wake up the CPU.

- In Active system power mode, the CPU and the block's internally clocked operation are active and the wakeup interrupt cause is disabled (associated MASK bit is '0'). But in Sleep mode, wakeup interrupt cause can be either enabled or disabled (MASK bit can be either '1' or '0') based on the application. The remaining operations in the Sleep mode are same as that of the Active mode. The internally clocked operation takes care of the ongoing SPI transfer.
- In Deep-Sleep system power mode, the CPU needs to be woken up and the wakeup interrupt cause is enabled (MASK bit is '1'). Waking up takes time, so the ongoing SPI transfer is negatively acknowledged ('1' bit or “0xFF” byte is sent out on the MISO line) and the internally clocked operation takes care of the next SPI transfer when it is woken up.

EC_OP_MODE is '1' and EC_AM_MODE is '1': This setting works in Active, Sleep, and Deep-Sleep system power modes. The SCB functionality is provided in the externally clocked domain. Note that this setting results in externally clocked accesses to the block's SRAM. These accesses may conflict with internally clocked accesses from the device. This may cause wait states or bus errors. The field FIFO_BLOCK of the SCB_CTRL register determines whether wait states ('1') or bus errors ('0') are generated.

14.3 UART

The Universal Asynchronous Receiver/Transmitter (UART) protocol is an asynchronous serial interface protocol. UART communication is typically point-to-point. The UART interface consists of two signals:

- TX: Transmitter output
- RX: Receiver input

14.3.1 Features

- Asynchronous transmitter and receiver functionality
- Supports a maximum data rate of 3 Mbps
- Supports UART protocol
  - Standard UART
  - SmartCard (ISO7816) reader.
  - IrDA
- Supports Local Interconnect Network (LIN)
  - Break detection
  - Baud rate detection
  - Collision detection (ability to detect that a driven bit value is not reflected on the bus, indicating that another component is driving the same bus)
- Multi-processor mode
- Data frame size programmable from 4 to 9 bits
- Programmable number of STOP bits, which can be set in terms of half bit periods between 1 and 4
- Parity support (odd and even parity)
- Interrupt or polling CPU interface
- Programmable oversampling

14.3.2 General Description

Figure 14-8 illustrates a standard UART TX and RX.

Figure 14-8. UART Example

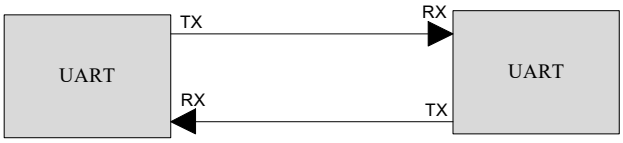

A typical UART transfer consists of a “Start Bit” followed by multiple "Data Bits", optionally followed by a “Parity Bit” and finally completed by one or more “Stop Bits”. The Start and Stop bits indicate the start and end of data transmission. The Parity bit is sent by the transmitter and is used by the receiver to detect single bit errors. As the interface does not have a clock (asynchronous), the transmitter and receiver use their own clocks; also, they need to agree upon the period of a bit transfer.

Three different serial interface protocols are supported:

- Standard UART protocol
  - Multi-Processor Mode
  - Local Interconnect Network (LIN)
- SmartCard, similar to UART, but with a possibility to send a negative acknowledgement
- IrDA, modification to the UART with a modulation scheme

By default, UART supports a data frame width of eight bits. However, this can be configured to any value in the range of 4 to 9. This does not include start, stop, and parity bits. The number of stop bits can be in the range of 1 to 4. The parity bit can be either enabled or disabled. If enabled, the type of parity can be set to either even parity or odd parity. The option of using the parity bit is available only in the Standard UART and SmartCard UART modes. For IrDA UART mode, the parity bit is automatically disabled. Figure 14-9 depicts the default configuration of the UART interface of the SCB.

Note UART interface does not support external clocking operation. Hence, UART operates only in the Active and Sleep system power modes.

14.3.3 UART Modes of Operation

14.3.3.1 Standard Protocol

A typical UART transfer consists of a start bit followed by multiple data bits, optionally followed by a parity bit and finally completed by one or more stop bits. The start bit value is always '0', the data bits values are dependent on the data transferred, the parity bit value is set to a value guaranteeing an even or odd parity over the data bits, and the stop bit value is '1'. The parity bit is generated by the transmitter and can be used by the receiver to detect single bit transmission errors. When not transmitting data, the TX line is '1' – the same value as the stop bits.

Because the interface does not have a clock, the transmitter and receiver need to agree upon the period of a bit transfer. The transmitter and receiver have their own internal clocks. The receiver clock runs at a higher frequency than the bit transfer frequency, such that the receiver may oversample the incoming signal.

The transition of a stop bit to a start bit is represented by a change from '1' to '0' on the TX line. This transition can be used by the receiver to synchronize with the transmitter clock. Synchronization at the start of each data transfer allows error-free transmission even in the presence of frequency drift between transmitter and receiver clocks. The required clock accuracy is dependent on the data transfer size.

The stop period or the amount of stop bits between successive data transfers is typically agreed upon between transmitter and receiver, and is typically in the range of 1 to 3-bit transfer periods. Figure 14-9 illustrates the UART protocol.

Figure 14-9. UART, Standard Protocol Example

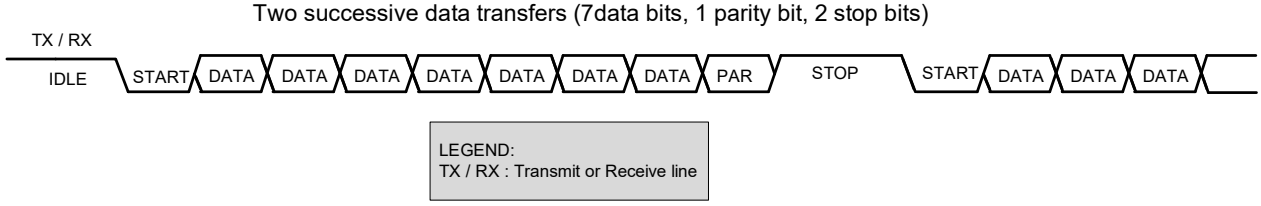

The receiver oversamples the incoming signal; the value of the sample point in the middle of the bit transfer period (on the receiver's clock) is used. Figure 14-10 illustrates this.

Figure 14-10. UART, Standard Protocol Example (Single Sample)

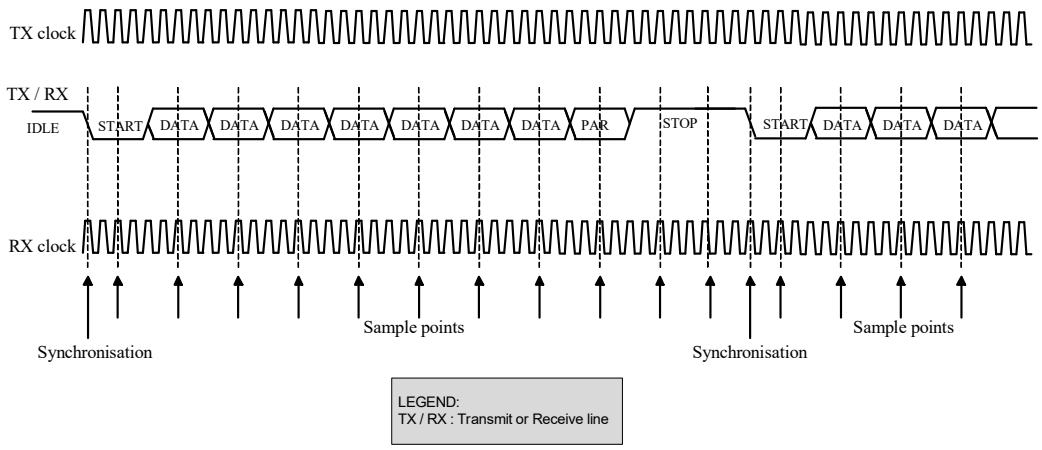

Alternatively, three samples around the middle of the bit transfer period (on the receiver's clock) are used for a majority vote to increase accuracy. Figure 14-11 illustrates this.

Figure 14-11. UART, Standard Protocol (Multiple Samples)

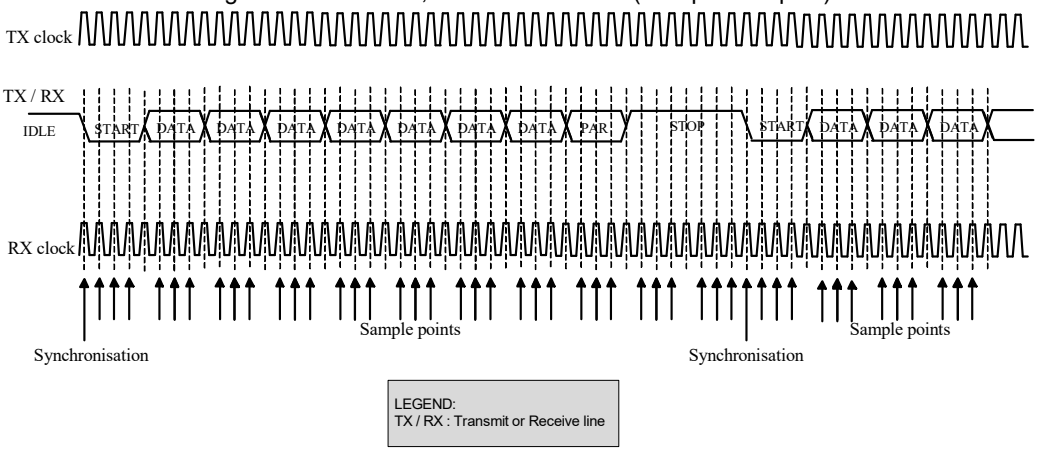

UART Multi-Processor Mode

The UART_MP (multi-processor) mode is defined with single-master-multi-slave topology, as Figure 14-12 shows. This mode is also known as UART 9-bit protocol because the data field is nine bits wide. UART_MP is part of Standard UART mode.

Figure 14-12. UART MP Mode Bus Connections

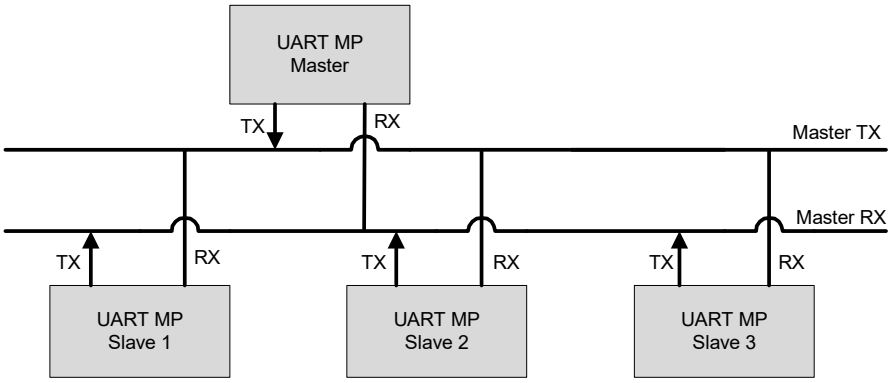

The main properties of UART_MP mode are:

- Single master with multiple slave concept (multi-drop network).
- Each slave is identified by a unique address.
- Using 9-bit data field, with the ninth bit as address/data flag (MP bit). When set high, it indicates an address byte; when set low it indicates a data byte. A data frame is illustrated in Figure 14-13.
- Parity bit is disabled.

Figure 14-13. UART MP Data Frame



The SCB can be used as either master or slave device in UART_MP mode. Both SCB_TX_CTRL and SCB_RX_CTRL registers should be set to 9-bit data frame size. When the SCB works as UART_MP master device, the firmware changes the MP flag for every address or data frame. When it works as UART_MP slave device, the MP_MODE field of the SCB_UART_RX_CTRL register should be set to '1'. The SCB_RX_MATCH register should be set for the slave address and address mask.

The matched address is written in the RX_FIFO when ADDR_ACCEPT field of the SCB_CTRL register is set to '1'. If received address does not match its own address, then the interface ignores the following data, until next address is received for compare.

UART Local Interconnect Network (LIN) Mode

The LIN protocol is supported by the SCB as part of the standard UART. LIN is designed with single-master-multi-slave topology. There is one master node and multiple slave nodes on the LIN bus. The SCB UART supports both LIN master and slave functionality. The LIN specification defines both physical layer (layer 1) and data link layer (layer 2). Figure 14-14 illustrates the UART_LIN and LIN Transceiver.

Figure 14-14. UART_LIN and LIN Transceiver

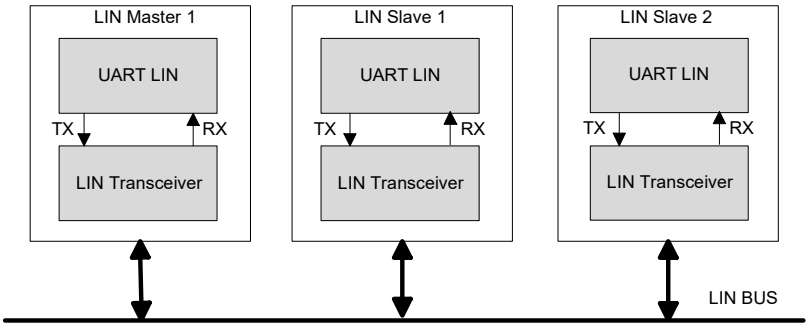

LIN protocol defines two tasks:

- Master task: This task involves sending a header packet to initiate a LIN transfer.
- Slave task: This task involves transmitting or receiving a response.

The master node supports master task and slave task; the slave node supports only slave task, as shown in Figure 14-15.

Figure 14-15. LIN Bus Nodes and Tasks

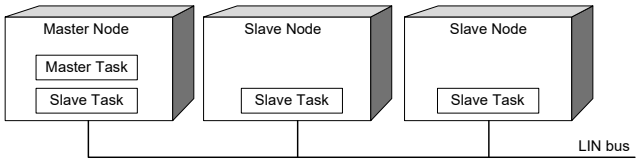

LIN Frame Structure

LIN is based on the transmission of frames at pre-determined moments of time. A frame is divided into header and response fields, as shown in Figure 14-16.

- The header field consists of:
  - Break field (at least 13 bit periods with the value '0').
  - Sync field (a 0x55 byte frame). A sync field can be used to synchronize the clock of the slave task with that of the master task.
  - Identifier field (a frame specifying a specific slave).
- The response field consists of data and checksum.

Figure 14-16. LIN Frame Structure

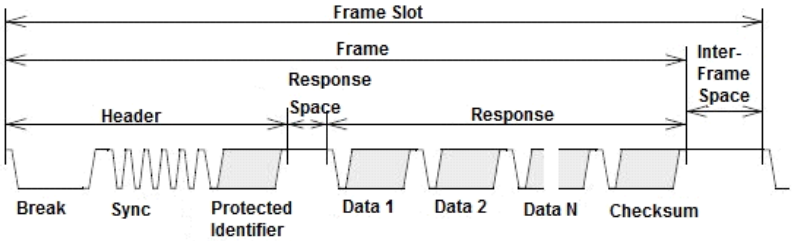

In LIN protocol communication, the least significant bit (LSB) of the data is sent first and the most significant bit (MSB) last. The start bit is encoded as zero and the stop bit is encoded as one. The following sections describe all the byte fields in the LIN frame.

Break Field

Every new frame starts with a break field, which is always generated by the master. The break filed has logical zero with a minimum of 13 bit times and followed by a break delimiter. The break field structure is as shown in Figure 14-17.

Figure 14-17. LIN Break Field



Sync Field

This is the second field transmitted by the master in the header field; its value is 0x55. A sync field can be used to synchronize the clock of the slave task with that of the master task for automatic baud rate detection. Figure 14-18 shows the LIN sync field structure.

Figure 14-18. LIN Sync Field



Protected identifier (PID) Field

A protected identifier field consists of two sub-fields: the frame identifier (bits 0-5) and the parity (bit 6 and bit 7). The PID field structure is shown in Figure 14-19.

- Frame identifier: The frame identifiers are split into three categories
  - Values 0 to 59 (0x3B) are used for signal carrying frames
  - 60 (0x3C) and 61 (0x3D) are used to carry diagnostic and configuration data
  - 62 (0x3E) and 63 (0x3F) are reserved for future protocol enhancements
- Parity: Frame identifier bits are used to calculate the parity

Figure 14-19 shows the PID field structure.

Figure 14-19. PID Field

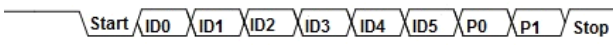

Data. In LIN, every frame can carry a minimum of one byte and maximum of 8 bytes of data. Here, the LSB of the data byte is sent first and the MSB of the data byte is sent last.

Checksum

The checksum is the last byte field in the LIN frame. It is calculated by inverting the 8-bit sum along with carryover of all data bytes only or the 8-bit sum with the carryover of all data bytes and the PID field. The two types of checksums in LIN frames are:

- Classic checksum: the checksum calculated over all the data bytes only (used in LIN 1.x slaves).
- Enhanced checksum: the checksum calculated over all the data bytes along with the protected identifier (used in LIN 2.x slaves).

LIN Frame Types

The type of frame refers to the conditions that need to be valid to transmit the frame. According to the LIN specification, there are five different types of LIN frames. A node or cluster does not have to support all frame types.

Unconditional Frame

These frames carry the signals and their frame identifiers (of 0x00 to 0x3B range). The subscriber will receive the frames and make it available to the application; the publisher of the frame will provide the response to the header.

Event-Triggered Frame

The purpose of an event-triggered frame is to increase the responsiveness of the LIN cluster without assigning too much of the bus bandwidth to polling of multiple slave nodes with seldom occurring events. Event-triggered frames carry the response of one or more unconditional frames. The unconditional frames associated with an event triggered frame should:

- Have equal length
- Use the same checksum model (either classic or enhanced)
- Reserve the first data field to its protected identifier
- Be published by different slave nodes
- Not be included directly in the same schedule table as the event-triggered frame

Sporadic Frame

The purpose of the sporadic frames is to merge some dynamic behavior into the schedule table without affecting the rest of the schedule table. These frames have a group of unconditional frames that share the frame slot. When the sporadic frame is due for transmission, the unconditional frames are checked if they have any updated signals. If no signals are updated, no frame will be transmitted and the frame slot will be empty.

Diagnostic Frames

Diagnostic frames always carry transport layer, and contains eight data bytes.

The frame identifier for diagnostic frame is:

- Master request frame (0x3C), or
- Slave response frame (0x3D)

Before transmitting a master request frame, the master task queries its diagnostic module to see if it will be transmitted or if the bus will be silent. A slave response frame header will be sent unconditionally. The slave tasks publish and subscribe to the response according to their diagnostic modules.

Reserved Frames

These frames are reserved for future use; their frame identifiers are 0x3E and 0x3F.

LIN Go-To-Sleep and Wake-Up

The LIN protocol has the feature of keeping the LIN bus in Sleep mode, if the master sends the go-to-sleep command. The go-to-sleep command is a master request frame (ID = 0x3C) with the first byte field is equal to 0x00 and rest set to 0xFF. The slave node application may still be active after the go-to-sleep command is received. This behavior is application specific. The LIN slave nodes automatically enter Sleep mode if the LIN bus inactivity is more than four seconds.

Wake-up can be initiated by any node connected to the LIN bus – either LIN master or any of the LIN slaves by forcing the bus to be dominant for 250 µs to 5 ms. Each slave should detect the wakeup request and be ready to process headers within 100 ms. The master should also detect the wakeup request and start sending headers when the slave nodes are active.

To support LIN, a dedicated (off-chip) line driver/receiver is required. Supply voltage range on the LIN bus is 7 V to 18 V. Typically, LIN line drivers will drive the LIN line with the value provided on the SCB TX line and present the value on the LIN line to the SCB RX line. By comparing TX and RX lines in the SCB, bus collisions can be detected (indicated by the SCB_UART_ARB_LOST field of the SCB_INTR_TX register).

Configuring the SCB as Standard UART Interface

To configure the SCB as a standard UART interface, set various register bits in the following order:

1. Configure the SCB as UART interface by writing '10' to the MODE field (bits [25:24]) of the SCB_CTRL register.
2. Configure the UART interface to operate as a Standard protocol by writing '00' to the MODE field (bits [25:24]) of the SCB_UART_CTRL register.
3. To enable the UART MP Mode or UART LIN Mode, write '1' to the MP_MODE (bit 10) or LIN_MODE (bit 12) respectively of the SCB_UART_RX_CTRL register.
4. Follow steps 2 to 5 described in “Enabling and Initializing UART” on page 102.

Note that PSoC Creator does all this automatically with the help of GUIs. For more information on these registers, see the PSoC 4000S Family: PSoC 4 Registers TRM.

14.3.3.2 SmartCard (ISO7816)

ISO7816 is asynchronous serial interface, defined with single-master-single slave topology. ISO7816 defines both Reader (master) and Card (slave) functionality. For more information, refer to the ISO7816 Specification. Only master (reader) function is supported by the SCB. This block provides the basic physical layer support with asynchronous character transmission. UART_TX line is connected to SmartCard I/O line, by internally multiplexing between UART_TX and UART_RX control modules.

The SmartCard transfer is similar to a UART transfer, with the addition of a negative acknowledgement (NACK) that may be sent from the receiver to the transmitter. A NACK is always '0'. Both master and slave may drive the same line, although never at the same time.

A SmartCard transfer has the transmitter drive the start bit and data bits (and optionally a parity bit). After these bits, it enters its stop period by releasing the bus. Releasing results in the line being '1' (the value of a stop bit). After one bit transfer period into the stop period, the receiver may drive a NACK on the line (a value of '0') for one bit transfer period. This NACK is observed by the transmitter, which reacts by extending its stop period by one bit transfer period. For this protocol to work, the stop period should be longer than one bit transfer period. Note that a data transfer with a NACK takes one bit transfer period longer, than a data transfer without a NACK. Typically, implementations use a tristate driver with a pull-up resistor, such that when the line is not transmitting data or transmitting the Stop bit, its value is '1'.

Figure 14-20 illustrates the SmartCard protocol.

Figure 14-20. SmartCard Example

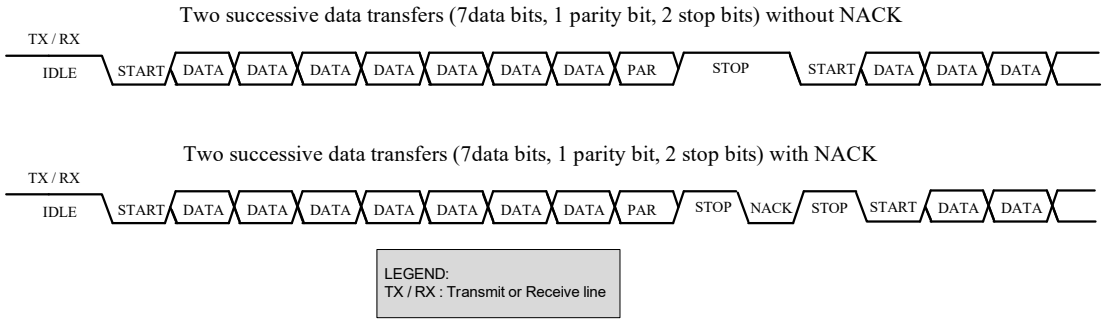

The communication Baud rate for ISO7816 is given as:

Baud rate= f_{7816} × (D/F)

Where f_{7816} is the clock frequency, F is the clock rate conversion integer, and D is the baud rate adjustment integer.

By default, F = 372, D = f1, and the maximum clock frequency is 5 MHz. Thus, maximum baud rate is 13.4 Kbps. Typically, a 3.57-MHz clock is selected. The typical value of the baud rate is 9.6 Kbps.

Configuring SCB as UART SmartCard Interface

To configure the SCB as a UART SmartCard interface, set various register bits in the following order; note that PSoC Creator does all this automatically with the help of GUIs. For more information on these registers, see the PSoC 4000S Family: PSoC 4 Registers TRM.

1. Configure the SCB as UART interface by writing '10' to the MODE (bits [25:24]) of the SCB_CTRL register.
2. Configure the UART interface to operate as a SmartCard protocol by writing '01' to the MODE (bits [25:24]) of the SCB_UART_CTRL register.
3. Follow steps 2 to 5 described in “Enabling and Initializing UART” on page 102.

14.3.3.3 IrDA

The SCB supports the Infrared Data Association (IrDA) protocol for data rates of up to 115.2 Kbps using the UART interface. It supports only the basic physical layer of IrDA protocol with rates less than 115.2 Kbps. Hence, the system instantiating this block must consider how to implement a complete IrDA communication system with other available system resources.

The IrDA protocol adds a modulation scheme to the UART signaling. At the transmitter, bits are modulated. At the receiver, bits are demodulated. The modulation scheme uses a Return-to-Zero-Inverted (RZI) format. A bit value of '0' is signaled by a short '1' pulse on the line and a bit value of '1' is signaled by holding the line to '0'. For these data rates (<=115.2 Kbps), the RZI modulation scheme is used and the pulse duration is 3/16 of the bit period. The sampling clock frequency should be set 16 times the selected baud rate, by configuring the SCB_OVS field of the SCB_CTRL register.

Different communication speeds under 115.2 Kbps can be achieved by configuring corresponding block clock frequency. Additional allowable rates are 2.4 Kbps, 9.6 Kbps, 19.2 Kbps, 38.4 Kbps, and 57.6 Kbps. An IrDA serial infrared interface operates at 9.6 Kbps. Figure 14-21 shows how a UART transfer is IrDA modulated.

Figure 14-21. IrDA Example

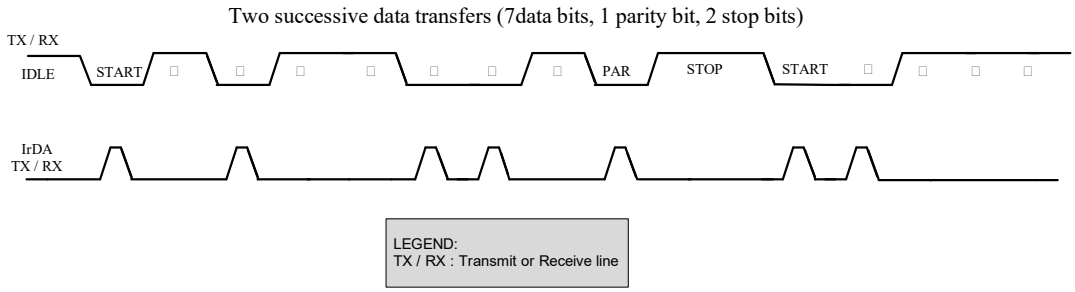

Configuring the SCB as UART IrDA Interface

To configure the SCB as a UART IrDA interface, set various register bits in the following order; note that PSoC Creator does all this automatically with the help of GUIs. For more information on these registers, see the PSoC 4000S Family: PSoC 4 Registers TRM.

1. Configure the SCB as UART interface by writing '10' to the MODE (bits [25:24]) of the SCB_CTRL register.
2. Configure the UART interface to operate as IrDA protocol by writing '10' to the MODE (bits [25:24]) of the SCB_UART_CTRL register.
3. Enable the Median filter on the input interface line by writing ‘1’ to MEDIAN (bit 9) of the SCB_RX_CTRL register.
4. Configure the SCB as described in “Enabling and Initializing UART” on page 102.

14.3.4 UART Registers

The UART interface is controlled using a set of 32-bit registers listed in Table 14-9. For more information on these registers, see the PSoC 4000S Family: PSoC 4 Registers TRM.

Table 14-9. UART Registers

Register Name	Operation
SCB_CTRL	Enables the SCB; selects the type of serial interface (SPI, UART, I^2C)
SCB_UART_CTRL	Used to select the sub-modes of UART (standard UART, SmartCard, IrDA), also used for local loop back control.
SCB_UART_RX_STATUS	Used to specify the BR_COUNTER value that determines the bit period. This is used to set the accuracy of the SCB clock. This value provides more granularity than the OVS bit in SCB_CTRL register.
SCB_UART_TX_CTRL	Used to specify the number of stop bits, enable parity, select the type of parity, and enable retransmission on NACK.
SCB_UART_RX_CTRL	Performs same function as SCB_UART_TX_CTRL but is also used for enabling multi processor mode, LIN mode drop on parity error, and drop on frame error.
SCB_TX_CTRL	Used to specify the data frame width and to specify whether MSB or LSB is the first bit in transmission.
SCB_RX_CTRL	Performs the same function as that of the SCB_TX_CTRL register, but for the receiver. Also decides whether a median filter is to be used on the input interface lines.
SCB_UART_FLOW_CONTROL	Configures flow control for UART transmitter.

14.3.5 UART Interrupts

The UART supports both internal and external interrupt requests. The internal interrupt events are listed in this section. PSoC Creator generates the necessary interrupt service routines (ISRs) for handling buffer management interrupts. Custom ISRs can also be used by connecting the external interrupt component to the interrupt output of the UART component (with external interrupts enabled).

The UART predefined interrupts can be classified as TX interrupts and RX interrupts. The TX interrupt output is the logical OR of the group of all possible TX interrupt sources. This signal goes high when any of the enabled TX interrupt sources is true. The RX interrupt output is the logical OR of the group of all possible RX interrupt sources. This signal goes high when any of the enabled Rx interrupt sources is true. The UART provides interrupts on the following events:

- TX
  - TX FIFO has less entries than the value specified by TRIGGER_LEVEL in SCB_TX_FIFO_CTRL
  - TX FIFO is not full
  - TX FIFO is empty
  - TX FIFO overflow
  - TX FIFO underflow
  - TX received a NACK in SmartCard mode
  - TX done
  - Arbitration lost (in LIN or SmartCard modes)
- RX
  - RX FIFO has less entries than the value specified by TRIGGER_LEVEL in SCB_RX_FIFO_CTRL
  - RX FIFO is full
  - RX FIFO is not empty
  - RX FIFO overflow
  - RX FIFO underflow
  - Frame error in received data frame
  - Parity error in received data frame
  - LIN baud rate detection is completed
  - LIN break detection is successful

14.3.6 Enabling and Initializing UART

The UART must be programmed in the following order:

1. Program protocol specific information using the SCB_UART_CTRL register, according to Table 14-10. This includes selecting the submodes of the protocol, transmitter-receiver functionality, and so on.
2. Program the generic transmitter and receiver information using the SCB_TX_CTRL and SCB_RX_CTRL registers, as shown in Table 14-11.
   a. Specify the data frame width.
   b. Specify whether MSB or LSB is the first bit to be transmitted or received.
3. Program the transmitter and receiver FIFOs using the SCB_TX_FIFO_CTRL and SCB_RX_FIFO_CTRL registers respectively, as shown in Table 14-12.
   a. Set the trigger level.
   b. Clear the transmitter and receiver FIFO and Shift registers.
   c. Freeze the TX and RX FIFOs.
4. Program the SCB_CTRL register to enable the SCB block. Also select the mode of operation (Table 14-13).
5. Enable the block (write a '1' to the ENABLED bit of the SCB_CTRL register). After the block is enabled, control bits should not be changed. Changes should be made after disabling the block; for example, to modify the operation mode (from SmartCard to IrDA). The change takes effect only after the block is re-enabled. Note that re-enabling the block causes re-initialization and the associated state is lost (for example FIFO content).

Table 14-10. SCB_UART_CTRL Register

Bits	Name	Value	Description
[25:24]	MODE	00	Standard UART
		01	SmartCard
		10	IrDA
		11	Reserved
16	LOOP_BACK	Loop back control. This allows a SCB UART transmitter to communicate with its receiver counterpart.	

Table 14-11. SCB_TX_CTRL/SCB_RX_CTRL Registers

Bits	Name	Description
[3:0]	DATA_ WIDTH	'DATA_WIDTH + 1' is the no. of bits in the transmitted or received data frame. The valid range is [3, 15]. This does not include start, stop, and parity bits.
8	MSB_FIRST	1 = MSB first 0 = LSB first
9	MEDIAN	This is for SCB_RX_CTRL only. Decides whether a digital three-tap median filter is applied on the input interface lines. This filter should reduce susceptibility to errors, but it requires higher oversampling values. For the UART IrDA mode, this should always be '1'. 1 = Enabled 0 = Disabled

Table 14-12. SCB_TX_FIFO_CTRL/SCB_RX_FIFO_CTRL Registers

Bits	Name	Description
[7:0]	TRIGGER_LEVEL	Trigger level. When the transmitter FIFO has less entries or receiver FIFO has more entries than the value of this field, a transmitter or receiver trigger event is generated in the respective case.
16	CLEAR	When '1', the transmitter or receiver FIFO and the shift registers are cleared/invalidated.
17	FREEZE	When '1', hardware reads/writes to the transmitter or receiver FIFO have no effect. Freeze will not advance the TX or RX FIFO read/write pointer.

Table 14-13. SCB_CTRL Register

Bits	Name	Value	Description
[25:24]	MODE	00	I²C mode
		01	SPI mode
		10	UART mode
		11	Reserved
31	ENABLED	0	SCB block disabled
		1	SCB block enabled

14.4 Inter Integrated Circuit (I²C)

This section explains the I²C implementation in PSoC. For more information on the I²C protocol specification, refer to the I²C-bus specification available on the UM10204, I²C-bus specification and user manual.

14.4.1 Features

This block supports the following features:

- Master, slave, and master/slave mode
- Slow-mode (50 kbps), standard-mode (100 kbps), fast-mode (400 kbps), and fast-mode plus (1000 kbps) data-rates
- 7- or 10-bit slave addressing (10-bit addressing requires firmware support)
- Clock stretching and collision detection
- Programmable oversampling of I²C clock signal (SCL)
- Error reduction using an digital median filter on the input path of the I²C data signal (SDA)
- Glitch-free signal transmission with an analog glitch filter
- Interrupt or polling CPU interface

14.4.2 General Description

Figure 14-22 illustrates an example of an I²C communication network.

Figure 14-22. I²C Interface Block Diagram

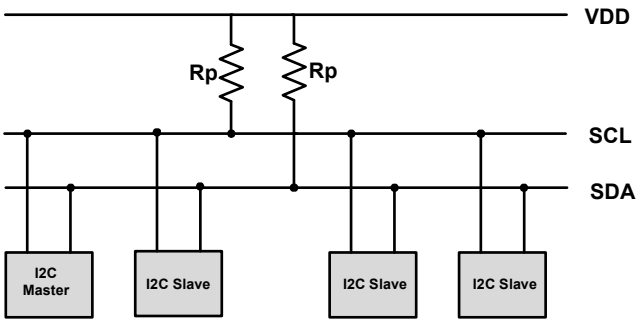

The standard I²C bus is a two wire interface with the following lines:

- Serial Data (SDA)
- Serial Clock (SCL)

I²C devices are connected to these lines using open collector or open-drain output stages, with pull-up resistors (Rp). A simple master/slave relationship exists between devices. Masters and slaves can operate as either transmitter or receiver. Each slave device connected to the bus is software addressable by a unique 7-bit address. PSoC also supports 10-bit address matching for I²C with firmware support.

14.4.3 Terms and Definitions

Table 14-14 explains the commonly used terms in an I²C communication network.

Table 14-14. Definition of I²C Bus Terminology

Term	Description
Transmitter	The device that sends data to the bus
Receiver	The device that receives data from the bus
Master	The device that initiates a transfer, generates clock signals, and terminates a transfer
Slave	The device addressed by a master
Multi-master	More than one master can attempt to control the bus at the same time without corrupting the message
Arbitration	Procedure to ensure that, if more than one master simultaneously tries to control the bus, only one is allowed to do so and the winning message is not corrupted
Synchronization	Procedure to synchronize the clock signals of two or more devices

14.4.3.1 Clock Stretching

When a slave device is not yet ready to process data, it may drive a ‘0’ on the SCL line to hold it down. Due to the implementation of the I/O signal interface, the SCL line value will be '0', independent of the values that any other master or slave may be driving on the SCL line. This is known as clock stretching and is the only situation in which a slave drives the SCL line. The master device monitors the SCL line and detects it when it cannot generate a positive clock pulse ('1') on the SCL line. It then reacts by delaying the generation of a positive edge on the SCL line, effectively synchronizing with the slave device that is stretching the clock.

14.4.3.2 Bus Arbitration

The I²C protocol is a multi-master, multi-slave interface. Bus arbitration is implemented on master devices by monitoring the SDA line. Bus collisions are detected when the master observes an SDA line value that is not the same as the value it is driving on the SDA line. For example, when master 1 is driving the value '1' on the SDA line and master 2 is driving the value '0' on the SDA line, the actual line value will be '0' due to the implementation of the I/O signal interface. Master 1 detects the inconsistency and loses control of the bus. Master 2 does not detect any inconsistency and keeps control of the bus.

14.4.4 I²C Modes of Operation

I²C is a synchronous single master, multi-master, multi-slave serial interface. Devices operate in either master mode, slave mode, or master/slave mode. In master/slave mode, the device switches from master to slave mode when it is addressed. Only a single master may be active during a data transfer. The active master is responsible for driving the clock on the SCL line. Table 14-15 illustrates the I²C modes of operation.

Table 14-15. I²C Modes

Mode	Description
Slave	Slave only operation (default)
Master	Master only operation
Multi-master	Supports more than one master on the bus
Multi-master-slave	Simultaneous slave and multi-master operation

Data transfer through the I²C bus follows a specific format. Table 14-16 lists some common bus events that are part of an I²C data transfer. The Write Transfer and Read Transfer sections explain the I²C bus bit format during data transfer.

Table 14-16. I²C Bus Events Terminology

Bus Event	Description
START	A HIGH to LOW transition on the SDA line while SCL is HIGH
STOP	A LOW to HIGH transition on the SDA line while SCL is HIGH
ACK	The receiver pulls the SDA line LOW and it remains LOW during the HIGH period of the clock pulse, after the transmitter transmits each byte. This indicates to the transmitter that the receiver received the byte properly.
NACK	The receiver does not pull the SDA line LOW and it remains HIGH during the HIGH period of clock pulse after the transmitter transmits each byte. This indicates to the transmitter that the receiver received the byte properly.
Repeated START	START condition generated by master at the end of a transfer instead of a STOP condition
DATA	SDA status change while SCL is low (data changing), and no change while SCL is high (data valid)

When operating in multi-master mode, the bus should always be checked to see if it is busy; another master may already be communicating with a slave. In this case, the master must wait until the current operation is complete before issuing a START signal (see Table 14-16, Figure 14-23, and Figure 14-24). The master looks for a STOP signal as an indicator that it can start its data transmission.

When operating in multi-master-slave mode, if the master loses arbitration during data transmission, the hardware reverts to slave mode and the received byte generates a slave address interrupt, so that the device is ready to respond to any other master on the bus. With all of these modes, there are two types of transfer - read and write. In write transfer, the master sends data to slave; in read transfer, the master receives data from slave. Write and read transfer examples are available in "Master Mode Transfer Examples" on page 113, "Slave Mode Transfer Examples" on page 115, and "Multi-Master Mode Transfer Example" on page 119.

14.4.4.1 Write Transfer

Figure 14-23. Master Write Data Transfer

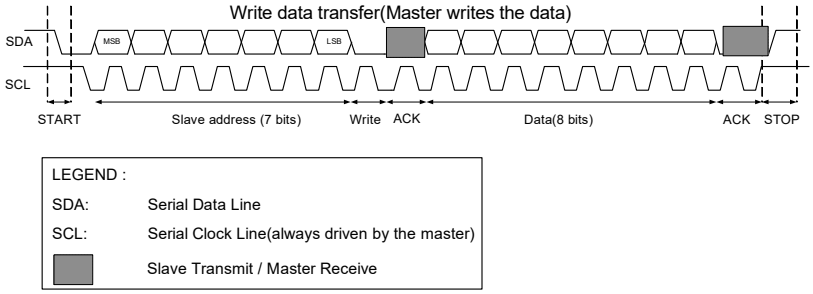

- A typical write transfer begins with the master generating a START condition on the I²C bus. The master then writes a 7-bit I²C slave address and a write indicator ('0') after the START condition. The addressed slave transmits an acknowledgement byte by pulling the data line low during the ninth bit time.
- If the slave address does not match any of the slave devices or if the addressed device does not want to acknowledge the request, it transmits a no acknowledgement (NACK) by not pulling the SDA line low. The absence of an acknowledgement, results in an SDA line value of '1' due to the pull-up resistor implementation.
- If no acknowledgement is transmitted by the slave, the master may end the write transfer with a STOP event. The master can also generate a repeated START condition for a retry attempt.
- The master may transmit data to the bus if it receives an acknowledgement. The addressed slave transmits an acknowledgement to confirm the receipt of every byte of data written. Upon receipt of this acknowledgement, the master may transmit another data byte.
- When the transfer is complete, the master generates a STOP condition.

14.4.4.2 Read Transfer

Figure 14-24. Master Read Data Transfer

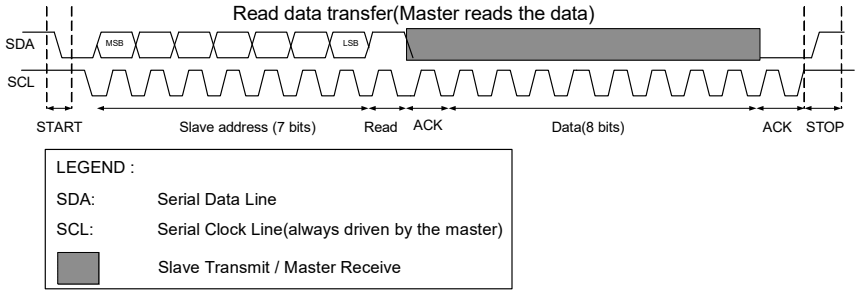

- A typical read transfer begins with the master generating a START condition on the I^2C bus. The master then writes a 7-bit I^2C slave address and a read indicator ('1') after the START condition. The addressed slave transmits an acknowledgement by pulling the data line low during the ninth bit time.
- If the slave address does not match with that of the connected slave device or if the addressed device does not want to acknowledge the request, a no acknowledgement (NACK) is transmitted by not pulling the SDA line low. The absence of an acknowledgement, results in an SDA line value of '1' due to the pull-up resistor implementation.
- If no acknowledgement is transmitted by the slave, the master may end the read transfer with a STOP event. The master can also generate a repeated START condition for a retry attempt.
- If the slave acknowledges the address, it starts transmitting data after the acknowledgement signal. The master transmits an acknowledgement to confirm the receipt of each data byte sent by the slave. Upon receipt of this acknowledgement, the addressed slave may transmit another data byte.
- The master can send a NACK signal to the slave to stop the slave from sending data bytes. This completes the read transfer.
- When the transfer is complete, the master generates a STOP condition.

14.4.5 Easy I2C (EZI2C) Protocol

The Easy I2C (EZI2C) protocol is a unique communication scheme built on top of the I^2C protocol by Cypress. It uses a software wrapper around the standard I^2C protocol to communicate to an I^2C slave using indexed memory transfers. This removes the need for CPU intervention at the level of individual frames.

The EZI2C protocol defines an 8-bit address that indexes a memory array (8-bit wide 32 locations) located on the slave device. Five lower bits of the EZ address are used to address these 32 locations. The number of bytes transferred to or from the EZI2C memory array can be found by comparing the EZ address at the START event and the EZ address at the STOP event.

Note The I^2C block has a hardware FIFO memory, which is 16 bits wide and 16 locations deep with byte write enable. The access methods for EZ and non-EZ functions are different. In non-EZ mode, the FIFO is split into TXFIFO and RXFIFO. Each has 16-bit wide eight locations. In EZ mode, the FIFO is used as a single memory unit with 8-bit wide 32 locations.

EZI2C has two types of transfers: a data write from the master to an addressed slave memory location, and a read by the master from an addressed slave memory location.

14.4.5.1 Memory Array Write

An EZ write to a memory array index is by means of an I^2C write transfer. The first transmitted write data is used to send an EZ address from the master to the slave. The five lowest significant bits of the write data are used as the “new” EZ address at the slave. Any additional write data elements in the write transfer are bytes that are written to the memory array. The EZ address is automatically incremented by the slave as bytes are written into the memory array. If the number of continuous data bytes written to the EZI2C buffer exceeds EZI2C buffer boundary, it overwrites the last location for every subsequent byte.

14.4.5.2 Memory Array Read

An EZ read from a memory array index is by means of an I2C read transfer. The EZ read relies on an earlier EZ write to have set the EZ address at the slave. The first received read data is the byte from the memory array at the EZ address memory location. The EZ address is automatically incremented as bytes are read from the memory array. The address wraps around to zero when the final memory location is reached.

Figure 14-25. EZI2C Write and Read Data Transfer

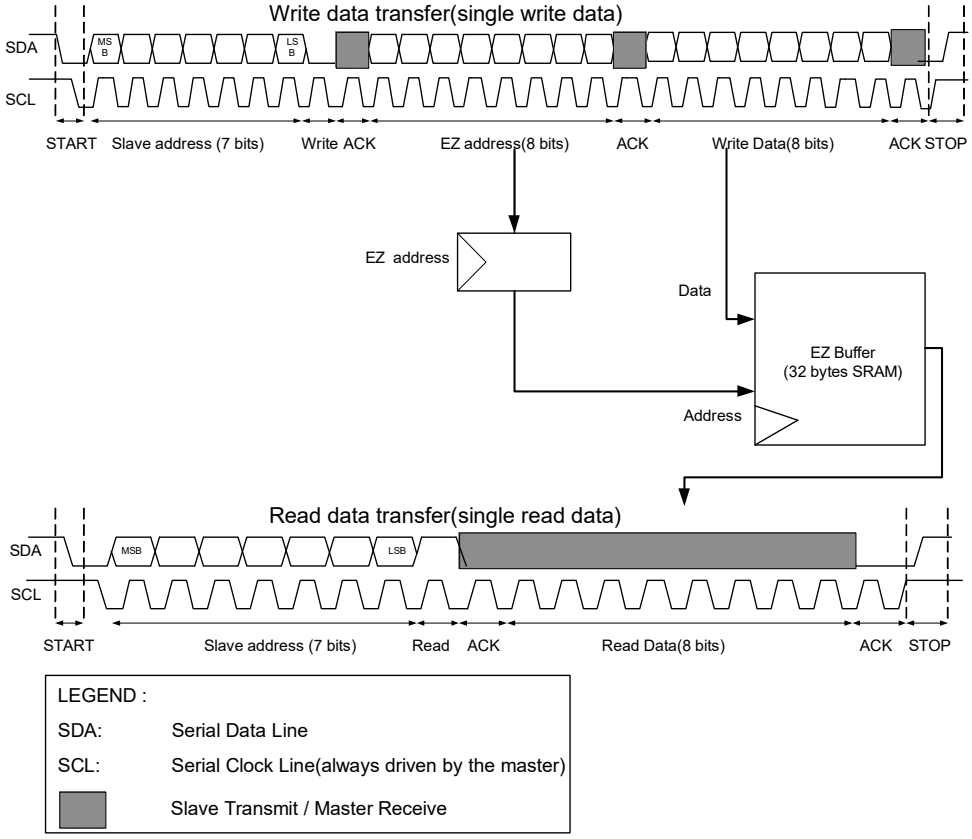

14.4.6 I2C Registers

The I2C interface is controlled by reading and writing a set of configuration, control, and status registers, as listed in Table 14-17.

Table 14-17. I2C Registers

Register	Function
SCB_CTRL	Enables the I2C block and selects the type of serial interface (SPI, UART,I2C). Also used to select internally and externally clocked operation and EZ and non-EZ modes of operation.
SCB_I2C_CTRL	Selects the mode (master, slave) and sends an ACK or NACK signal based on receiver FIFO status.
SCB_I2C_STATUS	Indicates bus busy status detection, read/write transfer status of the slave/master, and stores the EZ slave address.
SCB_I2C_M_CMD	Enables the master to generate START, STOP, and ACK/NACK signals.
SCB_I2C_S_CMD	Enables the slave to generate ACK/NACK signals.
SCB_STATUS	Indicates whether the externally clocked logic is using the EZ memory. This bit can be used by software to determine whether it is safe to issue a software access to the EZ memory.
SCB_I2C_CFG	Configures filters, which remove glitches from the SDA and SCL lines.
SCB_TX_CTRL	Specifies the data frame width; also used to specify whether MSB or LSB is the first bit in transmission.

Table 14-17. I2C Registers *(continued)*

Register	Function
SCB_TX_FIFO_CTRL	Specifies the trigger level, clearing of the transmitter FIFO and shift registers, and FREEZE operation of the transmitter FIFO.
SCB_TX_FIFO_STATUS	Indicates the number of bytes stored in the transmitter FIFO, the location from which a data frame is read by the hardware (read pointer), the location from which a new data frame is written (write pointer), and decides if the transmitter FIFO holds the valid data.
SCB_TX_FIFO_WR	Holds the data frame written into the transmitter FIFO. Behavior is similar to that of a PUSH operation.
SCB_RX_CTRL	Performs the same function as that of the SCB_TX_CTRL register, but for the receiver. Also decides whether a median filter is to be used on the input interface lines.
SCB_RX_FIFO_CTRL	Performs the same function as that of the SCB_TX_FIFO_CTRL register, but for the receiver.
SCB_RX_FIFO_STATUS	Performs the same function as that of the SCB_TX_FIFO_STATUS register, but for the receiver.
SCB_RX_FIFO_RD	Holds the data read from the receiver FIFO. Reading a data frame removes the data frame from the FIFO; behavior is similar to that of a POP operation. This register has a side effect when read by software: a data frame is removed from the FIFO.
SCB_RX_FIFO_RD_SILENT	Holds the data read from the receiver FIFO. Reading a data frame does not remove the data frame from the FIFO; behavior is similar to that of a PEEK operation.
SCB_RX_MATCH	Stores slave device address and is also used as slave device address MASK.
SCB_EZ_DATA	Holds the data in an EZ memory location.

Note Detailed descriptions of the I^2C register bits are available in the PSoC 4000S Family: PSoC 4 Registers TRM.

14.4.7 I2C Interrupts

The fixed-function I^2C block generates interrupts for the following conditions.

- I2C Master
  - I2C master lost arbitration
  - I2C master received NACK
  - I2C master received ACK
  - I2C master sent STOP
  - I2C bus error (unexpected stop/start condition detected)
- I2C Slave
  - I2C slave lost arbitration
  - I2C slave received NACK
  - I2C slave received ACK
  - I2C slave received STOP
  - I2C slave received START
  - I2C slave address matched
  - I2C bus error (unexpected stop/start condition detected)
- TX
  - TX FIFO has less entries than the value specified by TRIGGER_LEVEL in SCB_TX_FIFO_CTRL
  - TX FIFO is not full
  - TX FIFO is empty
  - TX FIFO overflow
  - TX FIFO underflow
- RX
  - RX FIFO has less entries than the value specified by TRIGGER_LEVEL in SCB_RX_FIFO_CTRL
  - RX FIFO is full

- RX FIFO is not empty
- RX FIFO overflow
- RX FIFO underflow

- I2C Externally Clocked
  - Wake up request on address match
  - I2C STOP detection at the end of each transfer
  - I2C STOP detection at the end of a write transfer
  - I2C STOP detection at the end of a read transfer

The I2C interrupt signal is hard-wired to the Cortex-M0 NVIC and cannot be routed to external pins.

The interrupt output is the logical OR of the group of all possible interrupt sources. The interrupt is triggered when any of the enabled interrupt conditions are met. Interrupt status registers are used to determine the actual source of the interrupt. For more information on interrupt registers, see the PSoC 4000S Family: PSoC 4 Registers TRM.

14.4.8 Enabling and Initializing the I2C

The following section describes the method to configure the I2C block for standard (non-EZ) mode and EZI2C mode.

14.4.8.1 I2C Standard (Non-EZ) Mode Configuration

The I2C interface must be programmed in the following order.

1. Program protocol specific information using the SCB_I2C_CTRL register according to Table 14-18. This includes selecting master - slave functionality.
2. Program the generic transmitter and receiver information using the SCB_TX_CTRL and SCB_RX_CTRL registers, as shown in Table 14-19.
   a. Specify the data frame width.
   b. Specify that MSB is the first bit to be transmitted/received.
3. Program transmitter and receiver FIFO using the SCB_TX_FIFO_CTRL and SCB_RX_FIFO_CTRL registers, respectively, as shown in Table 14-20.
   a. Set the trigger level.
   b. Clear the transmitter and receiver FIFO and Shift registers.
4. Program the SCB_CTRL register to enable the I2C block and select the I2C mode. These register bits are shown in Table 14-21. For a complete description of the I2C registers, see the PSoC 4000S Family: PSoC 4 Registers TRM.

Table 14-18. SCB_I2C_CTRL Register

Bits	Name	Value	Description
30	SLAVE_MODE	1	Slave mode
31	MASTER_MODE	1	Master mode

Table 14-19. SCB_TX_CTRL/SCB_RX_CTRL Register

Bits	Name	Description
[3:0]	DATA_ WIDTH	'DATA_WIDTH + 1' is the number of bits in the transmitted or received data frame. For I2C, this is always 7.
8	MSB_FIRST	1= MSB first (this should always be true for I2C)
		0= LSB first
9	MEDIAN	This is for SCB_RX_CTRL only. Decides whether a digital three-tap median filter is applied on the input interface lines. This filter should reduce susceptibility to errors, but it requires higher over-sampling values. 1=Enabled 0=Disabled

Table 14-20. SCB_TX_FIFO_CTRL/SCB_RX_FIFO_CTRL

Bits	Name	Description
[7:0]	TRIGGER_LEVEL	Trigger level. When the transmitter FIFO has less entries or the receiver FIFO has more entries than the value of this field, a transmitter or receiver trigger event is generated in the respective case.
16	CLEAR	When '1', the transmitter or receiver FIFO and the shift registers are cleared.
17	FREEZE	When '1', hardware reads/writes to the transmitter or receiver FIFO have no effect. Freeze does not advance the TX or RX FIFO read/write pointer.

Table 14-21. SCB_CTRL Registers

Bits	Name	Value	Description
[25:24]	MODE	00	I2C mode
		01	SPI mode
		10	UART mode
		11	Reserved
31	ENABLED	0	SCB block disabled
		1	SCB block enabled

14.4.8.2 EZI2C Mode Configuration

To configure the I2C block for EZI2C mode, set the following I2C register bits

1. Select the EZI2C mode by writing '1' to the EZ_MODE bit (bit 10) of the SCB_CTRL register.
2. Follow steps 2 to 4 mentioned in I2C Standard (Non-EZ) Mode Configuration.
3. Set the S_READY_ADDR_ACK (bit 12) and S_READY_DATA_ACK (bit 13) bits of the SCB_I2C_CTRL register.

14.4.9 Internal and External Clock Operation in I2C

The I2C block supports both internally and externally clocked operation for data-rate generation. Internally clocked operations use a clock signal derived from the PSoC system bus clock. Externally clocked operations use a clock provided by the user. Externally clocked operation allows limited functionality in the Deep-Sleep power mode, in which on-chip clocks are not active. For more information on system clocking, see the Clocking System chapter on page 56.

Externally clocked operation is limited to the following cases:

- Slave functionality.
- EZ functionality.

TX and RX FIFOs do not support externally clocked operation; therefore, it is not used for non-EZ functionality.

Internally and externally clocked operations are determined by two register fields of the SCB_CTRL register:

- **EC_AM_MODE (Externally Clocked Address Matching Mode)**: Indicates whether I2C address matching is internally ('0') or externally ('1') clocked.
- **EC_OP_MODE (Externally Clocked Operation Mode)**: Indicates whether the rest of the protocol operation (besides I2C address match) is internally ('0') or externally ('1') clocked. As mentioned earlier, externally clocked operation does not support non-EZ functionality.

These two register fields determine the functional behavior of I2C. The register fields should be set based on the required behavior in Active, Sleep, and Deep-Sleep system power modes. Improper setting may result in faulty behavior in certain power modes. Table 14-22 and Table 14-23 describe the settings for I2C in EZ and non-EZ mode.

14.4.9.1 I2C Non-EZ Mode of Operation

Externally clocked operation is not supported for non-EZ functionality because there is no FIFO support for this mode. So, the EC_OP_MODE should always be set to '0'for non-EZ mode. However, EC_AM_MODE can be set to '0' or '1'.Table 14-22 gives an overview of the possibilities. The combination EC_AM_MODE = 0 and EC_OP_MODE = 1 is invalid and the block will not respond.

EC_AM_MODE is '0' and EC_OP_MODE is '0'.

This setting only works in Active and Sleep system power modes. All the functionality of the I2C is provided in the internally clocked domain.

EC_AM_MODE is '1' and EC_OP_MODE is '0'.

This setting works in Active, Sleep, and Deep-Sleep system power modes. I2C address matching is performed by the externally clocked logic in Active, Sleep, and Deep-Sleep system power modes. When the externally clocked logic matches the address, it sets a wakeup interrupt cause bit, which can be used to generate an interrupt to wakeup the CPU.

Table 14-22. I2C Operation in Non-EZ Mode

I2C (Non-EZ) Mode				
System Power Mode	EC_OP_MODE = 0		EC_OP_MODE = 1	
	EC_AM_MODE = 0	EC_AM_MODE = 1	EC_AM_MODE = 0	EC_AM_MODE = 1
Active and Sleep	Address match using internal clock. Operation using internal clock.	Address match using external clock. Operation using internal clock.	Not supported	
Deep-Sleep	Not supported	Address match using external clock. Operation using internal clock.		

- In Active system power mode, the CPU is active and the wakeup interrupt cause is disabled (associated MASK bit is '0'). The externally clocked logic takes care of the address matching and the internally locked logic takes care of the rest of the I2C transfer.
- In the Sleep mode, wakeup interrupt cause can be either enabled or disabled based on the application. The remaining operations are similar to the Active mode.
- In the Deep-Sleep mode, the CPU is shut down and will wake up on I2C activity if the wakeup interrupt cause is enabled. CPU wakeup up takes time and the ongoing I2C transfer is either negatively acknowledged (NACK) or the clock is stretched. In the case of a NACK, the internally clocked logic takes care of the first I2C transfer after it wakes up. For clock stretching, the internally clocked logic takes care of the ongoing/stretched transfer when it wakes up. The register bit S_NOT_READY_ADDR_NACK (bit 14) of the SCB_I2C_CTRL register determines whether the externally clocked logic performs a negative acknowledge ('1') or clock stretch ('0').

14.4.9.2 I2C EZ Operation Mode

EZ mode has three possible settings. EC_AM_MODE can be set to '0' or '1' when EC_OP_MODE is '0' and EC_AM_MODE must be set to '1' when EC_OP_MODE is '1'. Table 14-23 gives an overview of the possibilities. The grey cells indicate a possible, yet not recommended setting because it involves a switch from the externally clocked logic (slave selection) to the internally clocked logic (rest of the operation). The combination EC_AM_MODE = 0 and EC_OP_MODE = 1 is invalid and the block will not respond.

Table 14-23. I2C Operation in EZ Mode

I2C, EZ Mode				
System Power Mode	EC_OP_MODE= 0		EC_OP_MODE = 1	
	EC_AM_MODE = 0	EC_AM_MODE = 1	EC_AM_MODE = 0	EC_AM_MODE = 1
Active and Sleep	Address match using internal clock Operation using internal clock	Address match using external clock Operation using internal clock	Invalid	Address match using external clock Operation using external clock
Deep-Sleep	Not supported	Address match using external clock Operation using internal clock		Address match using external clock Operation using external clock

- **EC_AM_MODE is '0' and EC_OP_MODE is '0'**. This setting only works in Active and Sleep system power modes.
- **EC_AM_MODE is '1' and EC_OP_MODE is '0'**. This setting works same as I2C non-EZ mode.
- **EC_AM_MODE is '1' and EC_OP_MODE is '1'**. This setting works in Active and Deep-Sleep system power modes.

The I2C block's functionality is provided in the externally clocked domain. Note that this setting results in externally clocked accesses to the block's SRAM. These accesses may conflict with internally clocked accesses from the device. This may cause wait states or bus errors. The field FIFO_BLOCK (bit 17) of the SCB_CTRL register determines whether wait states ('1') or bus errors ('0') are generated.

14.4.10 Wake up from Sleep

The system wakes up from Sleep or Deep-Sleep system power modes when an I2C address match occurs. The fixed-function I2C block performs either of two actions after address match: Address ACK or Address NACK.

Address ACK - The I2C slave executes clock stretching and waits until the device wakes up and ACKs the address.

Address NACK - The I2C slave NACKs the address immediately. The master must poll the slave again after the device wakeup time is passed. This option is only valid in the slave or multi-master-slave modes.

Note The interrupt bit WAKE_UP (bit 0) of the SCB_INTR_I2C_EC register must be enabled for the I2C to wake up the device on slave address match while switching to the Sleep mode.

Note If the device is configured in I2C slave mode, the clock to the SCB should be disabled when entering Deep-Sleep power mode; enable the clock when waking up from Deep-Sleep mode.

14.4.11 Master Mode Transfer Examples

Master mode transmits or receives data.

14.4.11.1 Master Transmit

Figure 14-26. Single Master Mode Write Operation Flow Chart

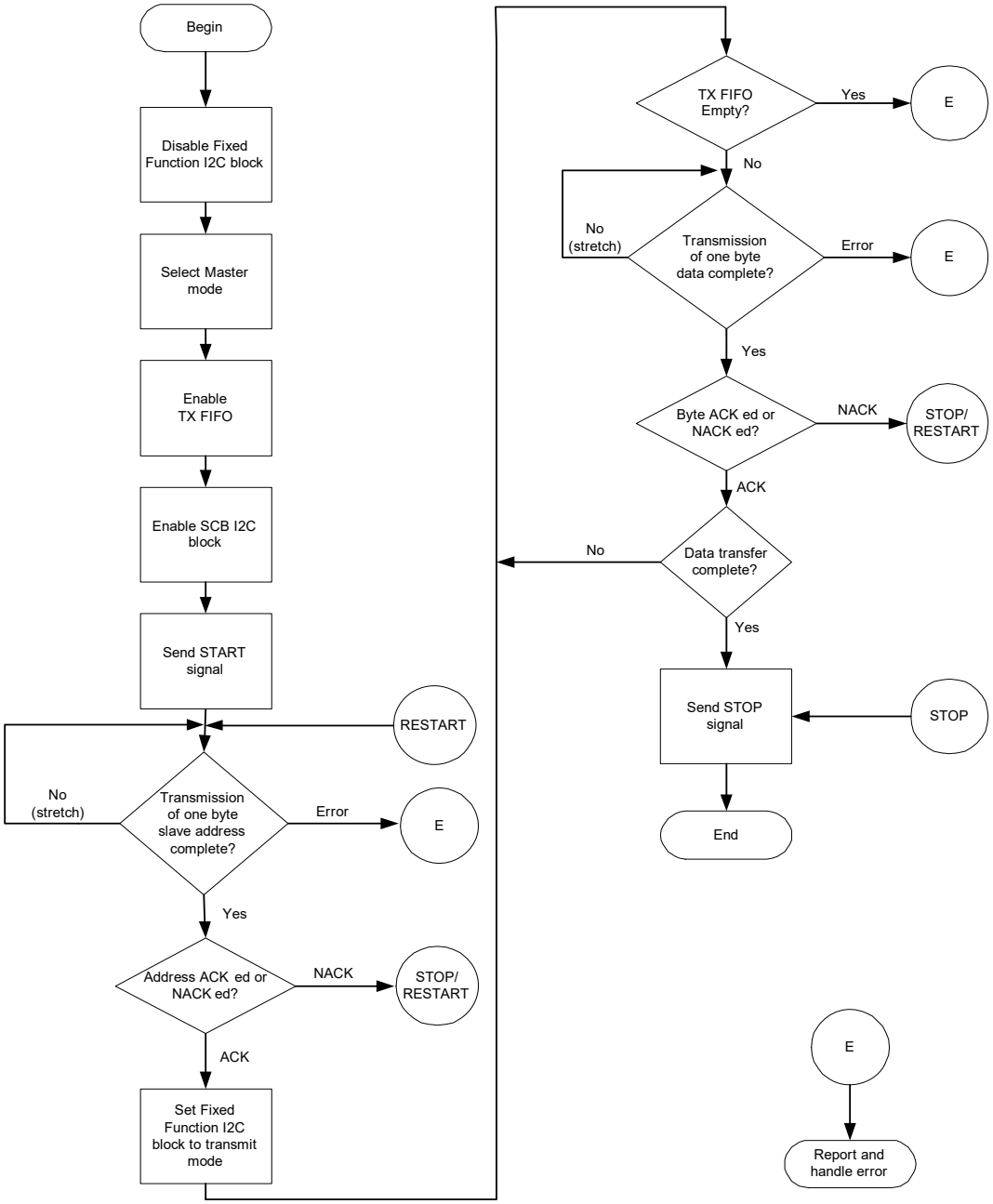

14.4.11.2 Master Receive

Figure 14-27. Single Master Mode Read Operation Flow Chart

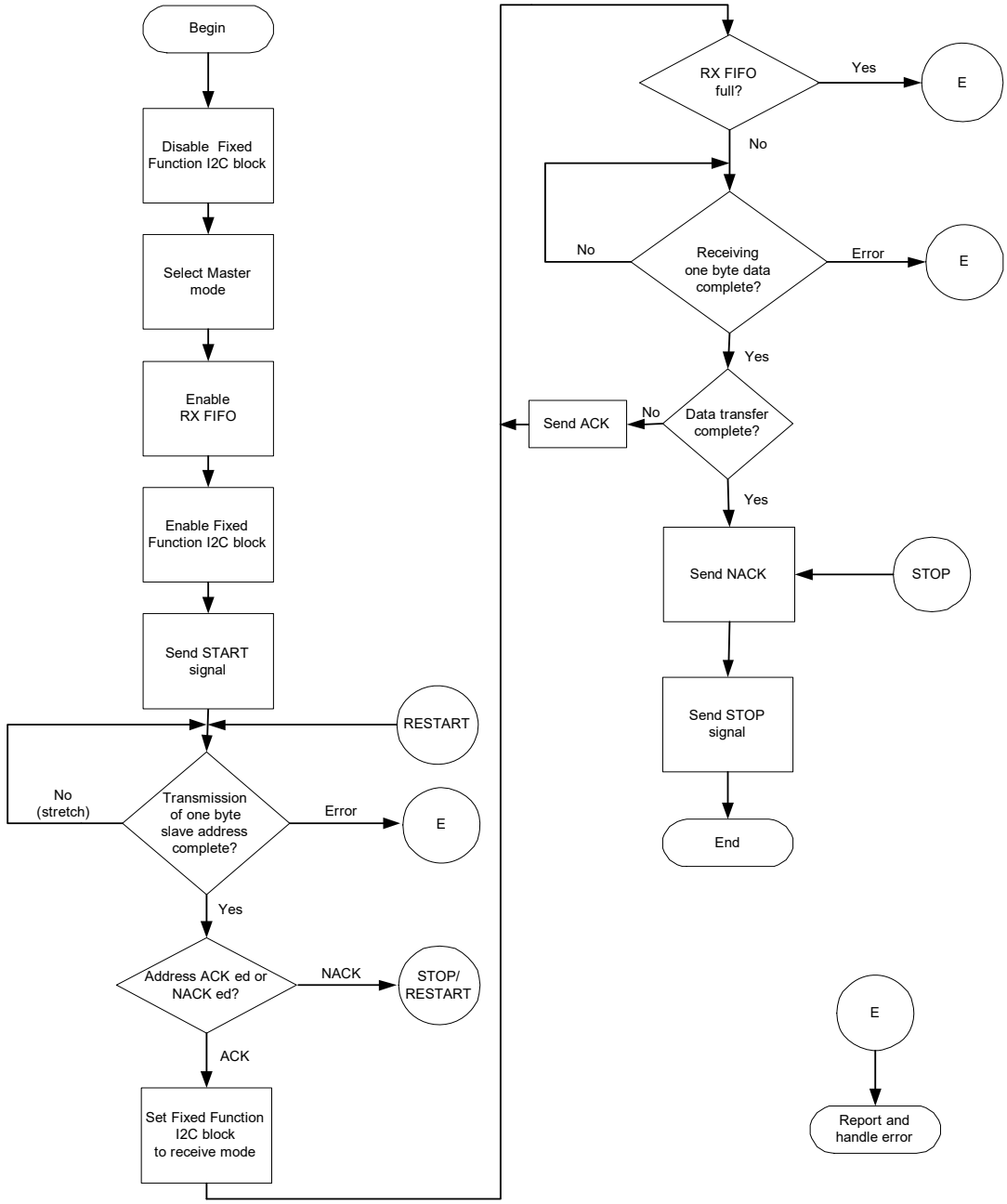

14.4.12 Slave Mode Transfer Examples

Slave mode transmits or receives data.

14.4.12.1 Slave Transmit

Figure 14-28. Slave Mode Write Operation Flow Chart

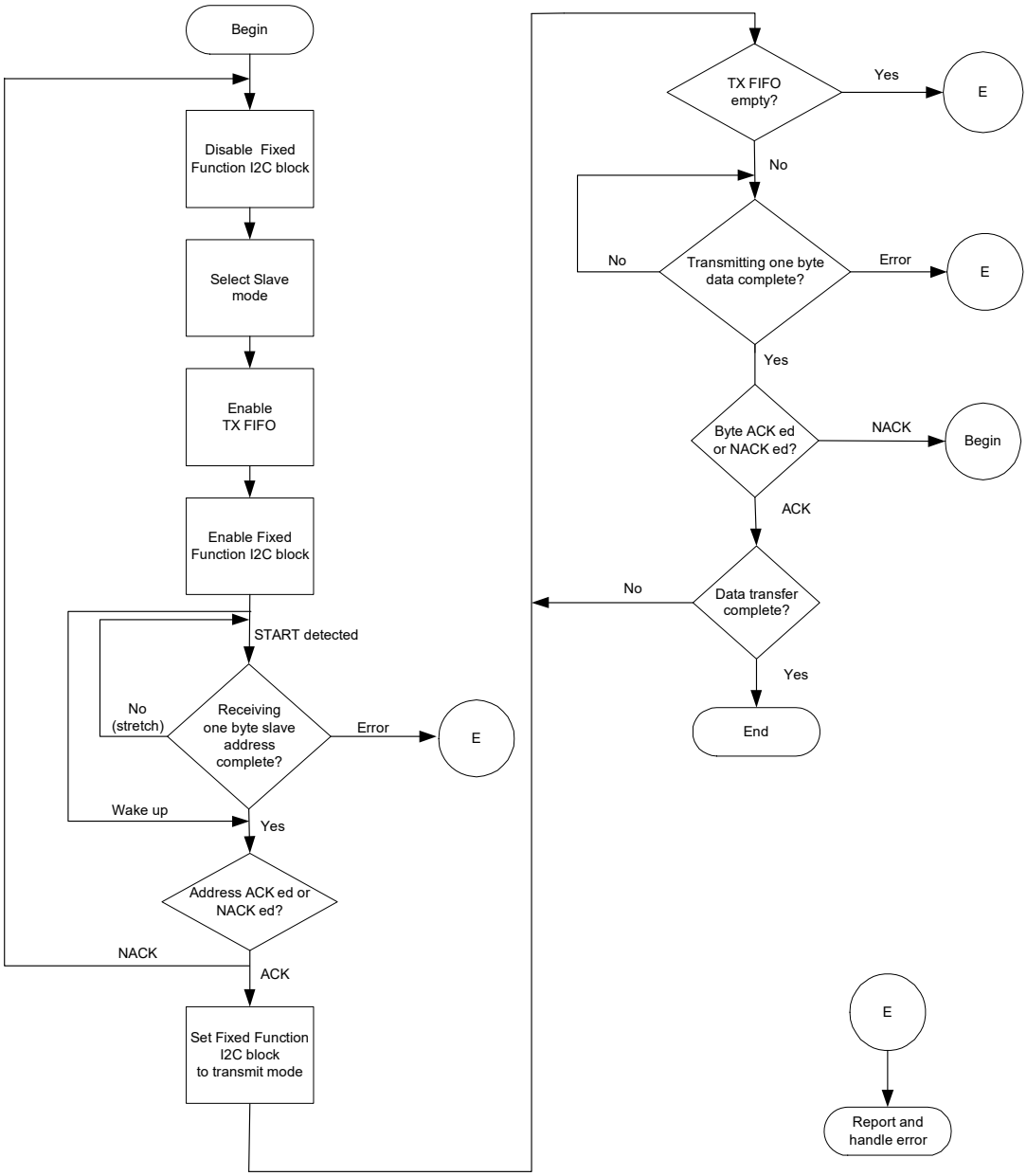

14.4.12.2 Slave Receive

Figure 14-29. Slave Mode Read Operation Flow Chart

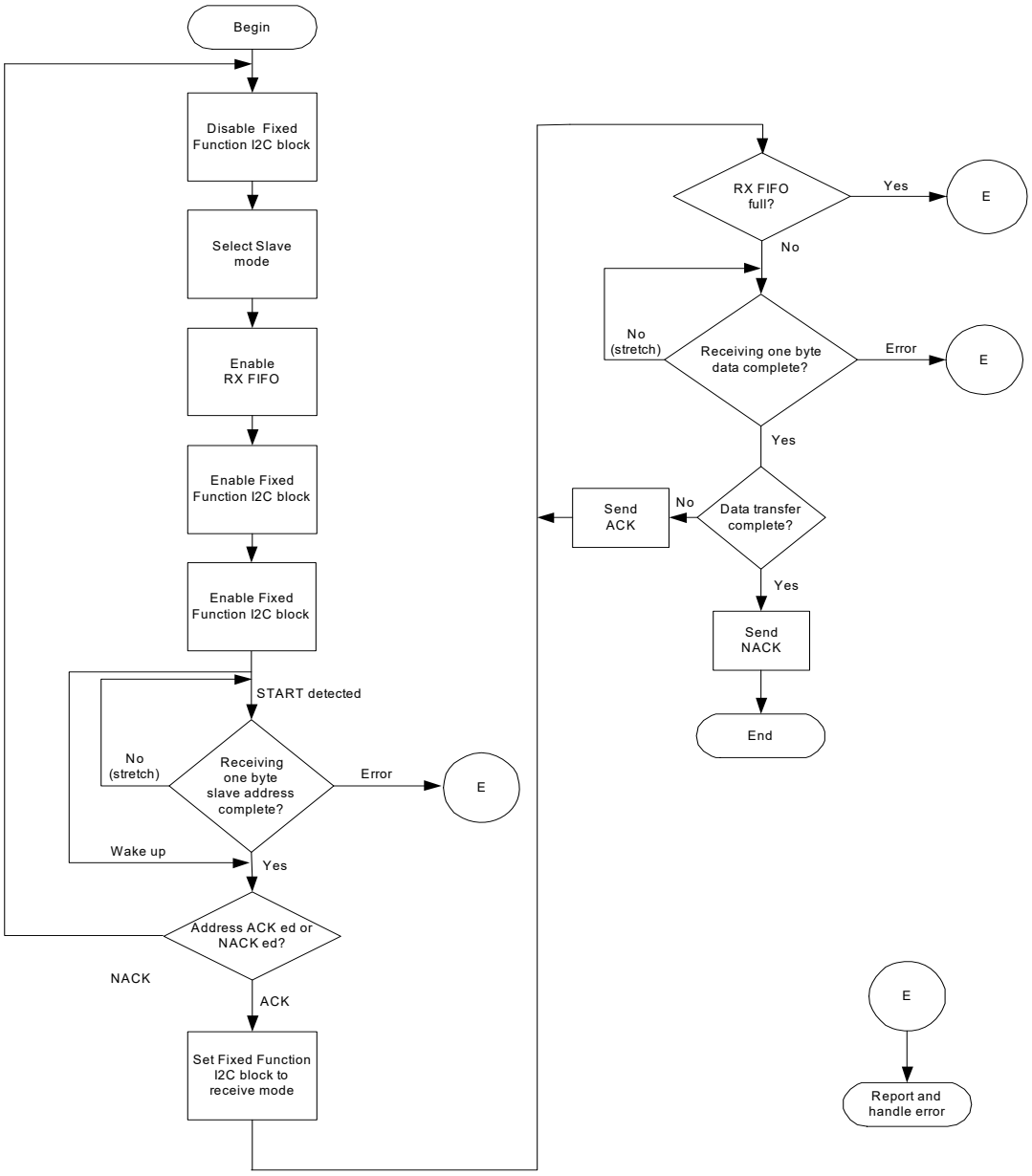

14.4.13 EZ Slave Mode Transfer Example

The EZ Slave mode transmits or receives data.

14.4.13.1 EZ Slave Transmit

Figure 14-30. EZI2C Slave Mode Write Operation Flow Chart

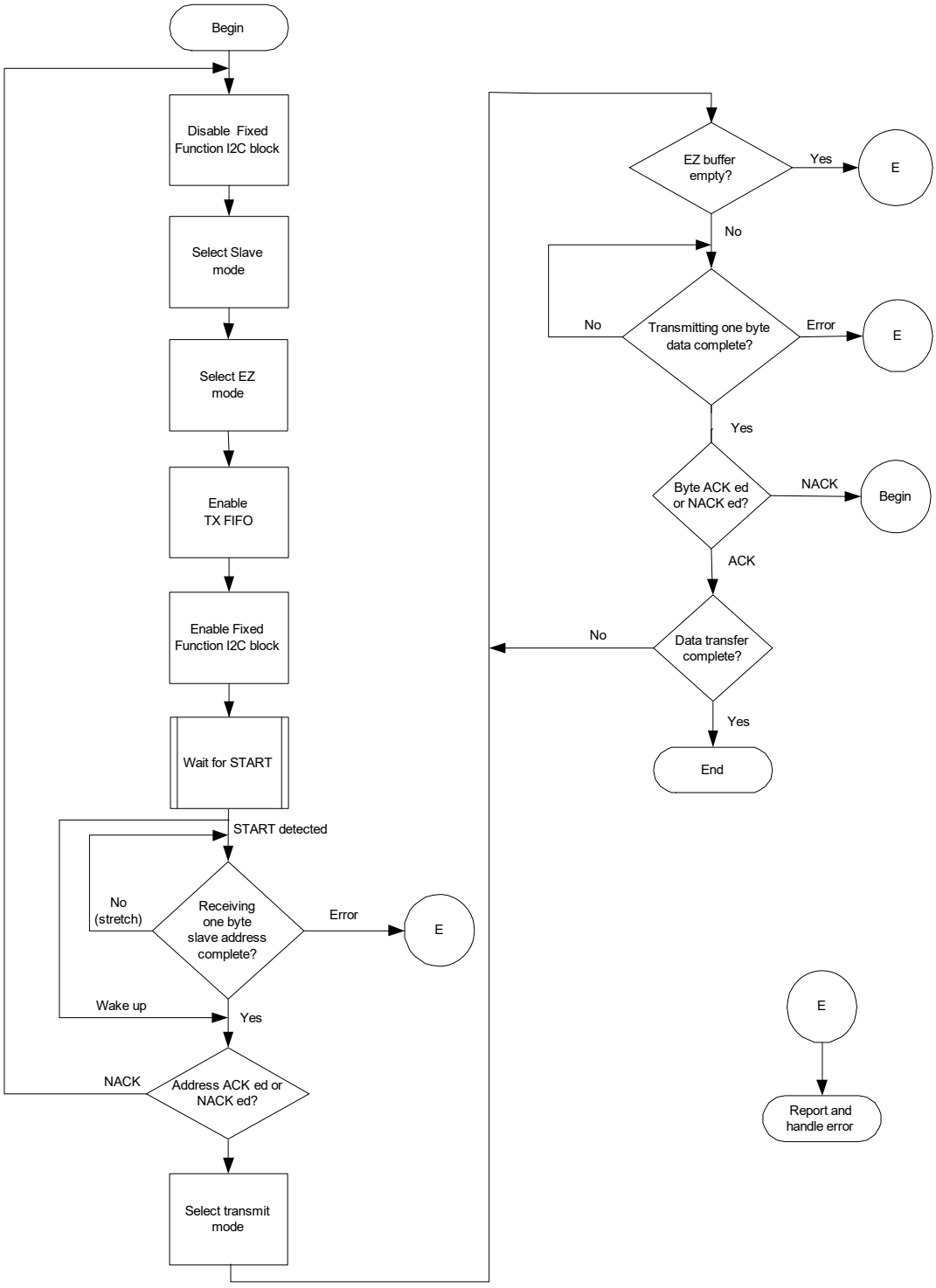

14.4.13.2 EZ Slave Receive

Figure 14-31. EZI2C Slave Mode Read Operation Flow Chart

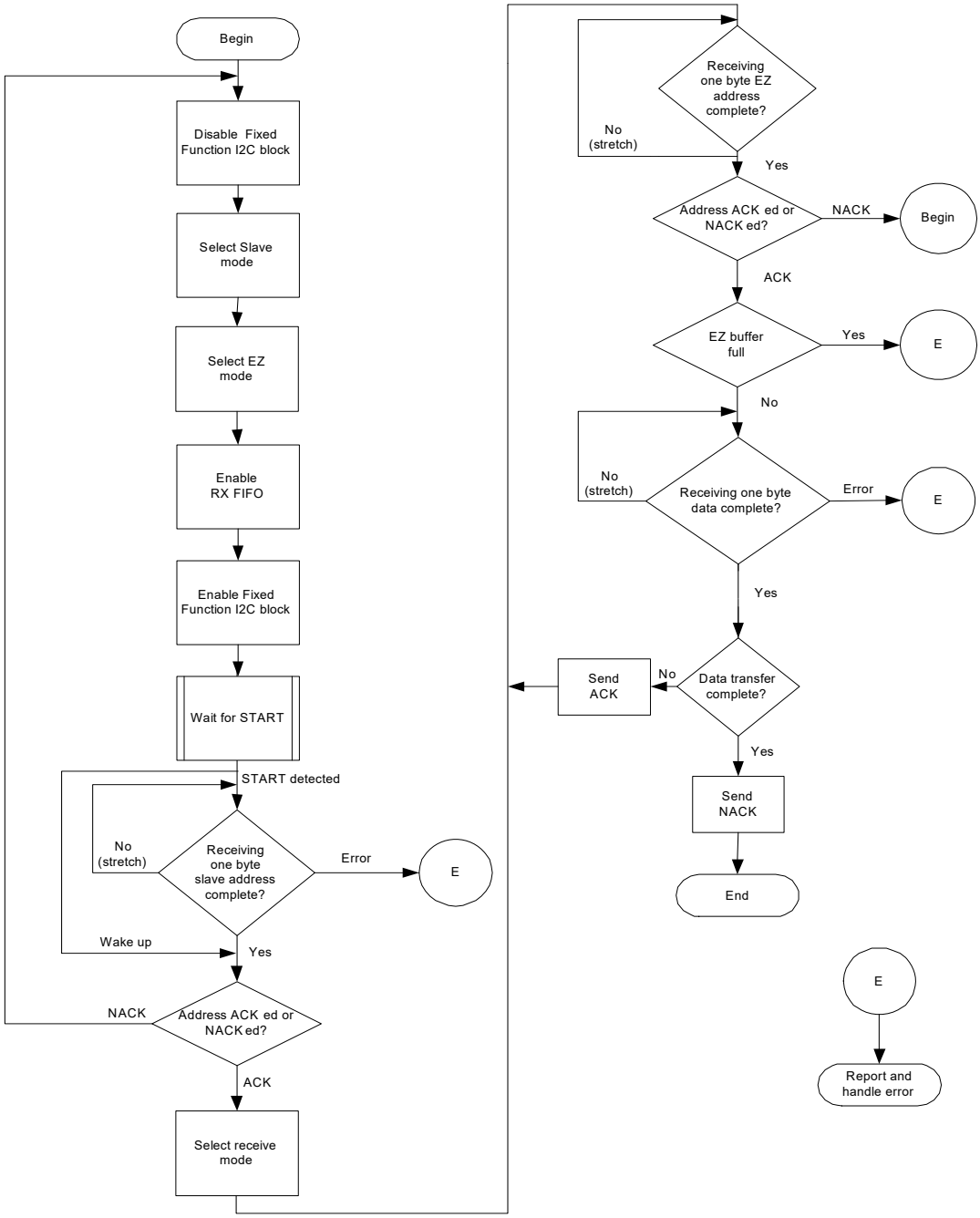

14.4.14 Multi-Master Mode Transfer Example

In multi-master mode, data can be transferred with the slave mode enabled or not enabled.

14.4.14.1 Multi-Master - Slave Not Enabled

Figure 14-32. Multi-Master, Slave Not Enabled Flow Chart

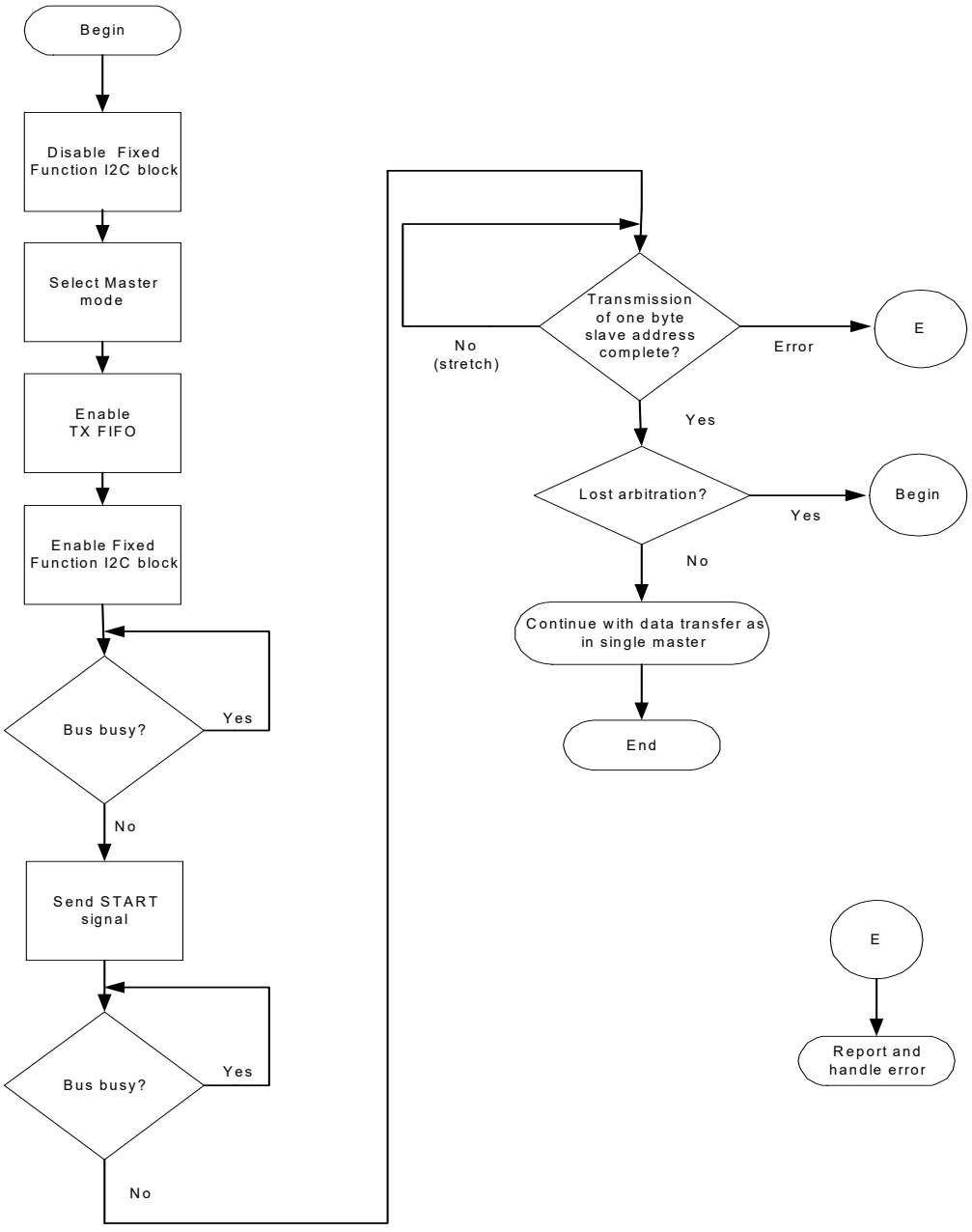

14.4.14.2 Multi-Master - Slave Enabled

Figure 14-33. Multi-Master, Slave Enabled Flow Chart

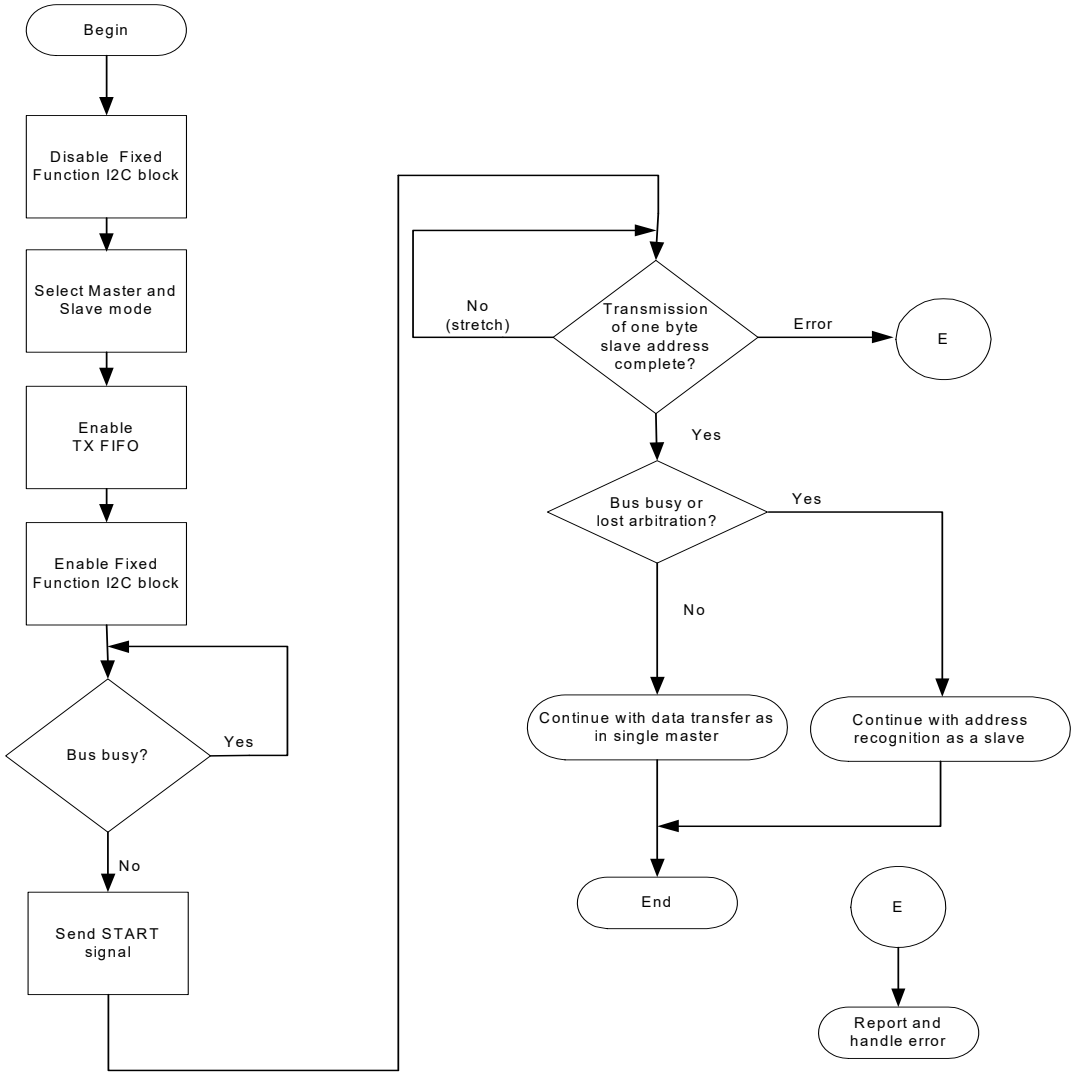

15. Timer, Counter, and PWM

The Timer, Counter, and Pulse Width Modulator (TCPWM) block in PSoC® 4 implements the 16-bit timer, counter, pulse width modulator (PWM), and quadrature decoder functionality. The block can be used to measure the period and pulse width of an input signal (timer), find the number of times a particular event occurs (counter), generate PWM signals, or decode quadrature signals. This chapter explains the features, implementation, and operational modes of the TCPWM block.

15.1 Features

- Five 16-bit timers, counters, or pulse width modulators (PWM)
- The TCPWM block supports the following operational modes:
  - Timer
  - Capture
  - Quadrature decoding
  - Pulse width modulation
  - Pseudo-random PWM
  - PWM with dead time
- Multiple counting modes – up, down, and up/down
- Clock prescaling (division by 1, 2, 4, ... 64, 128)
- Double buffering of compare/capture and period values
- Supports interrupt on:
  - Terminal Count – The final value in the counter register is reached
  - Capture/Compare – The count is captured to the capture/compare register or the counter value equals the compare value
- Underflow, overflow, and capture/compare output signals
- Complementary line output for PWMs
- Selectable start, reload, stop, count, and capture event signals for the TCPWM underflow, overflow, and capture/compare signals of other TCPWMs, output of LPCOMPs, and from the dedicated GPIOs with rising edge, falling edge, both edges, and level trigger options

15.2 Block Diagram

Figure 15-1. TCPWM Block Diagram

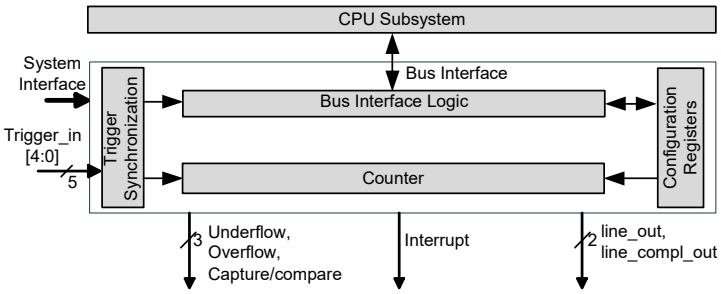

The block has these interfaces:

- Bus interface: Connects the block to the CPU subsystem.
- I/O signal interface: Connects input triggers (such as reload, start, stop, count, and capture)
- Interrupts: Provides interrupt request signals from the counter, based on terminal count (TC) or CC conditions.
- System interface: Consists of control signals such as clock and reset from the system resources subsystem.

This TCPWM block can be configured by writing to the TCPWM registers. See "TCPWM Registers" on page 144 for more information on all registers required for this block.

15.2.1 Enabling and Disabling Counter in TCPWM Block

The counter can be enabled by setting the COUNTER_ENABLED field (bit 0) of the control register TCPWM_CTRL.

Note The counter must be configured before enabling it. If the counter is enabled after being configured, registers are updated with the new configuration values. Disabling the counter retains the values in the registers until it is enabled again (or reconfigured).

15.2.2 Clocking

The TCPWM receives the HFCLK through the system interface to synchronize all events in the block. The counter enable signal (counter_en), which is generated when the counter is enabled, gates the HFCLK to provide a counter-specific clock (counter_clock). Output triggers (explained later in this chapter) are also synchronized with the HFCLK.

Clock Prescaling: counter_clock can be prescaled, with divider values of 1, 2, 4… 64, 128. This prescaling is done by modifying the GENERIC field of the counter control (TCPWM_CNT_CTRL) register, as shown in Table 15-1.

Table 15-1. Bit-Field Setting to Prescale Counter Clock

GENERIC[10:8]	Description
0	Divide by 1
1	Divide by 2
2	Divide by 4
3	Divide by 8
4	Divide by 16
5	Divide by 32
6	Divide by 64
7	Divide by 128

Note Clock prescaling cannot be done in quadrature mode and PWM-DT mode.

15.2.3 Events Based on Trigger Inputs

These are the events triggered by hardware or software.

- Reload
- Start
- Stop
- Count
- Capture/switch

Hardware triggers can be level signal, rising edge, falling edge, or both edges. Figure 15-2 shows the selection of edge detection type for any event trigger signal.

Any edge (rising, falling, or both) or level (high) can be selected for the occurrence of an event by configuring the trigger control register 1 (TCPWM_CNT_TR_CTRL1). This edge/level configuration can be selected for each trigger event separately. Alternatively, firmware can generate an event by writing to the counter command register (TCPWM_CMD), as shown in Figure 15-2.

Figure 15-2. Trigger Signal Edge Detection

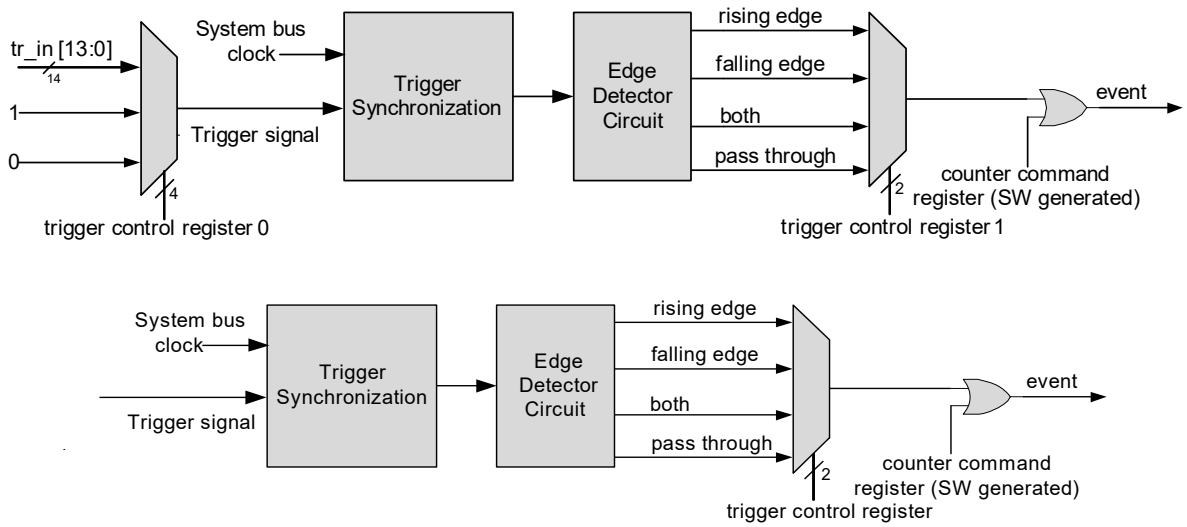

The trigger signal to generate an event can be a GPIO signal, TCPWM's underflow, compare match or overflow signal, or a low-power comparator (LPCOMP) output signal. Figure 15-3 shows the trigger signal selection for all the events.

Figure 15-3. Trigger Mux

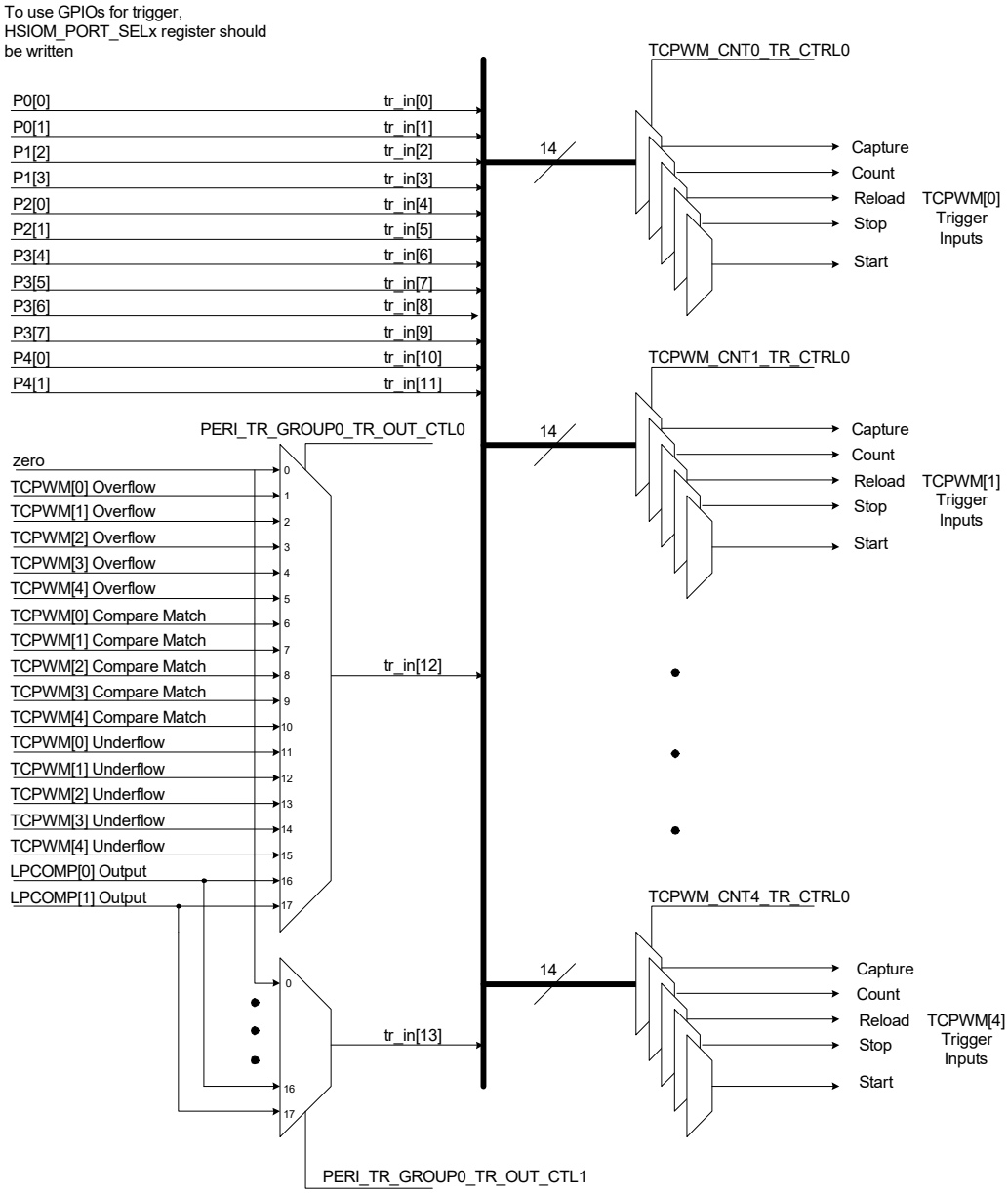

The events derived from these triggers can have different definitions in different modes of the TCPWM block.

- **Reload:** A reload event initializes and starts the counter.
  - In UP counting mode, the count register (TCPWM_CNT_COUNTER) is initialized with '0'.
  - In DOWN counting mode, the counter is initialized with the period value stored in the TCPWM_CNT_PERIOD register.
  - In UP/DOWN counting mode, the count register is initialized with '0'.
  - In quadrature mode, the reload event acts as a quadrature index event. An index/reload event indicates a completed rotation and can be used to synchronize quadrature decoding.
- **Start:** A start event is used to start counting; it can be used after a stop event or after re-initialization of the counter register to any value by software. Note that the count register is not initialized on this event.
  - In quadrature mode, the start event acts as quadrature phase input phiB, which is explained in detail in "Quadrature Decoder Mode" on page 133.
- **Count:** A count event causes the counter to increment or decrement, depending on its configuration.
  - In quadrature mode, the count event acts as quadrature phase input phiA.

- **Stop:** A stop event stops the counter from incrementing or decrementing. A start event will start the counting again.
  - In the PWM modes, the stop event acts as a kill event. A kill event disables all the PWM output lines.
- **Capture:** A capture event copies the counter register value to the capture register and capture register value to the buffer capture register. In the PWM modes, the capture event acts as a switch event. It switches the values of the capture/compare and period registers with their buffer counterparts. This feature can be used to modulate the pulse width and frequency.

Notes

- All trigger inputs are synchronized to the HFCLK.
- When more than one event occurs in the same counter clock period, one or more events may be missed. This can happen for high-frequency events (frequencies close to the counter frequency) and a timer configuration in which a pre-scaled (divided) counter clock is used.

15.2.4 Output Signals

The TCPWM block generates several output signals, as shown in Figure 15-4.

Figure 15-4. TCPWM Output Signals

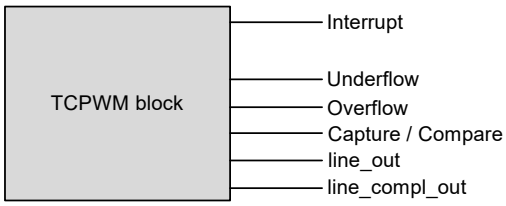

15.2.4.1 Signals upon Trigger Conditions

- Counter generates an internal overflow (OV) condition when counting up and the count register reaches the period value.
- Counter generates an internal underflow (UN) condition when counting down and the count register reaches zero.
- The capture/compare (CC) condition is generated by the TCPWM when the counter is running and one of the following conditions occur:
  - The counter value equals the compare value.
  - A capture event occurs - When a capture event occurs, the TCPWM_CNT_COUNTER register value is copied to the capture register and the capture register value is copied to the buffer capture register.

Note These signals, when they occur, remain at logic high for two cycles of the HFCLK. For reliable operation, the condition that causes this trigger should be less than a quarter of the HFCLK. For example, if the HFCLK is running at 24 MHz, the condition causing the trigger should occur at a frequency less than 6 MHz.

15.2.4.2 Interrupts

The TCPWM block provides a dedicated interrupt output signal from the counter. An interrupt can be generated for a TC condition or a CC condition. The exact definition of these conditions is mode-specific.

Four registers are used for interrupt handling in this block, as shown in Table 15-2.

Table 15-2. Interrupt Register

Interrupt Registers	Bits	Name	Description
TCPWM_CNT_INTR (Interrupt request register)	0	TC	This bit is set to '1', when a terminal count is detected. Write '1' to clear this bit.
	1	CC_MATCH	This bit is set to ‘1’ when the counter value matches capture/compare register value. Write '1' to clear this bit.
TCPWM_CNT_INTR_SET (Interrupt set request register)	0	TC	Write '1' to set the corresponding bit in the interrupt request register. When read, this register reflects the interrupt request register status.
	1	CC_MATCH	Write '1' to set the corresponding bit in the interrupt request register. When read, this register reflects the interrupt request register status.

Table 15-2. Interrupt Register

Interrupt Registers	Bits	Name	Description
TCPWM_CNT_INTR_MASK (Interrupt mask register)	0	TC	Mask bit for the corresponding TC bit in the interrupt request register.
	1	CC_MATCH	Mask bit for the corresponding CC_MATCH bit in the interrupt request register.
TCPWM_CNT_INTR_MASKED (Interrupt masked request register)	0	TC	Logical AND of the corresponding TC request and mask bits.
	1	CC_MATCH	Logical AND of the corresponding CC_MATCH request and mask bits.

15.2.4.3 Outputs

The TCPWM has two outputs, line_out and line_compl_out (complementary of line_out). Note that the OV, UN, and CC conditions can be used to drive line_out and line_compl_out if needed, by configuring the TCPWM_CNT_TR_CTRL2 register (Table 15-3).

Table 15-3. Configuring Output Line for OV, UN, and CC Conditions

Field	Bit	Value	Event	Description
CC_MATCH_MODE Default Value = 3	1:0	0	Set line_out to '1	Configures output line on a compare match (CC) event
		1	Clear line_out to '0	
		2	Invert line_out	
		3	No change	
OVERFLOW_MODE Default Value = 3	3:2	0	Set line_out to '1	Configures output line on a overflow (OV) event
		1	Clear line_out to '0	
		2	Invert line_out	
		3	No change	
UNDERFLOW_MODE Default Value = 3	5:4	0	Set line_out to '1	Configures output line on a underflow (UN) event
		1	Clear line_out to '0	
		2	Invert line_out	
		3	No change	

15.2.5 Power Modes

The TCPWM block works in Active and Sleep modes. The TCPWM block is powered from V_{CCD}. The configuration registers and other logic are powered in Deep-Sleep mode to keep the states of configuration registers. See Table 15-4 for details.

Table 15-4. Power Modes in TCPWM Block

Power Mode	Block Status
Active	This block is fully operational in this mode with clock running and power switched on.
Sleep	All counter clocks are on, but bus interface cannot be accessed.
Deep-Sleep	In this mode, the power to this block is still on but no bus clock is provided; hence, the logic is not functional. All the configuration registers will keep their state.

15.3 Modes of Operation

The counter block can function in six operational modes, as shown in Table 15-5. The MODE [26:24] field of the counter control register (TCPWM_CNTx_CTRL) configures the counter in the specific operational mode.

Table 15-5. Operational Mode Configuration

Mode	MODE Field [26:24]	Description
Timer	000	Implements a timer or counter. The counter increments or decrements by '1' at every counter clock cycle in which a count event is detected.
Capture	010	Implements a timer or counter with capture input. The counter increments or decrements by '1' at every counter clock cycle in which a count event is detected. When a capture event occurs, the counter value copies into the capture register.
Quadrature Decoder	011	Implements a quadrature decoder, where the counter is decremented or incremented, based on two phase inputs according to the selected (X1, X2 or X4) encoding scheme.
PWM	100	Implements edge/center-aligned PWMs with an 8-bit clock prescaler and buffered compare/period registers.
PWM-DT	101	Implements edge/center-aligned PWMs with configurable 8-bit dead time (on both outputs) and buffered compare/period registers.
PWM-PR	110	Implements a pseudo-random PWM using a 16-bit linear feedback shift register (LFSR).

The counter can be configured to count up, down, and up/down by setting the UP_DOWN_MODE[17:16] field in the TCPWM_CNT_CTRL register, as shown in Table 15-6.

Table 15-6. Counting Mode Configuration

Counting Modes	UP_DOWN_MODE[17:16]	Description
UP Counting Mode	00	Increments the counter until the period value is reached. A Terminal Count (TC) condition is generated when the counter reaches the period value.
DOWN Counting Mode	01	Decrements the counter from the period value until 0 is reached. A TC condition is generated when the counter reaches ‘0’.
UP/DOWN Counting Mode 0	10	Increments the counter until the period value is reached, and then decrements the counter until ‘0’ is reached. A TC condition is generated only when ‘0’ is reached.
UP/DOWN Counting Mode 1	11	Similar to up/down counting mode 0 but a TC condition is generated when the counter reaches ‘0’ and when the counter value reaches the period value.

15.3.1 Timer Mode

The timer mode is commonly used to measure the time of occurrence of an event or to measure the time difference between two events.

15.3.1.1 Block Diagram

Figure 15-5. Timer Mode Block Diagram

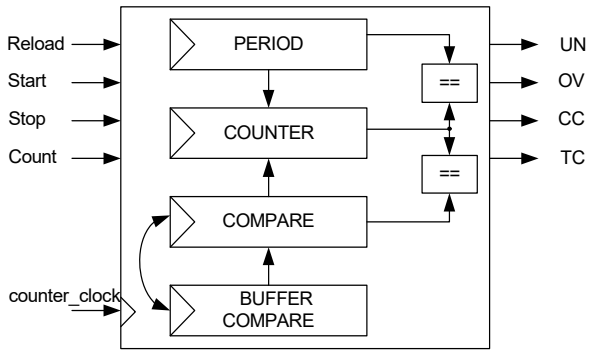

15.3.1.2 How It Works

The timer can be configured to count in up, down, and up/down counting modes. It can also be configured to run in either continuous mode or one-shot mode. The following explains the working of the timer:

- The timer is an up, down, and up/down counter.
  - The current count value is stored in the count register (TCPWM_CNTx_COUNTER).
    Note It is not recommended to write values to this register while the counter is running.
  - The period value for the timer is stored in the period register.
- The counter is re-initialized in different counting modes as follows:
  - In the up counting mode, after the count reaches the period value, the count register is automatically reloaded with 0.
  - In the down counting mode, after the count register reaches zero, the count register is reloaded with the value in the period register.
  - In the up/down counting modes, the count register value is not updated upon reaching the terminal values. Instead the direction of counting changes when the count value reaches 0 or the period value.
- The CC condition is generated when the count register value equals the compare register value. Upon this condition, the compare register and buffer compare register switch their values if enabled by the AUTO_RELOAD_CC bit-field of the counter control (TCPWM_CNT_CTRL) register. This condition can be used to generate an interrupt request.

Figure 15-6 shows the timer operational mode of the counter in four different counting modes. The period register contains the maximum counter value.

- In the up counting mode, a period value of A results in A+1 counter cycles (0 to A).
- In the down counting mode, a period value of A results in A+1 counter cycles (A to 0).
- In the two up/down counting modes (0 and 1), a period value of A results in 2*A counter cycles (0 to A and back to 0).

Figure 15-6. Timing Diagram for Timer in Multiple Counting Modes

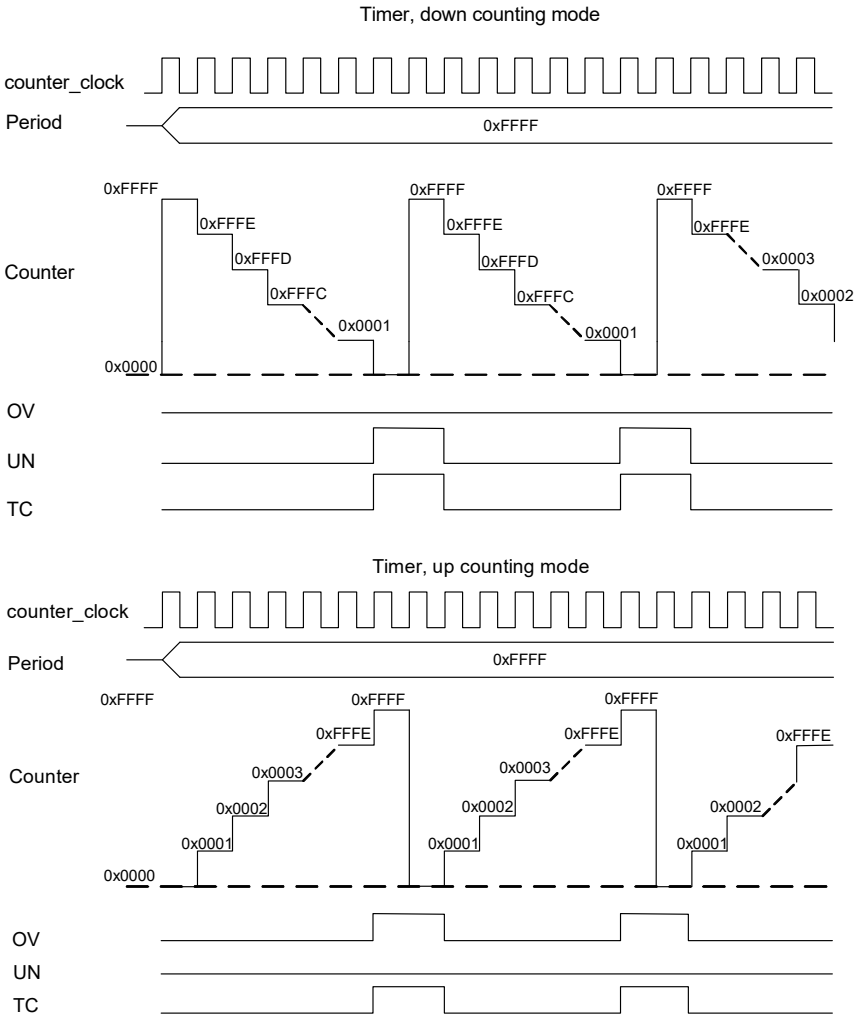

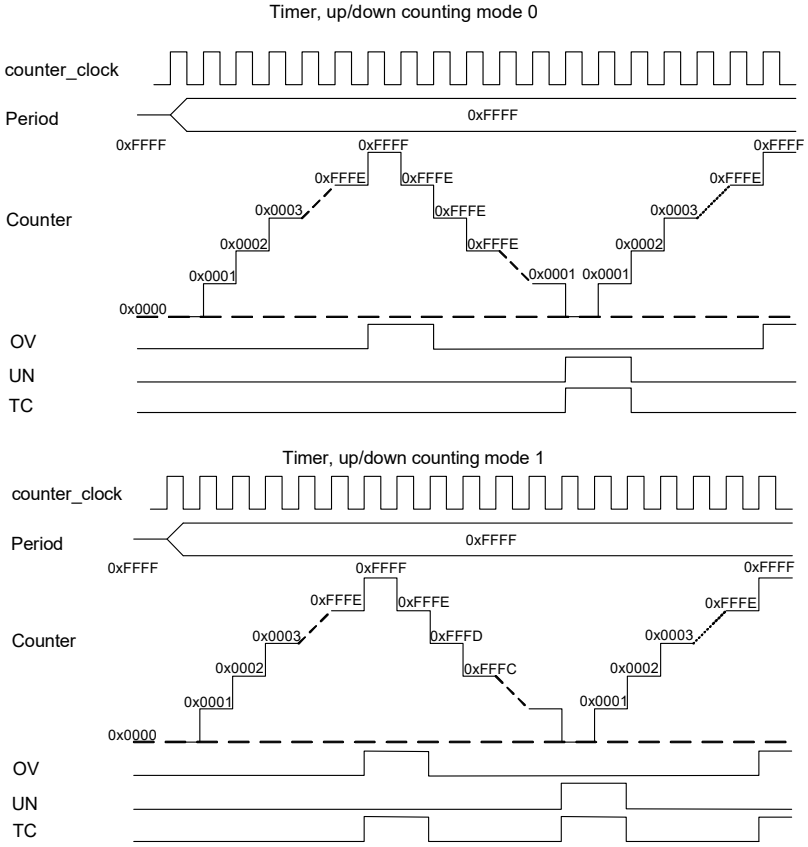

Note The OV and UN signals remain at logic high for two cycles of the HFCLK, as explained in "Signals upon Trigger Conditions" on page 125. The figures in this chapter assume that HFCLK and counter clock are the same.

15.3.1.3 Configuring Counter for Timer Mode

The steps to configure the counter for Timer mode of operation and the affected register bits are as follows.

1. Disable the counter by writing '0' to the COUNTER_ENABLED field of the TCPWM_CTRL register.
2. Select Timer mode by writing '000' to the MODE[26:24] field of the TCPWM_CNT_CTRL register.
3. Set the required 16-bit period in the TCPWM_CNT_PERIOD register.
4. Set the 16-bit compare value in the TCPWM_CNT_CC register and the buffer compare value in the TCPWM_CNT_CC_BUFF register.
5. Set AUTO_RELOAD_CC field of the TCPWM_CNT_CTRL register, if required to switch values at every CC condition.
6. Set clock prescaling by writing to the GENERIC[15:8] field of the TCPWM_CNT_CTRL register, as shown in Table 15-1.
7. Set the direction of counting by writing to the UP_DOWN_MODE[17:16] field of the TCPWM_CNT_CTRL register, as shown in Table 15-6.
8. The timer can be configured to run either in continuous mode or one-shot mode by writing 0 or 1, respectively to the ONE_SHOT[18] field of TCPWM_CNT_CTRL.
9. Set the TCPWM_CNT_TR_CTRL0 register to select the trigger that causes the event (Reload, Start, Stop, Capture, and Count).
10. Set the TCPWM_CNT_TR_CTRL1 register to select the edge of the trigger that causes the event (Reload, Start, Stop, Capture, and Count).
11. If required, set the interrupt upon TC or CC condition, as shown in "Interrupts" on page 125.
12. Enable the counter by writing '1' to the COUNTER_ENABLED field of the TCPWM_CTRL register. A start trigger must be provided through firmware (TCPWM_CMD register) to start the counter if the hardware start signal is not enabled.

15.3.2 Capture Mode

In the capture mode, the counter value can be captured at any time either through a firmware write to command register (TCPWM_CMD) or a capture trigger input. This mode is used for period and pulse width measurement.

15.3.2.1 Block Diagram

Figure 15-7. Capture Mode Block Diagram

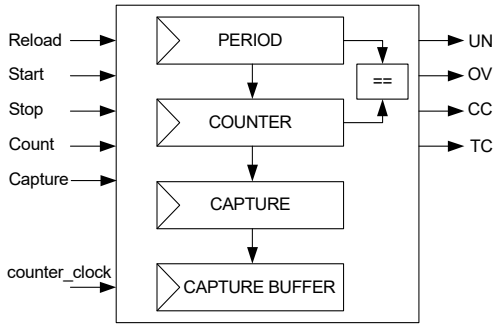

15.3.2.2 How it Works

The counter can be set to count in up, down, and up/down counting modes by configuring the UP_DOWN_MODE[17:16] bit-field of the counter control register (TCPWM_CNT_CTRL).

Operation in capture mode occurs as follows:

- During a capture event, generated either by hardware or software, the current count register value is copied to the capture register (TCPWM_CNT_CC) and the capture register value is copied to the buffer capture register (TCPWM_CNT_C-C_BUFF).
- A pulse on the CC output signal is generated when the counter value is copied to the capture register. This condition can also be used to generate an interrupt request.

Figure 15-8 illustrates the capture behavior in the up counting mode.

Figure 15-8. Timing Diagram of Counter in Capture Mode, Up Counting Mode

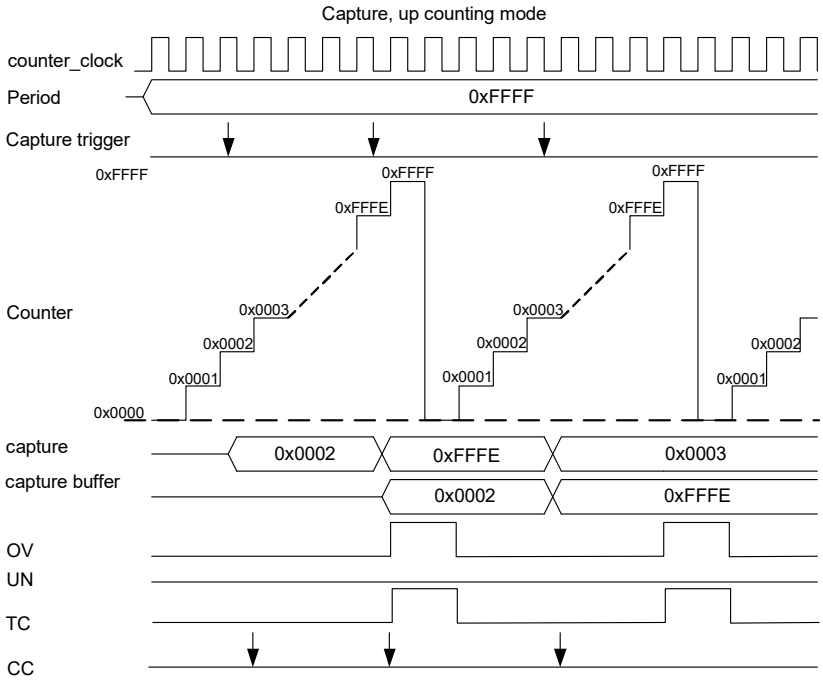

In the figure, observe that:

- The period register contains the maximum count value.
- Internal overflow (OV) and TC conditions are generated when the counter reaches the period value.
- A capture event is only possible at the edges or through software. Use trigger control register 1 to configure the edge detection.
- Multiple capture events in a single clock cycle are handled as:
  - Even number of capture events - no event is observed
  - Odd number of capture events - single event is observed

This happens when the capture signal frequency is greater than the counter_clock frequency.

15.3.2.3 Configuring Counter for Capture Mode

The steps to configure the counter for Capture mode operation and the affected register bits are as follows.

1. Disable the counter by writing '0' to the COUNTER_ENABLED field of the TCPWM_CTRL register.
2. Select Capture mode by writing '010' to the MODE[26:24] field of the TCPWM_CNT_CTRL register.
3. Set the required 16-bit period in the TCPWM_CNT_PERIOD register.
4. Set clock prescaling by writing to the GENERIC[15:8] field of the TCPWM_CNT_CTRL register, as shown in Table 15-1.
5. Set the direction of counting by writing to the UP_DOWN_MODE[17:16] field of the TCPWM_CNT_CTRL register, as shown in Table 15-6.
6. Counter can be configured to run either in continuous mode or one-shot mode by writing 0 or 1, respectively to the ONE_-SHOT[18] field of the TCPWM_CNT_CTRL register.
7. Set the TCPWM_CNT_TR_CTRL0 register to select the trigger that causes the event (Reload, Start, Stop, Capture, and Count).
8. Set the TCPWM_CNT_TR_CTRL1 register to select the edge that causes the event (Reload, Start, Stop, Capture, and Count).
9. If required, set the interrupt upon TC or CC condition, as shown in “Interrupts” on page 125.
10. Enable the counter by writing '1' to the COUNTER_ENABLED field of the TCPWM_CTRL register. A start trigger must be provided through firmware (TCPWM_CMD register) to start the counter if the hardware start signal is not enabled.

15.3.3 Quadrature Decoder Mode

Quadrature decoders are used to determine speed and position of a rotary device (such as servo motors, volume control wheels, and PC mice). The quadrature encoder signals are used as phiA and phiB inputs to the decoder.

15.3.3.1 Block Diagram

Figure 15-9. Quadrature Mode Block Diagram

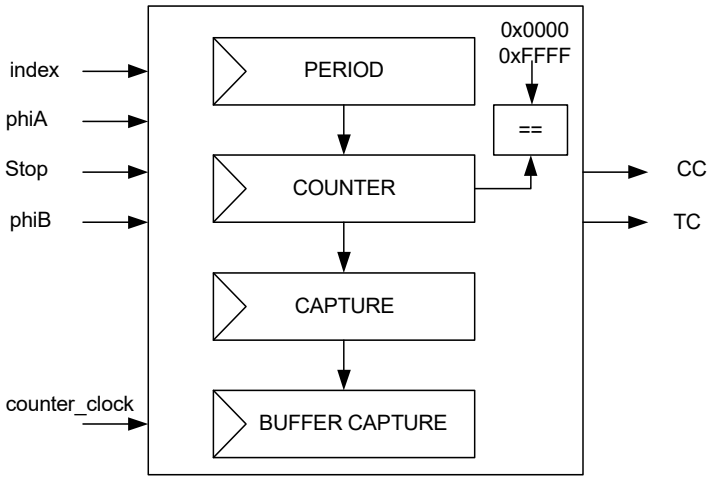

15.3.3.2 How It Works

Quadrature decoding only runs on counter_clock. It can operate in three sub-modes: X1, X2, and X4 modes. These encoding modes can be controlled by the QUADRATURE_MODE[21:20] field of the counter control register (TCPWM_CNT_CTRL). This mode uses double buffered capture registers.

The Quadrature mode operation occurs as follows:

- Quadrature phases phiA and phiB: Counting direction is determined by the phase relationship between phiA and phiB. These phases are connected to the count and the start trigger inputs, respectively as hardware input to the decoder.
- Quadrature index signal: This is connected to the reload signal as a hardware input. This event generates a TC condition, as shown in Figure 15-10.

  On TC, the counter is set to 0x0000 (in the up counting mode) or to the period value (in the down counting mode).

  Note The down counting mode is recommended to be used with a period value of 0x8000 (the mid-point value).
- A pulse on CC output signal is generated when the count register value reaches 0x0000 or 0xFFFF. On a CC condition, the count register is set to the period value (0x8000 in this case).
- On TC or CC condition:
  - Count register value is copied to the capture register
  - Capture register value is copied to the buffer capture register
  - This condition can be used to generate an interrupt request
- The value in the capture register can be used to determine which condition caused the event and whether:
  - A counter underflow occurred (value 0)
  - A counter overflow occurred (value 0xFFFF)
  - An index/TC event occurred (value is not equal to either 0 or 0xFFFF)
- The DOWN bit field of counter status (TCPWM_CNTx_STATUS) register can be read to determine the current counting direction. Value '0' indicates a previous increment operation and value '1' indicates previous decrement operation. Figure 15-10 illustrates quadrature behavior in the X1 encoding mode.
  - A positive edge on phiA increments the counter when phiB is '0' and decrements the counter when phiB is '1'.
  - The count register is initialized with the period value on an index/reload event.
  - Terminal count is generated when the counter is initialized by index event. This event can be used to generate an interrupt.
  - When the count register reaches 0xFFFF (the maximum count register value), the count register value is copied to the capture register and the count register is initialized with period value (0x8000 in this case).

Figure 15-10. Timing Diagram for Quadrature Mode, X1 Encoding

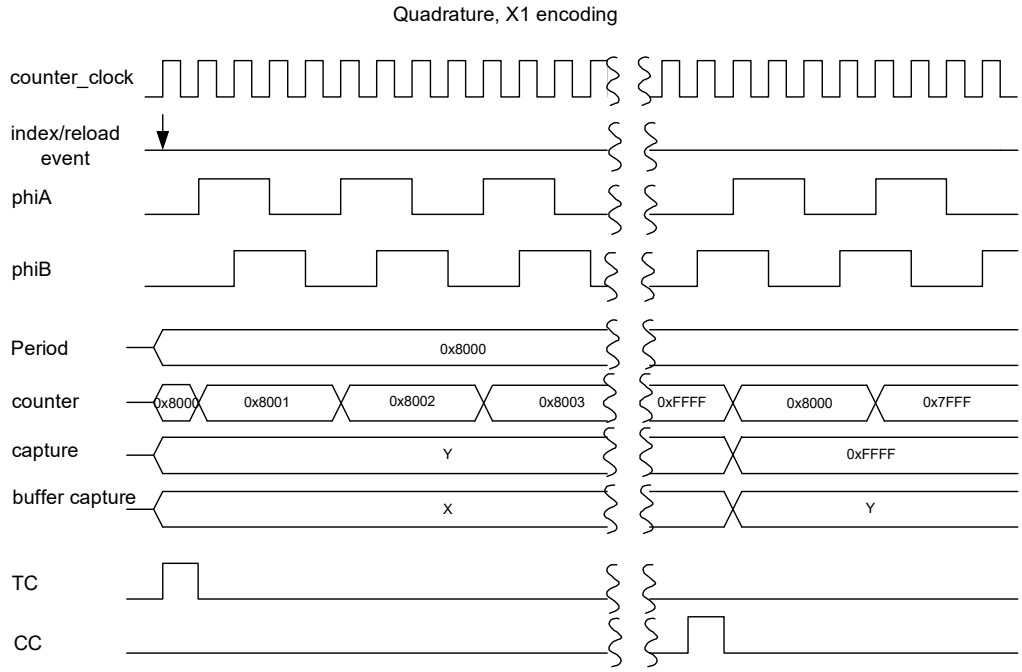

The quadrature phases are detected on the counter_clock. Within a single counter_clock period, the phases should not change value more than once. The X2 and X4 quadrature encoding modes count twice and four times as fast as the X1 encoding mode.

Figure 15-11 illustrates the quadrature mode behavior in the X2 and X4 encoding modes.

Figure 15-11. Timing Diagram for Quadrature Mode, X2 and X4 Encoding

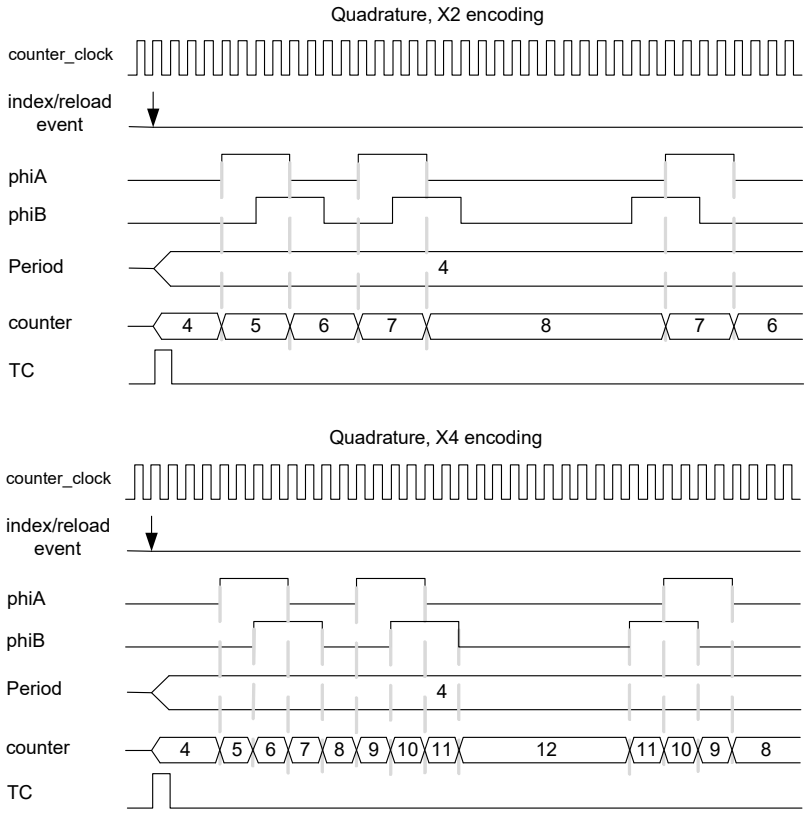

15.3.3.3 Configuring Counter for Quadrature Mode

The steps to configure the counter for quadrature mode of operation and the affected register bits are as follows.

1. Disable the counter by writing '0' to the COUNTER_ENABLED field of the TCPWM_CTRL register.
2. Select Quadrature mode by writing '011' to the MODE[26:24] field of the TCPWM_CNT_CTRL register.
3. Set the required 16-bit period in the TCPWM_CNT_PERIOD register.
4. Set the required encoding mode by writing to the QUADRATURE_MODE[21:20] field of the TCPWM_CNT_CTRL register.
5. Set the TCPWM_CNT_TR_CTRL0 register to select the trigger that causes the event (Index and Stop).
6. Set the TCPWM_CNT_TR_CTRL1 register to select the edge that causes the event (Index and Stop).
7. If required, set the interrupt upon TC or CC condition, as shown in “Interrupts” on page 125.
8. Enable the counter by writing '1' to the COUNTER_ENABLED field of the TCPWM_CTRL register.

15.3.4 Pulse Width Modulation Mode

The PWM mode is also called the Digital Comparator mode. The comparison output is a PWM signal whose period depends on the period register value and duty cycle depends on the compare and period register values.

PWM period = (period value/counter clock frequency) in left- and right-aligned modes

PWM period = (2 × (period value/counter clock frequency)) in center-aligned mode

Duty cycle = (compare value/period value) in left- and right-aligned modes

Duty cycle = ((period value-compare value)/period value) in center-aligned mode

15.3.4.1 Block Diagram

Figure 15-12. PWM Mode Block Diagram

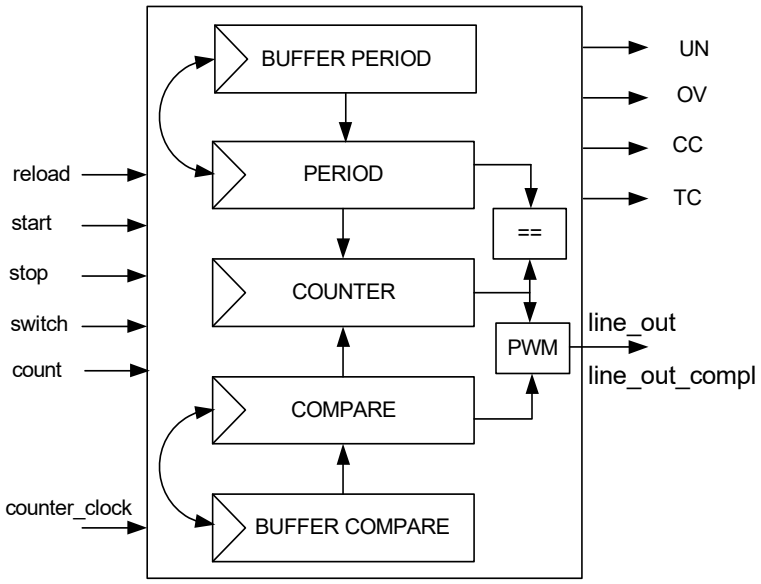

15.3.4.2 How It Works

The PWM mode can output left, right, center, or asymmetrically aligned PWM signals. The desired output alignment is achieved by using the counter's up, down, and up/down counting modes selected using UP_DOWN_MODE [17:16] bits in the TCPWM_CNT_CTRL register, as shown in Table 15-6.

This CC signal along with OV and UN signals control the PWM output line. The signals can toggle the output line or set it to a logic '0' or '1' by configuring the TCPWM_CNT_TR_CTRL2 register. By configuring how the signals impact the output line, the desired PWM output alignment can be obtained.

The recommended way to modify the duty cycle is:

- The buffer period register and buffer compare register are updated with new values.
- On TC, the period and compare registers are automatically updated with the buffer period and buffer compare registers when there is an active switch event. The AUTO_RELOAD_CC and AUTO_RELOAD_PERIOD fields of the counter control register are set to '1'. When a switch event is detected, it is remembered until the next TC event. Pass through signal (selected during event detection setting) cannot trigger a switch event.
- Updates to the buffer period register and buffer compare register should be completed before the next TC with an active switch event; otherwise, switching does not reflect the register update, as shown in Figure 15-14.

In the center-aligned mode, the output line is set to '0' at Terminal Count and toggled at the CC condition

At the reload event, the count register is initialized and starts counting in the appropriate mode. At every count, the count register value is compared with compare register value to generate the CC signal on match.

Figure 15-13 illustrates center-aligned PWM with buffered period and compare registers (up/down counting mode 0).

Figure 15-13. Timing Diagram for Center Aligned PWM

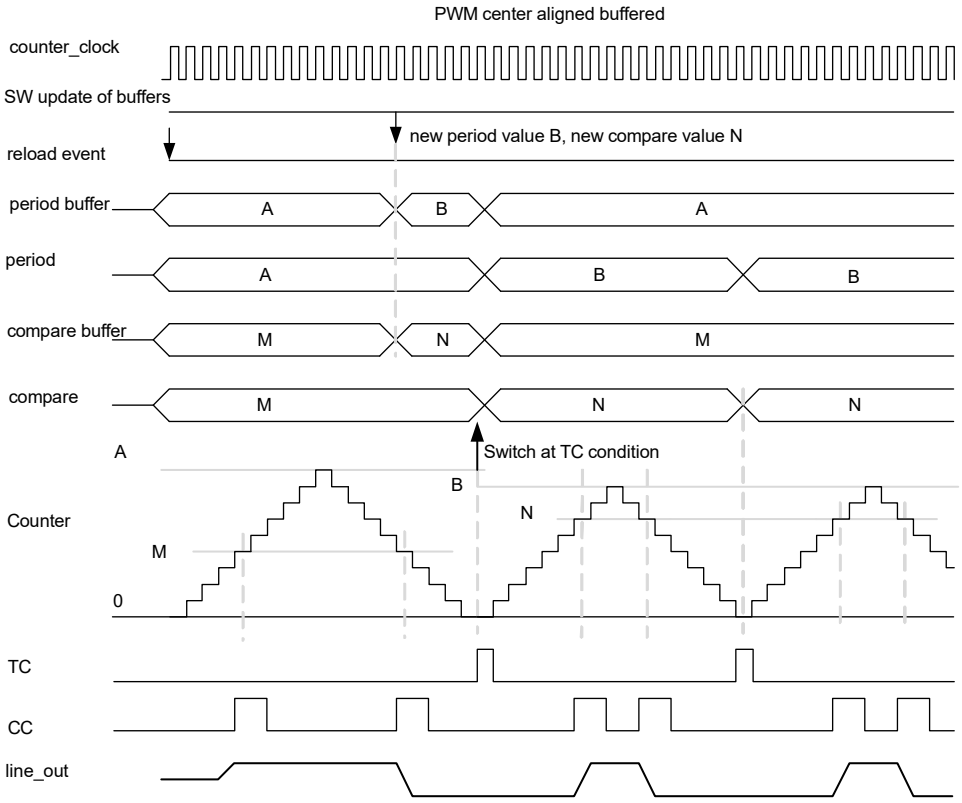

Figure 15-13 illustrates center-aligned PWM with software generated switch events:

- Software generates a switch event only after both the period buffer and compare buffer registers are updated.
- Because the updates of the second PWM pulse come late (after the terminal count), the first PWM pulse is repeated.
- Note that the switch event is automatically cleared by hardware at TC after the event takes effect.

Figure 15-14. Timing Diagram for Center Aligned PWM (software switch event

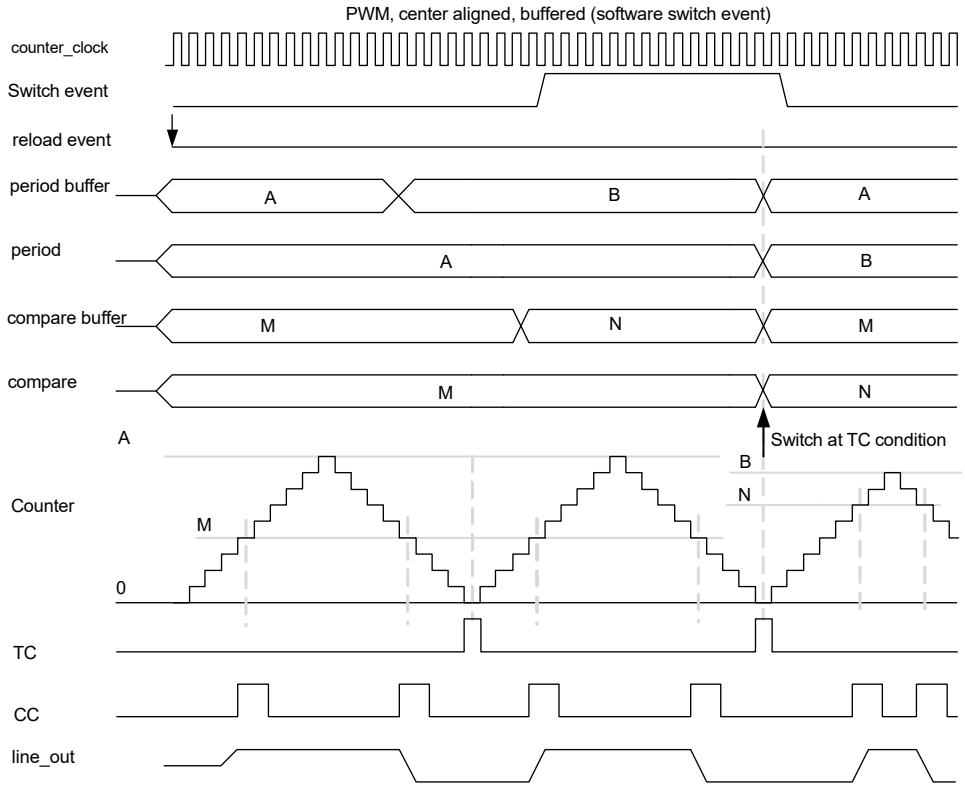

15.3.4.3 Other Configurations

- For asymmetric PWM, the up/down counting mode 1 should be used. This causes a TC when the counter reaches either ‘0’ or the period value. To create an asymmetric PWM, the compare register is changed at every TC (when the counter reaches either ‘0’ or the period value), whereas the period register is only changed at every other TC (only when the counter reaches ‘0’).
- For left-aligned PWM, use the up counting mode; configure the OV condition to set output line to '1' and CC condition to reset the output line to '0'. See Table 15-3.
- For right-aligned PWM, use the down counting mode; configure UN condition to reset output line to '0' and CC condition to set the output line to '1'. See Table 15-3.

15.3.4.4 Kill Feature

The kill feature gives the ability to disable both output lines immediately. This event can be programmed to stop the counter by modifying the PWM_STOP_ON_KILL and PWM_SYNC_KILL fields of the counter control register, as shown in Table 15-7.

Table 15-7. Field Setting for Stop on Kill Feature

PWM_STOP_ON_KILL Field	Comments
0	The kill trigger temporarily blocks the PWM output line but the counter is still running.
1	The kill trigger temporarily blocks the PWM output line and the counter is also stopped.

A kill event can be programmed to be asynchronous or synchronous, as shown in Table 15-8.

Table 15-8. Field Setting for Synchronous/Asynchronous Kill

PWM_SYNC_KILL Field	Comments
0	An asynchronous kill event lasts as long as it is present. This event requires pass through mode.
1	A synchronous kill event disables the output lines until the next TC event. This event requires rising edge mode.

In the synchronous kill, PWM cannot be started before the next TC. To restart the PWM immediately after kill input is removed, kill event should be asynchronous (see Table 15-8). The generated stop event disables both output lines. In this case, the reload event can use the same trigger input signal but should be used in falling edge detection mode.

15.3.4.5 Configuring Counter for PWM Mode

The steps to configure the counter for the PWM mode of operation and the affected register bits are as follows.

1. Disable the counter by writing '0' to the COUNTER_ENABLED field of the TCPWM_CTRL register.
2. Select PWM mode by writing '100' to the MODE[26:24] field of the TCPWM_CNT_CTRL register.
3. Set clock prescaling by writing to the GENERIC[15:8] field of the TCPWM_CNT_CTRL register, as shown in Table 15-1.
4. Set the required 16-bit period in the TCPWM_CNT_PERIOD register and the buffer period value in the TCPWM_CNT_PERIOD_BUFF register to switch values, if required.
5. Set the 16-bit compare value in the TCPWM_CNT_CC register and buffer compare value in the TCPWM_CNT_CC_BUFF register to switch values, if required.
6. Set the direction of counting by writing to the UP_DOWN_MODE[17:16] field of the TCPWM_CNT_CTRL register to configure left-aligned, right-aligned, or center-aligned PWM, as shown in Table 15-6.
7. Set the PWM_STOP_ON_KILL and PWM_SYNC_KILL fields of the TCPWM_CNT_CTRL register as required.
8. Set the TCPWM_CNT_TR_CTRL0 register to select the trigger that causes the event (Reload, Start, Kill, Switch, and Count).
9. Set the TCPWM_CNT_TR_CTRL1 register to select the edge that causes the event (Reload, Start, Kill, Switch, and Count).
10. line_out and line_out_compl can be controlled by the TCPWM_CNT_TR_CTRL2 register to set, reset, or invert upon CC, OV, and UN conditions.
11. If required, set the interrupt upon TC or CC condition, as shown in “Interrupts” on page 125.
12. Enable the counter by writing '1' to the COUNTER_ENABLED field of the TCPWM_CTRL register. A start trigger must be provided through firmware (TCPWM_CMD register) to start the counter if the hardware start signal is not enabled.

15.3.5 Pulse Width Modulation with Dead Time Mode

Dead time is used to delay the transitions of both ‘line_out’ and ‘line_out_compl’ signals. It separates the transition edges of these two signals by a specified time interval. Two complementary output lines 'dt_line' and 'dt_line_compl' are derived from these two lines. During the dead band period, both compare output and complement compare output are at logic ‘0’ for a fixed period. The dead band feature allows the generation of two non-overlapping PWM pulses. A maximum dead time of 255 clocks can be generated using this feature.

15.3.5.1 Block Diagram

Figure 15-15. PWM-DT Mode Block Diagram

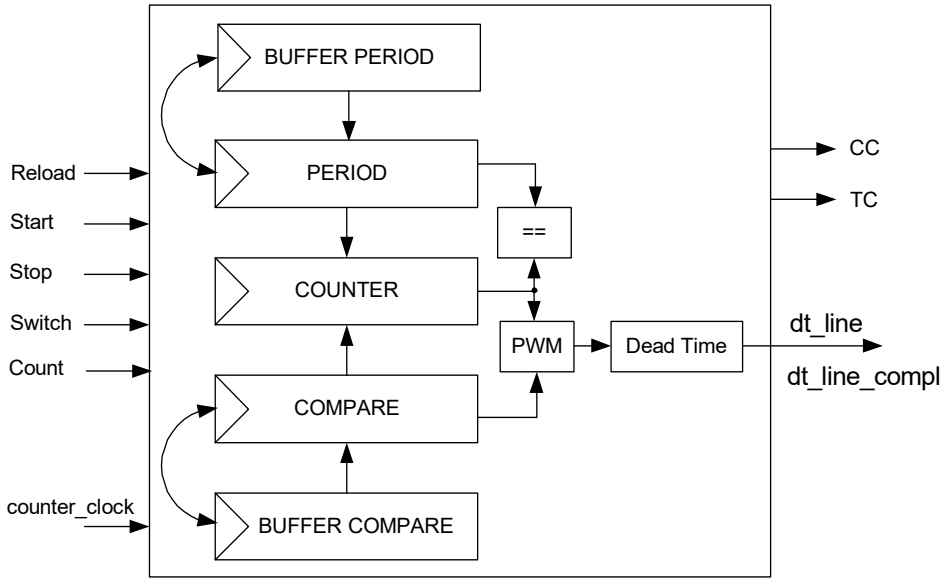

15.3.5.2 How It Works

The PWM operation with Dead Time mode occurs as follows:

- On the rising edge of the PWM line_out, depending upon UN, OV, and CC conditions, the dead time block sets the dt_line and dt_line_compl to '0'.
- The dead band period is loaded and counted for the period configured in the register.
- When the dead band period is complete, dt_line is set to '1'.
- On the falling edge of the PWM line_out depending upon UN, OV, and CC conditions, the dead time block sets the dt_line and dt_line_compl to '0'.
- The dead band period is loaded and counted for the period configured in the register.
- When the dead band period has completed, dt_line_compl is set to '1'.
- A dead band period of zero has no effect on the dt_line and is the same as line_out.
- When the duration of the dead time equals or exceeds the width of a pulse, the pulse is removed.

This mode follows PWM mode and supports the following features available with that mode:

- Various output alignment modes
- Two complementary output lines, dt_line and dt_line_compl, derived from PWM "line_out" and "line _out_compl", respectively
  - Stop/kill event with synchronous and asynchronous modes
  - Conditional switch event for compare and buffer compare registers and period and buffer period registers

This mode does not support clock prescaling.

Figure 15-16 illustrates how the complementary output lines dt_line and dt_line_compl are generated from the PWM output line, line_out.

Figure 15-16. Timing Diagram for PWM, with and without Dead Time

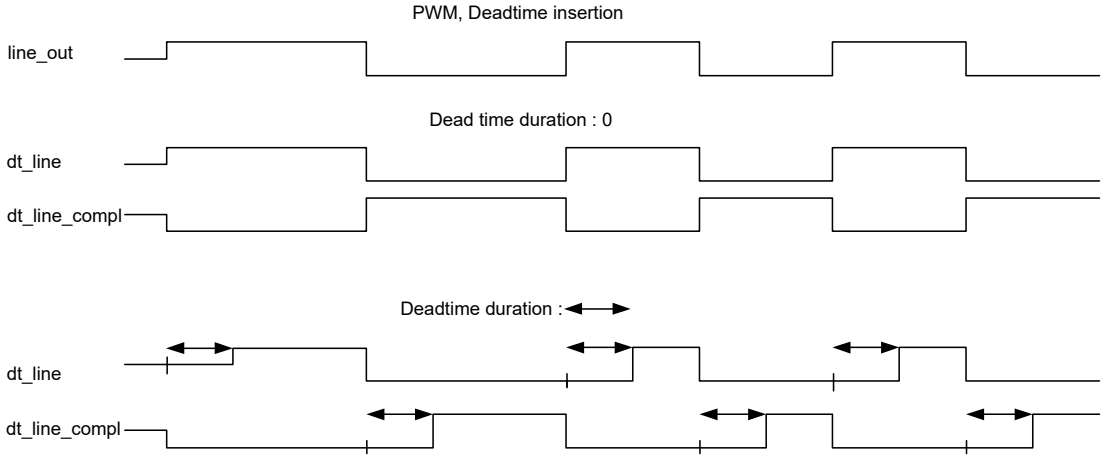

15.3.5.3 Configuring Counter for PWM with Dead Time Mode

The steps to configure the counter for PWM with Dead Time mode of operation and the affected register bits are as follows:

1. Disable the counter by writing '0' to the COUNTER_ENABLED field of the TCPWM_CTRL register.
2. Select PWM with Dead Time mode by writing '101' to the MODE[26:24] field of the TCPWM_CNT_CTRL register.
3. Set the required dead time by writing to the GENERIC[15:8] field of the TCPWM_CNT_CTRL register, as shown in Table 15-1.
4. Set the required 16-bit period in the TCPWM_CNT_PERIOD register and the buffer period value in the TCPWM_CNT_PERIOD_BUFF register to switch values, if required.
5. Set the 16-bit compare value in the TCPWM_CNT_CC register and the buffer compare value in the TCPWM_CNT_CC_BUFF register to switch values, if required.
6. Set the direction of counting by writing to the UP_DOWN_MODE[17:16] field of the TCPWM_CNT_CTRL register to configure left-aligned, right-aligned, or center-aligned PWM, as shown in Table 15-6.
7. Set the PWM_STOP_ON_KILL and PWM_SYNC_KILL fields of the TCPWM_CNT_CTRL register as required, as shown in the “Pulse Width Modulation Mode” on page 136.
8. Set the TCPWM_CNT_TR_CTRL0 register to select the trigger that causes the event (Reload, Start, Kill, Switch, and Count).
9. Set the TCPWM_CNT_TR_CTRL1 register to select the edge that causes the event (Reload, Start, Kill, Switch, and Count).
10. dt_line and dt_line_compl can be controlled by the TCPWM_CNT_TR_CTRL2 register to set, reset, or invert upon CC, OV, and UN conditions.
11. If required, set the interrupt upon TC or CC condition, as shown in “Interrupts” on page 125.
12. Enable the counter by writing '1' to the COUNTER_ENABLED field of the TCPWM_CTRL register. A start trigger must be provided through firmware (TCPWM_CMD register) to start the counter if hardware start signal is not enabled.

15.3.6 Pulse Width Modulation Pseudo-Random Mode

This mode uses the linear feedback shift register (LFSR). LFSR is a shift register whose input bit is a linear function of its previous state.

15.3.6.1 Block Diagram

Figure 15-17. PWM-PR Mode Block Diagram

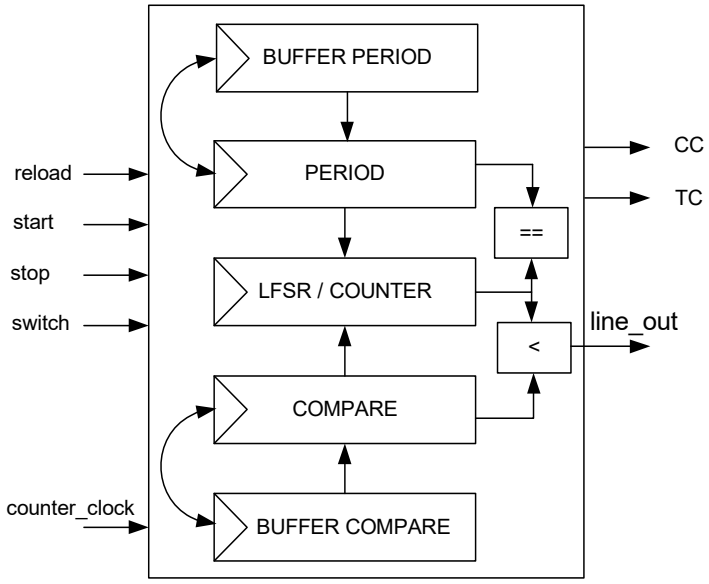

15.3.6.2 How It Works

The counter register is used to implement LFSR with the polynomial: $x^{16}+x^{14}+x^{13}+x^{11}+1$, as shown in Figure 15-18. It generates all the numbers in the range [1, 0xFFFF] in a pseudo-random sequence. Note that the counter register should be initialized with a non-zero value.

Figure 15-18. Pseudo-Random Sequence Generation using Counter Register

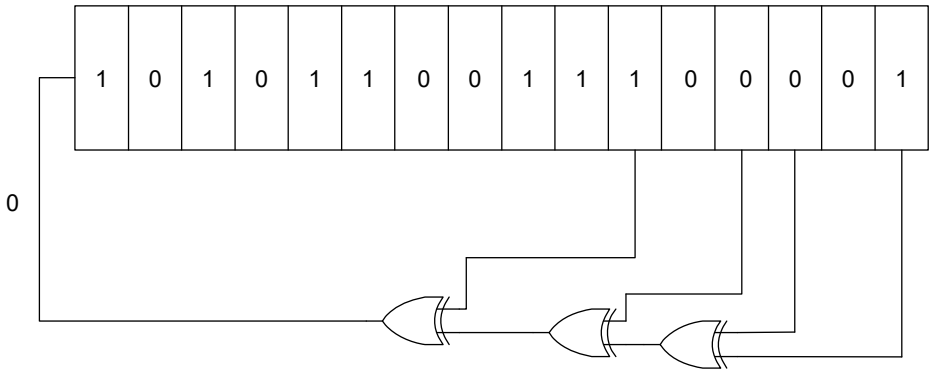

The following steps describe the process:

- The PWM output line, ‘line_out’, is driven with '1' when the lower 15-bit value of the counter register is smaller than the value in the compare register (when counter[14:0] < compare[15:0]). A compare value of ‘0x8000’ or higher always results in a '1' on the PWM output line. A compare value of ‘0’ always results in a '0' on the PWM output line.
- A reload event behaves similar to a start event; however, it does not initialize the counter.
- Terminal count is generated when the counter value equals the period value. LFSR generates a predictable pattern of counter values for a certain initial value. This predictability can be used to calculate the counter value after a certain amount of LFSR iterations ‘n’. This calculated counter value can be used as a period value and the TC is generated after ‘n’ iterations.
- At TC, a switch/capture event conditionally switches the compare and period register pairs (based on the AUTO_RELOAD_CC and AUTO_RELOAD_PERIOD fields of the counter control register).
- A kill event can be programmed to stop the counter as described in previous sections.
- One shot mode can be configured by setting the ONE_-SHOT field of the counter control register. At terminal count, the counter is stopped by hardware.
- In this mode, underflow, overflow, and trigger condition events do not occur.
- CC condition occurs when the counter is running and its value equals compare value. Figure 15-19 illustrates pseudo-random noise behavior.
- A compare value of 0x4000 results in 50 percent duty cycle (only the lower 15 bits of the 16- bit counter are used to compare with the compare register value).

Figure 15-19. Timing Diagram for Pseudo-Random PWM

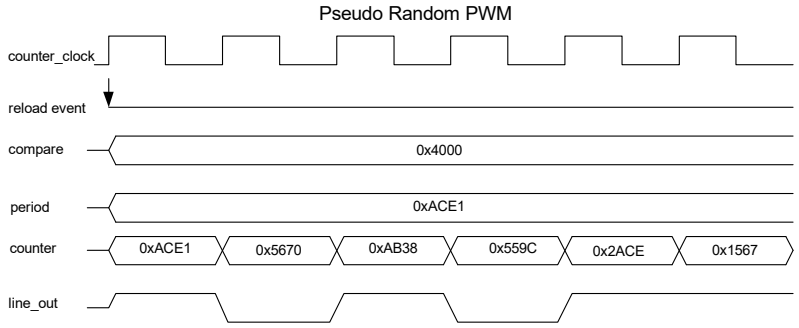

A capture/switch input signal may switch the values between the compare and compare buffer registers and the period and period buffer registers. This functionality can be used to modulate between two different compare values using a trigger input signal to control the modulation.

Note Capture/switch input signal can only be triggered by an edge (rising, falling, or both). This input signal is remembered until the next terminal count.

15.3.6.3 Configuring Counter for Pseudo-Random PWM Mode

The steps to configure the counter for pseudo-random PWM mode of operation and the affected register bits are as follows.

1. Disable the counter by writing '0' to COUNTER_ENABLED of the TCPWM_CTRL register.
2. Select pseudo-random PWM mode by writing '110' to the MODE[26:24] field of the TCPWM_CNT_CTRL register.
3. Set the required period (16 bit) in the TCPWM_CNT_PERIOD register and buffer period value in the TCPWM_CNT_PE-RIOD_BUFF register to switch values, if required.
4. Set the 16-bit compare value in the TCPWM_CNT_CC register and the buffer compare value in the TCPWM_CNT_C-C_BUFF register to switch values.
5. Set the PWM_STOP_ON_KILL and PWM_SYNC_KILL fields of the TCPWM_CNT_CTRL register as required.
6. Set the TCPWM_CNT_TR_CTRL0 register to select the trigger that causes the event (Reload, Start, Kill, and Switch).
7. Set the TCPWM_CNT_TR_CTRL1 register to select the edge that causes the event (Reload, Start, Kill, and Switch).
8. line_out and line_out_compl can be controlled by the TCPWM_CNT_TR_CTRL2 register to set, reset, or invert upon CC, OV, and UN conditions.
9. If required, set the interrupt upon TC or CC condition, as shown in “Interrupts” on page 125.
10. Enable the counter by writing '1' to the COUNTER_ENABLED field of the TCPWM_CTRL register.

15.4 TCPWM Registers

Table 15-9. List of TCPWM Registers

Register	Comment	Features
TCPWM_CTRL	TCPWM control register	Enables the counter block
TCPWM_CMD	TCPWM command register	Generates software events
TCPWM_INTR_CAUSE	TCPWM counter interrupt cause register	Determines the source of the combined interrupt signal
TCPWM_CNT_CTRL	Counter control register	Configures counter mode, encoding modes, one shot mode, switching, kill feature, dead time, clock pre-scaling, and counting direction
TCPWM_CNT_STATUS	Counter status register	Reads the direction of counting, dead time duration, and clock pre-scaling; checks if the counter is running
TCPWM_CNT_COUNTER	Count register	Contains the 16-bit counter value
TCPWM_CNT_CC	Counter compare/capture register	Captures the counter value or compares the value with counter value
TCPWM_CNT_CC_BUFF	Counter buffered compare/capture register	Buffer register for counter CC register; switches period value
TCPWM_CNT_PERIOD	Counter period register	Contains upper value of the counter
TCPWM_CNT_PERIOD_BUFF	Counter buffered period register	Buffer register for counter period register; switches compare value
TCPWM_CNT_TR_CTRL0	Counter trigger control register 0	Selects trigger for specific counter events
TCPWM_CNT_TR_CTRL1	Counter trigger control register 1	Determine edge detection for specific counter input signals
TCPWM_CNT_TR_CTRL2	Counter trigger control register 2	Controls counter output lines upon CC, OV, and UN conditions
TCPWM_CNT_INTR	Interrupt request register	Sets the register bit when TC or CC condition is detected
TCPWM_CNT_INTR_SET	Interrupt set request register	Sets the corresponding bits in interrupt request register
TCPWM_CNT_INTR_MASK	Interrupt mask register	Mask for interrupt request register
TCPWM_CNT_INTR_MASKED	Interrupt masked request register	Bitwise AND of interrupt request and mask registers

Section E: Analog System

This section encompasses the following chapter:

- Low-Power Comparator chapter on page 146
- LCD Direct Drive chapter on page 153
- CapSense chapter on page 152

Top Level Architecture

Analog System Block Diagram

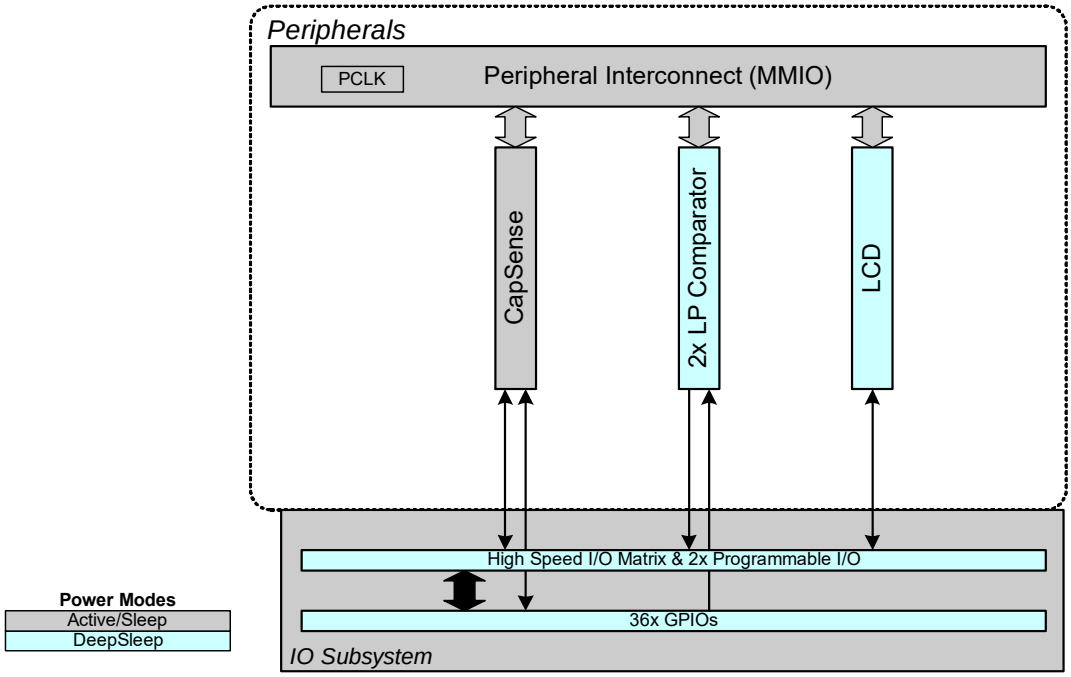

16. Low-Power Comparator

PSoC® 4 devices have two low-power comparators. These comparators can perform fast analog signal comparison in all system power modes. Refer to the Power Modes chapter on page 67 for details on various device power modes. The positive and negative inputs can be connected to dedicated GPIO pins or to AMUXBUS-A/AMUXBUS-B. The comparator output can be read by the CPU through a status register, used as an interrupt or wakeup source or routed to a GPIO.

16.1 Features

PSoC 4 comparators have the following features:

- Configurable positive and negative inputs
- Programmable power and speed
- Ultra low-power mode support (<4 µA)
- Optional 10-mV input hysteresis
- Low-input offset voltage (<4 mV after trim)
- Wakeup source in Deep-Sleep mode

16.2 Block Diagram

Figure 16-1 shows the block diagram for the low-power comparator.

Figure 16-1. Low-Power Comparator Block Diagram

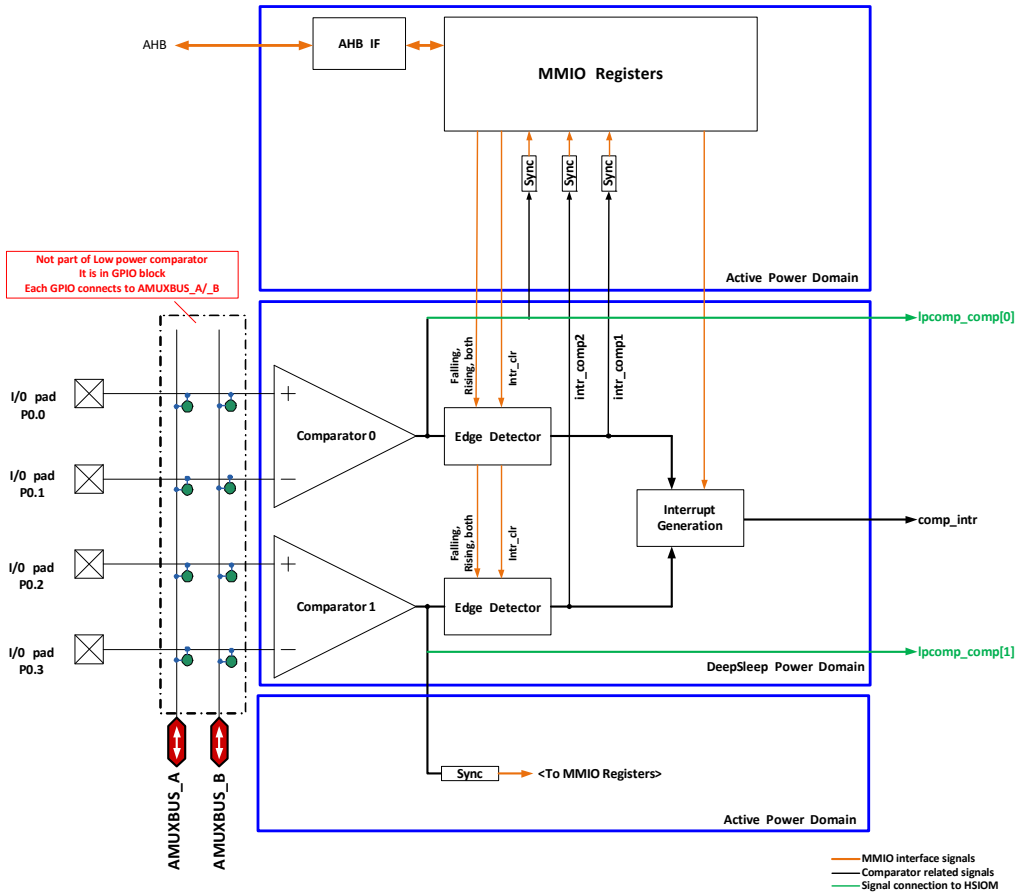

16.3 How It Works

The following sections describe the operation of the PSoC 4 low-power comparator, including input configuration, power and speed mode, output and interrupt configuration, hysteresis, wake up from low-power modes, comparator clock, and offset trim.

16.3.1 Input Configuration

Inputs to the comparators can be as follows:

- Both positive and negative inputs from dedicated input pins.
- Both positive and negative inputs from any pin through AMUXBUS (not available in Deep-Sleep mode).
- One input from an external pin and another input from an internally-generated signal. Both inputs can be connected to either positive or negative inputs of the comparator. The internally-generated signal is connected to the comparator input through the analog AMUXBUS.
- Both positive and negative inputs from internally-generated signals. The internally-generated signals are connected to the comparator input through AMUXBUS-A/ AMUXBUS-B.

From Figure 16-1, note that P0.0 and P0.1 connect to positive and negative inputs of Comparator 0; P0.2 and P0.3 connect to the inputs of Comparator 1. Also, note that the AMUXBUS nets do not have a direct connection to the comparator inputs. Therefore, the comparator connection is routed to the AMUXBUS nets through the corresponding input pin. These input pins will not be available for other purposes when using AMUXBUS for comparator connections. They should be left open in designs that use AMUXBUS for comparator input connection. Note that AMUXBUS connections are not available in Deep-Sleep mode. If Deep-Sleep operation is required, the low-power comparator must be connected to the dedicated pins. This restriction also includes routing of any internally-generated signal, which uses the AMUXBUS for the connection. See the I/O System chapter on page 36 for more details on connecting the GPIO to AMUXBUS A/B or setting up the GPIO for comparator input.

16.3.2 Output and Interrupt Configuration

The output of Comparator0 and Comparator1 are available in the OUT1 bit [6] and OUT2 bit [14], respectively, in the LPCOMP_CONFIG register (Table 16-1). The comparator outputs are synchronized to SYSCLK before latching them to the OUTx bits in the LPCOMP_CONFIG register. The output of each comparator is connected to a corresponding edge detector block. This block determines the edge that triggers the interrupt. The edge selection and interrupt enable is configured using the INTTYPE1 bits [5:4] and INTTYPE2 bits [13:12] in the LPCOMP_CONFIG register. Using the INTTYPEx bits, the interrupt type can be selected to disabled, rising edge, falling edge, or both edges, as described in Table 16-1.

Each comparator's output can be routed directly to a GPIO pin through the HSIOM. The comparator outputs are available as Deep-Sleep source 2 connection in the HSIOM. See High-Speed I/O Matrix on page 41 for details on HSIOM. For details on the pins that support the low-power comparator output, refer to the device datasheet. The output on these pins are direct output from the comparator and are not synchronized. Because they act as Deep-Sleep source for the pins, the comparator output is available in Deep-Sleep power mode as well.

During an edge event, the comparator will trigger an interrupt (intr_comp1/intr_comp2 signals in Figure 16-1). The interrupt request is registered in the COMP1 bit [0] and COMP2 bit [1] of the LPCOMP_INTR register for Comparator0 and Comparator1, respectively. Both Comparator0 and Comparator1 share a common interrupt (comp_intr signal in Figure 16-1), which is a logical OR of the two interrupts and mapped as the low-power comparator block's interrupt in the CPU NVIC. Refer to the Interrupts chapter on page 27 for details. If both the comparators are used in a design, the COMP1 and/or COMP2 bits of the LPCOMP_INTR register need to be read in the interrupt service routine to know which one triggered the interrupt. Alternatively, COMP1_MASK bit [0] and COMP2_MASK bit [1] of the LPCOMP_INTR_MASK register can be used to mask the Comparator0 and Comparator1 interrupts to the CPU. Only the masked interrupts will be serviced by the CPU. After the interrupt is processed, the interrupt should be cleared by writing a '1' to the COMP1 and COMP2 bits of the LPCOMP_INTR register in firmware. If the interrupt is not cleared, the next compare event will not trigger an interrupt and the CPU will not be able to process the event..

The LPCOMP interrupt (comp1_intr/comp2_intr) is synchronous with SYSCLK. Clearing comp1_intr/comp2_intr are all synchronous.

LPCOMP_INTR_SET register bits [1:0] can be used to assert an interrupt for software debugging.

In Deep-Sleep mode, the wakeup interrupt controller (WIC) can be activated by a comparator edge event, which then wakes up the CPU. Thus, the LPCOMP has the capability to monitor a specified signal in low-power modes.

Table 16-1. Output and Interrupt Configuration in LPCOMP_CONFIG Register

Register[Bit_Pos]	Bit_Name	Description
LPCOMP_CONFIG[6]	OUT1	Current/Instantaneous output value of Comparator0
LPCOMP_CONFIG[14]	OUT2	Current/Instantaneous output value of Comparator1
LPCOMP_CONFIG[5:4]	INTTYPE1	Sets on which edge Comparator0 will trigger an IRQ 00: Disabled 01: Rising Edge 10: Falling Edge 11: Both rising and falling edges
LPCOMP_CONFIG[13:12]	INTTYPE2	Sets on which edge Comparator1 will trigger an IRQ 00: Disabled 01: Rising Edge 10: Falling Edge 11: Both rising and falling edges
LPCOMP_INTR[0]	COMP1	Comparator0 Interrupt: hardware sets this interrupt when Comparator0 triggers. Write a '1' to clear the interrupt
LPCOMP_INTR[1]	COMP2	Comparator2 Interrupt: hardware sets this interrupt when Comparator1 triggers. Write a '1' to clear the interrupt
LPCOMP_INTR_SET[0]	COMP1	Write a '1' to trigger the software interrupt for Comparator0
LPCOMP_INTR_SET[1]	COMP2	Write a 1 to trigger the software interrupt for Comparator1

16.3.3 Power Mode and Speed Configuration

The low-power comparators can operate in three power modes:

- Fast
- Slow
- Ultra low-power

The power or speed setting for Comparator0 is configured using MODE1 bits [1:0] in the LPCOMP_CONFIG register. The power or speed setting for Comparator1 is configured using MODE2 bits [9:8] in the same register. The power consumption and response time vary depending on the selected power mode; power consumption is highest in fast mode and lowest in ultra-low-power mode, response time is fastest in fast mode and slowest in ultra-low-power mode. Refer to the device datasheet for specifications for the response time and power consumption for various power settings.

The comparators are enabled/disabled using ENABLE1 bit [7] and ENABLE2 bit [15] in the LPCOMP_CONFIG register, as described in Table 16-2.

Note The output of the comparator may glitch when the power mode is changed while comparator is enabled. To avoid this, disable the comparator before changing the power mode.

Table 16-2. Comparator Power Mode Selection Bits MODE1 and MODE2

Register[Bit_Pos]	Bit_Name	Description
LPCOMP_CONFIG[1:0]	MODE1	Compartor0 power mode selection 00: Slow operating mode (uses less power) 01: Fast operating mode (uses more power) 10: Ultra low-power operating mode (uses lowest possible power)
LPCOMP_CONFIG[9:8]	MODE2	Compartor1 power mode selection 00: Slow operating mode (uses less power) 01: Fast operating mode (uses more power) 10: Ultra low-power operating mode (uses lowest possible power)
LPCOMP_CONFIG[7]	ENABLE1	Comparator0 enable bit 0: Disables Comparator0 1: Enables Comparator0
LPCOMP_CONFIG[15]	ENABLE2	Comparator1 enable bit 0: Disables Comparator1 1: Enables Comparator1

16.3.4 Hysteresis

For applications that compare signals close to each other and slow changing signals, hysteresis helps to avoid oscillations at the comparator output when the signals are noisy. For such applications, a fixed 10-mV hysteresis may be enabled in the comparator block.

The 10-mV hysteresis level is enabled/disabled by using the HYST1 bit [2] and HYST2 bit [10] in the LPCOMP_CONFIG register, as described in Table 16-3.

Table 16-3. Hysteresis Control Bits HYST1 and HYST2

Register[Bit_Pos]	Bit_Name	Description
LPCOMP_CONFIG[2]	HYST1	Enable/Disable 10 mV hysteresis to Comparator0 - 0: Enable Hysteresis - 1: Disable Hysteresis
LPCOMP_CONFIG[10]	HYST2	Enable/Disable 10 mV hysteresis to Comparator1 - 0: Enable Hysteresis - 1: Disable Hysteresis

16.3.5 Wakeup from Low-Power Modes

The comparator is operational in the device's low-power modes, including Sleep and Deep-Sleep modes. The comparator output interrupt can wake the device from Sleep and Deep-Sleep modes. The comparator should be enabled in the LPCOMP_CONFIG register, the INTTYPEx bits in the LPCOMP_CONFIG register should not be set to disabled, and the INTR_MASKx bit should be set in the LPCOMP_INTR_MASK register for the corresponding comparator to wake the device from low-power modes. Comparisons involving AMUXBUS connections are not available in Deep-Sleep mode.

In the Deep-Sleep power mode, a compare event on either Comparator0 or Comparator1 output will generate a wakeup interrupt. The INTTYPEx bits in the LPCOMP_CONFIG register should be configured, as required, for the corresponding comparator to wake the device from low-power modes. The mask bits in the LPCOMP_INTR_MASK register is used to select whether one or both of the comparator's interrupt is serviced by the CPU.

16.3.6 Comparator Clock

The comparator uses the system main clock SYSCLK as the clock for interrupt synchronization.

16.3.7 Offset Trim

The comparator offset is trimmed at the factory to less than 4.0 mV. The trim is a two-step process, trimmed first at common mode voltage equal to 0.1 V, then at common mode voltage equal to V_{DD}–0.1 V. Offset voltage is guaranteed to be less than 10.0 mV over the input voltage range of 0.1 V to V_{DD}–0.1 V. For normal operation, further adjustment of trim values is not recommended.

If a tighter trim is required at a specific input common mode voltage, a trim may be performed at the desired input common mode voltage. The comparator offset trim is performed using the LPCOMP_TRIM1/2/3/4 registers. LPCOMP_TRIM1 and LPCOMP_TRIM2 are used to trim comparator 0. LPCOMP_TRIM3 and LPCOMP_TRIM4 are used to trim comparator 1. The bit fields that change the trim values are TRIMA bits [4:0] in LPCOMP_TRIM1 and LPCOMP_TRIM3, and TRIMB bits [3:0] in LPCOMP_TRIM2 and LPCOMP_TRIM4. TRIMA bits are used to coarse tune the offset; TRIMB bits are used to fine tune. The use of TRIMB bits for offset correction is restricted to slow mode of comparator operation.

Any standard comparator offset trim procedure can be used to perform the trimming. The following method can be used to improve the offset at a given reference/common mode voltage input.

1. Short the comparator inputs externally and connect the voltage reference, V_{ref}, to the input.
2. Set up the comparator for comparison, turn off hysteresis, and check the output.
3. If the output is high, the offset is positive. Otherwise, the offset is negative. Follow these steps to tune the offset:
   a. Tune the TRIMA bits[4:0] until the output switches direction. TRIMA bits[3:0] control the amount of offset and TRIMA bit[4] controls the polarity of offset ('1' indicates positive offset and '0' indicates negative offset).
   b. When the tuning of TRIMA bits is complete, tune the TRIMB bits[3:0] until the output switches direction again. The TRIMB bit tuning is valid only for slow mode of comparator operation. TRIMB bit[3] controls the polarity of offset. Increasing TRIMB bits [2:0] reduces the offset.
   c. After completing step 3-b, the values available in the TRIMA and TRIMB bits will be the closest possible trim value for that particular V_{ref}.

16.4 Register Summary

Table 16-4. Low-Power Comparator Register Summary

Register	Function
LPCOMP_ID	Includes the information of LPCOMP controller ID and revision number
LPCOMP_CONFIG	LPCOMP configuration register
LPCOMP_INTR	LPCOMP interrupt register
LPCOMP_INTR_SET	LPCOMP interrupt set register
LPCOMP_INTR_MASK	LPCOMP interrupt request mask register
LPCOMP_INTR_MASKED	LPCOMP masked interrupt output register
LPCOMP_TRIM1	Trim fields for comparator 0
LPCOMP_TRIM2	Trim fields for comparator 0
LPCOMP_TRIM3	Trim fields for comparator 1
LPCOMP_TRIM4	Trim fields for comparator 1

17. CapSense

The CapSense system can measure the self-capacitance of an electrode or the mutual capacitance between a pair of electrodes. In addition to capacitive sensing, the CapSense system can function as an ADC to measure voltage on any GPIO pin that supports the CapSense functionality.

The CapSense touch sensing method in PSoC 4 MCUs, which senses self-capacitance, is known as CapSense Sigma Delta (CSD). Similarly, the mutual-capacitance sensing method is known as CapSense Cross-point (CSX). The CSD and CSX touch sensing methods provide the industry's best-in-class signal-to-noise ratio (SNR), high touch sensitivity, low-power operation, and superior EMI performance.

CapSense touch sensing is a combination of hardware and firmware techniques. Therefore, use the CapSense component provided by the PSoC Creator IDE to implement CapSense designs. See the PSoC 4 and PSoC 6 MCU CapSense Design Guide for more details.

18. LCD Direct Drive

The PSoC® 4 Liquid Crystal Display (LCD) drive system is a highly configurable peripheral that allows the PSoC device to directly drive STN and TN segment LCDs.

18.1 Features

The PSoC 4 LCD segment drive block has the following features:

- Supports up to 28 segments and eight commons
- Supports Type A (standard) and Type B (low-power) drive waveforms
- Any GPIO can be configured as a common or segment
- Supports five drive methods:
  - Digital correlation
  - PWM at 1/2 bias
  - PWM at 1/3 bias
  - PWM at 1/4 bias
  - PWM at 1/5 bias
- Ability to drive 3-V displays from 1.8 V V_{DD} in Digital Correlation mode
- Operates in active, sleep, and deep-sleep modes
- Digital contrast control

18.2 LCD Segment Drive Overview

A segmented LCD panel has the liquid crystal material between two sets of electrodes and various polarization and reflector layers. The two electrodes of an individual segment are called commons (COM) or backplanes and segment electrodes (SEG). From an electrical perspective, an LCD segment can be considered as a capacitive load; the COM/SEG electrodes can be considered as the rows and columns in a matrix of segments. The opacity of an LCD segment is controlled by varying the root-mean-square (RMS) voltage across the corresponding COM/SEG pair.

The following terms/voltages are used in this chapter to describe LCD drive:

- **V_{RMSOFF}**: The voltage that the LCD driver can realize on segments that are intended to be off.
- **V_{RMSON}**: The voltage that the LCD driver can realize on segments that are intended to be on.
- **Discrimination Ratio (D)**: The ratio of V_{RMSON} and V_{RMSOFF} that the LCD driver can realize. This depends on the type of waveforms applied to the LCD panel. Higher discrimination ratio results in higher contrast.

Liquid crystal material does not tolerate long term exposure to DC voltage. Therefore, any waveforms applied to the panel must produce a 0-V DC component on every segment (on or off). Typically, LCD drivers apply waveforms to the COM and SEG electrodes that are generated by switching between multiple voltages. The following terms are used to define these waveforms:

- **Duty**: A driver is said to operate in 1/M duty when it drives 'M' number of COM electrodes. Each COM electrode is effectively driven 1/M of the time.
- **Bias**: A driver is said to use 1/B bias when its waveforms use voltage steps of (1/B) × VDRV. VDRV is the highest drive voltage in the system (equals to V_{DD} in PSoC 4). PSoC 4 supports 1/2, 1/3, 1/4, and 1/5 biases in PWM drive modes.
- **Frame**: A frame is the length of time required to drive all the segments. During a frame, the driver cycles through the commons in sequence. All segments receive 0-V DC (but non-zero RMS voltage) when measured over the entire frame.

PSoC 4 supports two different types of drive waveforms in all drive modes. These are:

- **Type-A Waveform**: In this type of waveform, the driver structures a frame into M sub-frames. 'M' is the number of COM electrodes. Each COM is addressed only once during a frame. For example, COM[i] is addressed in sub-frame i.
- **Type-B Waveform**: The driver structures a frame into 2M sub-frames. The two sub-frames are inverses of each other. Each COM is addressed twice during a frame. For example, COM[i] is addressed in sub-frames i and M+i. Type-B waveforms are slightly more power efficient because it contains fewer transitions per frame.

18.2.1 Drive Modes

PSoC 4 supports the following drive modes.

- PWM drive at 1/2 bias
- PWM drive at 1/3 bias
- PWM drive at 1/4 bias with high-frequency clock input
- PWM drive at 1/5 bias with high-frequency clock input
- Digital correlation

18.2.1.1 PWM Drive

In PWM drive mode, multi-voltage drive signals are generated using a PWM output signal together with the intrinsic resistance and capacitance of the LCD. Figure 18-1 illustrates this.

Figure 18-1. PWM Drive (at 1/3 Bias)

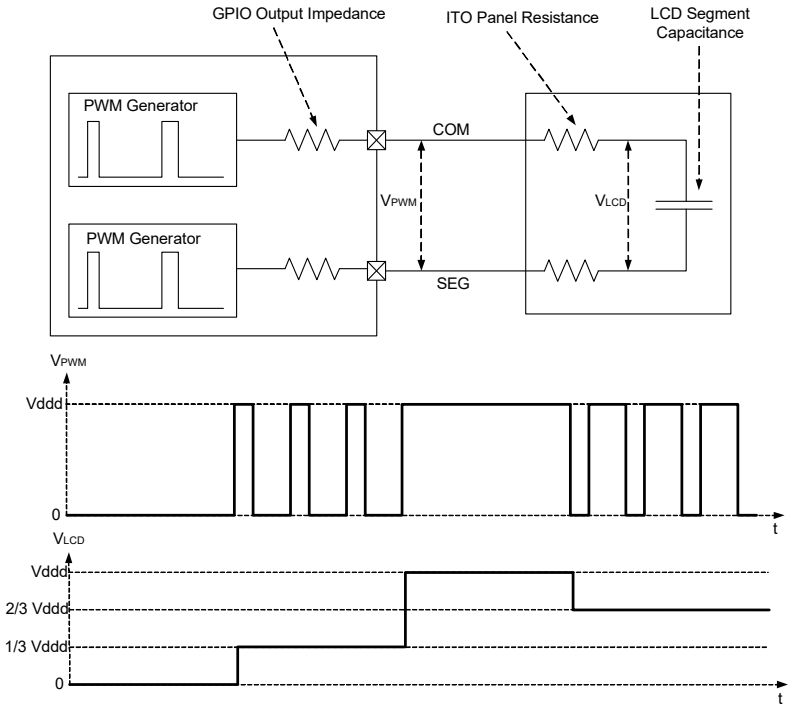

The output waveform of the drive electronics is a PWM waveform. With the Indium Tin Oxide (ITO) panel resistance and the segment capacitance to filter the PWM, the voltage across the LCD segment is an analog voltage, as shown in Figure 18-1. This figure illustrates the generation of a 1/3 bias waveform (four commons and voltage steps of $V_{DD}/3$).

The PWM is derived from either ILO (32 kHz, low-speed operation) or IMO (high-speed operation). The generated analog voltage typically runs at very low frequency (~ 50 Hz) for segment LCD driving.

Figure 18-2 and Figure 18-3 illustrate the Type A and Type B waveforms for COM and SEG electrodes for 1/2 bias and 1/4 duty. Only COM0/COM1 and SEG0/SEG1 are drawn for demonstration purpose. Similarly, Figure 18-4 and Figure 18-5 illustrate the Type A and Type B waveforms for COM and SEG electrodes for 1/3 bias and 1/4 duty.

Figure 18-2. PWM1/2 Type-A Waveform Example

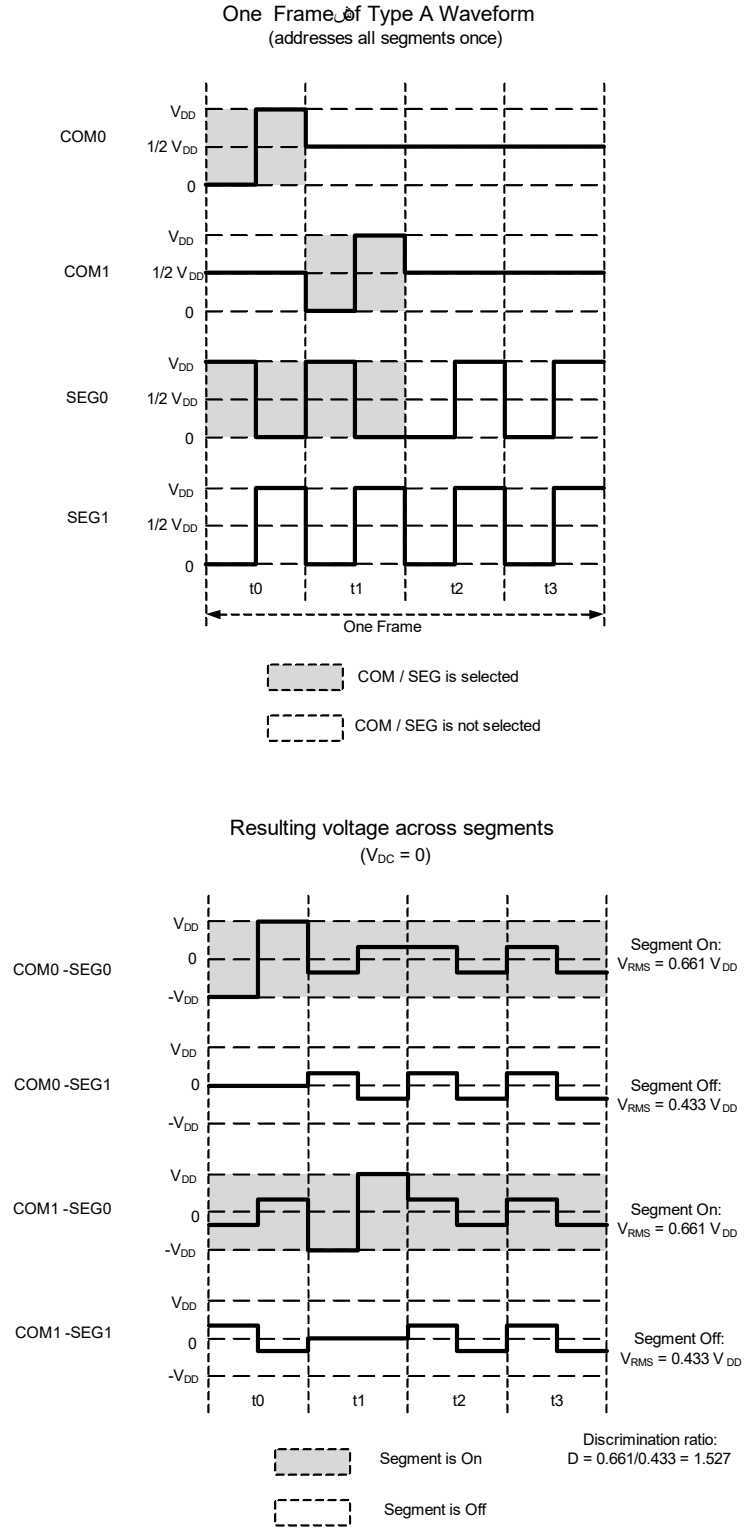

Figure 18-3. PWM1/2 Type-B Waveform Example

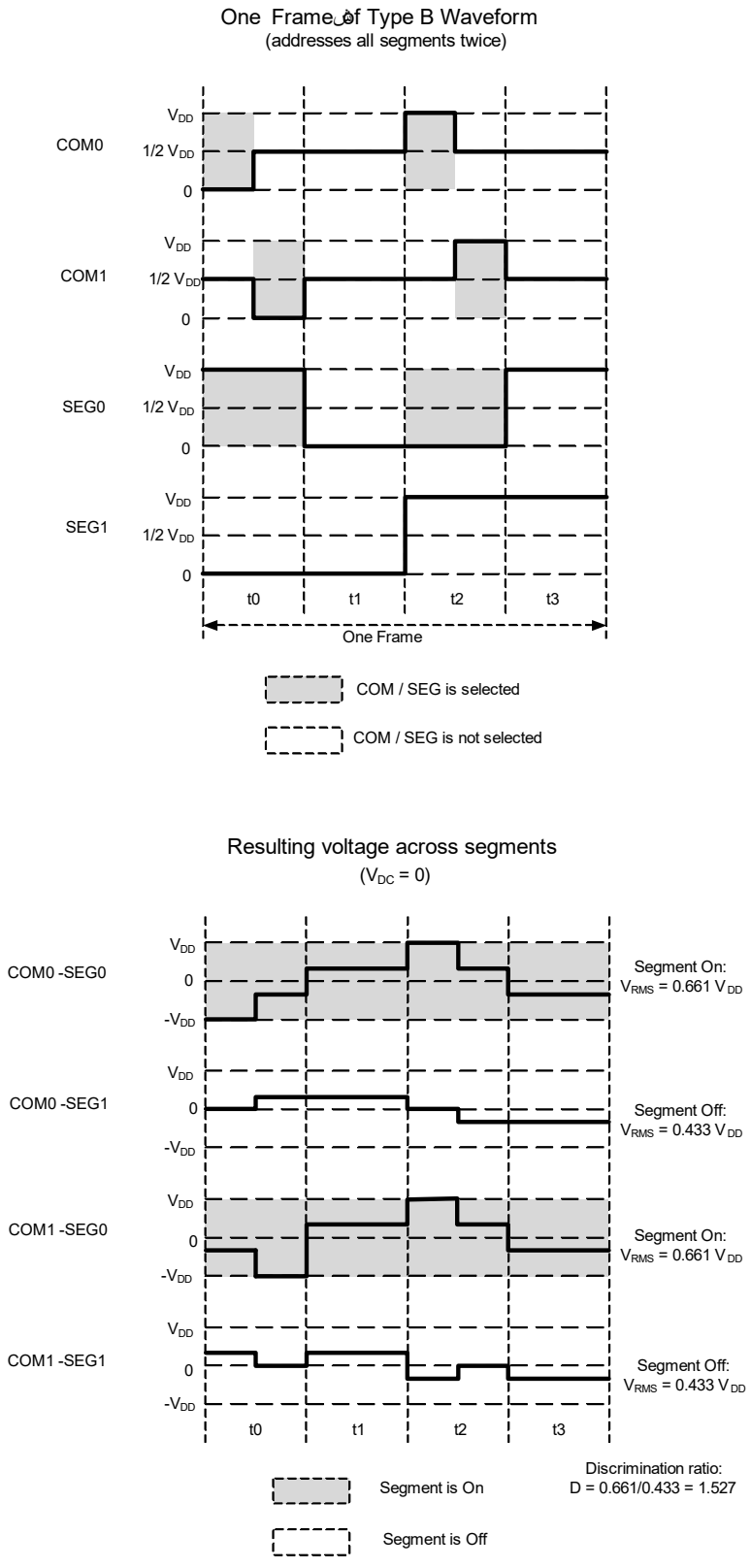

Figure 18-4. PWM1/3 Type-A Waveform Example

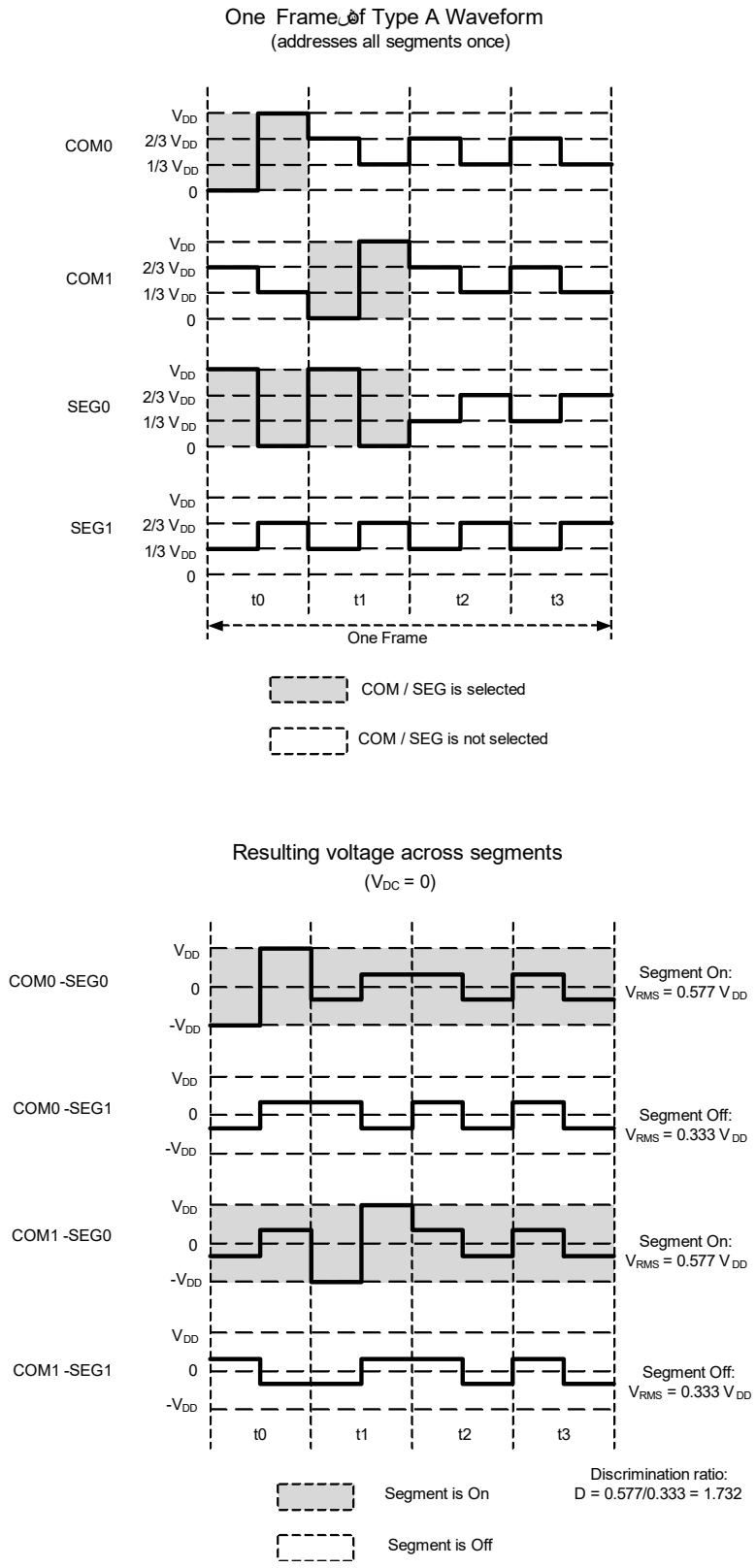

Figure 18-5. PWM1/3 Type-B Waveform Example

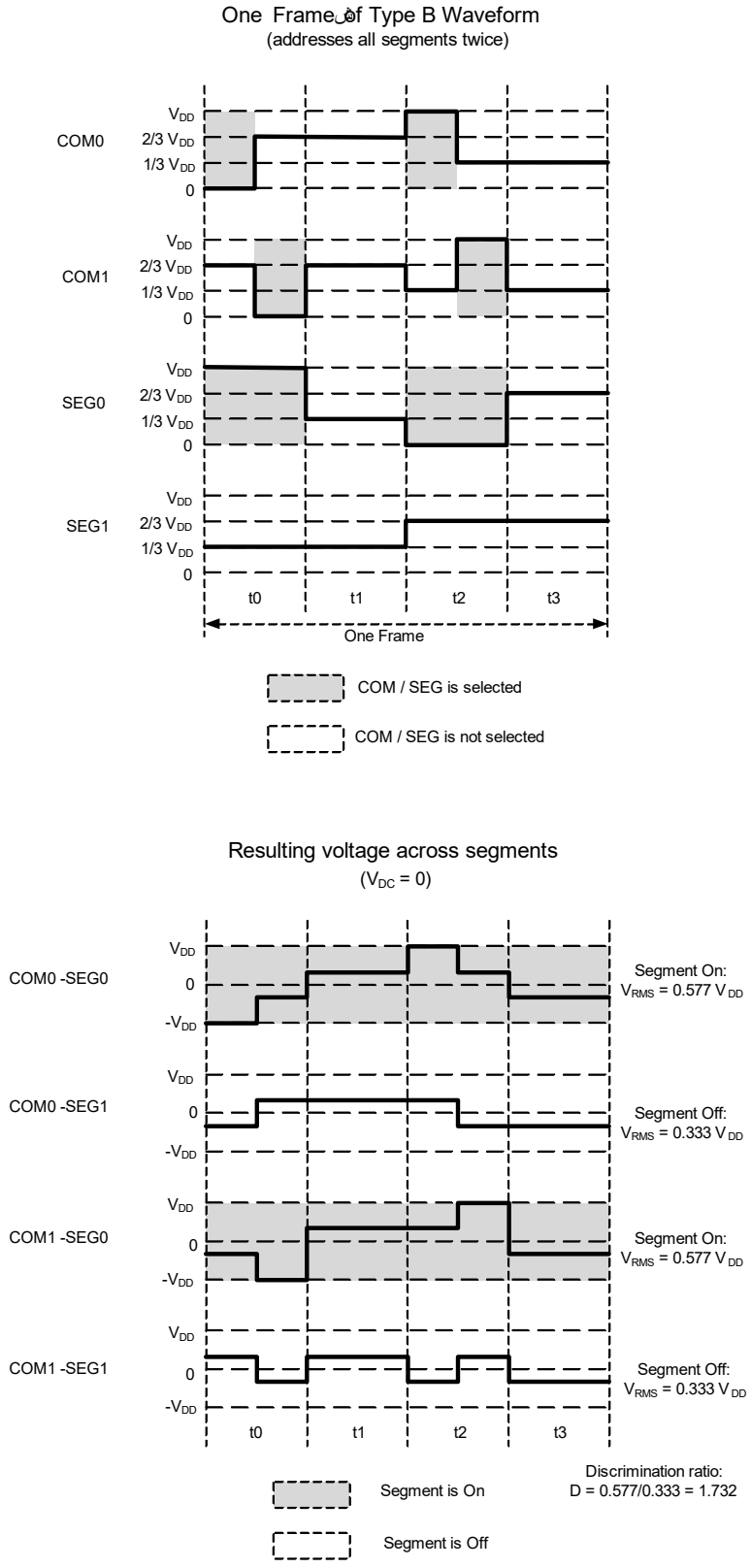

The effective RMS voltage for ON and OFF segments can be calculated easily using these equations:

$$V_{RMS(OFF)} = \sqrt{\frac{2(B-2)^2 + 2(M-1)}{2M}} x\left(\frac{V_{DRV}}{B}\right)$$

Equation 18-1

$$V_{RMS(ON)} = \sqrt{\frac{2B^2 + 2(M-1)}{2M}} x\left(\frac{V_{DRV}}{B}\right)$$

Equation 18-2

Where B is the bias and M is the duty (number of COMs).

For example, if the number of COMs is four, the resulting discrimination ratios (D) for 1/2 and 1/3 biases are 1.528 and 1.732, respectively. 1/3 bias offers better discrimination ratio in two and three COM drives also. Therefore, 1/3 bias offers better contrast than 1/2 bias and is recommended for most applications. 1/4 and 1/5 biases are available only in high-speed operation of the LCD. They offer better discrimination ratio especially when used with high COM designs (more than four COMs).

When the low-speed operation of LCD is used, the PWM signal is derived from the ILO. To drive a low-capacitance display with acceptable ripple and rise/fall times using a 32-kHz PWM, additional external series resistances of 100 k-1 MΩ should be used. External resistors are not required for PWM frequencies greater than ~1 MHz. The ideal PWM frequency depends on the capacitance of the display and the internal ITO resistance of the ITO routing traces.

The 1/2 bias mode has the advantage that PWM is only required on the COM signals; the SEG signals use only logic levels, as shown in Figure 18-2 and Figure 18-3.

18.2.1.2 Digital Correlation

The digital correlation mode, instead of generating bias voltages between the rails, takes advantage of the characteristic of LCDs that the contrast of LCD segments is determined by the RMS voltage across the segments. In this approach, the correlation coefficient between any given pair of COM and SEG signals determines whether the corresponding LCD segment is on or off. Thus, by doubling the base drive frequency of the COM signals in their inactive sub-frame intervals, the phase relationship of the COM and SEG drive signals can be varied to turn segments on and off. This is different from varying the DC levels of the signals as in the PWM drive approach. Figure 18-8 and Figure 18-9 are example waveforms that illustrate the principles of operation.

Figure 18-6. Digital Correlation Type-A Waveform

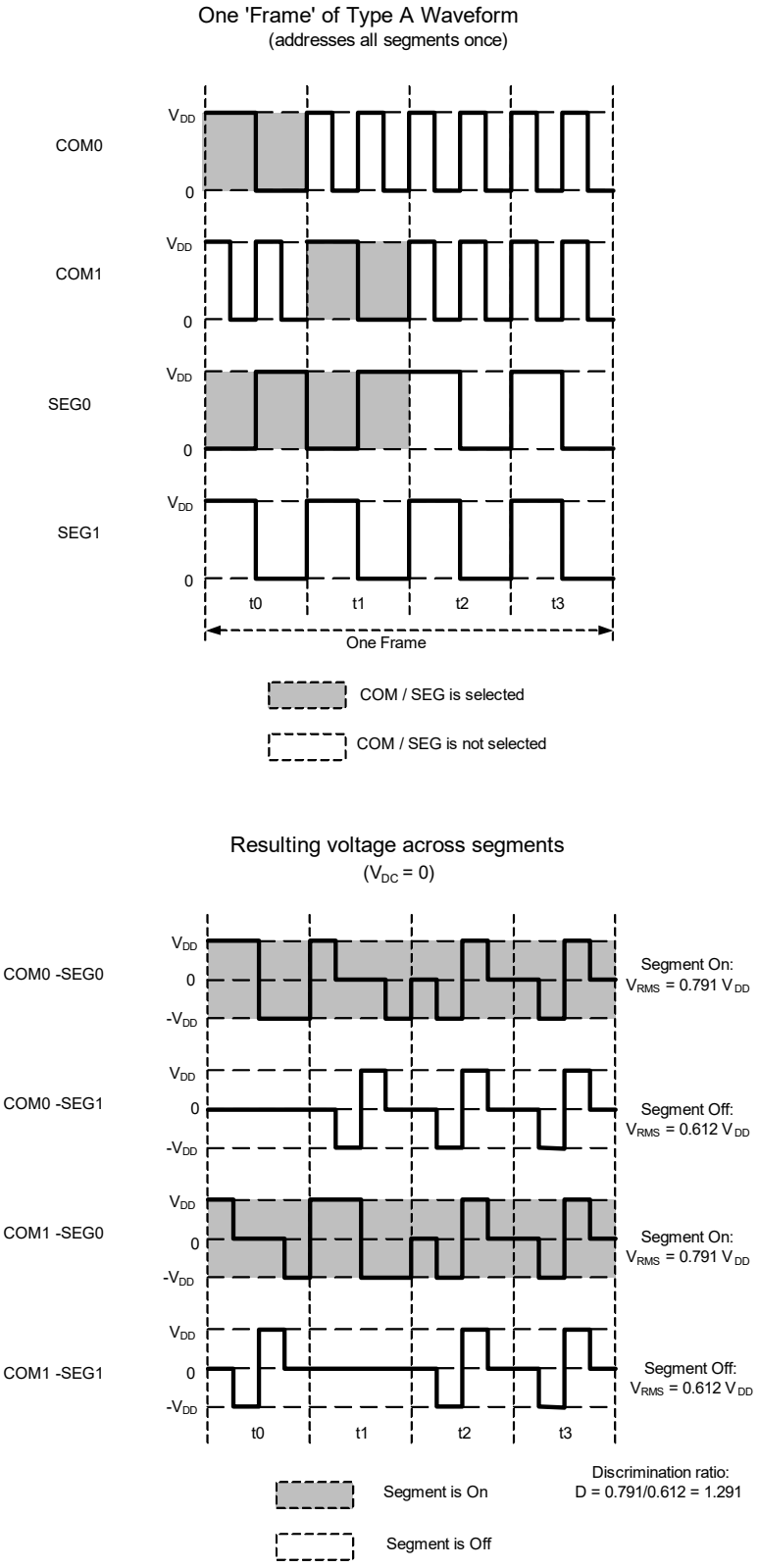

Figure 18-7. Digital Correlation Type-B Waveform

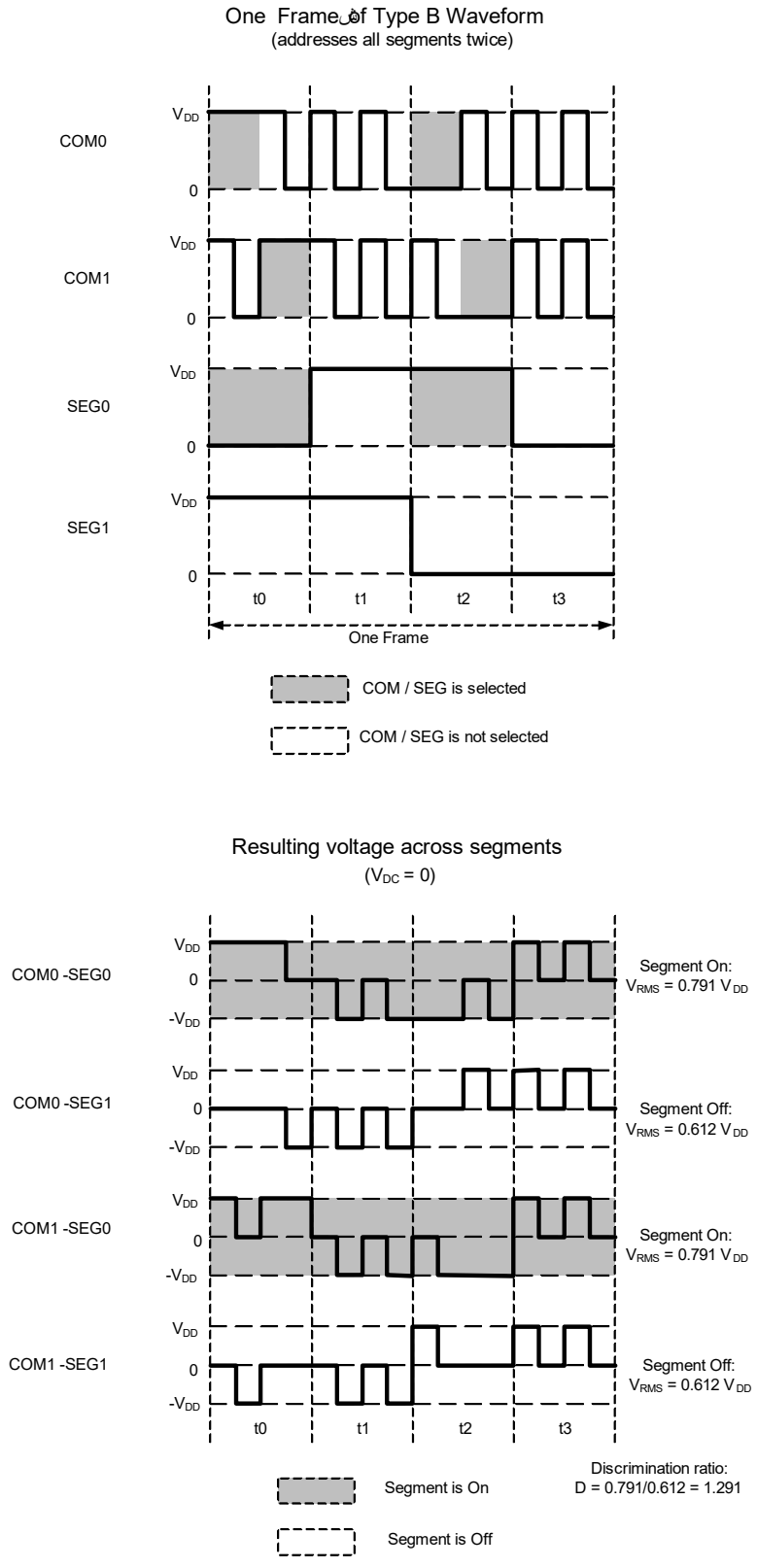

The RMS voltage applied to on and off segments can be calculated as follows:

$$V_{RMS(OFF)} = \sqrt{\frac{(M-1)}{2M}} x(V_{DD})$$

$$V_{RMS(ON)} = \sqrt{\frac{2+(M-1)}{2M}} x(V_{DD})$$

Where B is the bias and M is the duty (number of COMs). This leads to a discrimination ratio (D) of 1.291 for four COMs. Digital correlation mode also has the ability to drive 3-V displays from 1.8-V V_{DD}.

18.2.2 Recommended Usage of Drive Modes

The PWM drive mode has higher discrimination ratios compared to the digital correlation mode, as explained in 18.2.1.1 PWM Drive and 18.2.1.2 Digital Correlation. Therefore, the contrast in digital correlation method is lower than PWM method but digital correlation has lower power consumption because its waveforms toggle at low frequencies.

The digital correlation mode creates reduced, but acceptable contrast on TN displays, but no noticeable difference in contrast or viewing angle on higher contrast STN displays. Because each mode has strengths and weaknesses, recommended usage is as follows.

Table 18-1. Recommended Usage of Drive Modes

Display Type	Deep-Sleep Mode	Sleep/Active Mode	Notes
Four COM TN Glass	Digital correlation	PWM 1/3 bias	Firmware must switch between LCD drive modes before going to deep sleep or waking up.
Four COM STN Glass	Digital correlation		No contrast advantage for PWM drive with STN glass.
Eight COM, STN	Not supported	PWM 1/4 bias and 1/5 bias	Supported only in the high-speed LCD mode. The low-speed clock is not fast enough to make the PWM work at high multiplex ratios.

18.2.3 Digital Contrast Control

In all drive modes, digital contrast control can be used to change the contrast level of the segments. This method reduces contrast by reducing the driving time of the segments. This is done by inserting a 'Dead-Time' interval after each frame. During dead time, all COM and SEG signals are driven to a logic 1 state. The dead time can be controlled in fine resolution. Figure 18-8 illustrates the dead-time contrast control method for 1/3 bias and 1/4 duty implementation.

Figure 18-8. Dead-Time' Contrast Control

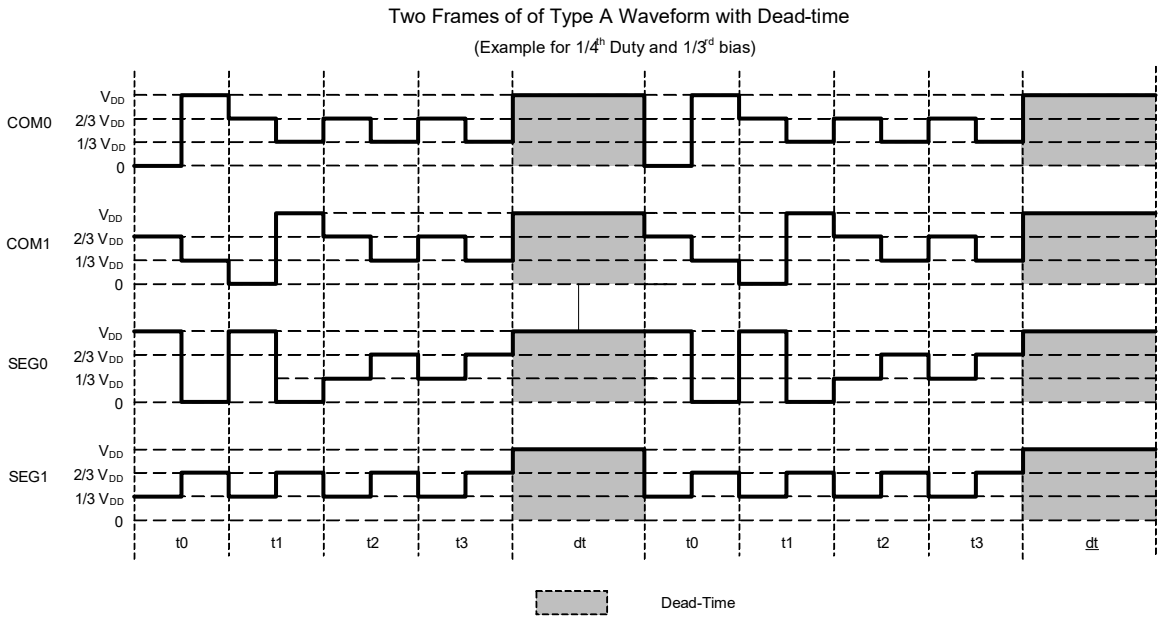

18.3 Block Diagram

Figure 18-9. Block Diagram of LCD Direct Drive System

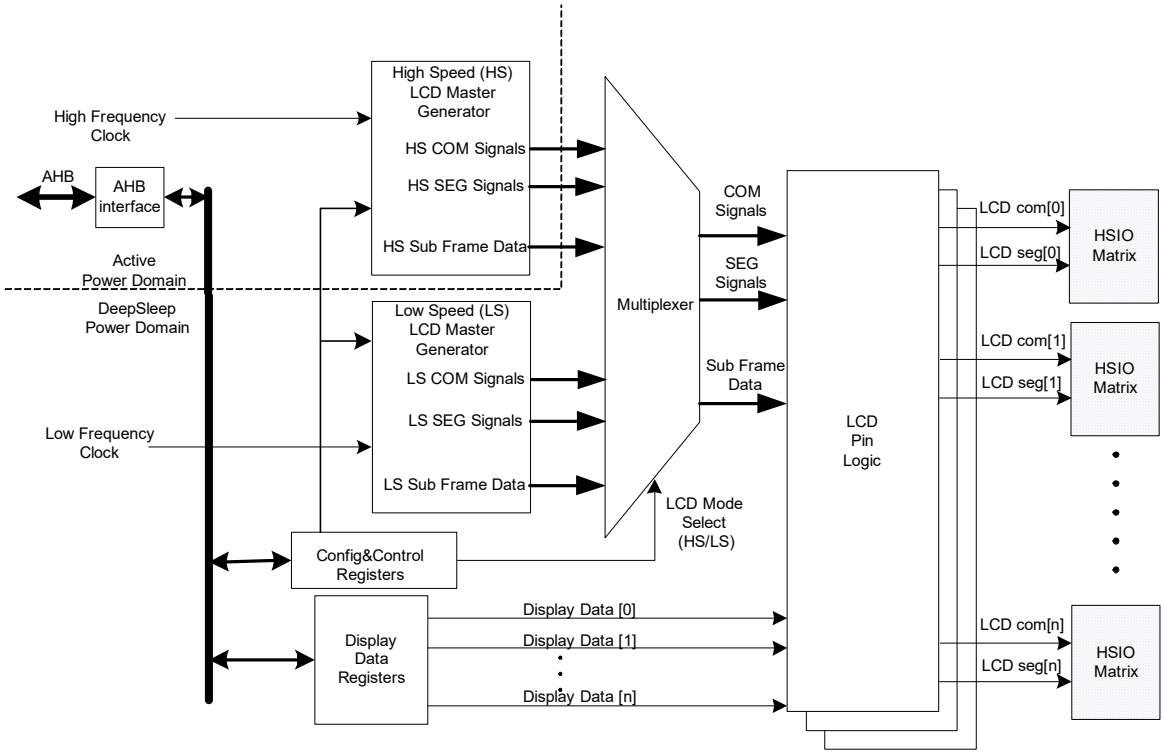

18.3.1 How it Works

The LCD controller block contains two generators; one with a high-speed clock source HFCLK and the other with a low-speed clock source derived from the ILO. These are called high-speed LCD master generator and low-speed LCD master generator, respectively. Both the generators support PWM and digital correlation drive modes. PWM drive mode with low-speed generator requires external resistors, as explained in PWM Drive on page 154.

The multiplexer selects one of these two generator outputs to drive LCD, as configured by the firmware. The LCD pin logic block routes the COM and SEG outputs from the generators to the corresponding I/O matrices. Any GPIO can be used as either COM or SEG. This configurable pin assignment for COM or SEG is implemented in GPIO and I/O matrix; see High-Speed I/O Matrix on page 41. These two generators share the same configuration registers. These memory mapped I/O registers are connected to the system bus (AHB) using an AHB interface.

The LCD controller works in three device power modes: active, sleep, and deep-sleep. High-speed operation is supported in active and sleep modes. Low-speed operation is supported in active, sleep, and deep-sleep modes. The LCD controller is unpowered in hibernate and stop modes.

18.3.2 High-Speed and Low-Speed Master Generators

The high-speed and low-speed master generators are similar to each other. The only exception is that the high-speed version has larger frequency dividers to generate the frame and sub-frame periods. This is because the clock of the high-speed block (HFCLK) is derived from the IMO, which is typically at 30 to 100 times the frequency of the ILO clock fed to the low-speed block. The high-speed generator is in the active power domain and the low-speed generator is in the deep-sleep power domain. A single set of configuration registers is provided to control both high-speed and low-speed blocks. Each master generator has the following features and characteristics:

- Register bit configuring the block for either Type A or Type B drive waveforms (LCD_MODE bit in LCD_CONTROL register).
- Register bits to select the number of COMs (COM_NUM field in LCD_CONTROL register). The available values are 2, 3, and 4.
- Operating mode configuration bits enabled to select one of the following:
  - Digital correlation
  - PWM 1/2 bias

- PWM 1/3 bias
- PWM 1/4 bias (not supported in low-speed generator)
- PWM 1/5 bias (not supported in low-speed generator)
- Off/disabled. Typically, one of the two generators will be configured to be Off

OP_MODE and BIAS fields in LCD_CONTROL bits select the drive mode.

- A counter to generate the sub-frame timing. The SUBFR_DIV field in the LCD_DIVIDER register determines the duration of each sub-frame. If the divide value written into this counter is C, the sub-frame period is 4 × (C+1). The low-speed generator has an 8-bit counter. This counter generates a maximum half sub-frame period of 8 ms from the ILO clock. The high-speed generator has a 16-bit counter.
- A counter to generate the dead time period. These counters have the same number of bits as the sub-frame period counters and use the same clocks. DEAD_DIV field in the LCD_DIVIDER register controls the dead time period.

18.3.3 Multiplexer and LCD Pin Logic

The multiplexer selects the output signals of either high-speed or low-speed master generator blocks and feeds it to the LCD pin logic. This selection is controlled by the configuration and control register. The LCD pin logic uses the sub-frame signal from the multiplexer to choose the display data. This pin logic will be replicated for each LCD pin.

18.3.4 Display Data Registers

Each LCD segment pin is part of an LCD port with its own display data register, LCD_DATAnx. The device has eight such LCD ports. Note that these ports are not real pin ports but the ports/connections available in the LCD hardware for mapping the segments to commons. Each LCD segment configured is considered as a pin in these LCD ports. The LCD_DATAnx registers are 32-bit wide and store the ON/OFF data for all SEG-COM combination enabled in the design. LCD_DATA0x holds SEG-COM data for COM0 to COM3 and LCD_DATA1x holds SEG-COM data for COM4 to COM7. The bits [4i+3:4i] (where 'i' is the pin number) of each LCD_DATA0x register represent the ON/OFF data for Pin[i] in Port[x] and COM[3,2,1,0] combinations, as shown in Table 18-2. The LCD_DATAnx register should be programmed according to the display data of each frame. The display data registers are Memory Mapped I/O (MMIO) and accessed through the AHB slave interface.

Table 18-2. SEG-COM Mapping in LCD_DATA0x Registers (each SEG is a pin of the LCD port)

BITS[31:28] = PIN_7[3:0]				BITS[27:24] = PIN_6[3:0]			
PIN_7-COM3	PIN_7-COM2	PIN_7-COM1	PIN_7-COM0	PIN_6-COM3	PIN_6-COM2	PIN_6-COM1	PIN_6-COM0
BITS[23:20] = PIN_5[3:0]				**BITS[19:16] = PIN_4[3:0]**			
PIN_5-COM3	PIN_5-COM2	PIN_5-COM1	PIN_5-COM0	PIN_4-COM3	PIN_4-COM2	PIN_4-COM1	PIN_4-COM0
BITS[15:12] = PIN_3[3:0]				**BITS[11:8] = PIN_2[3:0]**			
PIN_3-COM3	PIN_3-COM2	PIN_3-COM1	PIN_3-COM0	PIN_2-COM3	PIN_2-COM2	PIN_2-COM1	PIN_2-COM0
BITS[7:3] = PIN_1[3:0]				**BITS[3:0] = PIN_0[3:0]**			
PIN_1-COM3	PIN_1-COM2	PIN_1-COM1	PIN_1-COM0	PIN_0-COM3	PIN_0-COM2	PIN_0-COM1	PIN_0-COM0

18.4 Register List

Table 18-3. LCD Direct Drive Register List

Register Name	Description
LCD_ID	This register includes the information of LCD controller' ID and revision number
LCD_DIVIDER	This register controls the sub-frame and dead-time period
LCD_CONTROL	This register is used to configure high-speed and low-speed generators
LCD_DATA0x	LCD port pin data register for COM0 to COM3; x = port number, eight ports are available
LCD_DATA1x	LCD port pin data register for COM4 to COM7; x = port number, eight ports are available

Section F: Program and Debug

This section encompasses the following chapters:

- Program and Debug Interface chapter on page 166
- Nonvolatile Memory Programming chapter on page 173

Top Level Architecture

Program and Debug Block Diagram

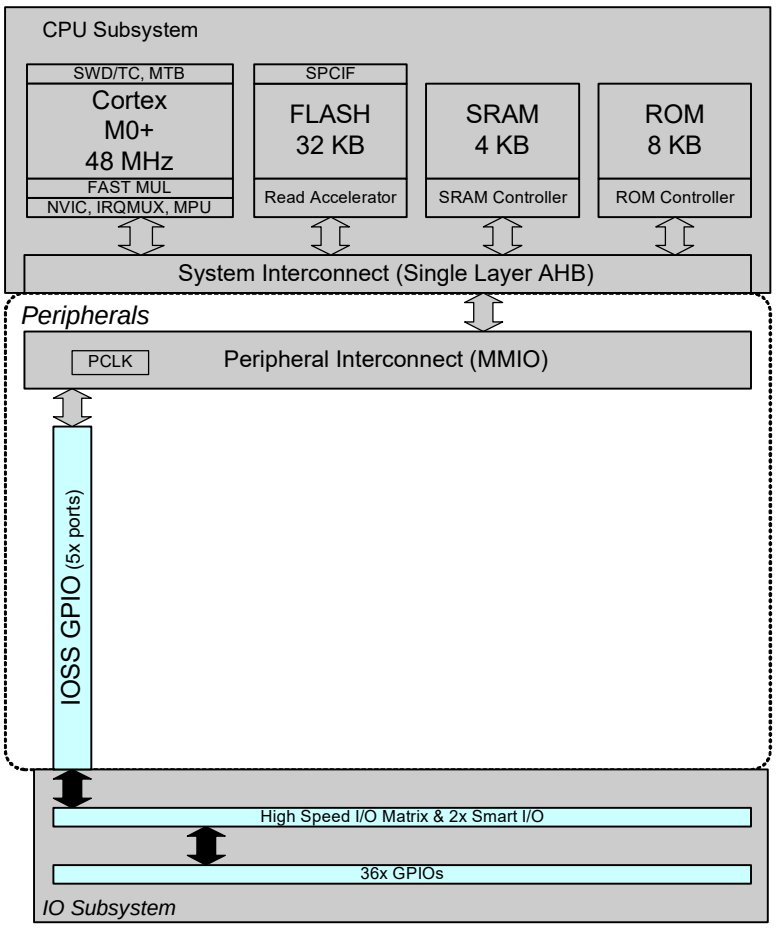

19. Program and Debug Interface

The PSoC® 4 Program and Debug interface provides a communication gateway for an external device to perform programming or debugging. The external device can be a Cypress-supplied programmer and debugger, or a third-party device that supports programming and debugging. The serial wire debug (SWD) interface is used as the communication protocol between the external device and PSoC 4.

19.1 Features

- Programming and debugging through the SWD interface
- Four hardware breakpoints and two hardware watchpoints while debugging
- Read and write access to all memory and registers in the system while debugging, including the Cortex-M0+ register bank when the core is running or halted

19.2 Functional Description

Figure 19-1 shows the block diagram of the program and debug interface in PSoC 4. The Cortex-M0+ debug and access port (DAP) acts as the program and debug interface. The external programmer or debugger, also known as the “host”, communicates with the DAP of the PSoC 4 “target” using the two pins of the SWD interface - the bidirectional data pin (SWDIO) and the host-driven clock pin (SWDCK). The SWD physical port pins (SWDIO and SWDCK) communicate with the DAP through the high-speed I/O matrix (HSIOM). See the I/O System chapter on page 36 for details on HSIOM.

Figure 19-1. Program and Debug Interface

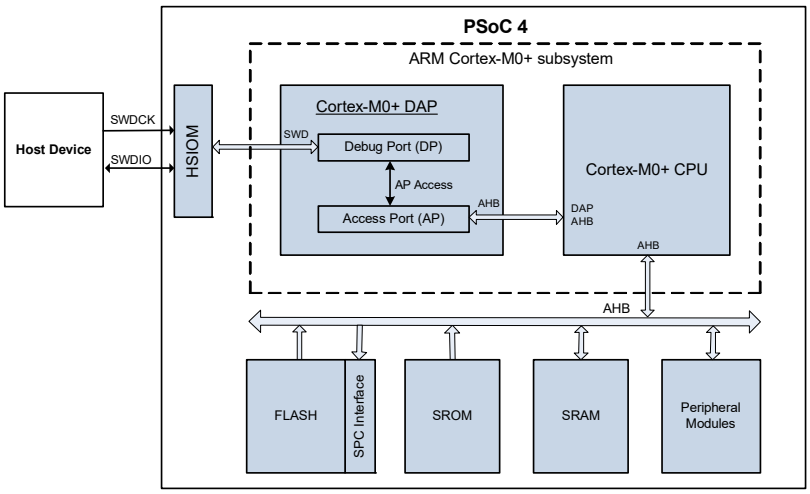

The DAP communicates with the Cortex-M0+ CPU using the Arm-specified advanced high-performance bus (AHB) interface. AHB is the systems interconnect protocol used inside the device, which facilitates memory and peripheral register access by the AHB master. The device has two AHB masters – Arm CM0 CPU core and DAP. The external device can effectively take control of the entire device through the DAP to perform programming and debugging operations.

19.3 Serial Wire Debug (SWD) Interface

PSoC 4's Cortex-M0+ supports programming and debugging through the SWD interface. The SWD protocol is a packet-based serial transaction protocol. At the pin level, it uses a single bidirectional data signal (SWDIO) and a unidirectional clock signal (SWDCK). The host programmer always drives the clock line, whereas either the host or the target drives the data line. A complete data transfer (one SWD packet) requires 46 clocks and consists of three phases:

- **Host Packet Request Phase** – The host issues a request to the PSoC 4 target.
- **Target Acknowledge Response Phase** – The PSoC 4 target sends an acknowledgement to the host.
- **Data Transfer Phase** – The host or target writes data to the bus, depending on the direction of the transfer.

When control of the SWDIO line passes from the host to the target, or vice versa, there is a turnaround period (Trn) where neither device drives the line and it floats in a high-impedance (Hi-Z) state. This period is either one-half or one and a half clock cycles, depending on the transition.

Figure 19-2 shows the timing diagrams of read and write SWD packets.

Figure 19-2. SWD Write and Read Packet Timing Diagrams

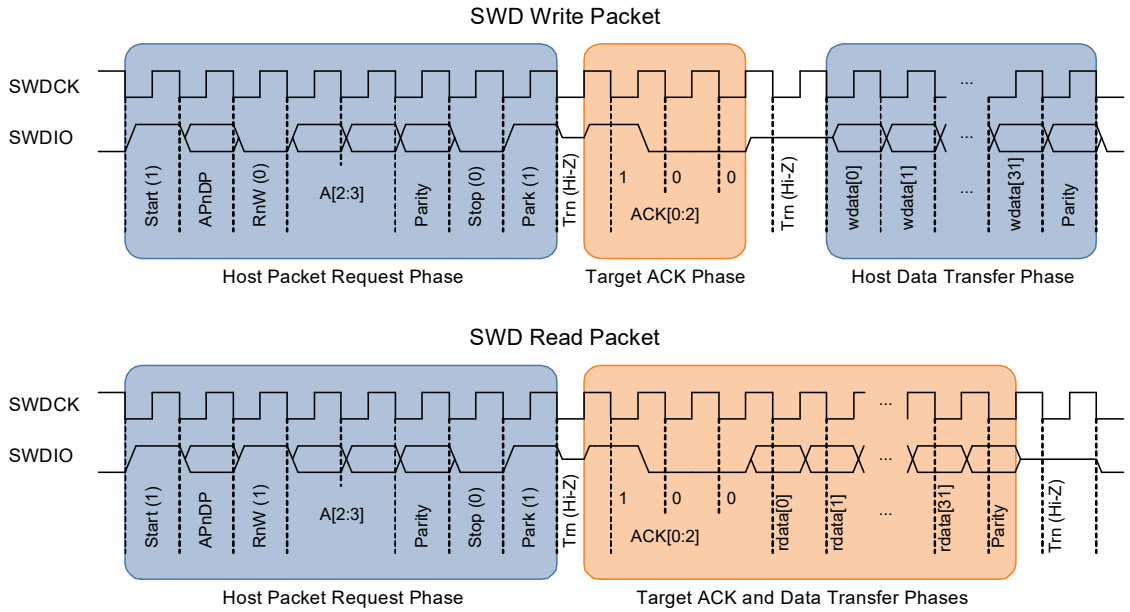

The sequence to transmit SWD read and write packets are as follows:

1. Host Packet Request Phase: SWDIO driven by the host
   a. The start bit initiates a transfer; it is always logic 1.
   b. The "AP not DP" (APnDP) bit determines whether the transfer is an AP access – 1b1 or a DP access – 1b0.
   c. The "Read not Write" bit (RnW) controls which direction the data transfer is in. 1b1 represents a 'read from' the target, or 1b0 for a 'write to' the target.
   d. The Address bits (A[3:2]) are register select bits for AP or DP, depending on the APnDP bit value. See Table 19-3 and Table 19-4 for definitions.
   Note Address bits are transmitted with the LSB first.
   e. The parity bit contains the parity of APnDP, RnW, and ADDR bits. It is an even parity bit; this means, when XORed with the other bits, the result will be 0.
   If the parity bit is not correct, the header is ignored by PSoC 4; there is no ACK response (ACK = 3b111). The programming operation should be aborted and retried again by following a device reset.
   f. The stop bit is always logic 0.
   g. The park bit is always logic 1.
2. Target Acknowledge Response Phase: SWDIO driven by the target
   a. The ACK[2:0] bits represent the target to host response, indicating failure or success, among other results. See Table 19-1 for definitions.
   Note ACK bits are transmitted with the LSB first.
3. Data Transfer Phase: SWDIO driven by either target or host depending on direction
   a. The data for read or write is written to the bus, LSB first.

b. The data parity bit indicates the parity of the data read or written. It is an even parity; this means when XORed with the data bits, the result will be 0.

   If the parity bit indicates a data error, corrective action should be taken. For a read packet, if the host detects a parity error, it must abort the programming operation and restart. For a write packet, if the target detects a parity error, it generates a FAULT ACK response in the next packet.

According to the SWD protocol, the host can generate any number of SWDCK clock cycles between two packets with SWDIO low. It is recommended to generate three or more dummy clock cycles between two SWD packets if the clock is not free-running or to make the clock free-running in IDLE mode.

The SWD interface can be reset by clocking the SWDCK line for 50 or more cycles with SWDIO high. To return to the idle state, clock the SWDIO low once.

19.3.1 SWD Timing Details

The SWDIO line is written to and read at different times depending on the direction of communication. The host drives the SWDIO line during the Host Packet Request Phase and, if the host is writing data to the target, during the Data Transfer phase as well. When the host is driving the SWDIO line, each new bit is written by the host on falling SWDCK edges, and read by the target on rising SWDCK edges. The target drives the SWDIO line during the Target Acknowledge Response Phase and, if the target is reading out data, during the Data Transfer Phase as well. When the target is driving the SWDIO line, each new bit is written by the target on rising SWDCK edges, and read by the host on falling SWDCK edges.

Table 19-1 and Figure 19-2 illustrate the timing of SWDIO bit writes and reads.

Table 19-1. SWDIO Bit Write and Read Timing

SWD Packet Phase	SWDIO Edge	
	Falling	Rising
Host Packet Request	Host Write	Target Read
Host Data Transfer		
Target Ack Response	Host Read	Target Write
Target Data Transfer		

19.3.2 ACK Details

The acknowledge (ACK) bit-field is used to communicate the status of the previous transfer. OK ACK means that previous packet was successful. A WAIT response requires a data phase. For a FAULT status, the programming operation should be aborted immediately. Table 19-2 shows the ACK bit-field decoding details.

Table 19-2. SWD Transfer ACK Response Decoding

Response	ACK[2:0]
OK	3b001
WAIT	3b010
FAULT	3b100
NO ACK	3b111

Details on WAIT and FAULT response behaviors are as follows:

- For a WAIT response, if the transaction is a read, the host should ignore the data read in the data phase. The target does not drive the line and the host must not check the parity bit as well.
- For a WAIT response, if the transaction is a write, the data phase is ignored by the PSoC 4. But, the host must still send the data to be written to complete the packet. The parity bit corresponding to the data should also be sent by the host.
- For a WAIT response, it means that the PSoC 4 is processing the previous transaction. The host can try for a maximum of four continuous WAIT responses to see if an OK response is received. If it fails, then the programming operation should be aborted and retried again.
- For a FAULT response, the programming operation should be aborted and retried again by doing a device reset.

19.3.3 Turnaround (Trn) Period Details

There is a turnaround period between the packet request and the ACK phases, as well as between the ACK and the data phases for host write transfers, as shown in Figure 19-2. According to the SWD protocol, the Trn period is used by both the host and target to change the drive modes on their respective SWDIO lines. During the first Trn period after the packet request, the target starts driving the ACK data on the SWDIO line on the rising edge of SWDCK. This action ensures that the host can read the ACK data on the next falling edge. Thus, the first Trn period lasts only one-half cycle. The second Trn period of the SWD packet is one and a half cycles. Neither the host nor the PSoC 4 should drive the SWDIO line during the Trn period.

19.4 Cortex-M0+ Debug and Access Port (DAP)

The Cortex-M0+ program and debug interface includes a Debug Port (DP) and an Access Port (AP), which combine to form the DAP. The debug port implements the state machine for the SWD interface protocol that enables communication with the host device. It also includes registers for the configuration of access port, DAP identification code, and so on. The access port contains registers that enable the external device to access the Cortex-M0+ DAP-AHB interface. Typically, the DP registers are used for a one time configuration or for error detection purposes, and the AP registers are used to perform the programming and debugging operations. Complete architecture details of the DAP is available in the Arm® Debug Interface v5 Architecture Specification.

19.4.1 Debug Port (DP) Registers

Table 19-3 shows the Cortex-M0+ DP registers used for programming and debugging, along with the corresponding SWD address bit selections. The APnDP bit is always zero for DP register accesses. Two address bits (A[3:2]) are used for selecting among the different DP registers. Note that for the same address bits, different DP registers can be accessed depending on whether it is a read or a write operation. See the Arm® Debug Interface v5 Architecture Specification for details on all of the DP registers.

Table 19-3. Main Debug Port (DP) Registers

Register	APnDP	Address A[3:2]	RnW	Full Name	Register Functionality
ABORT	0 (DP)	2b00	0 (W)	AP Abort Register	This register is used to force a DAP abort and to clear the error and sticky flag conditions.
IDCODE	0 (DP)	2b00	1 (R)	Identification Code Register	This register holds the SWD ID of the Cortex-M0+ CPU, which is 0x0BC11477.
CTRL/STAT	0 (DP)	2b01	X (R/W)	Control and Status Register	This register allows control of the DP and contains status information about the DP.
SELECT	0 (DP)	2b10	0 (W)	AP Select Register	This register is used to select the current AP. In PSoC 4, there is only one AP, which interfaces with the DAP AHB.
RDBUFF	0 (DP)	2b11	1 (R)	Read Buffer Register	This register holds the result of the last AP read operation.

19.4.2 Access Port (AP) Registers

Table 19-4 lists the main Cortex-M0+ AP registers that are used for programming and debugging, along with the corresponding SWD address bit selections. The APnDP bit is always one for AP register accesses. Two address bits (A[3:2]) are used for selecting the different AP registers.

Table 19-4. Main Access Port (AP) Registers

Register	APnDP	Address A[3:2]	RnW	Full Name	Register Functionality
CSW	1 (AP)	2b00	X (R/W)	Control and Status Word Register (CSW)	This register configures and controls accesses through the memory access port to a connected memory system (which is the PSoC 4 Memory map)
TAR	1 (AP)	2b01	X (R/W)	Transfer Address Register	This register is used to specify the 32-bit memory address to be read from or written to
DRW	1 (AP)	2b11	X (R/W)	Data Read and Write Register	This register holds the 32-bit data read from or to be written to the address specified in the TAR register

19.5 Programming the PSoC 4 Device

PSoC 4 is programmed using the following sequence. Refer to the CY8C4xxx, CYBLxxxx Programming Specification for complete details on the programming algorithm, timing specifications, and hardware configuration required for programming.

1. Acquire the SWD port in PSoC 4.
2. Enter the programming mode.
3. Execute the device programming routines such as Silicon ID Check, Flash Programming, Flash Verification, and Checksum Verification.

19.5.1 SWD Port Acquisition

19.5.1.1 SWD Port Acquire Sequence

The first step in device programming is for the host to acquire the target's SWD port. The host first performs a device reset by asserting the external reset (XRES) pin. After removing the XRES signal, the host must send an SWD connect sequence for the device within the acquire window to connect to the SWD interface in the DAP. The pseudo code for the sequence is given here.

Code 1. SWD Port Acquire Pseudo Code

```
ToggleXRES(); // Toggle XRES pin to reset
device

//Execute Arm's connection sequence to
acquire SWD-port
do
{
       SWD_LineReset(); //perform a line reset
(50+ SWDCK clocks with SWDIO high)
       ack = Read_DAP ( IDCODE, out ID); //Read
the IDCODE DP register

}while ((ack != OK) && time_elapsed < ms); //
retry connection until OK ACK or timeout

if (time_elapsed >= ms) return FAIL; //check for
acquire time out

if (ID != CM0P_ID) return FAIL; //confirm SWD
ID of Cortex-M0+ CPU. (0x0BC11477)
```

In this pseudo code, SWD_LineReset() is the standard Arm command to reset the debug access port. It consists of more than 49 SWDCK clock cycles with SWDIO high. The transaction must be completed by sending at least one SWDCK clock cycle with SWDIO asserted LOW. This sequence synchronizes the programmer and the chip. Read_DAP() refers to the read of the IDCODE register in the debug port. The sequence of line reset and IDCODE read should be repeated until an OK ACK is received for the IDCODE read or a timeout (ms) occurs. The SWD port is said to be in the acquired state if an OK ACK is received within the time window and the IDCODE read matches with that of the Cortex-M0+ DAP.

19.5.2 SWD Programming Mode Entry

After the SWD port is acquired, the host must enter the device programming mode within a specific time window. This is done by setting the TEST_MODE bit (bit 31) in the test mode control register (MODE register). The debug port should also be configured before entering the device programming mode. Timing specifications and pseudo code for entering the programming mode are detailed in the CY8C4xxx, CYBLxxxx Programming Specification document. The minimum required clock frequency for the Port Acquire step and this step to succeed is 1.5 MHz.

19.5.3 SWD Programming Routines Executions

When the device is in programming mode, the external programmer can start sending the SWD packet sequence for performing programming operations such as flash erase, flash program, checksum verification, and so on. The programming routines are explained in the Nonvolatile Memory Programming chapter on page 173. The exact sequence of calling the programming routines is given in the CY8C4xxx, CYBLxxxx Programming Specification.

19.6 PSoC 4 SWD Debug Interface

Cortex-M0+ DAP debugging features are classified into two types: invasive debugging and noninvasive debugging. Invasive debugging includes program halting and stepping, breakpoints, and data watchpoints. Noninvasive debugging includes instruction address profiling and device memory access, which includes the flash memory, SRAM, and other peripheral registers.

The DAP has three major debug subsystems:

- Debug Control and Configuration registers
- Breakpoint Unit (BPU) – provides breakpoint support
- Debug Watchpoint (DWT) – provides watchpoint support. Trace is not supported in Cortex-M0+ Debug.

See the Armv6-M Architecture Reference Manual for complete details on the debug architecture.

19.6.1 Debug Control and Configuration Registers

The debug control and configuration registers are used to execute firmware debugging. The registers and their key functions are as follows. See the Armv6-M Architecture Reference Manual for complete bit level definitions of these registers.

- Debug Halting Control and Status Register (CM0P_DHCSR) – This register contains the control bits to enable debug, halt the CPU, and perform a single-step operation. It also includes status bits for the debug state of the processor.
- Debug Fault Status Register (CM0P_DFSR) – This register describes the reason a debug event has occurred and includes debug events, which are caused by a CPU halt, breakpoint event, or watchpoint event.
- Debug Core Register Selector Register (CM0P_DCRSR) – This register is used to select the general-purpose register in the Cortex-M0+ CPU to which a read or write operation must be performed by the external debugger.
- Debug Core Register Data Register (CM0P_DCRDR) – This register is used to store the data to write to or read from the register selected in the CM0P_DCRSR register.
- Debug Exception and Monitor Control Register (CM0P_DEMCR) – This register contains the enable bits for global debug watchpoint (DWT) block enable, reset vector catch, and hard fault exception catch.

19.6.2 Breakpoint Unit (BPU)

The BPU provides breakpoint functionality on instruction fetches. The Cortex-M0+ DAP in PSoC 4 supports up to four hardware breakpoints. Along with the hardware breakpoints, any number of software breakpoints can be created by using the BKPT instruction in the Cortex-M0+. The BPU has two types of registers.

- The breakpoint control register (CM0P_BP_CTRL) is used to enable the BPU and store the number of hardware breakpoints supported by the debug system (four for CM0 DAP in the PSoC 4).
- Each hardware breakpoint has a Breakpoint Compare Register (CM0P_BP_COMPx). It contains the enable bit for the breakpoint, the compare address value, and the match condition that will trigger a breakpoint debug event. The typical use case is that when an instruction fetch address matches the compare address of a breakpoint, a breakpoint event is generated and the processor is halted.

19.6.3 Data Watchpoint (DWT)

The DWT provides watchpoint support on a data address access or a program counter (PC) instruction address. The DWT supports two watchpoints. It also provides external program counter sampling using a PC sample register, which can be used for noninvasive coarse profiling of the program counter. The most important registers in the DWT are as follows:

- The watchpoint compare (CM0P_DWT_COMPx) registers store the compare values that are used by the watchpoint comparator for the generation of watchpoint events. Each watchpoint has an associated DWT_COMPx register.
- The watchpoint mask (CM0P_DWT_MASKx) registers store the ignore masks applied to the address range matching in the associated watchpoints.
- The watchpoint function (CM0P_DWT_FUNCTIONx) registers store the conditions that trigger the watchpoint events. They may be program counter watchpoint event or data address read/write access watchpoint events. A status bit is also set when the associated watchpoint event has occurred.
- The watchpoint comparator PC sample register (CM0P_DWT_PCSR) stores the current value of the program counter. This register is used for coarse, non-invasive profiling of the program counter register.

19.6.4 Debugging the PSoC 4 Device

The host debugs the target PSoC 4 by accessing the debug control and configuration registers, registers in the BPU, and registers in the DWT. All registers are accessed through the SWD interface; the SWD debug port (SW-DP) in the Cortex-M0+ DAP converts the SWD packets to appropriate register access through the DAP-AHB interface.

The first step in debugging the target PSoC 4 is to acquire the SWD port. The acquire sequence consists of an SWD line reset sequence and read of the DAP SWDID through the SWD interface. The SWD port is acquired when the correct CM0 DAP SWDID is read from the target device. For the debug transactions to occur on the SWD interface, the corresponding pins should not be used for any other purpose. See the I/O System chapter on page 36 to understand how to configure the SWD port pins, allowing them to be used only for SWD interface or for other functions such as GPIO. If debugging is required, the SWD port pins should not be used for other purposes. If only programming support is needed, the SWD pins can be used for other purposes.

When the SWD port is acquired, the external debugger sets the C_DEBUGEN bit in the DHCSR register to enable debugging. Then, the different debugging operations such as stepping, halting, breakpoint configuration, and watchpoint configuration are carried out by writing to the appropriate registers in the debug system.

Debugging the target device is also affected by the overall device protection setting, which is explained in the Device Security chapter on page 76. Only the OPEN protected mode supports device debugging. The external debugger and the target device connection is not lost for a device transition from Active mode to either Sleep or Deep-Sleep modes. When the device enters the Active mode from either Deep-Sleep or Sleep modes, the debugger can resume its actions without initiating a connect sequence again.

19.7 Registers

Table 19-5. List of Registers

Register Name	Description
CM0P_DHCSR	Debug Halting Control and Status Register
CM0P_DFSR	Debug Fault Status Register
CM0P_DCRSR	Debug Core Register Selector Register
CM0P_DCRDR	Debug Core Register Data Register
CM0P_DEMCR	Debug Exception and Monitor Control Register
CM0P_BP_CTRL	Breakpoint control register
CM0P_BP_COMPx	Breakpoint Compare Register
CM0P_DWT_COMPx	Watchpoint Compare Register
CM0P_DWT_MASKx	Watchpoint Mask Register
CM0P_DWT_FUNCTIONx	Watchpoint Function Register
CM0P_DWT_PCSR	Watchpoint Comparator PC Sample Register

20. Nonvolatile Memory Programming

Nonvolatile memory programming refers to the programming of flash memory in the PSoC® 4 device. This chapter explains the different functions that are part of device programming, such as erase, write, program, and checksum calculation. Cypress-supplied programmers and other third-party programmers can use these functions to program the PSoC 4 device with the data in an application hex file. They can also be used to perform bootload operations where the CPU will update a portion of the flash memory.

20.1 Features

- Supports programming through the debug and access port (DAP) and Cortex-M0+ CPU
- Supports both blocking and non-blocking flash program and erase operations from the Cortex-M0+ CPU

20.2 Functional Description

Flash programming operations are implemented as system calls. System calls are executed out of SROM in the privileged mode of operation. The user has no access to read or modify the SROM code. The DAP or the CM0+ CPU requests the system call by writing the function opcode and parameters to the System Performance Controller Interface (SPCIF) input registers, and then requesting the SROM to execute the function. Based on the function opcode, the System Performance Controller (SPC) executes the corresponding system call from SROM and updates the SPCIF status register. The DAP or the CPU should read this status register for the pass/fail result of the function execution. As part of function execution, the code in SROM interacts with the SPCIF to do the actual flash programming operations.

PSoC 4 flash is programmed using a Program Erase Program (PEP) sequence. The flash cells are all programmed to a known state, erased, and then the selected bits are programmed. This sequence increases the life of the flash by balancing the stored charge. When writing to flash the data is first copied to a page latch buffer. The flash write functions are then used to transfer this data to flash.

External programmers program the flash memory in PSoC 4 using the SWD protocol by sending the commands to the Debug and Access Port (DAP). The programming sequence for the PSoC 4 device with an external programmer is given in the CY8C4xxx, CYBLxxxx Programming Specification. Flash memory can also be programmed by the CM0+ CPU by accessing the relevant registers through the AHB interface. This type of programming is typically used to update a portion of the flash memory as part of a bootload operation, or other application requirements, such as updating a lookup table stored in the flash memory. All write operations to flash memory, whether from the DAP or from the CPU, are done through the SPCIF.

Note It can take as much as 20 milliseconds to write to flash. During this time, the device should not be reset, or unexpected changes may be made to portions of the flash. Reset sources (see the Reset System chapter on page 74) include XRES pin, software reset, and watchdog; make sure that these are not inadvertently activated. In addition, the low-voltage detect circuits should be configured to generate an interrupt instead of a reset.

20.3 System Call Implementation

A system call consists of the following items:

- Opcode: A unique 8-bit opcode
- Parameters: Two 8-bit parameters are mandatory for all system calls. These parameters are referred to as key1 and key2, and are defined as follows:

  key1 = 0xB6

  key2 = 0xD3 + Opcode

  The two keys are passed to ensure that the user system call is not initiated by mistake. If the key1 and key2 parameters are not correct, the SROM does not execute the function, and returns an error code. Apart from these two parameters, additional parameters may be required depending on the specific function being called.
- Return Values: Some system calls also return a value on completion of their execution, such as the silicon ID or a checksum.
- Completion Status: Each system call returns a 32-bit status that the CPU or DAP can read to verify success or determine the reason for failure.

20.4 Blocking and Non-Blocking System Calls

System call functions can be categorized as blocking or non-blocking based on the nature of their execution. Blocking system calls are those where the CPU cannot execute any other task in parallel other than the execution of the system call. When a blocking system call is called from a process, the CPU jumps to the code corresponding in SROM. When the execution is complete, the original thread execution resumes. Non-blocking system calls allow the CPU to execute some other code in parallel and communicate the completion of interim system call tasks to the CPU through an interrupt.

Non-blocking system calls are only used when the CPU initiates the system call. The DAP will only use system calls during the programming mode and the CPU is halted during this process.

The three non-blocking system calls are Non-Blocking Write Row, Non-Blocking Program Row, and Resume Non-Blocking, respectively. All other system calls are blocking.

Because the CPU cannot execute code from flash while doing an erase or program operation on the flash, the non-blocking system calls can only be called from a code executing out of SRAM. If the non-blocking functions are called from flash memory, the result is undefined and may return a bus error and trigger a hard fault when the flash fetch operation is being done.

The System Performance Controller (SPC) is the block that generates the properly sequenced high-voltage pulses required for erase and program operations of the flash memory. When a non-blocking function is called from SRAM, the SPC timer triggers its interrupt when each of the sub-operations in a write or program operation is complete. Call the Resume Non-Blocking function from the SPC interrupt service routine (ISR) to ensure that the subsequent steps in the system call are completed. Because the CPU can execute code only from the SRAM when a non-blocking write or program operation is being done, the SPC ISR should also be located in the SRAM. The SPC interrupt is triggered once in the case of a non-blocking program function or thrice in a non-blocking write operation. The Resume Non-Blocking function call done in the SPC ISR is called once in a non-blocking program operation and thrice in a non-blocking write operation.

The pseudo code for using a non-blocking write system call and executing user code out of SRAM is given later in this chapter.

20.4.1 Performing a System Call

The steps to initiate a system call are as follows:

1. Set up the function parameters: The two possible methods for preparing the function parameters (key1, key2, additional parameters) are:
   a. Write the function parameters to the CPUSS_SYSARG register: This method is used for functions that retrieve their parameters from the CPUSS_SYSARG register. The 32-bit CPUSS_SYSARG register must be written with the parameters in the sequence specified in the respective system call table.
   b. Write the function parameters to SRAM: This method is used for functions that retrieve their parameters from SRAM. The parameters should first be written in the specified sequence to consecutive SRAM locations. Then, the starting address of the SRAM, which is the address of the first parameter, should be written to the CPUSS_SYSARG register. This starting address should always be a word-aligned (32-bit) address. The system call uses this address to fetch the parameters.
2. Specify the system call using its opcode and initiating the system call: The 8-bit opcode should be written to the SYSCALL_COMMAND bits ([15:0]) in the CPUSS_SYSREQ register. The opcode is placed in the lower eight bits [7:0] and 0x00 be written to the upper eight bits [15:8]. To initiate the system call, set the SYSCALL_REQ bit (31) in the CPUSS_SYSREG register. Setting this bit triggers a non-maskable interrupt that jumps the CPU to the SROM code referenced by the opcode parameter.
3. Wait for the system call to finish executing: When the system call begins execution, it sets the PRIVILEGED bit in the CPUSS_SYSREQ register. This bit can be set only by the system call, not by the CPU or DAP. The DAP should poll the PRIVILEGED and SYSCALL_REQ bits in the CPUSS_SYSREG register continuously to check whether the system call is completed. Both these bits are cleared on completion of the system call. The maximum execution time is one second. If these two bits

are not cleared after one second, the operation should be considered a failure and aborted without executing the following steps. Note that unlike the DAP, the CPU application code cannot poll these bits during system call execution. This is because the CPU executes code out of the SROM during the system call. The application code can check only the final function pass/fail status after the execution returns from SROM.

4. Check the completion status: After the PRIVILEGED and SYSCALL_REQ bits are cleared to indicate completion of the system call, the CPUSS_SYSARG register should be read to check for the status of the system call. If the 32-bit value read from the CPUSS_SYSARG register is 0xAXXXXXXX (where 'X' denotes don't care hex values), the system call was successfully executed. For a failed system call, the status code is 0xF00000YY where YY indicates the reason for failure. See Table 20-1 for the complete list of status codes and their description.
5. Retrieve the return values: For system calls that return values such as silicon ID and checksum, the CPU or DAP should read the CPUSS_SYSREG and CPUSS_SYSARG registers to fetch the values returned.

20.5 System Calls

Table 20-1 lists all the system calls supported in PSoC 4 along with the function description and availability in device protection modes. See the Device Security chapter on page 76 for more information on the device protection settings. Note that some system calls cannot be called by the CPU as given in the table. Detailed information on each of the system calls follows the table.

Table 20-1. List of System Calls

System Call	Description	DAP Access			CPU Access
		Open	Protected	Kill	
Silicon ID	Returns the device Silicon ID, Family ID, and Revision ID	?	?	–	?
Load Flash Bytes	Loads data to the page latch buffer to be programmed later into the flash row, in 1 byte granularity, for a row size of 128 bytes	?	–	–	?
Write Row	Erases and then programs a row of flash with data in the page latch buffer	?	–	–	?
Program Row	Programs a row of flash with data in the page latch buffer	?	–	–	?
Erase All	Erases all user code in the flash array; the flash row-level protection data in the supervisory flash area	?	–	–	
Checksum	Calculates the checksum over the entire flash memory (user and supervisory area) or checksums a single row of flash	?	?	–	?
Write Protection	This programs both flash row-level protection settings and chip-level protection settings into the supervisory flash (row 0)	?	?	–	
Non-Blocking Write Row	Erases and then programs a row of flash with data in the page latch buffer. During program/erase pulses, the user may execute code from SRAM. This function is meant only for CPU access	–	–	–	?
Non-Blocking Program Row	Programs a row of flash with data in the page latch buffer. During program/erase pulses, the user may execute code from SRAM. This function is meant only for CPU access	–	–	–	?
Resume Non-Blocking	Resumes a non-blocking write row or non-blocking program row. This function is meant only for CPU access	–	–	–	?

20.5.1 Silicon ID

This function returns a 12-bit family ID, 16-bit silicon ID, and an 8-bit revision ID, and the current device protection mode. These values are returned to the CPUSS_SYSARG and CPUSS_SYSREQ registers. Parameters are passed through the CPUSS_SYSARG and CPUSS_SYSREQ registers.

Parameters

Address	Value to be Written	Description
CPUSS_SYSARG Register		
Bits [7:0]	0xB6	Key1
Bits [15:8]	0xD3	Key2
Bits [31:16]	0x0000	Not used
CPUSS_SYSREQ register		
Bits [15:0]	0x0000	Silicon ID opcode
Bits [31:16]	0x8000	Set SYSCALL_REQ bit

Return

Address	Return Value	Description
CPUSS_SYSARG register		
Bits [7:0]	Silicon ID Lo	
Bits [15:8]	Silicon ID Hi	2500-25FF
Bits [19:16]	Minor Revision Id	See the CY8C4xxx, CYBLxxxx Programming Specification for these values
Bits [23:20]	Major Revision Id	
Bits [27:24]	0xXX	Not used (don't care)
Bits [31:28]	0xA	Success status code
CPUSS_SYSREQ register		
Bits [11:0]	Family ID	Family ID is 0xA9 for PSoC 4000S
Bits [15:12]	Chip Protection	See the Device Security chapter on page 76
Bits [31:16]	0xXXXX	Not used

20.5.2 Configure Clock

This function initializes the clock necessary for flash programming and erasing operations. This API is used to ensure that the charge pump clock (clk_pump) and the HF clock (clk_hf) are set to IMO at 48 MHz prior to calling the flash write and flash erase APIs. The flash write and erase APIs will exit without acting on the flash and return the "Invalid Pump Clock Frequency" status if the IMO is the source of the charge pump clock and is not 48 MHz.

20.5.3 Load Flash Bytes

This function loads the page latch buffer with data to be programmed into a row of flash. The load size can range from 1-byte to the maximum number of bytes in a flash row, which is 128 bytes. Data is loaded into the page latch buffer starting at the location specified by the “Byte Addr” input parameter. Data loaded into the page latch buffer remains until a program operation is performed, which clears the page latch contents. The parameters for this function, including the data to be loaded into the page latch, are written to the SRAM; the starting address of the SRAM data is written to the CPUSS_SYSARG register. Note that the starting parameter address should be a word-aligned address.

Parameters

Address	Value to be Written	Description
SRAM Address - 32’hYY (32-bit wide, word-aligned SRAM address)		
Bits [7:0]	0xB6	Key1
Bits [15:8]	0xD7	Key2
Bits [23:16]	Byte Addr	Start address of page latch buffer to write data 0x00 – Byte 0 of latch buffer 0x7F – Byte 127 of latch buffer
Bits [31:24]	Flash Macro Select	0x00 – Flash Macro 0 0x01 – Flash Macro 1 (Refer to the Cortex-M0+ CPU chapter on page 22 for the number of flash macros in the device)
SRAM Address- 32’hYY + 0x04		
Bits [7:0]	Load Size	Number of bytes to be written to the page latch buffer. 0x00 – 1 byte 0x7F – 128 bytes
Bits [15:8]	0xXX	Don’t care parameter
Bits [23:16]	0xXX	Don’t care parameter
Bits [31:24]	0xXX	Don’t care parameter
SRAM Address- From (32’hYY + 0x08) to (32’hYY + 0x08 + Load Size)		
Byte 0	Data Byte [0]	First data byte to be loaded
.	.	.
.	.	.
Byte (Load size –1)	Data Byte [Load size –1]	Last data byte to be loaded
CPUSS_SYSARG register		
Bits [31:0]	32’hYY	32-bit word-aligned address of the SRAM that stores the first function parameter (key1)
CPUSS_SYSREQ register		
Bits [15:0]	0x0004	Load Flash Bytes opcode
Bits [31:16]	0x8000	Set SYSCALL_REQ bit

Return

Address	Return Value	Description
CPUSS_SYSARG register		
Bits [31:28]	0xA	Success status code
Bits [27:0]	0xXXXXXXX	Not used (don’t care)

20.5.4 Write Row

This function erases and then programs the addressed row of flash with the data in the page latch buffer. If all data in the page latch buffer is 0, then the program is skipped. The parameters for this function are stored in SRAM. The start address of the stored parameters is written to the CPUSS_SYSARG register. This function clears the page latch buffer contents after the row is programmed.

Usage Requirements: Call the Configure Clock API before calling this function. The Configure Clock API ensures that the charge pump clock (clk_pump) and the HF clock (clk_hf) are set to IMO at 48 MHz. Call the Load Flash Bytes function before calling this function. This function can do a write operation only if the corresponding flash row is not write protected.

Refer to the CLK_IMO_CONFIG register in the PSoC 4000S Family: PSoC 4 Registers TRM for more information.

Parameters

Address	Value to be Written	Description
SRAM Address: 32'hYY (32-bit wide, word-aligned SRAM address)		
Bits [7:0]	0xB6	Key1
Bits [15:8]	0xD8	Key2
Bits [31:16]	Row ID	Row number to write 0x0000 – Row 0
CPUSS_SYSARG register		
Bits [31:0]	32'hYY	32-bit word-aligned address of the SRAM that stores the first function parameter (key1)
CPUSS_SYSREQ register		
Bits [15:0]	0x0005	Write Row opcode
Bits [31:16]	0x8000	Set SYSCALL_REQ bit

Return

Address	Return Value	Description
CPUSS_SYSARG register		
Bits [31:28]	0xA	Success status code
Bits [27:0]	0xXXXXXXX	Not used (don't care)

20.5.5 Program Row

This function programs the addressed row of the flash with data in the page latch buffer. If all data in the page latch buffer is 0, then the program is skipped. The row must be in an erased state before calling this function. It clears the page latch buffer contents after the row is programmed.

Usage Requirements: Call the Configure Clock API before calling this function. The Configure Clock API ensures that the charge pump clock (clk_pump) and the HF clock (clk_hf) are set to IMO at 48 MHz. Call the Load Flash Bytes function before calling this function. The row must be in an erased state before calling this function. This function can do a program operation only if the corresponding flash row is not write-protected.

Parameters

Address	Value to be Written	Description
SRAM Address: 32'hYY (32-bit wide, word-aligned SRAM address)		
Bits [7:0]	0xB6	Key1
Bits [15:8]	0xD9	Key2
Bits [31:16]	Row ID	Row number to program 0x0000 – Row 0
CPUSS_SYSARG register		
Bits [31:0]	32'hYY	32-bit word-aligned address of the SRAM that stores the first function parameter (key1)
CPUSS_SYSREQ register		
Bits [15:0]	0x0006	Program Row opcode
Bits [31:16]	0x8000	Set SYSCALL_REQ bit

Return

Address	Return Value	Description
CPUSS_SYSARG register		
Bits [31:28]	0xA	Success status code
Bits [27:0]	0xXXXXXXX	Not used (don't care)

20.5.6 Erase All

This function erases all the user code in the flash main arrays and the row-level protection data in supervisory flash row 0 of each flash macro.

Usage Requirements: Call the Configure Clock API before calling this function. The Configure Clock API ensures that the charge pump clock (clk_pump) and the HF clock (clk_hf) are set to IMO at 48 MHz. This API can be called only from the DAP in the programming mode and only if the chip protection mode is OPEN. If the chip protection mode is PROTECTED, then the Write Protection API must be used by the DAP to change the protection settings to OPEN. Changing the protection setting from PROTECTED to OPEN automatically does an erase all operation.

Parameters

Address	Value to be Written	Description
SRAM Address: 32'hYY (32-bit wide, word-aligned SRAM address)		
Bits [7:0]	0xB6	Key1
Bits [15:8]	0xDD	Key2
Bits [31:16]	0xXXXX	Don't care
CPUSS_SYSARG register		
Bits [31:0]	32'hYY	32-bit word-aligned address of the SRAM that stores the first function parameter (key1)
CPUSS_SYSREQ register		
Bits [15:0]	0x000A	Erase All opcode
Bits [31:16]	0x8000	Set SYSCALL_REQ bit

Return

Address	Return Value	Description
CPUSS_SYSARG register		
Bits [31:28]	0xA	Success status code
Bits [27:0]	0xXXXXXXX	Not used (don't care)

20.5.7 Checksum

This function reads either the whole flash memory or a row of flash and returns the 24-bit sum of each byte read in that flash region. When performing a checksum on the whole flash, the user code and supervisory flash regions are included. When performing a checksum only on one row of flash, the flash row number is passed as a parameter. Bytes 2 and 3 of the parameters select whether the checksum is performed on the whole flash memory or a row of user code flash.

Parameters

Address	Value to be Written	Description
CPUSS_SYSARG register		
Bits [7:0]	0xB6	Key1
Bits [15:8]	0xDE	Key2
Bits [31:16]	Row ID	Selects the flash row number on which the checksum operation is done Row number – 16 bit flash row number or 0x8000 – Checksum is performed on entire flash memory
CPUSS_SYSREQ register		
Bits [15:0]	0x000B	Checksum opcode
Bits [31:16]	0x8000	Set SYSCALL_REQ bit

Return

Address	Return Value	Description
CPUSS_SYSARG register		
Bits [31:28]	0xA	Success status code
Bits [27:24]	0xX	Not used (don’t care)
Bits [23:0]	Checksum	24-bit checksum value of the selected flash region

20.5.8 Write Protection

This function programs both the flash row-level protection settings and the device protection settings in the supervisory flash row. The flash row-level protection settings are programmed separately for each flash macro in the device. Each row has a single protection bit. The total number of protection bytes is the number of flash rows divided by eight. The chip-level protection settings (1-byte) are stored in flash macro zero in the last byte location in row zero of the supervisory flash. The size of the supervisory flash row is the same as the user code flash row size.

Usage Requirements: Call the Configure Clock API before calling this function. The Configure Clock API ensures that the charge pump clock (clk_pump) and the HF clock (clk_hf) are set to IMO at 48 MHz. The Load Flash Bytes function is used to load the flash protection bytes of a flash macro into the page latch buffer corresponding to the macro. The starting address parameter for the load function should be zero. The flash macro number should be one that needs to be programmed; the number of bytes to load is the number of flash protection bytes in that macro.

Then, the Write Protection function is called, which programs the flash protection bytes from the page latch to be the corresponding flash macro's supervisory row. In flash macro zero, which also stores the device protection settings, the device level protection setting is passed as a parameter in the CPUSS_SYSARG register.

Parameters

Address	Value to be Written	Description
CPUSS_SYSARG register		
Bits [7:0]	0xB6	Key1
Bits [15:8]	0xE0	Key2
Bits [23:16]	Device Protection Byte	Parameter applicable only for Flash Macro 0 0x01 – OPEN mode 0x02 – PROTECTED mode 0x04 – KILL mode
Bits [31:24]	Flash Macro Select	0x00 – Flash Macro 0 0x01 – Flash Macro 1
CPUSS_SYSREQ register		
Bits [15:0]	0x000D	Write Protection opcode
Bits [31:16]	0x8000	Set SYSCALL_REQ bit

Return

Address	Return Value	Description
CPUSS_SYSARG register		
Bits [31:28]	0xA	Success status code
Bits [27:24]	0xX	Not used (don't care)
Bits [23:0]	0x000000	

20.5.9 Non-Blocking Write Row

This function is used when a flash row needs to be written by the CM0+ CPU in a non-blocking manner, so that the CPU can execute code from SRAM while the write operation is being done. The explanation of non-blocking system calls is explained in Blocking and Non-Blocking System Calls on page 174.

The non-blocking write row system call has three phases: Pre-program, Erase, Program. Pre-program is the step in which all of the bits in the flash row are written a '1' in preparation for an erase operation. The erase operation clears all of the bits in the row, and the program operation writes the new data to the row.

While each phase is being executed, the CPU can execute code from SRAM. When the non-blocking write row system call is initiated, the user cannot call any system call function other than the Resume Non-Blocking function, which is required for completion of the non-blocking write operation. After the completion of each phase, the SPC triggers its interrupt. In this interrupt, call the Resume Non-Blocking system call.

Note The device firmware must not attempt to put the device to sleep during a non-blocking write row. This action will reset the page latch buffer and the flash will be written with all zeroes.

Usage Requirements: Call the Configure Clock API before calling this function. The Configure Clock API ensures that the charge pump clock (clk_pump) and the HF clock (clk_hf) are set to IMO at 48 MHz. Call the Load Flash Bytes function before calling this function to load the data bytes that will be used for programming the row. In addition, the non-blocking write row function can be called only from the SRAM. This is because the CM0+ CPU cannot execute code from flash while doing the flash erase program operations. If this function is called from the flash memory, the result is undefined, and may return a bus error and trigger a hard fault when the flash fetch operation is being done.

Parameters

Address	Value to be Written	Description
SRAM Address 32'hYY (32-bit wide, word-aligned SRAM address)		
Bits [7:0]	0xB6	Key1
Bits [15:8]	0xDA	Key2
Bits [31:16]	Row ID	Row number to write 0x0000 – Row 0
CPUSS_SYSARG register		
Bits [31:0]	32'hYY	32-bit word-aligned address of the SRAM that stores the first function parameter (key1)
CPUSS_SYSREQ register		
Bits [15:0]	0x0007	Non-Blocking Write Row opcode
Bits [31:16]	0x8000	Set SYSCALL_REQ bit

Return

Address	Return Value	Description
CPUSS_SYSARG register		
Bits [31:28]	0xA	Success status code
Bits [27:0]	0xXXXXXXX	Not used (don't care)

20.5.10 Non-Blocking Program Row

This function is used when a flash row needs to be programmed by the CM0+ CPU in a non-blocking manner, so that the CPU can execute code from the SRAM when the program operation is being done. The explanation of non-blocking system calls is explained in Blocking and Non-Blocking System Calls on page 174. While the program operation is being done, the CPU can execute code from the SRAM. When the non-blocking program row system call is called, the user cannot call any other system call function other than the Resume Non-Blocking function, which is required for the completion of the non-blocking write operation.

Unlike the Non-Blocking Write Row system call, the Program system call only has a single phase. Therefore, the Resume Non-Blocking function only needs to be called once from the SPC interrupt when using the Non-Blocking Program Row system call.

Usage Requirements: Call the Configure Clock API before calling this function. The Configure Clock API ensures that the charge pump clock (clk_pump) and the HF clock (clk_hf) are set to IMO at 48 MHz. Call the Load Flash Bytes function before calling this function to load the data bytes that will be used for programming the row. In addition, the non-blocking program row function can be called only from SRAM. This is because the CM0+ CPU cannot execute code from flash while doing flash program operations. If this function is called from flash memory, the result is undefined, and may return a bus error and trigger a hard fault when the flash fetch operation is being done.

Parameters

Address	Value to be Written	Description
SRAM Address 32'hYY (32-bit wide, word-aligned SRAM address)		
Bits [7:0]	0xB6	Key1
Bits [15:8]	0xDB	Key2
Bits [31:16]	Row ID	Row number to write 0x0000 – Row 0
CPUSS_SYSARG register		
Bits [31:0]	32'hYY	32-bit word-aligned address of the SRAM that stores the first function parameter (key1)
CPUSS_SYSREQ register		
Bits [15:0]	0x0008	Non-Blocking Program Row opcode
Bits [31:16]	0x8000	Set SYSCALL_REQ bit

Return

Address	Return Value	Description
CPUSS_SYSARG register		
Bits [31:28]	0xA	Success status code
Bits [27:0]	0xXXXXXXX	Not used (don't care)

20.5.11 Resume Non-Blocking

This function completes the additional phases of erase and program that were started using the non-blocking write row and non-blocking program row system calls. This function must be called thrice following a call to Non-Blocking Write Row or once following a call to Non-Blocking Program Row from the SPC ISR. No other system calls can execute until all phases of the program or erase operation are complete. More details on the procedure of using the non-blocking functions are explained in Blocking and Non-Blocking System Calls on page 174.

Parameters

Address	Value to be Written	Description
SRAM Address 32'hYY (32-bit wide, word-aligned SRAM address)		
Bits [7:0]	0xB6	Key1
Bits [15:8]	0xDC	Key2
Bits [31:16]	0xXXXX	Don't care. Not used by SROM
CPUSS_SYSARG register		
Bits [31:0]	32'hYY	32-bit word-aligned address of the SRAM that stores the first function parameter (key1)
CPUSS_SYSREQ register		
Bits [15:0]	0x0009	Resume Non-Blocking opcode
Bits [31:16]	0x8000	Set SYSCALL_REQ bit

Return

Address	Return Value	Description
CPUSS_SYSARG register		
Bits [31:28]	0xA	Success status code
Bits [27:0]	0xXXXXXXX	Not used (don't care)

20.6 System Call Status

At the end of every system call, a status code is written over the arguments in the CPUSS_SYSARG register. A success status is 0xAXXXXXXX, where X indicates don't care values or return data in the case of the system calls that return a value. A failure status is indicated by 0xF00000XX, where XX is the failure code.

Table 20-2. System Call Status Codes

Status Code (32-bit value in CPUSS_SYSARG Register)	Description
AXXXXXXXh	Success – The "X" denotes a don't care value, which has a value of '0' returned by the SROM, unless the API returns parameters directly to the CPUSS_SYSARG register.
F0000001h	Invalid Chip Protection Mode – This API is not available during the current chip protection mode.
F0000003h	Invalid Page Latch Address – The address within the page latch buffer is either out of bounds or the size provided is too large for the page address.
F0000004h	Invalid Address – The row ID or byte address provided is outside of the available memory.
F0000005h	Row Protected – The row ID provided is a protected row.
F0000007h	Resume Completed – All non-blocking APIs have completed. The resume API cannot be called until the next non-blocking API.
F0000008h	Pending Resume – A non-blocking API was initiated and must be completed by calling the resume API, before any other APIs may be called.
F0000009h	System Call Still In Progress – A resume or non-blocking is still in progress. The SPC ISR must fire before attempting the next resume.
F000000Ah	Checksum Zero Failed – The calculated checksum was not zero.
F000000Bh	Invalid Opcode – The opcode is not a valid API opcode.
F000000Ch	Key Opcode Mismatch – The opcode provided does not match key1 and key2.
F000000Eh	Invalid Start Address – The start address is greater than the end address provided.
F0000012h	Invalid Pump Clock Frequency - IMO must be set to 48 MHz and HF clock source to the IMO clock source before flash write/erase operations.

20.7 Non-Blocking System Call Pseudo Code

This section contains pseudo code to demonstrate how to set up a non-blocking system call and execute code out of SRAM during the flash programming operations.

```
#define REG(addr)          (*((volatile uint32 *) (addr)))
#define CM0_ISER_REG            REG( 0xE000E100 )
#define CPUSS_CONFIG_REG           REG( 0x40100000 )
#define CPUSS_SYSREQ_REG           REG( 0x40100004 )
#define CPUSS_SYSARG_REG           REG( 0x40100008 )

#define ROW_SIZE_          ()
#define ROW_SIZE        (ROW_SIZE_)

/*Variable to keep track of how many times SPC ISR is triggered */
__ram int iStatusInt = 0x00;

__flash int main(void)
{
  DoUserStuff();

  /*CM0+ interrupt enable bit for spc interrupt enable */
  CM0_ISER_REG |= 0x00000040;

  /*Set CPUSS_CONFIG.VECS_IN_RAM because SPC ISR should be in SRAM */
  CPUSS_CONFIG_REG |= 0x00000001;

  /*Call non-blocking write row API */
  NonBlockingWriteRow();

  /*End Program */
  while(1);
}
__sram void SpcIntHandler(void)
{
  /* Write key1, key2 parameters to SRAM */
  REG( 0x20000000 ) = 0x0000DCB6;

  /*Write the address of key1 to the CPUSS_SYSARG reg */
  CPUSS_SYSARG_REG = 0x20000000;

  /*Write the API opcode = 0x09 to the CPUSS_SYSREQ.COMMAND
  * register and assert the sysreq bit
  */
  CPUSS_SYSREQ_REG = 0x80000009;

  /* Number of times the ISR has triggered */
  iStatusInt ++;
}
__sram void NonBlockingWriteRow(void)
{
  int iter;

  /*Load the Flash page latch with data to write*/
  * Write key1, key2, byte address, and macro sel parameters to SRAM
  */
  REG( 0x20000000 ) = 0x0000D7B6;
```

```
  //Write load size param (128 bytes) to SRAM
  REG( 0x20000004 ) = 0x0000007F;


  for(i = 0; i < ROW_SIZE/4; i += 1)
  {
     REG( 0x20000008 + i*4 ) = 0xDADADADA;
  }

  /*Write the address of the key1 param to CPUSS_SYSARG reg*/
  CPUSS_SYSARG_REG = 0x20000000;

  /*Write the API opcode = 0x04 to CPUSS_SYSREQ.COMMAND
  * register and assert the sysreq bit
  */
  CPUSS_SYSREQ_REG = 0x80000004;

  /*Perform Non-Blocking Write Row on Row 200 as an example.
  * Write key1, key2, row id to SRAM row id = 0xC8 -> which is row 200
  */
  REG( 0x20000000 ) = 0x00C8DAB6;

  /*Write the address of the key1 param to CPUSS_SYSARG reg */
  CPUSS_SYSARG_REG = 0x20000000;

  /*Write the API opcode = 0x07 to CPUSS_SYSREQ.COMMAND
  * register and assert the sysreq bit
  */
  CPUSS_SYSREQ_REG = 0x80000007;

  /*Execute user code until iStatusInt equals 3 to signify
  * 3 SPC interrupts have happened. This should be 1 in case
  * of non-blocking program System Call
  */
  while( iStatusInt != 0x03 )
  {
     DoOtherUserStuff();
  }

  /* Get the success or failure status of System Call*/
  syscall_status = CPUSS_SYSARG_REG;
}
```

In the code, the CM0+ exception table is configured to be in SRAM by writing 0x01 to the CPUSS_CONFIG register. The SRAM exception table should have the vector address of the SPC interrupt as the address of the *SpcIntHandler()* function, which is also defined to be in SRAM. See the Interrupts chapter on page 27 for details on configuring the CM0+ exception table to be in SRAM. The pseudo code for a non-blocking program system call is also similar, except that the function opcode and parameters will differ and the iStatusInt variable should be polled for 1 instead of 3. This is because the SPC ISR will be triggered only once for a non-blocking program system call.

Glossary

The Glossary section explains the terminology used in this technical reference manual. Glossary terms are characterized in ***bold, italic font*** throughout the text of this manual.

A

accumulator	In a CPU, a register in which intermediate results are stored. Without an accumulator, it is necessary to write the result of each calculation (addition, subtraction, shift, and so on.) to main memory and read them back. Access to main memory is slower than access to the accumulator, which usually has direct paths to and from the arithmetic and logic unit (ALU).
active high	1. A logic signal having its asserted state as the logic 1 state. 2. A logic signal having the logic 1 state as the higher voltage of the two states.
active low	1. A logic signal having its asserted state as the logic 0 state. 2. A logic signal having its logic 1 state as the lower voltage of the two states: inverted logic.
address	The label or number identifying the memory location (RAM, ROM, or register) where a unit of information is stored.
algorithm	A procedure for solving a mathematical problem in a finite number of steps that frequently involve repetition of an operation.
ambient temperature	The temperature of the air in a designated area, particularly the area surrounding the PSoC device.
analog	See ***analog signals***.
analog blocks	The basic programmable opamp circuits. These are SC (switched capacitor) and CT (continuous time) blocks. These blocks can be interconnected to provide ADCs, DACs, multi-pole filters, gain stages, and much more.
analog output	An output that is capable of driving any voltage between the supply rails, instead of just a logic 1 or logic 0.
analog signals	A signal represented in a continuous form with respect to continuous times, as contrasted with a digital signal represented in a discrete (discontinuous) form in a sequence of time.
analog-to-digital (ADC)	A device that changes an analog signal to a digital signal of corresponding magnitude. Typically, an ADC converts a voltage to a digital number. The *digital-to-analog (DAC)* converter performs the reverse operation.

AND See *Boolean Algebra*.

API (Application Programming Interface) A series of software routines that comprise an interface between a computer application and lower-level services and functions (for example, user modules and libraries). APIs serve as building blocks for programmers that create software applications.

array An array, also known as a vector or list, is one of the simplest data structures in computer programming. Arrays hold a fixed number of equally-sized data elements, generally of the same data type. Individual elements are accessed by index using a consecutive range of integers, as opposed to an associative array. Most high-level programming languages have arrays as a built-in data type. Some arrays are multi-dimensional, meaning they are indexed by a fixed number of integers; for example, by a group of two integers. One- and two-dimensional arrays are the most common. Also, an array can be a group of capacitors or resistors connected in some common form.

assembly A symbolic representation of the machine language of a specific processor. Assembly language is converted to machine code by an assembler. Usually, each line of assembly code produces one machine instruction, though the use of macros is common. Assembly languages are considered low-level languages; where as C is considered a high-level language.

asynchronous A signal whose data is acknowledged or acted upon immediately, irrespective of any clock signal.

attenuation The decrease in intensity of a signal as a result of absorption of energy and of scattering out of the path to the detector, but not including the reduction due to geometric spreading. Attenuation is usually expressed in dB.

B

bandgap reference A stable voltage reference design that matches the positive temperature coefficient of V_T with the negative temperature coefficient of V_{BE}, to produce a zero temperature coefficient (ideally) reference.

bandwidth

1. The frequency range of a message or information processing system measured in hertz.
2. The width of the spectral region over which an amplifier (or absorber) has substantial gain (or loss); it is sometimes represented more specifically as, for example, full width at half maximum.

bias

1. A systematic deviation of a value from a reference value.
2. The amount by which the average of a set of values departs from a reference value.
3. The electrical, mechanical, magnetic, or other force (field) applied to a device to establish a reference level to operate the device.

bias current The constant low-level DC current that is used to produce a stable operation in amplifiers. This current can sometimes be changed to alter the bandwidth of an amplifier.

binary The name for the base 2 numbering system. The most common numbering system is the base 10 numbering system. The base of a numbering system indicates the number of values that may exist for a particular positioning within a number for that system. For example, in base 2, binary, each position may have one of two values (0 or 1). In the base 10, decimal, numbering system, each position may have one of ten values (0, 1, 2, 3, 4, 5, 6, 7, 8, and 9).

bit A single digit of a binary number. Therefore, a bit may only have a value of ‘0’ or ‘1’. A group of 8 bits is called a byte. Because the PSoC's M8CP is an 8-bit microcontroller, the PSoC devices's native data chunk size is a byte.

bit rate (BR) The number of bits occurring per unit of time in a bit stream, usually expressed in bits per second (bps).

block
1. A functional unit that performs a single function, such as an oscillator.
2. A functional unit that may be configured to perform one of several functions, such as a digital PSoC block or an analog PSoC block.

Boolean Algebra In mathematics and computer science, Boolean algebras or Boolean lattices, are algebraic structures which "capture the essence" of the logical operations AND, OR and NOT as well as the set theoretic operations union, intersection, and complement. Boolean algebra also defines a set of theorems that describe how Boolean equations can be manipulated. For example, these theorems are used to simplify Boolean equations, which will reduce the number of logic elements needed to implement the equation.

The operators of Boolean algebra may be represented in various ways. Often they are simply written as AND, OR, and NOT. In describing circuits, NAND (NOT AND), NOR (NOT OR), XNOR (exclusive NOT OR), and XOR (exclusive OR) may also be used. Mathematicians often use + (for example, A+B) for OR and • for AND (for example, A*B) (in some ways those operations are analogous to addition and multiplication in other algebraic structures) and represent NOT by a line drawn above the expression being negated (for example, ~A, A_, !A).

break-before-make The elements involved go through a disconnected state entering (‘break”) before the new connected state (“make”).

broadcast net A signal that is routed throughout the microcontroller and is accessible by many blocks or systems.

buffer
1. A storage area for data that is used to compensate for a speed difference, when transferring data from one device to another. Usually refers to an area reserved for I/O operations, into which data is read, or from which data is written.
2. A portion of memory set aside to store data, often before it is sent to an external device or as it is received from an external device.
3. An amplifier used to lower the output impedance of a system.

bus
1. A named connection of nets. Bundling nets together in a bus makes it easier to route nets with similar routing patterns.
2. A set of signals performing a common function and carrying similar data. Typically represented using vector notation; for example, address[7:0].
3. One or more conductors that serve as a common connection for a group of related devices.

byte A digital storage unit consisting of 8 bits.

C

C A high-level programming language.

capacitance A measure of the ability of two adjacent conductors, separated by an insulator, to hold a charge when a voltage differential is applied between them. Capacitance is measured in units of Farads.

capture	To extract information automatically through the use of software or hardware, as opposed to hand-entering of data into a computer file.
chaining	Connecting two or more 8-bit digital blocks to form 16-, 24-, and even 32-bit functions. Chaining allows certain signals such as Compare, Carry, Enable, Capture, and Gate to be produced from one block to another.
checksum	The checksum of a set of data is generated by adding the value of each data word to a sum. The actual checksum can simply be the result sum or a value that must be added to the sum to generate a pre-determined value.
clear	To force a bit/register to a value of logic ‘0’.
clock	The device that generates a periodic signal with a fixed frequency and duty cycle. A clock is sometimes used to synchronize different logic blocks.
clock generator	A circuit that is used to generate a clock signal.
CMOS	The logic gates constructed using *MOS* transistors connected in a complementary manner. CMOS is an acronym for complementary metal-oxide semiconductor.
comparator	An electronic circuit that produces an output voltage or current whenever two input levels simultaneously satisfy predetermined amplitude requirements.
compiler	A program that translates a high-level language, such as C, into machine language.
configuration	In a computer system, an arrangement of functional units according to their nature, number, and chief characteristics. Configuration pertains to hardware, software, firmware, and documentation. The configuration will affect system performance.
configuration space	In PSoC devices, the register space accessed when the XIO bit, in the CPU_F register, is set to ‘1’.
crowbar	A type of over-voltage protection that rapidly places a low-resistance shunt (typically an SCR) from the signal to one of the power supply rails, when the output voltage exceeds a predetermined value.
CPUSS	CPU subsystem
crystal oscillator	An oscillator in which the frequency is controlled by a piezoelectric crystal. Typically a piezoelectric crystal is less sensitive to ambient temperature than other circuit components.
cyclic redundancy check (CRC)	A calculation used to detect errors in data communications, typically performed using a linear feedback shift register. Similar calculations may be used for a variety of other purposes such as data compression.

D

data bus	A bi-directional set of signals used by a computer to convey information from a memory location to the central processing unit and vice versa. More generally, a set of signals used to convey data between digital functions.
data stream	A sequence of digitally encoded signals used to represent information in transmission.
data transmission	Sending data from one place to another by means of signals over a channel.
debugger	A hardware and software system that allows the user to analyze the operation of the system under development. A debugger usually allows the developer to step through the firmware one step at a time, set break points, and analyze memory.
dead band	A period of time when neither of two or more signals are in their active state or in transition.
decimal	A base-10 numbering system, which uses the symbols 0, 1, 2, 3, 4, 5, 6, 7, 8 and 9 (called digits) together with the decimal point and the sign symbols + (plus) and - (minus) to represent numbers.
default value	Pertaining to the pre-defined initial, original, or specific setting, condition, value, or action a system will assume, use, or take in the absence of instructions from the user.
device	The device referred to in this manual is the PSoC device, unless otherwise specified.
die	An non-packaged integrated circuit (IC), normally cut from a wafer.
digital	A signal or function, the amplitude of which is characterized by one of two discrete values: ‘0’ or ‘1’.
digital blocks	The 8-bit logic blocks that can act as a counter, timer, serial receiver, serial transmitter, CRC generator, pseudo-random number generator, or SPI.
digital logic	A methodology for dealing with expressions containing two-state variables that describe the behavior of a circuit or system.
digital-to-analog (DAC)	A device that changes a digital signal to an analog signal of corresponding magnitude. The *analog-to-digital (ADC)* converter performs the reverse operation.
direct access	The capability to obtain data from a storage device, or to enter data into a storage device, in a sequence independent of their relative positions by means of addresses that indicate the physical location of the data.
duty cycle	The relationship of a clock period *high time* to its *low time*, expressed as a percent.

E

External Reset (XRES_N)	An active high signal that is driven into the PSoC device. It causes all operation of the CPU and blocks to stop and return to a pre-defined state.

F

falling edge A transition from a logic 1 to a logic 0. Also known as a negative edge.

feedback The return of a portion of the output, or processed portion of the output, of a (usually active) device to the input.

filter A device or process by which certain frequency components of a signal are attenuated.

firmware The software that is embedded in a hardware device and executed by the CPU. The software may be executed by the end user, but it may not be modified.

flag Any of various types of indicators used for identification of a condition or event (for example, a character that signals the termination of a transmission).

Flash An electrically programmable and erasable, *volatile* technology that provides users with the programmability and data storage of EPROMs, plus in-system erasability. Nonvolatile means that the data is retained when power is off.

Flash bank A group of flash ROM blocks where flash block numbers always begin with '0' in an individual flash bank. A flash bank also has its own block level protection information.

Flash block The smallest amount of flash ROM space that may be programmed at one time and the smallest amount of flash space that may be protected. A flash block holds 64 bytes.

flip-flop A device having two stable states and two input terminals (or types of input signals) each of which corresponds with one of the two states. The circuit remains in either state until it is made to change to the other state by application of the corresponding signal.

frequency The number of cycles or events per unit of time, for a periodic function.

G

gain The ratio of output current, voltage, or power to input current, voltage, or power, respectively. Gain is usually expressed in dB.

gate

1. A device having one output channel and one or more input channels, such that the output channel state is completely determined by the input channel states, except during switching transients.
2. One of many types of combinational logic elements having at least two inputs (for example, AND, OR, NAND, and NOR (also see *Boolean Algebra*)).

ground

1. The electrical neutral line having the same potential as the surrounding earth.
2. The negative side of DC power supply.
3. The reference point for an electrical system.
4. The conducting paths between an electric circuit or equipment and the earth, or some conducting body serving in place of the earth.

H

hardware A comprehensive term for all of the physical parts of a computer or embedded system, as distinguished from the data it contains or operates on, and the software that provides instructions for the hardware to accomplish tasks.

hardware reset A reset that is caused by a circuit, such as a POR, watchdog reset, or external reset. A hardware reset restores the state of the device as it was when it was first powered up. Therefore, all registers are set to the POR value as indicated in register tables throughout this document.

hexadecimal A base 16 numeral system (often abbreviated and called hex), usually written using the symbols 0-9 and A-F. It is a useful system in computers because there is an easy mapping from four bits to a single hex digit. Thus, one can represent every byte as two consecutive hexadecimal digits. Compare the binary, hex, and decimal representations:

bin = hex = dec

0000b = 0x0 = 0

0001b = 0x1 = 1

0010b = 0x2 = 2

...

1001b = 0x9 = 9

1010b = 0xA = 10

1011b = 0xB = 11

...

1111b = 0xF = 15

So the decimal numeral 79 whose binary representation is 0100 1111b can be written as 4Fh in hexadecimal (0x4F).

high time The amount of time the signal has a value of '1' in one period, for a periodic digital signal.

I

I^2C A two-wire serial computer bus by Phillips Semiconductors (now NXP Semiconductors). I^2C is an Inter-Integrated Circuit. It is used to connect low-speed peripherals in an embedded system. The original system was created in the early 1980s as a battery control interface, but it was later used as a simple internal bus system for building control electronics. I^2C uses only two bidirectional pins, clock and data, both running at +5 V and pulled high with resistors. The bus operates at 100 Kbps in standard mode and 400 Kbps in fast mode.

idle state A condition that exists whenever user messages are not being transmitted, but the service is immediately available for use.

impedance	1. The resistance to the flow of current caused by resistive, capacitive, or inductive devices in a circuit. 2. The total passive opposition offered to the flow of electric current. Note the impedance is determined by the particular combination of resistance, inductive reactance, and capacitive reactance in a given circuit.
input	A point that accepts data, in a device, process, or channel.
input/output (I/O)	A device that introduces data into or extracts data from a system.
instruction	An expression that specifies one operation and identifies its operands, if any, in a programming language such as C or assembly.
instruction mnemonics	A set of acronyms that represent the opcodes for each of the assembly-language instructions, for example, ADD, SUBB, MOV.
integrated circuit (IC)	A device in which components such as resistors, capacitors, diodes, and *transistors* are formed on the surface of a single piece of semiconductor.
interface	The means by which two systems or devices are connected and interact with each other.
interrupt	A suspension of a process, such as the execution of a computer program, caused by an event external to that process, and performed in such a way that the process can be resumed.
interrupt service routine (ISR)	A block of code that normal code execution is diverted to when the M8CP receives a hardware interrupt. Many interrupt sources may each exist with its own priority and individual ISR code block. Each ISR code block ends with the RETI instruction, returning the device to the point in the program where it left normal program execution.

J

jitter	1. A misplacement of the timing of a transition from its ideal position. A typical form of corruption that occurs on serial data streams. 2. The abrupt and unwanted variations of one or more signal characteristics, such as the interval between successive pulses, the amplitude of successive cycles, or the frequency or phase of successive cycles.

L

latency	The time or delay that it takes for a signal to pass through a given circuit or network.
least significant bit (LSb)	The binary digit, or bit, in a binary number that represents the least significant value (typically the right-hand bit). The bit versus byte distinction is made by using a lower case “b” for bit in LSb.
least significant byte (LSB)	The byte in a multi-byte word that represents the least significant values (typically the right-hand byte). The byte versus bit distinction is made by using an upper case “B” for byte in LSB.

Linear Feedback Shift Register (LFSR)	A shift register whose data input is generated as an *XOR* of two or more elements in the register chain.
load	The electrical demand of a process expressed as power (watts), current (amps), or resistance (ohms).
logic function	A mathematical function that performs a digital operation on digital data and returns a digital value.
lookup table (LUT)	A logic block that implements several logic functions. The logic function is selected by means of select lines and is applied to the inputs of the block. For example: A 2 input LUT with 4 select lines can be used to perform any one of 16 logic functions on the two inputs resulting in a single logic output. The LUT is a combinational device; therefore, the input/output relationship is continuous, that is, not sampled.
low time	The amount of time the signal has a value of '0' in one period, for a periodic digital signal.
low-voltage detect (LVD)	A circuit that senses V_{DDD} and provides an interrupt to the system when V_{DDD} falls below a selected threshold.

M

M8CP	An 8-bit Harvard Architecture microprocessor. The microprocessor coordinates all activity inside a PSoC device by interfacing to the flash, SRAM, and register space.
macro	A programming language macro is an abstraction, whereby a certain textual pattern is replaced according to a defined set of rules. The interpreter or compiler automatically replaces the macro instance with the macro contents when an instance of the macro is encountered. Therefore, if a macro is used five times and the macro definition required 10 bytes of code space, 50 bytes of code space will be needed in total.
mask	1. To obscure, hide, or otherwise prevent information from being derived from a signal. It is usually the result of interaction with another signal, such as noise, static, jamming, or other forms of interference. 2. A pattern of bits that can be used to retain or suppress segments of another pattern of bits, in computing and data processing systems.
master device	A device that controls the timing for data exchanges between two devices. Or when devices are cascaded in width, the master device is the one that controls the timing for data exchanges between the cascaded devices and an external interface. The controlled device is called the *slave device*.
microcontroller	An integrated circuit device that is designed primarily for control systems and products. In addition to a CPU, a microcontroller typically includes memory, timing circuits, and I/O circuitry. The reason for this is to permit the realization of a controller with a minimal quantity of devices, thus achieving maximal possible miniaturization. This in turn, will reduce the volume and the cost of the controller. The microcontroller is normally not used for general-purpose computation as is a microprocessor.
mnemonic	A tool intended to assist the memory. Mnemonics rely on not only repetition to remember facts, but also on creating associations between easy-to-remember constructs and lists of data. A two to four character string representing a microprocessor instruction.

mode	A distinct method of operation for software or hardware. For example, the Digital PSoC block may be in either counter mode or timer mode.
modulation	A range of techniques for encoding information on a carrier signal, typically a sine-wave signal. A device that performs modulation is known as a modulator.
Modulator	A device that imposes a signal on a carrier.
MOS	An acronym for metal-oxide semiconductor.
most significant bit (MSb)	The binary digit, or bit, in a binary number that represents the most significant value (typically the left-hand bit). The bit versus byte distinction is made by using a lower case “b” for bit in MSb.
most significant byte (MSB)	The byte in a multi-byte word that represents the most significant values (typically the left-hand byte). The byte versus bit distinction is made by using an upper case “B” for byte in MSB.
multiplexer (mux)	1. A logic function that uses a binary value, or address, to select between a number of inputs and conveys the data from the selected input to the output. 2. A technique which allows different input (or output) signals to use the same lines at different times, controlled by an external signal. Multiplexing is used to save on wiring and I/O ports.

N

NAND	See *Boolean Algebra*.
negative edge	A transition from a logic 1 to a logic 0. Also known as a falling edge.
net	The routing between devices.
nibble	A group of four bits, which is one-half of a byte.
noise	1. A disturbance that affects a signal and that may distort the information carried by the signal. 2. The random variations of one or more characteristics of any entity such as voltage, current, or data.
NOR	See *Boolean Algebra*.
NOT	See *Boolean Algebra*.

O

OR	See *Boolean Algebra*.
oscillator	A circuit that may be crystal controlled and is used to generate a clock frequency.
output	The electrical signal or signals which are produced by an analog or digital block.

P

parallel	The means of communication in which digital data is sent multiple bits at a time, with each simultaneous bit being sent over a separate line.
parameter	Characteristics for a given block that have either been characterized or may be defined by the designer.
parameter block	A location in memory where parameters for the SSC instruction are placed prior to execution.
parity	A technique for testing transmitting data. Typically, a binary digit is added to the data to make the sum of all the digits of the binary data either always even (even parity) or always odd (odd parity).
path	1. The logical sequence of instructions executed by a computer. 2. The flow of an electrical signal through a circuit.
pending interrupts	An interrupt that is triggered but not serviced, either because the processor is busy servicing another interrupt or global interrupts are disabled.
phase	The relationship between two signals, usually the same frequency, that determines the delay between them. This delay between signals is either measured by time or angle (degrees).
pin	A terminal on a hardware component. Also called lead.
pinouts	The pin number assignment: the relation between the logical inputs and outputs of the PSoC device and their physical counterparts in the printed circuit board (PCB) package. Pinouts will involve pin numbers as a link between schematic and PCB design (both being computer generated files) and may also involve pin names.
port	A group of pins, usually eight.
positive edge	A transition from a logic 0 to a logic 1. Also known as a rising edge.
posted interrupts	An interrupt that is detected by the hardware but may or may not be enabled by its mask bit. Posted interrupts that are not masked become pending interrupts.
Power On Reset (POR)	A circuit that forces the PSoC device to reset when the voltage is below a pre-set level. This is one type of *hardware reset*.
program counter	The instruction pointer (also called the program counter) is a register in a computer processor that indicates where in memory the CPU is executing instructions. Depending on the details of the particular machine, it holds either the address of the instruction being executed, or the address of the next instruction to be executed.
protocol	A set of rules. Particularly the rules that govern networked communications.
PSoC®	Cypress's Programmable System-on-Chip (PSoC®) devices.
PSoC blocks	*See analog blocks* and *digital blocks*.
PSoC Creator™	The software for Cypress's next generation Programmable System-on-Chip technology.

pulse	A rapid change in some characteristic of a signal (for example, phase or frequency), from a base-line value to a higher or lower value, followed by a rapid return to the baseline value.
pulse width modulator (PWM)	An output in the form of duty cycle which varies as a function of the applied measure.

R

RAM	An acronym for random access memory. A data-storage device from which data can be read out and new data can be written in.
register	A storage device with a specific capacity, such as a bit or byte.
reset	A means of bringing a system back to a know state. See *hardware reset* and *software reset*.
resistance	The resistance to the flow of electric current measured in ohms for a conductor.
revision ID	A unique identifier of the PSoC device.
ripple divider	An asynchronous ripple counter constructed of flip-flops. The clock is fed to the first stage of the counter. An n-bit binary counter consisting of n flip-flops that can count in binary from 0 to 2^n - 1.
rising edge	*See positive edge*.
ROM	An acronym for read only memory. A data-storage device from which data can be read out, but new data cannot be written in.
routine	A block of code, called by another block of code, that may have some general or frequent use.
routing	Physically connecting objects in a design according to design rules set in the reference library.
runt pulses	In digital circuits, narrow pulses that, due to non-zero rise and fall times of the signal, do not reach a valid high or low level. For example, a runt pulse may occur when switching between asynchronous clocks or as the result of a race condition in which a signal takes two separate paths through a circuit. These race conditions may have different delays and are then recombined to form a glitch or when the output of a flip-flop becomes metastable.

S

sampling	The process of converting an analog signal into a series of digital values or reversed.
schematic	A diagram, drawing, or sketch that details the elements of a system, such as the elements of an electrical circuit or the elements of a logic diagram for a computer.
seed value	An initial value loaded into a linear feedback shift register or random number generator.
serial	1. Pertaining to a process in which all events occur one after the other. 2. Pertaining to the sequential or consecutive occurrence of two or more related activities in a single device or channel.

set	To force a bit/register to a value of logic 1.
settling time	The time it takes for an output signal or value to stabilize after the input has changed from one value to another.
shift	The movement of each bit in a word one position to either the left or right. For example, if the hex value 0x24 is shifted one place to the left, it becomes 0x48. If the hex value 0x24 is shifted one place to the right, it becomes 0x12.
shift register	A memory storage device that sequentially shifts a word either left or right to output a stream of serial data.
sign bit	The most significant binary digit, or bit, of a signed binary number. If set to a logic 1, this bit represents a negative quantity.
signal	A detectable transmitted energy that can be used to carry information. As applied to electronics, any transmitted electrical impulse.
silicon ID	A unique identifier of the PSoC silicon.
skew	The difference in arrival time of bits transmitted at the same time, in parallel transmission.
slave device	A device that allows another device to control the timing for data exchanges between two devices. Or when devices are cascaded in width, the slave device is the one that allows another device to control the timing of data exchanges between the cascaded devices and an external interface. The controlling device is called the master device.
software	A set of computer programs, procedures, and associated documentation about the operation of a data processing system (for example, compilers, library routines, manuals, and circuit diagrams). Software is often written first as source code, and then converted to a binary format that is specific to the device on which the code will be executed.
software reset	A partial reset executed by software to bring part of the system back to a known state. A software reset will restore the M8CP to a know state but not PSoC blocks, systems, peripherals, or registers. For a software reset, the CPU registers (CPU_A, CPU_F, CPU_PC, CPU_SP, and CPU_X) are set to 0x00. Therefore, code execution will begin at flash address 0x0000.
SRAM	An acronym for static random access memory. A memory device allowing users to store and retrieve data at a high rate of speed. The term static is used because, when a value is loaded into an SRAM cell, it will remain unchanged until it is explicitly altered or until power is removed from the device.
SROM	An acronym for supervisory read only memory. The SROM holds code that is used to boot the device, calibrate circuitry, and perform flash operations. The functions of the SROM may be accessed in normal user code, operating from flash.
stack	A stack is a data structure that works on the principle of Last In First Out (LIFO). This means that the last item put on the stack is the first item that can be taken off.
stack pointer	A stack may be represented in a computer's inside blocks of memory cells, with the bottom at a fixed location and a variable stack pointer to the current top cell.
state machine	The actual implementation (in hardware or software) of a function that can be considered to consist of a set of states through which it sequences.

sticky A bit in a register that maintains its value past the time of the event that caused its transition, has passed.

stop bit A signal following a character or block that prepares the receiving device to receive the next character or block.

switching The controlling or routing of signals in circuits to execute logical or arithmetic operations, or to transmit data between specific points in a network.

switch phasing The clock that controls a given switch, PHI1 or PHI2, in respect to the switch capacitor (SC) blocks. The PSoC SC blocks have two groups of switches. One group of these switches is normally closed during PHI1 and open during PHI2. The other group is open during PHI1 and closed during PHI2. These switches can be controlled in the normal operation, or in reverse mode if the PHI1 and PHI2 clocks are reversed.

synchronous
1. A signal whose data is not acknowledged or acted upon until the next active edge of a clock signal.
2. A system whose operation is synchronized by a clock signal.

T

tap The connection between two blocks of a device created by connecting several blocks/components in a series, such as a shift register or resistive voltage divider.

terminal count The state at which a counter is counted down to zero.

threshold The minimum value of a signal that can be detected by the system or sensor under consideration.

Thumb-2 The Thumb-2 instruction set is a highly efficient and powerful instruction set that delivers significant benefits in terms of ease of use, code size, and performance. The Thumb-2 instruction set is a superset of the previous 16-bit Thumb instruction set, with additional 16-bit instructions alongside 32-bit instructions.

transistors The transistor is a solid-state semiconductor device used for amplification and switching, and has three terminals: a small current or voltage applied to one terminal controls the current through the other two. It is the key component in all modern electronics. In digital circuits, transistors are used as very fast electrical switches, and arrangements of transistors can function as logic gates, RAM-type memory, and other devices. In analog circuits, transistors are essentially used as amplifiers.

tristate A function whose output can adopt three states: 0, 1, and Z (high impedance). The function does not drive any value in the Z state and, in many respects, may be considered to be disconnected from the rest of the circuit, allowing another output to drive the same *net*.

U

UART A UART or universal asynchronous receiver-transmitter translates between parallel bits of data and serial bits.

user The person using the PSoC device and reading this manual.

user modules Pre-build, pre-tested hardware/firmware peripheral functions that take care of managing and configuring the lower level Analog and Digital PSoC Blocks. User Modules also provide high level *API (Application Programming Interface)* for the peripheral function.

user space The bank 0 space of the register map. The registers in this bank are more likely to be modified during normal program execution and not just during initialization. Registers in bank 1 are most likely to be modified only during the initialization phase of the program.

V

V_{DDD} A name for a power net meaning "voltage drain." The most positive power supply signal. Usually 5 or 3.3 volts.

volatile Not guaranteed to stay the same value or level when not in scope.

V_{SS} A name for a power net meaning "voltage source." The most negative power supply signal.

W

watchdog timer A timer that must be serviced periodically. If it is not serviced, the CPU will reset after a specified period of time.

waveform The representation of a signal as a plot of amplitude versus time.

X

XOR See *Boolean Algebra*.