PSoC™ 4 MCU: PSoC™ 4500S

Based on Arm® Cortex®-M0+ CPU

General description

PSoC™ 4 is a scalable and reconfigurable platform architecture for a family of programmable embedded system controllers with an Arm® Cortex®-M0+ CPU. It combines programmable and reconfigurable analog and digital blocks with flexible automatic routing. PSoC™ 4500S is a member of the PSoC™ 4 platform architecture. It is a combination of a microcontroller with standard communication and timing peripherals, a capacitive touch-sensing system (CAPSENSE™) with best-in-class performance, programmable general-purpose continuous-time and switched-capacitor analog blocks, and programmable connectivity. PSoC™ 4500S products will be upward compatible with members of the PSoC™ 4 platform for new applications and design needs.

Features

- 32-bit MCU subsystem
  - 48-MHz Arm Cortex-M0+ CPU with single-cycle multiply
  - Up to 256 KB of flash with Read Accelerator
  - Up to 32 KB of SRAM
  - 8-channel DMA engine
  - Two Divide and Square Root computation accelerators
- Programmable analog
  - Four opamps with reconfigurable high-drive external and high-bandwidth internal drive and Comparator modes and ADC input buffering capability. Opamps can operate in Deep Sleep low-power mode.
  - Two 12-bit 1-Msps SAR ADCs with differential and single-ended modes, and Channel Sequencer with signal averaging. Simultaneous sampling is provided.
  - Single-slope 10-bit ADC function provided by a capacitance sensing block
  - Two current DACs (IDACs) for general-purpose or capacitive sensing applications on any pin
  - Two low-power comparators that operate in Deep Sleep low-power mode
- Programmable digital
  - Programmable logic blocks allowing Boolean operations to be performed on port inputs and outputs
- Low-power 1.71-V to 5.5-V operation
  - Deep Sleep mode with operational analog and 2.5-µA digital system current
- Capacitive sensing
  - Capacitive sigma-delta provides best-in-class signal-to-noise ratio (SNR) (>5:1) and water tolerance
  - Infineon-supplied software component makes capacitive sensing design easy
  - Automatic hardware tuning (SmartSense)
- LCD drive capability
  - LCD segment drive capability on GPIOs
- Motor control accelerator (MCA)
  - Hardware square root and divide block
  - Accelerates execution of Field Oriented Control (FOC) and Power Factor Correction (PFC) Blocks
- Serial communication
  - Five independent run-time reconfigurable Serial Communication Blocks (SCBs) with re-configurable I^2C, SPI, or UART functionality
- Timing and pulse-width modulation
  - Eight 16-bit Timer/Counter/Pulse-Width Modulator (TCPWM) blocks
  - Center-aligned, Edge, and Pseudo-random modes
  - Comparator-based triggering of Kill signals for motor drive and other high-reliability digital logic applications
  - Quadrature decoder

Features

- Up to 53 programmable GPIO pins
  - 48-pin TQFP (0.5-mm pitch), and 64-pin TQFP normal (0.8 mm) and Fine Pitch (0.5 mm) packages
  - Any GPIO pin can be CapSense, analog, or digital
  - Drive modes, strengths, and slew rates are programmable
- Clock sources
  - 4 to 33 MHz external crystal oscillator (ECO)
  - PLL to generate 48-MHz frequency
  - 32-kHz Watch Crystal Oscillator (WCO)
  - ±2% Internal Main Oscillator (IMO)
  - 40-kHz Internal Low-power Oscillator (ILO)
- ModusToolbox™ software
  - Comprehensive collection of multi-platform tools and software libraries
  - Includes board support packages (BSPs), peripheral driver library (PDL), and middleware such as CapSense
- PSoC™ Creator design environment
  - Integrated development environment (IDE) provides schematic design entry and build (with analog and digital automatic routing) with debugging
  - Application programming interface (API) component for all fixed-function and programmable peripherals
- Industry-standard tool compatibility
  - After schematic entry, development can be done with Arm-based industry-standard development tools

Table of contents

General description **1**
Features **1**
Table of contents **3**
1 Development ecosystem **4**
1.1 PSoC™ 4 MCU resources 4
1.2 ModusToolbox™ software 5
1.3 PSoC™ Creator 6
Block diagram **7**
2 Functional definition **8**
2.1 CPU and memory subsystem 8
2.2 System resources 8
2.3 Analog blocks 10
2.4 Programmable digital blocks 11
2.5 Fixed function digital blocks 11
2.6 GPIO 12
2.7 Special function peripherals 13
3 Pinouts **14**
3.1 Alternate pin functions 15
4 Power **18**
4.1 Mode 1: 1.8 V to 5.5 V external supply 18
4.2 Mode 2: 1.8 V ±5% external supply 18
5 Electrical specifications **20**
5.1 Absolute maximum ratings 20
5.2 Device-level specifications 20
5.3 Analog peripherals 24
5.4 Digital peripherals 33
5.5 Memory 36
5.6 System resources 37
6 Ordering information **41**
7 Packaging **43**
7.1 Package diagrams 44
8 Acronyms **46**
9 Document conventions **50**
9.1 Units of measure 50
Revision history **51**

1 Development ecosystem

1.1 PSoC™ 4 MCU resources

Infineon provides a wealth of data at **www.infineon.com** to help you select the right PSoC™ device and quickly and effectively integrate it into your design. The following is an abbreviated, hyperlinked list of resources for PSoC™ 4 MCU:

- **Overview: PSoC™ Portfolio**, **PSoC™ Roadmap**
- **Product Selectors: PSoC™ 4 MCU**
- **Application notes** cover a broad range of topics, from basic to advanced level, and include the following:
  - **AN79953**: Getting Started With PSoC™ 4. This application note has a convenient flow chart to help decide which IDE to use: **ModusToolbox™ software** or **PSoC™ Creator**.
  - **AN91184:** PSoC™ 4 BLE - Designing BLE Applications
  - **AN88619:** PSoC™ 4 Hardware Design Considerations
  - **AN73854:** PSoC™ - Introduction to bootloaders
  - **AN89610:** PSoC™ Arm® Cortex® Code Optimization
  - **AN86233:** PSoC™ 4 MCU low-power modes and power reduction techniques
  - **AN57821:** PSoC™ 3, PSOC™ 4, and PSOC™ 5LP mixed-signal circuit board layout considerations
  - **AN85951**: PSoC™ 4 and PSoC™ 6 MCU CAPSENSE™ Design Guide
- **Code examples** demonstrate product features and usage, and are also available on **Infineon GitHub repositories.**
- **Technical reference manuals (TRMs)** provide detailed descriptions of PSoC™ 4 MCU architecture and registers.
- **PSoC™ 4 MCU Programming Specification** provides the information necessary to program PSoC™ 4 MCU nonvolatile memory.
- **Development tools**
  - **ModusToolbox™ software** enables cross platform code development with a robust suite of tools and software libraries.
  - **PSoC™ Creator** is a free Windows-based IDE. It enables concurrent hardware and firmware design of PSoC™ 3, PSoC™ 4, PSoC™ 5LP, and PSoC™ 6 MCU based systems. Applications are created using schematic capture and over 150 pre-verified, production-ready peripheral Components.
  - **CY8CKIT-045S** PSoC™ 4500S Pioneer Kit is a low-cost hardware platform that enables design and debug of the PSoC™ 4500S device.
  - **MiniProg4** and **MiniProg3** all-in-one development programmers and debuggers.
  - **PSoC™ 4 MCU CAD libraries** provide footprint and schematic support for common tools**. IBIS models** are also available
- **Training videos** are available on a wide range of topics including the **PSoC™ 4 MCU 101 series**.
- **Infineon Developer Community** enables connection with fellow PSoC™ developers around the world, 24 hours a day, 7 days a week, and hosts a dedicated **PSoC™ 4 MCU Community**.

1.2 ModusToolbox™ software

ModusToolbox™ software is a comprehensive collection of multi-platform tools and software libraries that enable an immersive development experience for creating converged MCU and wireless systems. It is:

- Comprehensive - it has the resources you need
- Flexible - you can use the resources in your own workflow
- Atomic - you can get just the resources you want

Infineon provides a large collection of code **repositories on GitHub**, including:

- Board support packages (BSPs) aligned with Infineon kits
- Low-level resources, including a peripheral driver library (PDL)
- Middleware enabling industry-leading features such as CapSense
- An extensive set of thoroughly tested **code example applications**

ModusToolbox™ Software is IDE-neutral and easily adaptable to your workflow and preferred development environment. It includes a project creator, peripheral and library configurators, a library manager, as well as the optional Eclipse IDE for ModusToolbox™, as **Figure 1** shows. For information on using Infineon tools, refer to the documentation delivered with ModusToolbox™ software, and **AN79953: Getting Started with PSoC™ 4**.

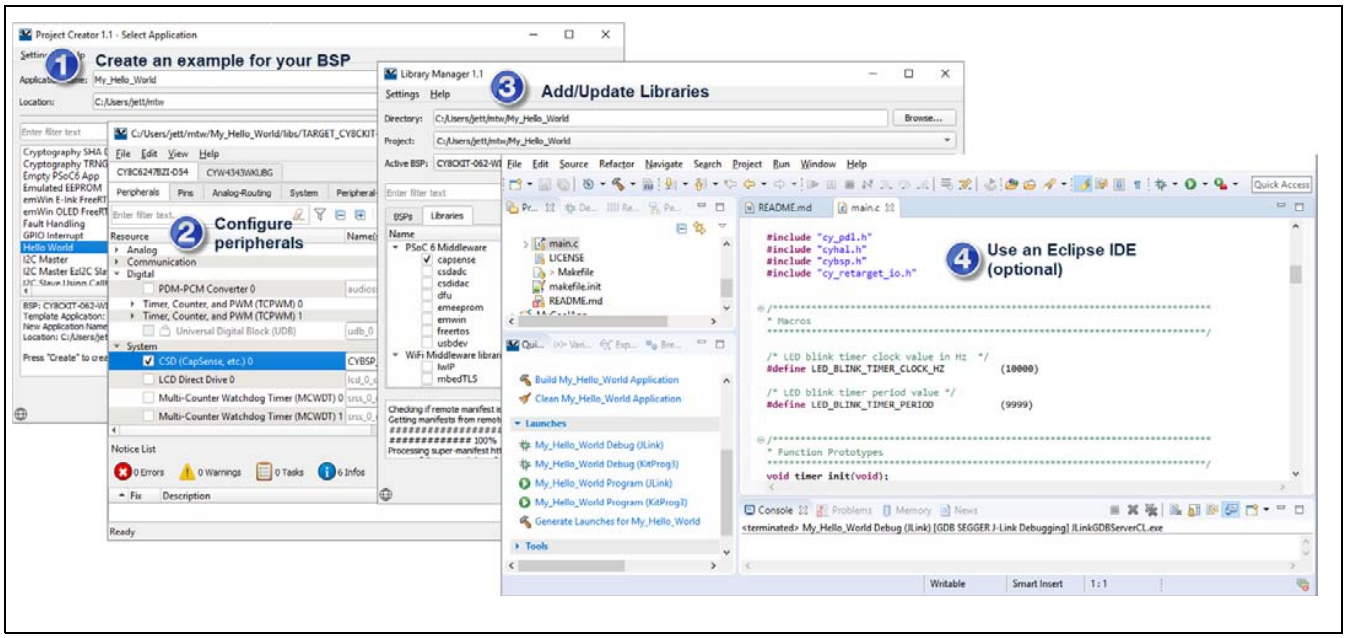

Figure 1 ModusToolbox™ software tools

1.3 PSoC™ Creator

PSoC™ Creator is a free Windows-based IDE. It enables you to design hardware and firmware systems concurrently, based on PSoC™ 4 MCU. As **Figure 2** shows, with PSoC™ Creator you can:

1. Explore the library of 200+ Components
2. Drag and drop Component icons to complete your hardware system design in the main design workspace
3. Configure Components using the Component configuration tools and the Component datasheets
4. Co-design your application firmware and hardware in the PSoC™ Creator IDE or build a project for a third-party IDE
5. Prototype your solution with the PSoC™ 4 Pioneer kits. If a design change is needed, PSoC™ Creator and Components enable you to make changes on-the-fly without the need for hardware revisions.

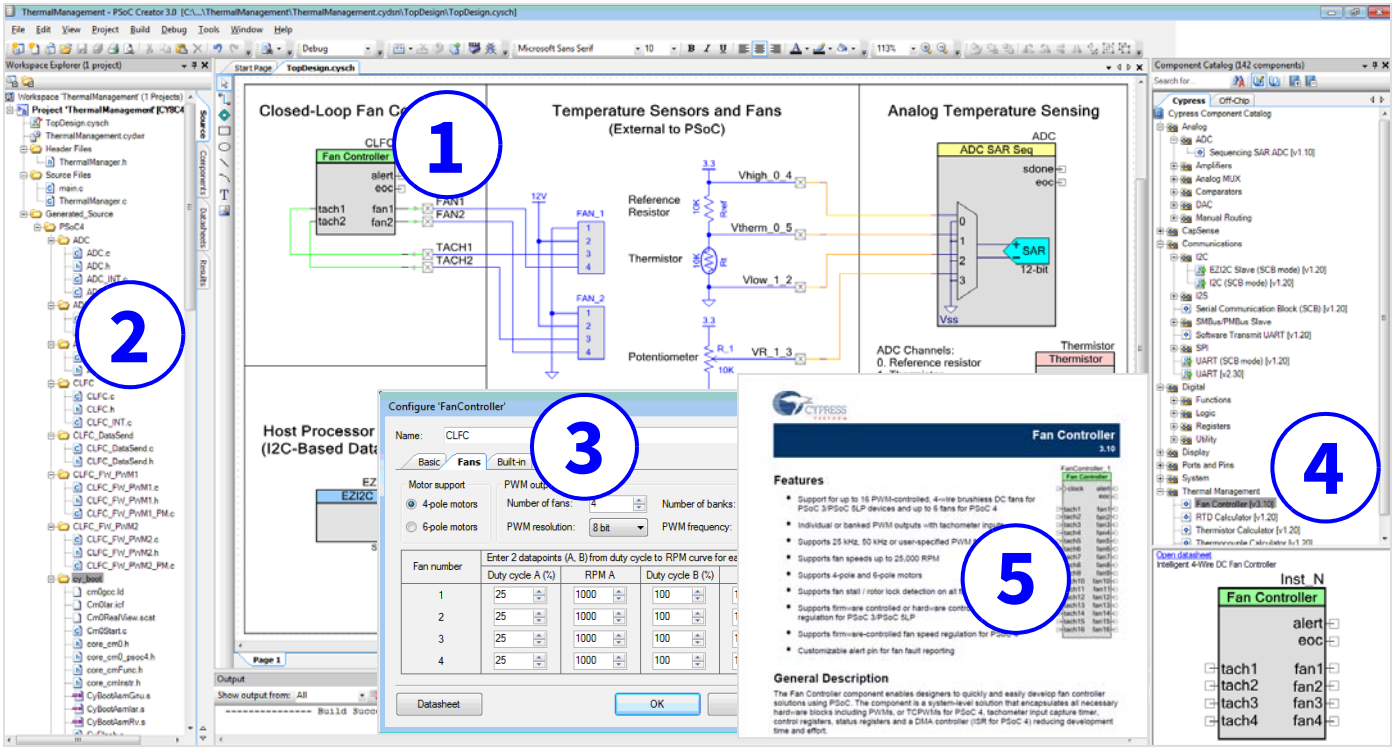

Figure 2 Multiple-sensor example project in PSoC™ Creator

Block diagram

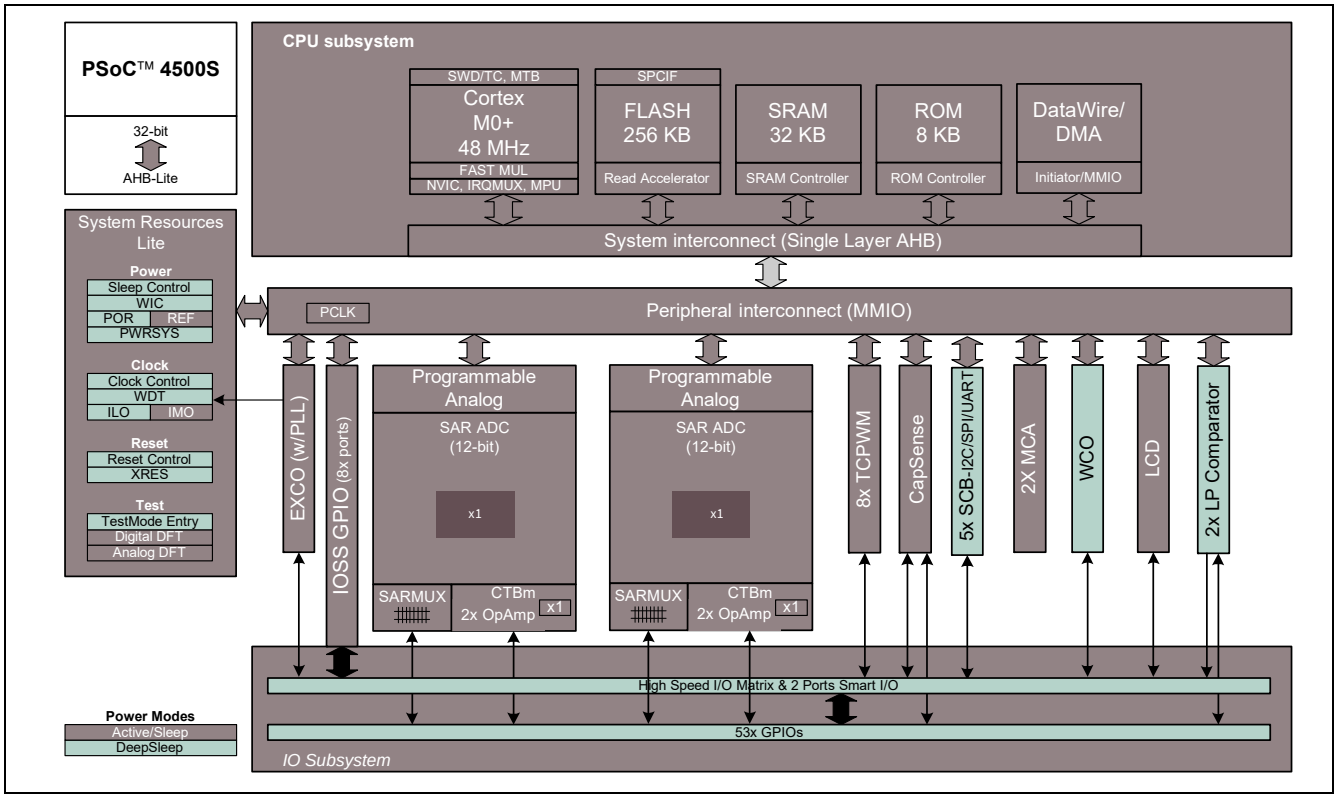

This device includes extensive support for programming, testing, debugging, and tracing both hardware and firmware.

The Arm® Serial-Wire Debug (SWD) interface supports all programming and debug features of the device.

Complete debug-on-chip functionality enables full-device debugging in the final system using the standard production device. It does not require special interfaces, debugging pods, simulators, or emulators. Only the standard programming connections are required to fully support debug.

The PSoC™ Creator IDE provides fully integrated programming and debug support for this device. The SWD interface is fully compatible with industry-standard third-party tools. This device provides a level of security not possible with multi-chip application solutions or with microcontrollers. It has the following advantages:

- Allows disabling of debug features
- Robust flash protection
- Allows customer-proprietary functionality to be implemented in on-chip programmable blocks

The debug circuits are enabled by default and can be disabled in firmware. If they are not enabled, the only way to re-enable them is to erase the entire device, clear flash protection, and reprogram the device with new firmware that enables debugging. Thus firmware control of debugging cannot be over-ridden without erasing the firmware thus providing security.

Additionally, all device interfaces can be permanently disabled (device security) for applications concerned about phishing attacks due to a maliciously reprogrammed device or attempts to defeat security by starting and interrupting flash programming sequences. All programming, debug, and test interfaces are disabled when maximum device security is enabled. Therefore, this device, with device security enabled, may not be returned for failure analysis. This is a trade-off it allows the customer to make.

2 Functional definition

2.1 CPU and memory subsystem

2.1.1 CPU

The Cortex®-M0+ CPU in PSoC™ 4500S is part of the 32-bit MCU subsystem, which is optimized for low-power operation with extensive clock gating. Most instructions are 16 bits in length and the CPU executes a subset of the Thumb-2 instruction set. It includes a nested vectored interrupt controller (NVIC) block with eight interrupt inputs and also includes a Wakeup Interrupt Controller (WIC). The WIC can wake the processor from Deep Sleep mode, allowing power to be switched off to the main processor when the chip is in Deep Sleep mode.

Two Divide and Square Root compute accelerators (MCA) are provided to speed up computation of control loops for applications such as motor and power control. Two blocks are provided so that each may be independently used by the Field-Oriented-Control (FOC) and Power Factor Control (PFC) Control loops, which are interrupt-driven and asynchronous processes. Using two blocks eliminates any possibility of MCA operations either blocking or being corrupted by interrupts arriving at critical times.

The CPU subsystem includes an 8-channel DMA engine and also includes a debug interface, the serial wire debug (SWD) interface, which is a two-wire form of JTAG. The debug configuration used for PSoC™ 4500S has four break-point (address) comparators and two watchpoint (data) comparators.

2.1.2 Flash

The PSoC™ 4500S device has a 256 KB flash module with a flash accelerator, tightly coupled to the CPU to improve average access times from the flash block. The low-power flash block is designed to deliver two wait-state (WS) access time at 48 MHz. The flash accelerator delivers 85% of single-cycle SRAM access performance on average.

2.1.3 SRAM

32 KB of SRAM are provided with zero wait-state access at 48 MHz.

2.1.4 SROM

An 8-KB supervisory ROM that contains boot and configuration routines is provided.

2.2 System resources

2.2.1 Power system

The power system is described in detail in the section **Power**. It provides assurance that voltage levels are as required for each respective mode and either delays mode entry (for example, on power-on reset (POR)) until voltage levels are as required for proper functionality, or generates resets (for example, on brown-out detection). PSoC™ 4500S operates with a single external supply over the range of either 1.8 V ±5% (externally regulated) or 1.8 to 5.5 V (internally regulated) and has three different power modes, transitions between which are managed by the power system. PSoC™ 4500S provides Active, Sleep, and Deep Sleep low-power modes.

All subsystems are operational in Active mode. The CPU subsystem (CPU, flash, and SRAM) is clock-gated off in Sleep mode, while all peripherals and interrupts are active with instantaneous wake-up on a wake-up event. In Deep Sleep mode, the high-speed clock and associated circuitry is switched off; wake-up from this mode takes 35 µs. The opamps can remain operational in Deep Sleep mode.

2.2.2 Clock system

The PSoC™ 4500S clock system is responsible for providing clocks to all subsystems that require clocks and for switching between different clock sources without glitching. In addition, the clock system ensures that there are no metastable conditions.

The clock system for the PSoC™ 4500S consists of the IMO, ILO, a 32-kHz Watch Crystal Oscillator (WCO), MHz ECO and PLL, and provision for an external clock. The WCO block allows locking the IMO to the 32-kHz oscillator.

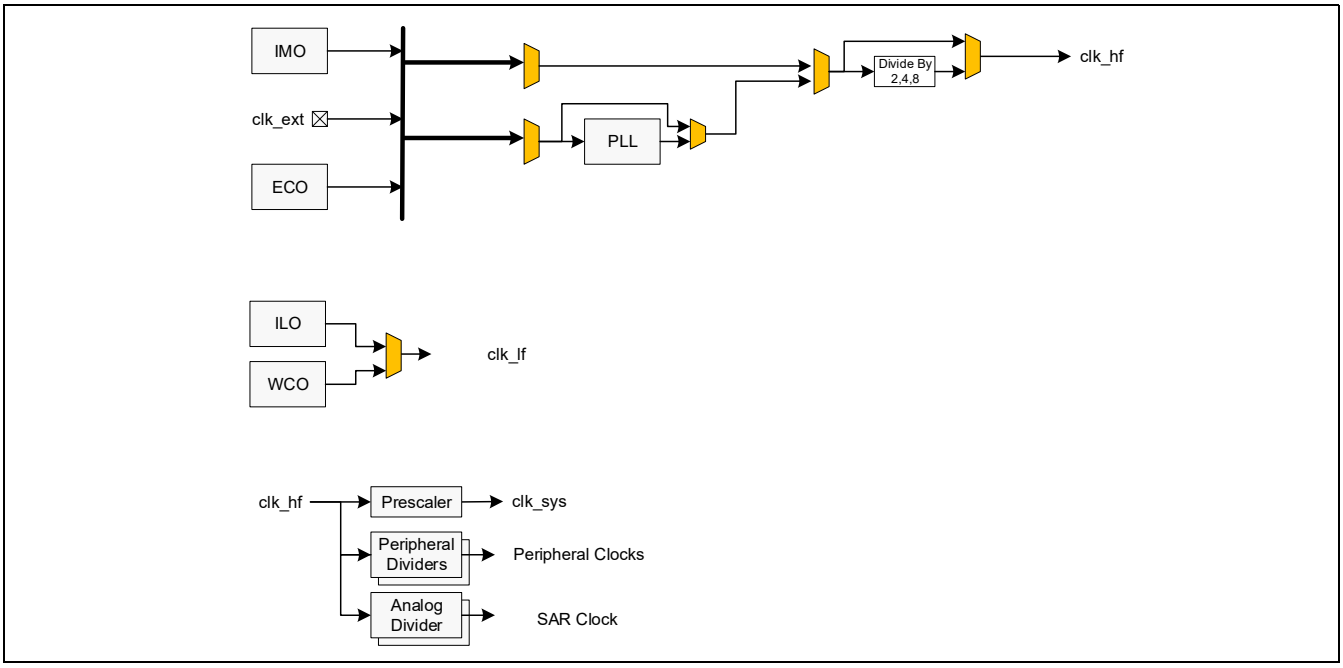

Figure 3 MCU clocking architecture

The HFCLK signal can be divided down as shown to generate synchronous clocks for the analog and digital peripherals. There are 18 clock dividers for the PSoC™ 4500S (six with fractional divide capability, twelve with integer divide only). There are 12 16-bit dividers allowing a lot of flexibility in generating fine-grained frequencies.

In addition, there are five 16-bit fractional dividers and one 24-bit fractional divider.

2.2.3 IMO clock source

The IMO is the primary source of internal clocking in the PSoC™ 4500S. It is trimmed during testing to achieve the specified accuracy.The IMO default frequency is 24 MHz and it can be adjusted from 24 to 48 MHz in steps of 4 MHz. The IMO tolerance with Infineon-provided calibration settings is ±2% over the entire voltage and temperature range.

2.2.4 ILO clock source

The ILO is a very low power, nominally 40-kHz oscillator, which is primarily used to generate clocks for the watchdog timer (WDT) and peripheral operation in Deep Sleep mode. ILO-driven counters can be calibrated to the IMO to improve accuracy. Infineon provides a software component, which does the calibration.

2.2.5 Watch Crystal Oscillator (WCO)

The PSoC™ 4500S clock subsystem also implements a low-frequency (32-kHz watch crystal) oscillator that can be used for precision timing applications. The WCO block allows locking the IMO to the 32 kHz oscillator.

2.2.6 External Crystal Oscillators (ECO)

The PSoC™ 4500S also implements a 4 to 33 MHz crystal oscillator.

2.2.7 Watchdog timer and counters

A watchdog timer is implemented in the clock block running from the ILO; this allows watchdog operation during Deep Sleep and generates a watchdog reset if not serviced before the set timeout occurs. The watchdog reset is recorded in a Reset Cause register, which is firmware readable. The Watchdog counters can be used to implement a Real-Time clock using the 32-kHz WCO. The WCO block allows locking the IMO to the 32 kHz oscillator.

2.2.8 Reset

PSoC™ 4500S can be reset from a variety of sources including a software reset. Reset events are asynchronous and guarantee reversion to a known state. The reset cause is recorded in a register, which is sticky through reset and allows software to determine the cause of the reset. An XRES pin is reserved for external reset by asserting it active low. The XRES pin has an internal pull-up resistor that is always enabled.

2.3 Analog blocks

2.3.1 12-bit SAR ADC

The 12-bit, 1-Msps SAR ADC can operate at a maximum clock rate of 18 MHz and requires a minimum of 18 clocks to do a 12-bit conversion.

The sample-and-hold (S/H) aperture is programmable allowing the gain bandwidth requirements of the amplifier driving the SAR inputs, which determine its settling time, to be relaxed if required. It is possible to provide an external bypass (through a fixed pin location) for the internal reference amplifier.

The SAR is connected to a fixed set of pins through an 8-input sequencer. The sequencer cycles through selected channels autonomously (sequencer scan) with zero switching overhead (that is, aggregate sampling bandwidth is equal to 1 Msps whether it is for a single channel or distributed over several channels). The sequencer switching is effected through a state machine or through firmware driven switching. A feature provided by the sequencer is buffering of each channel to reduce CPU interrupt service requirements. To accommodate signals with varying source impedance and frequency, it is possible to have different sample times programmable for each channel. Also, signal range specification through a pair of range registers (low and high range values) is implemented with a corresponding out-of-range interrupt if the digitized value exceeds the programmed range; this allows fast detection of out-of-range values without the necessity of having to wait for a sequencer scan to be completed and the CPU to read the values and check for out-of-range values in software.

The SAR is not available in Deep Sleep mode as it requires a high-speed clock (up to 18 MHz). The SAR operating range is 1.71 V to 5.5 V. There are two SAR ADC blocks in the PSoC™ 4500S.

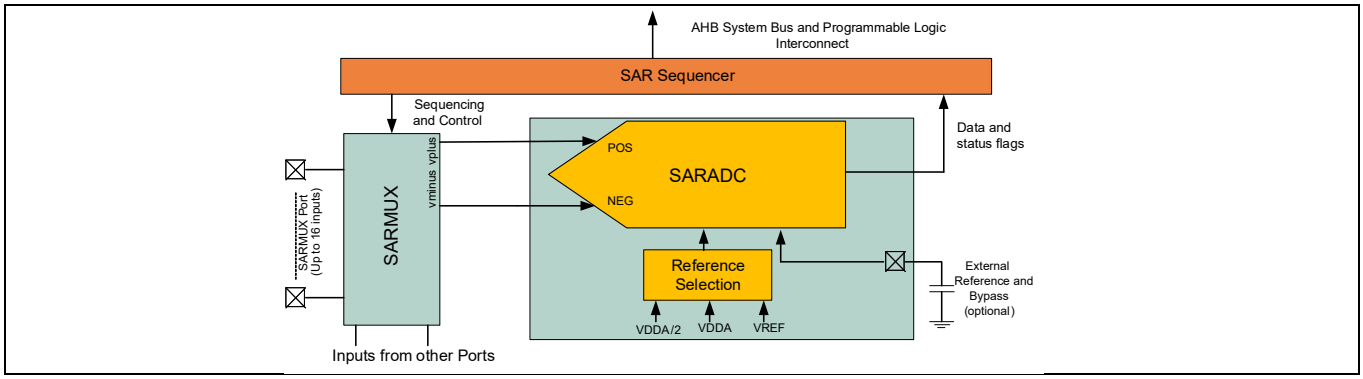

Figure 4 SAR ADC

2.3.2 Opamps (continuous-time block; CTB)

PSoC™ 4500S has four opamps with Comparator modes which allow most common analog functions to be performed on-chip eliminating external components; PGAs, Voltage Buffers, Filters, Trans-Impedance Amplifiers, and other functions can be realized, in some cases with external passives. saving power, cost, and space. The on-chip opamps are designed with enough bandwidth to drive the Sample-and-Hold circuit of the ADC without requiring external buffering. One of the opamps is connected only as an internal buffer to drive one of the SAR ADCs.

2.3.3 Low-power comparators (LPC)

PSoC™ 4500S has a pair of low-power comparators, which can also operate in low power modes. This allows the analog system blocks to be disabled while retaining the ability to monitor external voltage levels during low-power modes. The comparator outputs are normally synchronized to avoid metastability unless operating in an asynchronous power mode where the system wake-up circuit is activated by a comparator switch event. The LPC outputs can be routed to pins.

2.3.4 Current DACs

PSoC™ 4500S has two 7-bit IDACs, which can drive any of the pins on the chip. These IDACs have programmable current ranges.

2.3.5 Analog multiplexed buses

PSoC™ 4500S has two concentric independent buses that go around the periphery of the chip. These buses (called amux buses) are connected to firmware-programmable analog switches that allow the chip's internal resources (IDACs, comparator) to connect to any pin on the I/O ports.

2.4 Programmable digital blocks

2.4.1 Smart I/O block

The Smart I/O block is a fabric of switches and LUTs that allows Boolean functions to be performed in signals being routed to the pins of a GPIO port. The Smart I/O can perform logical operations on input pins to the chip and on signals going out as outputs. There are two Smart I/O blocks in the PSoC™ 4500S.

2.5 Fixed function digital blocks

2.5.1 Timer/Counter/PWM (TCPWM) block

The TCPWM block consists of a 16-bit counter with user-programmable period length. There is a capture register to record the count value at the time of an event (which may be an I/O event), a period register that is used to either stop or auto-reload the counter when its count is equal to the period register, and compare registers to generate compare value signals that are used as PWM duty cycle outputs. The block also provides true and complementary outputs with programmable offset between them to allow use as dead-band programmable complementary PWM outputs. It also has a Kill input to force outputs to a predetermined state; for example, this is used in motor drive systems when an over-current state is indicated and the PWM driving the FETs needs to be shut off immediately with no time for software intervention. Each block also incorporates a Quadrature decoder. There are eight TCPWM blocks in PSoC™ 4500S.

2.5.2 Serial Communication Block (SCB)

PSoC™ 4500S has five serial communication blocks, which can be programmed to have SPI, I^2C, or UART functionality.

I^2C Mode: The hardware I^2C block implements a full multi-master and slave interface (it is capable of multi-master arbitration). This block is capable of operating at speeds of up to 400 kbps (Fast Mode) and has flexible buffering options to reduce interrupt overhead and latency for the CPU. It also supports EZI2C that creates a mailbox address range in the memory of PSoC™ 4500S and effectively reduces I^2C communication to reading from and writing to an array in memory. In addition, the block supports an 8-deep FIFO for receive and transmit which, by increasing the time given for the CPU to read data, greatly reduces the need for clock stretching caused by the CPU not having read data on time.

The I^2C peripheral is compatible with the I^2C Standard-mode and Fast-mode devices as defined in the NXP I^2C-bus specification and user manual (UM10204). The I^2C bus I/O is implemented with GPIO in open-drain modes.

PSoC™ 4500S is not completely compliant with the I^2C spec in the following respect:

- GPIO cells are not overvoltage tolerant and, therefore, cannot be hot-swapped or powered up independently of the rest of the I^2C system.

UART Mode: This is a full-feature UART operating at up to 1 Mbps. It supports automotive single-wire interface (LIN), infrared interface (IrDA), and SmartCard (ISO7816) protocols, all of which are minor variants of the basic UART protocol. In addition, it supports the 9-bit multiprocessor mode that allows addressing of peripherals connected over common RX and TX lines. Common UART functions such as parity error, break detect, and frame error are supported. An 8-deep FIFO allows much greater CPU service latencies to be tolerated.

SPI Mode: The SPI mode supports full Motorola SPI, TI SSP (adds a start pulse used to synchronize SPI Codecs), and National Microwire (half-duplex form of SPI). The SPI block can use the FIFO.

2.6 GPIO

PSoC™ 4500S has up to 53 GPIOs. The GPIO block implements the following:

- Eight drive modes:
  - Analog input mode (input and output buffers disabled)
  - Input only
  - Weak pull-up with strong pull-down
  - Strong pull-up with weak pull-down
  - Open drain with strong pull-down
  - Open drain with strong pull-up
  - Strong pull-up with strong pull-down
  - Weak pull-up with weak pull-down
- Input threshold select (CMOS or LVTTL).
- Individual control of input and output buffer enabling/disabling in addition to the drive strength modes
- Selectable slew rates for dV/dt related noise control to improve EMI

The pins are organized in logical entities called ports, which are 8-bit in width (less for Ports 5 and 6). During power-on and reset, the blocks are forced to the disable state so as not to crowbar any inputs and/or cause excess turn-on current. A multiplexing network known as a high-speed I/O matrix is used to multiplex between various signals that may connect to an I/O pin.

Data output and pin state registers store, respectively, the values to be driven on the pins and the states of the pins themselves.

Every I/O pin can generate an interrupt if so enabled and each I/O port has an interrupt request (IRQ) and interrupt service routine (ISR) vector associated with it.

2.7 Special function peripherals

2.7.1 CAPSENSE™

CAPSENSE™ is supported in the PSoC™ 4500S through a capacitive sigma-delta block that can be connected to any pins through an analog multiplex bus via analog switches. CAPSENSE™ function can thus be provided on any available pin or group of pins in a system under software control. A PSoC™ Creator component is provided for the CAPSENSE™ block to make it easy for the user.

Shield voltage can be driven on another analog multiplex bus to provide water-tolerance capability. Water tolerance is provided by driving the shield electrode in phase with the sense electrode to keep the shield capacitance from attenuating the sensed input. Proximity sensing can also be implemented.

The CAPSENSE™ block has two IDACs, which can be used for general purposes if CAPSENSE™ is not being used (both IDACs are available in that case) or if CAPSENSE™ is used without water tolerance (one IDAC is available).

The CAPSENSE™ block also provides a 10-bit Slope ADC function which can be used in conjunction with the CAPSENSE™ function.

The CAPSENSE™ block is an advanced, low-noise, programmable block with programmable voltage references and current source ranges for improved sensitivity and flexibility. It can also use an external reference voltage. It has a full-wave CSD mode that alternates sensing to VDDA and ground to null out power-supply related noise.

2.7.2 LCD segment drive

PSoC™ 4500S has an LCD controller, which can drive up to 4 commons and up to 50 segments. Any pin can be either a common or a segment pin. It uses full digital methods to drive the LCD segments requiring no generation of internal LCD voltages. The two methods used are referred to as Digital Correlation and PWM. Digital correlation pertains to modulating the frequency and drive levels of the common and segment signals to generate the highest RMS voltage across a segment to light it up or to keep the RMS signal to zero. This method is good for STN displays but may result in reduced contrast with TN (cheaper) displays. PWM pertains to driving the panel with PWM signals to effectively use the capacitance of the panel to provide the integration of the modulated pulse-width to generate the desired LCD voltage. This method results in higher power consumption but can result in better results when driving TN displays.

3 Pinouts

The following table provides the pin list for PSoC™ 4500S for the 48-pin TQFP and 64-pin TQFP normal and fine pitch packages.

64-TQFP		48-TQFP	
Pin	**Name**	**Pin**	**Name**
39	P0.0	28	P0.0
40	P0.1	29	P0.1
41	P0.2	30	P0.2
42	P0.3	31	P0.3
43	P0.4	32	P0.4
44	P0.5	33	P0.5
45	P0.6	34	P0.6
46	P0.7	35	P0.7
47	XRES	36	XRES
48	VCCD	37	VCCD
49	VSSD	38	VSSD
50	VDDD	39	VDDD
51	P5.0		
52	P5.1		
53	P5.2		
54	P5.3		
55	P5.5		
56	VDDA	40	VDDA
57	VSSA	41	VSSA
58	P1.0	42	P1.0
59	P1.1	43	P1.1
60	P1.2	44	P1.2
61	P1.3	45	P1.3
62	P1.4	46	P1.4
63	P1.5	47	P1.5
64	P1.6	48	P1.6
1	P1.7	1	P1.7
2	P2.0	2	P2.0
3	P2.1	3	P2.1
4	P2.2	4	P2.2
5	P2.3	5	P2.3
6	P2.4	6	P2.4
7	P2.5	7	P2.5
8	P2.6	8	P2.6
9	P2.7	9	P2.7
10	VSSD	10	VSSD
11	VDDA	11	VSSA
		12	P6.5
12	VSSA		
13	P6.1		
14	P6.2		
15	P6.4		
16	P6.5		
17	VSSD		
18	P3.0	13	P3.0
19	P3.1	14	P3.1
20	P3.2	15	P3.2
21	P3.3	16	P3.3
22	P3.4	17	P3.4
23	P3.5	18	P3.5
24	P3.6	19	P3.6
25	P3.7	20	P3.7
26	VDDD	21	VDDD
27	P4.0	22	P4.0
28	P4.1	23	P4.1
29	P4.2	24	P4.2
30	P4.3	25	P4.3
31	P4.4		
32	P4.5		
33	P4.6		
34	P4.7		
35	P5.6		
36	P5.7		
37	P7.0	26	P7.0
38	P7.1	27	P7.1

Descriptions of the power pins are as follows:

VDDD: Power supply for the digital section.

VDDA: Power supply for the analog section.

VSSD, VSSA: Ground pins for the digital and analog sections respectively.

VCCD: Regulated digital supply (1.8 V ±5%)

GPIOs by package:

	64-TQFP	48-TQFP
Number	53	39

3.1 Alternate pin functions

Each Port pin has can be assigned to one of multiple functions; it can, for example, be an analog I/O, a digital peripheral function, an LCD pin, or a CapSense pin. The pin assignments are shown in the following table.

Name	Analog	Smart I/O	ACT #0	ACT #1	ACT #3	DS #2	DS #3
P0.0	lpcomp.in_p[0]			tcpwm.tr_in[0]	scb[2].uart_cts:0	scb[2].i2c_scl:0	scb[0].spi_select1:0
P0.1	lpcomp.in_n[0]			tcpwm.tr_in[1]	scb[2].uart_rts:0	scb[2].i2c_sda:0	scb[0].spi_select2:0
P0.2	lpcomp.in_p[1]						scb[0].spi_select3:0
P0.3	lpcomp.in_n[1]						scb[2].spi_select0:1
P0.4	wco_in			scb[1].uart_rx:0	scb[2].uart_rx:0	scb[1].i2c_scl:0	scb[1].spi_mosi:1
P0.5	wco_out			scb[1].uart_tx:0	scb[2].uart_tx:0	scb[1].i2c_sda:0	scb[1].spi_miso:1
P0.6	eco_in		ext_clk	scb[1].uart_cts:0	scb[2].uart_tx:1		scb[1].spi_clk:1
P0.7	eco_out		tcpwm.line[0]:3	scb[1].uart_rts:0			scb[1].spi_select0:1
P5.0			tcpwm.line[4]:2		scb[2].uart_rx:1	scb[2].i2c_scl:1	scb[2].spi_mosi:0
P5.1			tcpwm.line_-compl[4]:2		scb[2].uart_tx:2	scb[2].i2c_sda:1	scb[2].spi_miso:0
P5.2			tcpwm.line[5]:2		scb[2].uart_cts:1	lpcomp.comp[0]:2	scb[2].spi_clk:0
P5.3			tcpwm.line_-compl[5]:2		scb[2].uart_rts:1	lpcomp.comp[1]:0	scb[2].spi_select0:0
P5.5			tcpwm.line_-compl[6]:2				scb[2].spi_select2:0
P1.0	pass[0].ctb0_oa0+		tcpwm.line[2]:1	scb[0].uart_rx:1		scb[0].i2c_scl:0	scb[0].spi_mosi:1
P1.1	pass[0].ctb0_oa0-		tcpwm.line_-compl[2]:1	scb[0].uart_tx:1		scb[0].i2c_sda:0	scb[0].spi_miso:1
P1.2	pass[0].ctb0_oa0_out		tcpwm.line[3]:1	scb[0].uart_cts:1	tcpwm.tr_in[2]	scb[2].i2c_scl:2	scb[0].spi_clk:1
P1.3	pass[0].ctb0_oa1_out		tcpwm.line_-compl[3]:1	scb[0].uart_rts:1	tcpwm.tr_in[3]	scb[2].i2c_sda:2	scb[0].spi_select0:1
P1.4	pass[0].ctb0_oa1-		tcpwm.line[6]:1			scb[3].i2c_scl:0	scb[0].spi_select1:1
P1.5	pass[0].ctb0_oa1+		tcpwm.line_-compl[6]:1			scb[3].i2c_sda:0	scb[0].spi_select2:1
P1.6	pass[0].ctb0_oa0+		tcpwm.line[7]:1				scb[0].spi_select3:1

Name	Analog	Smart I/O	ACT #0	ACT #1	ACT #3	DS #2	DS #3
P1.7	pass[0].ctb0_oa1+ pass[0].sar_ext_vref		tcpwm.line_-compl[7]:1				scb[2].spi_clk:1
P2.0	pass[0].sarmux_pads[0]	prgio[0].io[0]	tcpwm.line[4]:0	csd.comp	tcpwm.tr_in[4]	scb[1].i2c_scl:1	scb[1].spi_mosi:2
P2.1	pass[0].sarmux_pads[1]	prgio[0].io[1]	tcpwm.line_-compl[4]:0		tcpwm.tr_in[5]	scb[1].i2c_sda:1	scb[1].spi_miso:2
P2.2	pass[0].sarmux_pads[2]	prgio[0].io[2]	tcpwm.line[5]:1				scb[1].spi_clk:2
P2.3	pass[0].sarmux_pads[3]	prgio[0].io[3]	tcpwm.line_-compl[5]:1				scb[1].spi_select0:2
P2.4	pass[0].sarmux_pads[4]	prgio[0].io[4]	tcpwm.line[0]:1	scb[3].uart_rx:1			scb[1].spi_select1:1
P2.5	pass[0].sarmux_pads[5]	prgio[0].io[5]	tcpwm.line_-compl[0]:1	scb[3].uart_tx:1			scb[1].spi_select2:1
P2.6	pass[0].sarmux_pads[6]	prgio[0].io[6]	tcpwm.line[1]:1	scb[3].uart_cts:1			scb[1].spi_select3:1
P2.7	pass[0].sarmux_pads[7]	prgio[0].io[7]	tcpwm.line_-compl[1]:1	scb[3].uart_rts:1		lpcomp.comp[0]:0	scb[2].spi_mosi:1
P6.1	pass[1].ctb0_oa0+		tcpwm.line_-compl[4]:1	scb[3].uart_tx:0		scb[3].i2c_sda:1	scb[3].spi_miso:0
P6.2	pass[1].ctb0_oa0-		tcpwm.line[5]:0	scb[3].uart_cts:0			scb[3].spi_clk:0
P6.4	pass[1].ctb0_oa0_out		tcpwm.line[6]:3			scb[4].i2c_scl	scb[3].spi_select1:1
P6.5	pass[1].ctb0_oa0+ pass[1].sar_ext_vref		tcpwm.line_-compl[6]:3			scb[4].i2c_sda	scb[3].spi_select2:1
P3.0	pass[1].sarmux_pads[0]	prgio[1].io[0]	tcpwm.line[0]:0	scb[1].uart_rx:1		scb[1].i2c_scl:2	scb[1].spi_mosi:0
P3.1	pass[1].sarmux_pads[1]	prgio[1].io[1]	tcpwm.line_-compl[0]:0	scb[1].uart_tx:1		scb[1].i2c_sda:2	scb[1].spi_miso:0
P3.2	pass[1].sarmux_pads[2]	prgio[1].io[2]	tcpwm.line[1]:0	scb[1].uart_cts:1		cpuss.swd_data	scb[1].spi_clk:0
P3.3	pass[1].sarmux_pads[3]	prgio[1].io[3]	tcpwm.line_-compl[1]:0	scb[1].uart_rts:1		cpuss.swd_clk	scb[1].spi_select0:0
P3.4	pass[1].sarmux_pads[4]	prgio[1].io[4]	tcpwm.line[2]:0		tcpwm.tr_in[6]		scb[1].spi_select1:0
P3.5	pass[1].sarmux_pads[5]	prgio[1].io[5]	tcpwm.line_-compl[2]:0				scb[1].spi_select2:0
P3.6	pass[1].sarmux_pads[6]	prgio[1].io[6]	tcpwm.line[3]:0			scb[4].spi_select3	scb[1].spi_select3:0

Name	Analog	Smart I/O	ACT #0	ACT #1	ACT #3	DS #2	DS #3
P3.7	pass[1].sarmux_pads[7]	prgio[1].io[7]	tcpwm.line_-compl[3]:0			lpcomp.comp[1]:1	scb[2].spi_miso:1
P4.0	csd.vref_ext			scb[0].uart_rx:0		scb[0].i2c_scl:1	scb[0].spi_mosi:0
P4.1	csd.cshield			scb[0].uart_tx:0		scb[0].i2c_sda:1	scb[0].spi_miso:0
P4.2	csd.cmod			scb[0].uart_cts:0		lpcomp.comp[0]:1	scb[0].spi_clk:0
P4.3	csd.csh_tank			scb[0].uart_rts:0		lpcomp.comp[1]:2	scb[0].spi_select0:0
P4.4				scb[4].uart_rx		scb[4].spi_mosi	scb[0].spi_select1:2
P4.5				scb[4].uart_tx		scb[4].spi_miso	scb[0].spi_select2:2
P4.6			tcpwm.line[6]:0	scb[4].uart_cts		scb[4].spi_clk	scb[0].spi_select3:2
P4.7			tcpwm.line_-compl[6]:0	scb[4].uart_rts		scb[4].spi_select0	scb[3].spi_select2:0
P5.6			tcpwm.line[7]:0			scb[4].spi_select1	scb[2].spi_select3:0
P5.7			tcpwm.line_-compl[7]:0			scb[4].spi_select2	scb[3].spi_select1:0
P7.0			tcpwm.line[0]:2	scb[3].uart_rx:2		scb[3].i2c_scl:2	scb[3].spi_mosi:1
P7.1			tcpwm.line_-compl[0]:2	scb[3].uart_tx:2		scb[3].i2c_sda:2	scb[3].spi_miso:1

4 Power

The following power system diagram shows the set of power supply pins as implemented for PSoC™ 4500S. The system has one regulator in Active mode for the digital circuitry. There is no analog regulator; the analog circuits run directly from the V_{DDA} input.

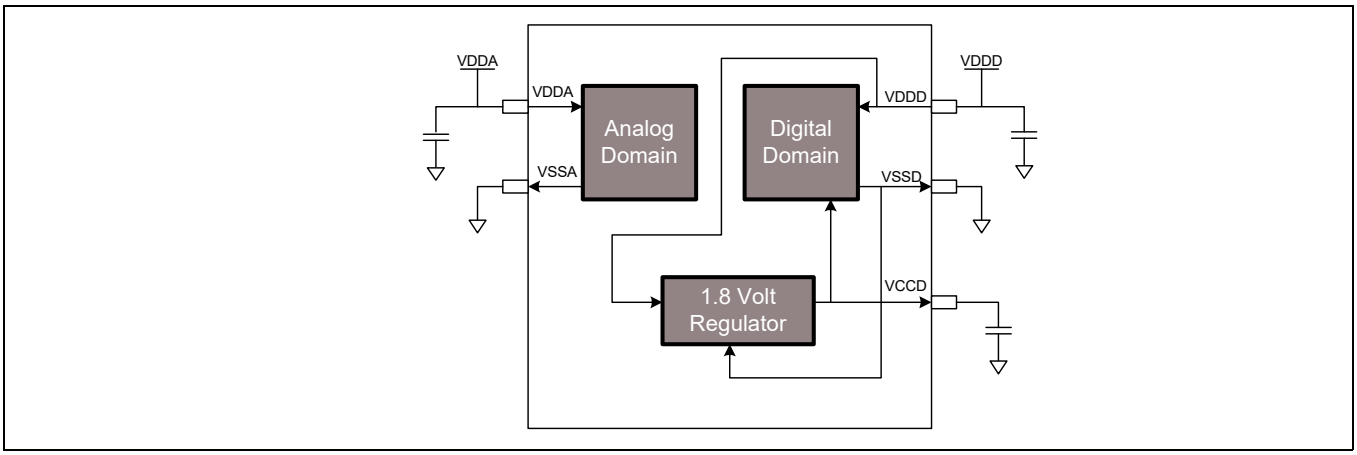

Figure 5 Power supply connections

There are two distinct modes of operation. In Mode 1, the supply voltage range is 1.8 V to 5.5 V (unregulated externally; internal regulator operational). In Mode 2, the supply range is1.8 V ±5% (externally regulated; 1.71 to 1.89, internal regulator bypassed).

4.1 Mode 1: 1.8 V to 5.5 V external supply

In this mode, PSoC™ 4500S is powered by an external power supply that can be anywhere in the range of 1.8 to 5.5 V. This range is also designed for battery-powered operation. For example, the chip can be powered from a battery system that starts at 3.5 V and works down to 1.8 V. In this mode, the internal regulator of PSoC™ 4500S supplies the internal logic and its output is connected to the V_{CCD} pin. The V_{CCD} pin must be bypassed to ground via an external capacitor (0.1 µF; X5R ceramic or better) and must not be connected to anything else.

4.2 Mode 2: 1.8 V ±5% external supply

In this mode, PSoC™ 4500S is powered by an external power supply that must be within the range of 1.71 to 1.89 V; note that this range needs to include the power supply ripple too. In this mode, the VDD and VCCD pins are shorted together and bypassed. The internal regulator can be disabled in the firmware.

Bypass capacitors must be used from VDDD to ground. The typical practice for systems in this frequency range is to use a capacitor in the 1-µF range, in parallel with a smaller capacitor (0.1 µF, for example). Note that these are simply rules of thumb and that, for critical applications, the PCB layout, lead inductance, and the bypass capacitor parasitic should be simulated to design and obtain optimal bypassing.

An example of a bypass scheme is shown in the following diagram.

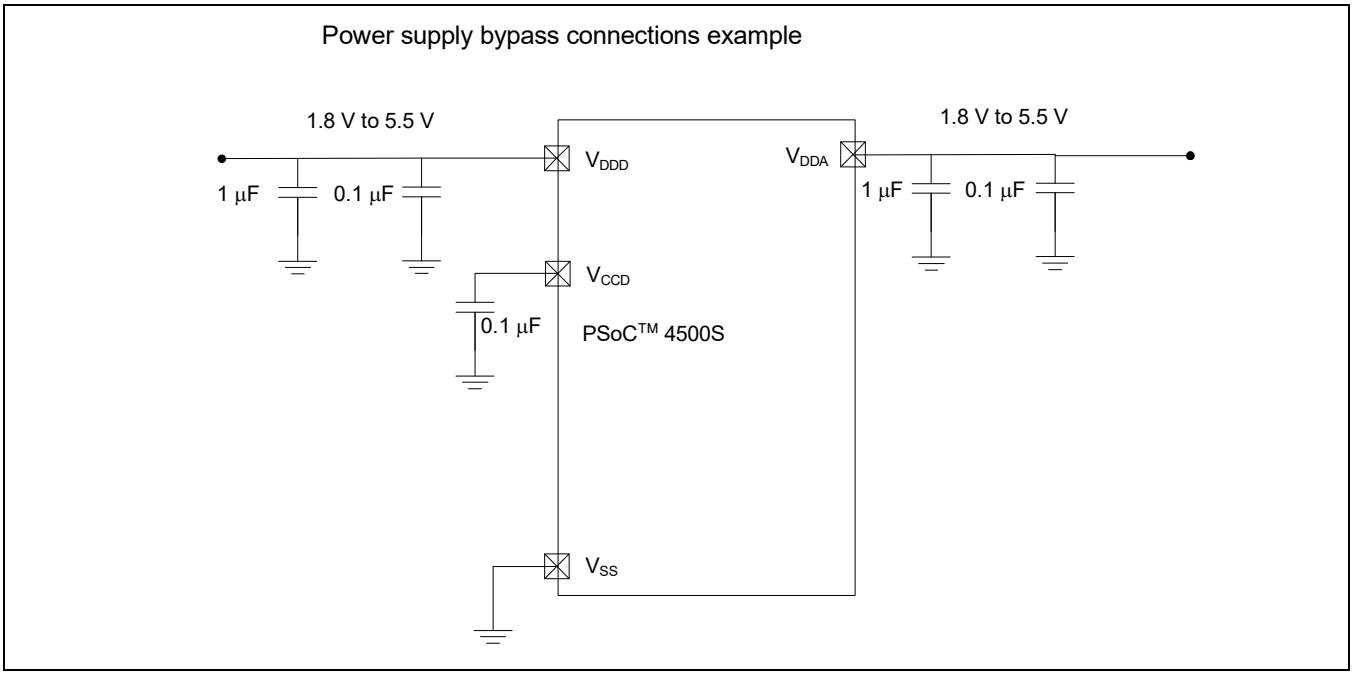

Figure 6 External supply range from 1.8 V to 5.5 V with internal regulator Active

5 Electrical specifications

5.1 Absolute maximum ratings

Table 1 Absolute maximum ratings[1]

Spec ID#	Parameter	Description	Min	Typ	Max	Unit	Details/ Conditions
SID1	V_{DDD_ABS}	Digital supply relative to V_{SS}	–0.5	–	6	V	–
SID2	V_{CCD_ABS}	Direct digital core voltage input relative to V_{SS}	–0.5	–	1.95	V	–
SID3	V_{GPIO_ABS}	GPIO voltage	–0.5	–	V_{DD}+0.5	V	–
SID4	I_{GPIO_ABS}	Maximum current per GPIO	–25	–	25	mA	–
SID5	$I_{GPIO_injection}$	GPIO injection current, Max for $V_{IH} > V_{DDD}$, and Min for $V_{IL} < V_{SS}$	–0.5	–	0.5	mA	Current injected per pin
BID44	ESD_HBM	Electrostatic discharge human body model	2200	–	–	V	–
BID45	ESD_CDM	Electrostatic discharge charged device model	500	–	–	V	–
BID46	LU	Pin current for latch-up	–140	–	140	mA	–

5.2 Device-level specifications

All specifications are valid for –40 °C ≤ T_A ≤ 105 °C and T_J ≤ 125 °C, except where noted. Specifications are valid for 1.71 V to 5.5 V, except where noted.

Table 2 DC specifications

Typical values measured at V_{DD} = 3.3 V and 25 °C.

Spec ID#	Parameter	Description	Min	Typ	Max	Unit	Details/ Conditions
SID53	V_{DD}	Power supply input voltage	1.8	–	5.5	V	Internally regulated supply
SID255	V_{DD}	Power supply input voltage (V_{CCD} = V_{DDD} = V_{DDA})	1.71	–	1.89	V	Internally unregulated supply
SID54	V_{CCD}	Output voltage (for core logic)	–	1.8	–	V	–
SID55	C_{EFC}	External regulator voltage bypass	–	0.1	–	µF	X5R ceramic or better
SID56	C_{EXC}	Power supply bypass capacitor	–	1	–	µF	X5R ceramic or better
Active Mode, V_{DD} = 1.8 V to 5.5 V. Typical values measured at V_{DD} = 3.3 V and 25 °C.							
SID10	I_{DD5}	Execute from flash; CPU at 6 MHz	–	1.8	2.4	mA	–
SID16	I_{DD8}	Execute from flash; CPU at 24 MHz	–	3.0	4.6	mA	–
SID19	I_{DD11}	Execute from flash; CPU at 48 MHz	–	5.4	7.1	mA	–

Note
1. Usage above the absolute maximum conditions listed in **Table 1** may cause permanent damage to the device. Exposure to Absolute Maximum conditions for extended periods of time may affect device reliability. The Maximum Storage Temperature is 150 °C in compliance with JEDEC Standard JESD22-A103, High Temperature Storage Life. When used below Absolute Maximum conditions but above normal operating conditions, the device may not operate to specification.

Table 2 DC specifications *(continued)*

Typical values measured at V_{DD} = 3.3 V and 25 °C.

Spec ID#	Parameter	Description	Min	Typ	Max	Unit	Details/ Conditions
Sleep Mode, VDDD = 1.8 V to 5.5 V (Regulator on)							
SID22	I_{DD17}	I^2C wakeup WDT, and Comparators on	–	1.1	2.1	mA	6 MHZ
SID25	I_{DD20}	I^2C wakeup, WDT, and Comparators on	–	1.5	2.8	mA	12 MHZ
Sleep Mode, V_{DDD} = 1.71 V to 1.89 V (Regulator bypassed)							
SID28	I_{DD23}	I^2C wakeup, WDT, and Comparators on	–	1.1	2.1	mA	6 MHZ
SID28A	I_{DD23A}	I^2C wakeup, WDT, and Comparators on	–	1.5	2.8	mA	12 MHZ
Deep Sleep Mode, V_{DD} = 1.8 V to 3.6 V (Regulator on)							
SID30	I_{DD25}	I^2C wakeup and WDT on; T = –40 °C to 60 °C	–	2.5	40	µA	T = –40 °C to 60 °C
SID31	I_{DD26}	I^2C wakeup and WDT on	–	2.5	125	µA	Max is at 3.6 V and 85 °C
Deep Sleep Mode, V_{DD} = 3.6 V to 5.5 V (Regulator on)							
SID33	I_{DD28}	I^2C wakeup and WDT on; T = –40 °C to 60 °C	–	2.5	40	µA	T = –40 °C to 60 °C
SID34	I_{DD29}	I^2C wakeup and WDT on	–	2.5	125	µA	Max is at 5.5 V and 85 °C
Deep Sleep Mode, V_{DD} = V_{CCD} = 1.71 V to 1.89 V (Regulator bypassed)							
SID36	I_{DD31}	I^2C wakeup and WDT on; T = –40 °C to 60 °C	–	2.5	60	µA	T = –40 °C to 60 °C
SID37	I_{DD32}	I^2C wakeup and WDT on	–	2.5	180	µA	Max is at 1.89 V and 85 °C
XRES current							
SID307	I_{DD_XR}	Supply current while XRES asserted	–	2	5	mA	–

Table 3 AC specifications

Spec ID#	Parameter	Description	Min	Typ	Max	Unit	Details/ Conditions
SID48	F_{CPU}	CPU frequency	DC	–	48	MHz	$1.71 \le V_{DD} \le 5.5$
SID49[2]	T_{SLEEP}	Wakeup from Sleep mode	–	0	–	µs	–
SID50[2]	$T_{DEEPSLEEP}$	Wakeup from Deep Sleep mode	–	35	–	µs	–

Note
2. Guaranteed by characterization.

5.2.1 GPIO

Table 4 GPIO DC specifications

Spec ID#	Parameter	Description	Min	Typ	Max	Unit	Details/Conditions
SID57	V_{IH}[3]	Input voltage high threshold	$0.7 \times V_{DDD}$	–	–	V	CMOS Input
SID58	V_{IL}	Input voltage low threshold	–	–	$0.3 \times V_{DDD}$	V	CMOS Input
SID241	V_{IH}[3]	LVTTL input, $V_{DDD} < 2.7$ V	$0.7 \times V_{DDD}$	–	–	V	–
SID242	V_{IL}	LVTTL input, $V_{DDD} < 2.7$ V	–	–	$0.3 \times V_{DDD}$	V	–
SID243	V_{IH}[3]	LVTTL input, $V_{DDD} \geq 2.7$ V	2.0	–	–	V	–
SID244	V_{IL}	LVTTL input, $V_{DDD} \geq 2.7$ V	–	–	0.8	V	–
SID59	V_{OH}	Output voltage high level	$V_{DDD} - 0.6$	–	–	V	I_{OH} = 4 mA at 3 V V_{DDD}
SID60	V_{OH}	Output voltage high level	$V_{DDD} - 0.5$	–	–	V	I_{OH} = 1 mA at 1.8 V V_{DDD}
SID61	V_{OL}	Output voltage low level	–	–	0.6	V	I_{OL} = 4 mA at 1.8 V V_{DDD}
SID62	V_{OL}	Output voltage low level	–	–	0.6	V	I_{OL} = 10 mA at 3 V V_{DDD}
SID62A	V_{OL}	Output voltage low level	–	–	0.4	V	I_{OL} = 3 mA at 3 V V_{DDD}
SID63	R_{PULLUP}	Pull-up resistor	3.5	5.6	8.5	kΩ	–
SID64	$R_{PULLDOWN}$	Pull-down resistor	3.5	5.6	8.5	kΩ	–
SID65	I_{IL}	Input leakage current (absolute value)	–	–	2	nA	25 °C, V_{DDD} = 3.0 V
SID66	C_{IN}	Input capacitance	–	–	7	pF	–
SID67[4]	V_{HYSTTL}	Input hysteresis LVTTL	25	40	–	mV	$V_{DDD} \geq 2.7$ V
SID68[4]	$V_{HYSCMOS}$	Input hysteresis CMOS	$0.05 \times V_{DDD}$	–	–	mV	$V_{DD} < 4.5$ V
SID68A[4]	$V_{HYSCMOS5V5}$	Input hysteresis CMOS	200	–	–	mV	$V_{DD} > 4.5$ V
SID69[4]	I_{DIODE}	Current through protection diode to V_{DD}/V_{SS}	–	–	100	µA	–
SID69A[4]	I_{TOT_GPIO}	Maximum total source or sink chip current	–	–	200	mA	–

Notes
3. V_{IH} must not exceed V_{DDD} + 0.2 V.
4. Guaranteed by characterization.

Table 5 GPIO AC specifications
(Guaranteed by characterization)

Spec ID#	Parameter	Description	Min	Typ	Max	Unit	Details/Conditions
SID70	T_{RISEF}	Rise time in fast strong mode	2	–	12	ns	3.3 V V_{DDD}, Cload = 25 pF
SID71	T_{FALLF}	Fall time in fast strong mode	2	–	12	ns	3.3 V V_{DDD}, Cload = 25 pF
SID72	T_{RISES}	Rise time in slow strong mode	10	–	60	ns	3.3 V V_{DDD}, Cload = 25 pF
SID73	T_{FALLS}	Fall time in slow strong mode	10	–	60	ns	3.3 V V_{DDD}, Cload = 25 pF
SID74	$F_{GPIOUT1}$	GPIO F_{OUT}; 3.3 V ≤ V_{DDD} ≤ 5.5 V Fast strong mode	–	–	33	MHz	90/10%, 25 pF load, 60/40 duty cycle
SID75	$F_{GPIOUT2}$	GPIO F_{OUT}; 1.71 V ≤ V_{DDD} ≤ 3.3 V Fast strong mode	–	–	16.7	MHz	90/10%, 25 pF load, 60/40 duty cycle
SID76	$F_{GPIOUT3}$	GPIO F_{OUT}; 3.3 V ≤ V_{DDD} ≤ 5.5 V Slow strong mode	–	–	7	MHz	90/10%, 25 pF load, 60/40 duty cycle
SID245	$F_{GPIOUT4}$	GPIO F_{OUT}; 1.71 V ≤ V_{DDD} ≤ 3.3 V Slow strong mode.	–	–	3.5	MHz	90/10%, 25 pF load, 60/40 duty cycle
SID246	F_{GPIOIN}	GPIO input operating frequency; 1.71 V ≤ V_{DDD} ≤ 5.5 V	–	–	48	MHz	90/10% V_{IO}

5.2.2 XRES

Table 6 XRES DC specifications

Spec ID#	Parameter	Description	Min	Typ	Max	Unit	Details/Conditions
SID77	V_{IH}	Input voltage high threshold	0.7 × V_{DDD}	–	–	V	CMOS Input
SID78	V_{IL}	Input voltage low threshold	–	–	0.3 × V_{DDD}	V	
SID79	R_{PULLUP}	Pull-up resistor	–	60	–	kΩ	–
SID80	C_{IN}	Input capacitance	–	–	7	pF	–
SID81[5]	$V_{HYSXRES}$	Input voltage hysteresis	–	100	–	mV	Typical hysteresis is 200 mV for V_{DD} > 4.5 V
SID82	I_{DIODE}	Current through protection diode to V_{DD}/V_{SS}	–	–	100	µA	–

Table 7 XRES AC specifications

Spec ID#	Parameter	Description	Min	Typ	Max	Unit	Details/Conditions
SID83[5]	$T_{RESETWIDTH}$	Reset pulse width	1	–	–	µs	–
BID194[5]	$T_{RESETWAKE}$	Wake-up time from reset release	–	–	2.7	ms	–

Note
5. Guaranteed by characterization.

5.3 Analog peripherals

5.3.1 CTBm opamp

Table 8 CTBm opamp specifications

Spec ID#	Parameter	Description	Min	Typ	Max	Unit	Details/ Conditions
	I_{DD}	Opamp block current, External load					
SID269	I_{DD_HI}	power=hi	–	1100	1900	µA	–
SID270	I_{DD_MED}	power=med	–	550	1020	µA	–
SID271	I_{DD_LOW}	power=lo	–	150	370	µA	–
	G_{BW}	Load = 50 pF, 0.1 mA V_{DDA} = 2.7 V					
SID272	G_{BW_HI}	power=hi	6	–	–	MHz	Input and output are 0.2 V to V_{DDA}-0.2 V
SID273	G_{BW_MED}	power=med	3	–	–	MHz	Input and output are 0.2 V to V_{DDA}-0.2 V
SID274	G_{BW_LO}	power=lo	–	1	–	MHz	Input and output are 0.2 V to V_{DDA}-0.2 V
	I_{OUT_MAX}	V_{DDA} = 2.7 V, 500 mV from rail					
SID275	$I_{OUT_MAX_HI}$	power=hi	10	–	–	mA	Output is 0.5 V to V_{DDA} -0.5 V
SID276	$I_{OUT_MAX_MID}$	power=mid	10	–	–	mA	Output is 0.5 V to V_{DDA} -0.5 V
SID277	$I_{OUT_MAX_LO}$	power=lo	–	5	–	mA	Output is 0.5 V to V_{DDA} -0.5 V
	I_{OUT}	V_{DDA} = 1.71 V, 500 mV from rail					
SID278	$I_{OUT_MAX_HI}$	power=hi	4	–	–	mA	Output is 0.5 V to V_{DDA} -0.5 V
SID279	$I_{OUT_MAX_MID}$	power=mid	4	–	–	mA	Output is 0.5 V to V_{DDA}-0.5 V
SID280	$I_{OUT_MAX_LO}$	power=lo	–	2	–	mA	Output is 0.5 V to V_{DDA}-0.5 V
	I_{DD_Int}	Opamp block current Internal Load					
SID269_I	$I_{DD_HI_Int}$	power=hi	–	1500	1700	µA	–
SID270_I	$I_{DD_MED_Int}$	power=med	–	700	980	µA	–
SID271_I	$I_{DD_LOW_Int}$	power=lo	–	–	405	µA	–
	G_{BW}	V_{DDA} = 2.7 V	–	–	–		–
SID272_I	$G_{BW_HI_Int}$	power=hi	8	–	–	MHz	Output is 0.25 V to V_{DDA}-0.25 V

Table 8 CTBm opamp specifications *(continued)*

Spec ID#	Parameter	Description	Min	Typ	Max	Unit	Details/ Conditions
		General opamp specs for both internal and external modes					
SID281	V_{IN}	Charge-pump on, V_{DDA} = 2.7 V	–0.05	–	V_{DDA}-0.2	V	–
SID282	V_{CM}	Charge-pump on, V_{DDA} = 2.7 V	–0.05	–	V_{DDA}-0.2	V	–
	V_{OUT}	V_{DDA} = 2.7 V					
SID283	V_{OUT_1}	power=hi, Iload=10 mA	0.5	–	V_{DDA} -0.5	V	–
SID284	V_{OUT_2}	power=hi, Iload=1 mA	0.2	–	V_{DDA} -0.2	V	–
SID285	V_{OUT_3}	power=med, Iload=1 mA	0.2	–	V_{DDA} -0.2	V	–
SID286	V_{OUT_4}	power=lo, Iload=0.1 mA	0.2	–	V_{DDA} -0.2	V	–
SID288	V_{OS_TR}	Offset voltage, trimmed	–1.0	±0.5	1.0	mV	High mode, input 0 V to V_{DDA}-0.2 V
SID288A	V_{OS_TR}	Offset voltage, trimmed	–	±1	–	mV	Medium mode, input 0 V to V_{DDA}-0.2 V
SID288B	V_{OS_TR}	Offset voltage, trimmed	–	±2	–	mV	Low mode, input 0 V to V_{DDA}-0.2 V
SID290	$V_{OS_DR_TR}$	Offset voltage drift, trimmed	–10	±3	10	µV/°C	High mode
SID290A	$V_{OS_DR_TR}$	Offset voltage drift, trimmed	–	±10	–	µV/°C	Medium mode
SID290B	$V_{OS_DR_TR}$	Offset voltage drift, trimmed	–	±10	–	µV/°C	Low mode
SID291	CMRR	DC	70	80	–	dB	Input is 0 V to V_{DDA}-0.2 V, Output is 0.2 V to V_{DDA}-0.2 V
SID292	PSRR	At 1 kHz, 10-mV ripple	70	85	–	dB	V_{DDD} = 3.6 V, high-power mode, input is 0.2 V to V_{DDA}-0.2 V
	Noise						
SID294	VN2	Input-referred, 1 kHz, power = Hi	–	72	–	nV/rtHz	Input and output are at 0.2 V to V_{DDA}-0.2 V

Table 8 CTBm opamp specifications *(continued)*

Spec ID#	Parameter	Description	Min	Typ	Max	Unit	Details/ Conditions
SID295	VN3	Input-referred, 10 kHz, power = Hi	–	28	–	nV/rtHz	Input and output are at 0.2 V to V_{DDA}-0.2 V
SID296	VN4	Input-referred, 100 kHz, power = Hi	–	15	–	nV/rtHz	Input and output are at 0.2 V to V_{DDA}-0.2 V
SID297	C_{LOAD}	Stable up to max. load. Performance specs at 50 pF.	–	–	125	pF	–
SID298	SLEW_RATE	Cload = 50 pF, Power = High, V_{DDA} = 2.7 V	4	–	–	V/µs	–
SID299	T_OP_WAKE	From disable to enable, no external RC dominating	–	–	25	µs	–
SID299A	OL_GAIN	Open Loop Gain	–	90	–	dB	–
	COMP_MODE	Comparator mode; 50 mV drive, T_{rise}=T_{fall} (approx.)					
SID300	TPD1	Response time; power=hi	–	150	–	ns	Input is 0.2 V to V_{DDA}-0.2 V
SID301	TPD2	Response time; power=med	–	500	–	ns	Input is 0.2 V to V_{DDA}-0.2 V
SID302	TPD3	Response time; power=lo	–	2500	–	ns	Input is 0.2 V to V_{DDA}-0.2 V
SID303	VHYST_OP	Hysteresis	–	10	–	mV	–
SID304	WUP_CTB	Wake-up time from Enabled to Usable	–	–	25	µs	–
	Deep Sleep Mode	Mode 2 is lowest current range. Mode 1 has higher GBW.					
SID_DS_1	$I_{DD_HI_M1}$	Mode 1, High current	–	1400	–	µA	25 °C
SID_DS_2	$I_{DD_MED_M1}$	Mode 1, Medium current	–	700	–	µA	25 °C
SID_DS_3	$I_{DD_LOW_M1}$	Mode 1, Low current	–	200	–	µA	25 °C
SID_DS_4	$I_{DD_HI_M2}$	Mode 2, High current	–	120	–	µA	25 °C
SID_DS_5	$I_{DD_MED_M2}$	Mode 2, Medium current	–	60	–	µA	25 °C
SID_DS_6	$I_{DD_LOW_M2}$	Mode 2, Low current	–	15	–	µA	25 °C
SID_DS_7	$G_{BW_HI_M1}$	Mode 1, High current	–	4	–	MHz	20-pF load, no DC load 0.2 V to V_{DDA}-0.2 V

Table 8 CTBm opamp specifications *(continued)*

Spec ID#	Parameter	Description	Min	Typ	Max	Unit	Details/ Conditions
SID_DS_8	$G_{BW_MED_M1}$	Mode 1, Medium current	–	2	–	MHz	20-pF load, no DC load 0.2 V to V_{DDA}-0.2 V
SID_DS_9	$G_{BW_LOW_M1}$	Mode 1, Low current	–	0.5	–	MHz	20-pF load, no DC load 0.2 V to V_{DDA}-0.2 V
SID_DS_10	$G_{BW_HI_M2}$	Mode 2, High current	–	0.5	–	MHz	20-pF load, no DC load 0.2 V to V_{DDA}-0.2 V
SID_DS_11	$G_{BW_MED_M2}$	Mode 2, Medium current	–	0.2	–	MHz	20-pF load, no DC load 0.2 V to V_{DDA}-0.2 V
SID_DS_12	$G_{BW_Low_M2}$	Mode 2, Low current	–	0.1	–	MHz	20-pF load, no DC load 0.2 V to V_{DDA}-0.2 V
SID_DS_13	$V_{OS_HI_M1}$	Mode 1, High current	–	5	–	mV	With trim 25 °C, 0.2 V to V_{DDA}-0.2 V
SID_DS_14	$V_{OS_MED_M1}$	Mode 1, Medium current	–	5	–	mV	With trim 25 °C, 0.2 V to V_{DDA}-0.2 V
SID_DS_15	$V_{OS_LOW_M1}$	Mode 1, Low current	–	5	–	mV	With trim 25 °C, 0.2 V to V_{DDA}-0.2 V
SID_DS_16	$V_{OS_HI_M2}$	Mode 2, High current	–	5	–	mV	With trim 25 °C, 0.2V to V_{DDA}-0.2 V
SID_DS_17	$V_{OS_MED_M2}$	Mode 2, Medium current	–	5	–	mV	With trim 25 °C, 0.2 V to V_{DDA}-0.2 V
SID_DS_18	$V_{OS_LOW_M2}$	Mode 2, Low current	–	5	–	mV	With trim 25 °C, 0.2 V to V_{DDA}-0.2 V
SID_DS_19	$I_{OUT_HI_M1}$	Mode 1, High current	–	10	–	mA	Output is 0.5 V to V_{DDA}-0.5 V
SID_DS_20	$I_{OUT_MED_M1}$	Mode 1, Medium current	–	10	–	mA	Output is 0.5 V to V_{DDA}-0.5 V
SID_DS_21	$I_{OUT_LOW_M1}$	Mode 1, Low current	–	4	–	mA	Output is 0.5 V to V_{DDA}-0.5 V
SID_DS_22	$I_{OUT_HI_M2}$	Mode 2, High current	–	1	–	mA	–
SID_DS_23	$I_{OUT_MED_M2}$	Mode 2, Medium current	–	1	–	mA	–
SID_DS_24	$I_{OUT_LOW_M2}$	Mode 2, Low current	–	0.5	–	mA	–

5.3.2 Comparator

Table 9 Comparator DC specifications

Spec ID#	Parameter	Description	Min	Typ	Max	Unit	Details/Conditions
SID84	$V_{OFFSET1}$	Input offset voltage, Factory trim	–	–	±10	mV	–
SID85	$V_{OFFSET2}$	Input offset voltage, Custom trim	–	–	±4	mV	–
SID86	V_{HYST}	Hysteresis when enabled	–	10	35	mV	–
SID87	V_{ICM1}	Input common mode voltage in normal mode	0	–	V_{DDD}-0.1	V	Modes 1 and 2
SID247	V_{ICM2}	Input common mode voltage in low power mode	0	–	V_{DDD}	V	–
SID247A	V_{ICM3}	Input common mode voltage in ultra low power mode	0	–	V_{DDD}-1.15	V	$V_{DDD} \geq 2.2$ V at –40 °C
SID88	C_{MRR}	Common mode rejection ratio	50	–	–	dB	$V_{DDD} \geq 2.7$V
SID88A	C_{MRR}	Common mode rejection ratio	42	–	–	dB	$V_{DDD} \leq 2.7$V
SID89	I_{CMP1}	Block current, normal mode	–	–	400	µA	–
SID248	I_{CMP2}	Block current, low power mode	–	–	100	µA	–
SID259	I_{CMP3}	Block current in ultra low-power mode	–	–	6	µA	$V_{DDD} \geq 2.2$ V at –40 °C
SID90	Z_{CMP}	DC Input impedance of comparator	35	–	–	MΩ	–

Table 10 Comparator AC specifications

Spec ID#	Parameter	Description	Min	Typ	Max	Unit	Details/Conditions
SID91	TRESP1	Response time, normal mode, 50 mV overdrive	–	38	110	ns	–
SID258	TRESP2	Response time, low power mode, 50 mV overdrive	–	70	200	ns	–
SID92	TRESP3	Response time, ultra-low power mode, 200 mV overdrive	–	2.3	15	µs	$V_{DDD} \geq 2.2$ V at –40 °C

5.3.3 Temperature sensor

Table 11 Temperature sensor specifications

Spec ID#	Parameter	Description	Min	Typ	Max	Unit	Details/Conditions
SID93	$T_{SENSACC}$	Temperature sensor accuracy	–5	±1	5	°C	–40 to +85 °C

Note
6. Guaranteed by characterization.

5.3.4 SAR ADC

Table 12 SAR ADC specifications

Spec ID#	Parameter	Description	Min	Typ	Max	Unit	Details/ Conditions
SAR ADC DC specifications							
SID94	A_RES	Resolution	–	–	12	bits	–
SID95	A_CHNLS_S	Number of channels - single ended	–	–	16		–
SID96	A-CHNKS_D	Number of channels - differential	–	–	4		Diff inputs use neighboring I/O
SID97	A-MONO	Monotonicity		Yes			–
SID98	A_GAINERR	Gain error	–	–	±0.125	%	With external reference
SID99	A_OFFSET	Input offset voltage	–	–	±2.3	mV	Measured with 1-V reference
SID100	A_ISAR	Current consumption	–	–	1	mA	–
SID101	A_VINS	Input voltage range - single ended	V_{SS}	–	V_{DDA}	V	–
SID102	A_VIND	Input voltage range - differential	V_{SS}	–	V_{DDA}	V	–
SID103	A_INRES	Input resistance	–	–	2.2	KΩ	–
SID104	A_INCAP	Input capacitance	–	–	10	pF	–
SID260	VREFSAR	Trimmed internal reference to SAR	1.188	1.2	1.212	V	–
SAR ADC AC specifications							
SID106	A_PSRR	Power supply rejection ratio	70	–	–	dB	–
SID107	A_CMRR	Common mode rejection ratio	66	–	–	dB	Measured at 1 V
SID108	A_SAMP	Sample rate	–	–	1	Msps	–
SID109	A_SNR	Signal-to-noise and distortion ratio (SINAD)	64	–	–	dB	F_{IN} = 10 kHz
SID110	A_BW	Input bandwidth without aliasing	–	–	A_samp/ 2	kHz	–
SID111	A_INL	Integral Non Linearity for SAR_1	–1	–	1	LSB	SAR_1
SID111A	A_INL	Integral Non Linearity for SAR_0	–3	–	3	LSB	SAR_0
SID112	A_DNL	Integral Non Linearity for SAR_1	–1	–	1	LSB	SAR_1
SID112A	A_DNL	Differential Non Linearity for SAR_0	–1	–	3	LSB	SAR_0
SID113	A_THD	Total harmonic distortion	–	–	–62	dB	Fin = 10 kHz
SID261	FSARINTREF	SAR operating speed without external reference bypass	–	–	100	ksps	12-bit resolution

5.3.5 CSD and IDAC

Table 13 CSD and IDAC specifications

Spec ID#	Parameter	Description	Min	Typ	Max	Unit	Details / Conditions
SYS.PER#3	VDD_RIPPLE	Max allowed ripple on power supply, DC to 10 MHz	–	–	±50	mV	V_{DD} > 2 V (with ripple), 25 °C T_A, Sensitivity = 0.1 pF
SYS.PER#16	VDD_RIP-PLE_1.8	Max allowed ripple on power supply, DC to 10 MHz	–	–	±25	mV	V_{DD} > 1.75V (with ripple), 25 °C T_A, Parasitic Capacitance (C_P) < 20 pF, Sensitivity ≥ 0.4 pF
SID.CSD.BLK	ICSD	Maximum block current	–	–	4000	µA	Maximum block current for both IDACs in dynamic (switching) mode including comparators, buffer, and reference generator
SID.CSD#15	V_{REF}	Voltage reference for CSD and Comparator	0.6	1.2	V_{DDA} - 0.6	V	V_{DDA} – 0.6 or 4.4, whichever is lower
SID.CSD#16	IDAC1IDD	IDAC1 (7-bits) block current	–	–	1750	µA	–
SID.CSD#17	IDAC2IDD	IDAC2 (7-bits) block current	–	–	1750	µA	–
SID308	VCSD	Voltage range of operation	1.71	–	5.5	V	1.8 V ±5% or 1.8 V to 5.5 V
SID308A	VCOMPIDAC	Voltage compliance range of IDAC	0.6	–	V_{DDA} –0.6	V	V_{DDA} – 0.6 or 4.4, whichever is lower
SID309	IDAC1DNL	IDAC1DNL	–1	–	1	LSB	–
SID310	IDAC1INL	IDAC1INL	–2	–	2	LSB	INL is ±5.5 LSB for V_{DDA} < 2 V
SID311	IDAC2DNL	IDAC2DNL	–1	–	1	LSB	–
SID312	IDAC2INL	IDAC2INL	–2	–	2	LSB	INL is ±5.5 LSB for V_{DDA} < 2 V
SID313	SNR	Ratio of counts of finger to noise. Guaranteed by characterization	5	–	–	Ratio	Capacitance range of 5 to 35 pF, 0.1-pF sensitivity. All use cases. V_{DDA} > 2 V.
SID314	IDAC1CRT1	Output current of IDAC1 (7 bits) in low range	4.2	–	5.4	µA	LSB = 37.5-nA typ
SID314A	IDAC1CRT2	Output current of IDAC1(7 bits) in medium range	34	–	41	µA	LSB = 300-nA typ
SID314B	IDAC1CRT3	Output current of IDAC1(7 bits) in high range	275	–	330	µA	LSB = 2.4-µA typ
SID314C	IDAC1CRT12	Output current of IDAC1 (7 bits) in low range, 2X mode	8	–	10.5	µA	LSB = 75-nA typ
SID314D	IDAC1CRT22	Output current of IDAC1(7 bits) in medium range, 2X mode	69	–	82	µA	LSB = 600-nA typ.
SID314E	IDAC1CRT32	Output current of IDAC1(7 bits) in high range, 2X mode	540	–	660	µA	LSB = 4.8-µA typ
SID315	IDAC2CRT1	Output current of IDAC2 (7 bits) in low range	4.2	–	5.4	µA	LSB = 37.5-nA typ

Table 13 CSD and IDAC specifications *(continued)*

Spec ID#	Parameter	Description	Min	Typ	Max	Unit	Details / Conditions
SID315A	IDAC2CRT2	Output current of IDAC2 (7 bits) in medium range	34	–	41	µA	LSB = 300-nA typ
SID315B	IDAC2CRT3	Output current of IDAC2 (7 bits) in high range	275	–	330	µA	LSB = 2.4-µA typ
SID315C	IDAC2CRT12	Output current of IDAC2 (7 bits) in low range, 2X mode	8	–	10.5	µA	LSB = 75-nA typ
SID315D	IDAC2CRT22	Output current of IDAC2(7 bits) in medium range, 2X mode	69	–	82	µA	LSB = 600-nA typ
SID315E	IDAC2CRT32	Output current of IDAC2(7 bits) in high range, 2X mode	540	–	660	µA	LSB = 4.8-µA typ
SID315F	IDAC3CRT13	Output current of IDAC in 8-bit mode in low range	8	–	10.5	µA	LSB = 37.5-nA typ
SID315G	IDAC3CRT23	Output current of IDAC in 8-bit mode in medium range	69	–	82	µA	LSB = 300-nA typ
SID315H	IDAC3CRT33	Output current of IDAC in 8-bit mode in high range	540	–	660	µA	LSB = 2.4-µA typ
SID320	IDACOFFSET	All zeroes input	–	–	1	LSB	Polarity set by Source or Sink. Offset is 2 LSBs for 37.5 nA/LSB mode
SID321	IDACGAIN	Full-scale error less offset	–	–	±10	%	–
SID322	IDACMIS-MATCH1	Mismatch between IDAC1 and IDAC2 in Low range	–	–	9.2	LSB	LSB = 37.5-nA typ
SID322A	IDACMIS-MATCH2	Mismatch between IDAC1 and IDAC2 in Medium range	–	–	5.6	LSB	LSB = 300-nA typ
SID322B	IDACMIS-MATCH3	Mismatch between IDAC1 and IDAC2 in High range	–	–	6.8	LSB	LSB = 2.4-µA typ
SID323	IDACSET8	Settling time to 0.5 LSB for 8-bit IDAC	–	–	5	µs	Full-scale transition. No external load
SID324	IDACSET7	Settling time to 0.5 LSB for 7-bit IDAC	–	–	5	µs	Full-scale transition. No external load
SID325	CMOD	External modulator capacitor.	–	2.2	–	nF	5-V rating, X7R or NP0 cap

5.3.6 10-bit CAPSENSE™ ADC

Table 14 10-bit CAPSENSE™ ADC specifications

Spec ID#	Parameter	Description	Min	Typ	Max	Unit	Details/Conditions
SIDA94	A_RES	Resolution	–	–	10	bits	Auto-zeroing is required every milli-second
SIDA95	A_CHNLS_S	Number of channels - single ended	–	–	16		Defined by AMUX Bus
SIDA97	A-MONO	Monotonicity		Yes			–
SIDA98	A_GAINERR	Gain error	–	–	±3	%	In V_{REF} (2.4 V) mode with V_{DDA} bypass capacitance of 10 µF

Table 14 10-bit CAPSENSE™ ADC specifications *(continued)*

Spec ID#	Parameter	Description	Min	Typ	Max	Unit	Details/Conditions
SIDA99	A_OFFSET	Input offset voltage	–	–	±18	mV	In V_{REF} (2.4 V) mode with V_{DDA} bypass capacitance of 10 µF
SIDA100	A_ISAR	Current consumption	–	–	0.25	mA	–
SIDA101	A_VINS	Input voltage range - single ended	V_{SSA}	–	V_{DDA}	V	–
SIDA103	A_INRES	Input resistance	–	2.2	–	KΩ	–
SIDA104	A_INCAP	Input capacitance	–	20	–	pF	–
SIDA106	A_PSRR	Power supply rejection ratio	–	60	–	dB	In V_{REF} (2.4 V) mode with V_{DDA} bypass capacitance of 10 µF
SIDA107	A_TACQ	Sample acquisition time	–	1	–	µs	–
SIDA108	A_CONV8	Conversion time for 8-bit resolution at conversion rate = Fhclk/(2^(N+2)). Clock frequency = 48 MHz.	–	–	21.3	µs	Does not include acquisition time. Equivalent to 44.8 ksps including acquisition time.
SIDA108A	A_CONV10	Conversion time for 10-bit resolution at conversion rate = Fhclk/(2^(N+2)). Clock frequency = 48 MHz.	–	–	85.3	µs	Does not include acquisition time. Equivalent to 11.6 ksps including acquisition time.
SIDA109	A_SND	Signal-to-noise and Distortion ratio (SINAD)	–	59	–	dB	With 10-Hz input sine wave, internal reference, V_{REF} (2.4 V) mode
SIDA110	A_BW	Input bandwidth without aliasing	–	–	22.4	KHz	8-bit resolution
SIDA111	A_INL	Integral Non Linearity. 1 ksps	–	–	2	LSB	V_{REF} = 2.4 V or greater
SIDA112	A_DNL	Differential Non Linearity. 1 ksps	–	–	1	LSB	–

5.4 Digital peripherals

5.4.1 Timer Counter Pulse-width Modulator (TCPWM)

Table 15 TCPWM specifications

Spec ID#	Parameter	Description	Min	Typ	Max	Unit	Details/Conditions
SID.TCPWM.1	ITCPWM1	Block current consumption at 3 MHz	–	–	45	µA	All modes (TCPWM)
SID.TCPWM.2	ITCPWM2	Block current consumption at 12 MHz	–	–	155	µA	All modes (TCPWM)
SID.TCPWM.2A	ITCPWM3	Block current consumption at 48 MHz	–	–	650	µA	All modes (TCPWM)
SID.TCPWM.3	$TCPWM_{FREQ}$	Operating frequency	–	–	Fc	MHz	Fc max = CLK_SYS Maximum = 48 MHz
SID.TCPWM.4	$TPWM_{ENEXT}$	Input trigger pulse width	2/Fc	–	–	ns	For all trigger events[7]
SID.TCPWM.5	$TPWM_{EXT}$	Output trigger pulse widths	2/Fc	–	–	ns	Minimum possible width of Overflow, Underflow, and CC (Counter equals Compare value) outputs
SID.TCPWM.5A	TC_{RES}	Resolution of counter	1/Fc	–	–	ns	Minimum time between successive counts
SID.TCPWM.5B	PWM_{RES}	PWM resolution	1/Fc	–	–	ns	Minimum pulse width of PWM Output
SID.TCPWM.5C	Q_{RES}	Quadrature inputs resolution	1/Fc	–	–	ns	Minimum pulse width between Quadrature phase inputs

Note
7. Guaranteed by characterization.

5.4.2 I²C

Table 16 Fixed I²C DC specifications[7]

Spec ID#	Parameter	Description	Min	Typ	Max	Unit	Details/Conditions
SID149	I_{I2C1}	Block current consumption at 100 kHz	–	–	50	µA	–
SID150	I_{I2C2}	Block current consumption at 400 kHz	–	–	135	µA	–
SID151	I_{I2C3}	Block current consumption at 1 Mbps	–	–	310	µA	–
SID152	I_{I2C4}	Block current enabled in Deep Sleep mode	–	1	–	µA	–

Table 17 Fixed I²C AC specifications[7]

Spec ID#	Parameter	Description	Min	Typ	Max	Unit	Details/Conditions
SID153	F_{I2C1}	Bit rate	–	–	1	Msps	–

5.4.3 SPI

Table 18 SPI DC specifications[7]

Spec ID#	Parameter	Description	Min	Typ	Max	Unit	Details/Conditions
SID163	ISPI1	Block current consumption at 1 Mbps	–	–	360	µA	–
SID164	ISPI2	Block current consumption at 4 Mbps	–	–	560		–
SID165	ISPI3	Block current consumption at 8 Mbps	–	–	600		–

Table 19 SPI AC specifications[8]

Spec ID#	Parameter	Description	Min	Typ	Max	Unit	Details/Conditions
SID166	FSPI	SPI Operating frequency (Master; 6X Oversampling)	–	–	8	MHz	–
Fixed SPI Master Mode AC specifications							
SID167	TDMO	MOSI Valid after SClock driving edge	–	–	15	ns	–
SID168	TDSI	MISO Valid before SClock capturing edge	20	–	–		Full clock, late MISO sampling
SID169	THMO	Previous MOSI data hold time	0	–	–		Referred to Slave capturing edge
Fixed SPI Slave Mode AC specifications							
SID170	TDMI	MOSI Valid before Sclock Capturing edge	40	–	–	ns	–
SID171	TDSO	MISO Valid after Sclock driving edge	–	–	42 + 3*Tcpu		$T_{CPU} = 1/F_{CPU}$
SID171A	TDSO_EXT	MISO Valid after Sclock driving edge in Ext. Clk mode	–	–	48		–
SID172	THSO	Previous MISO data hold time	0	–	–		–
SID172A	TSSELSSCK	SSEL Valid to first SCK Valid edge	100	–	–	ns	–

5.4.4 UART

Table 20 UART DC specifications[8]

Spec ID#	Parameter	Description	Min	Typ	Max	Unit	Details/Conditions
SID160	I_{UART1}	Block current consumption at 100 Kbps	–	–	55	µA	–
SID161	I_{UART2}	Block current consumption at 1000 Kbps	–	–	312	µA	–

Table 21 UART AC Specifications[8]

Spec ID#	Parameter	Description	Min	Typ	Max	Unit	Details/Conditions
SID162	F_{UART}	Bit rate	–	–	1	Mbps	–

5.4.5 LCD Direct Drive

Table 22 LCD Direct Drive DC specifications[8]

Spec ID#	Parameter	Description	Min	Typ	Max	Unit	Details/Conditions
SID155	C_{LCDCAP}	LCD capacitance per segment/common driver	–	500	5000	pF	–
SID156	LCD_{OFFSET}	Long-term segment offset	–	20	–	mV	–
SID157	I_{LCDOP1}	LCD system operating current Vbias = 5 V	–	2	–	mA	32 × 4 segments at 50 Hz 25 °C
SID158	I_{LCDOP2}	LCD system operating current Vbias = 3.3 V	–	2	–		32 × 4 segments at 50 Hz 25 °C

Table 23 LCD Direct Drive AC Specifications[8]

Spec ID#	Parameter	Description	Min	Typ	Max	Unit	Details/Conditions
SID159	F_{LCD}	LCD frame rate	10	50	150	Hz	–

Note
8. Guaranteed by characterization.

5.5 Memory

Table 24 Flash DC specifications

Spec ID#	Parameter	Description	Min	Typ	Max	Unit	Details/Conditions
SID173	V_{PE}	Erase and program voltage	1.71	–	5.5	V	–

Table 25 Flash AC Specifications

Spec ID#	Parameter	Description	Min	Typ	Max	Unit	Details/Conditions
SID174	$T_{ROWWRITE}$[9]	Row (block) write time (erase and program)	–	–	20	ms	Row (block) = 256 bytes
SID175	$T_{ROWERASE}$[9]	Row erase time	–	–	16	ms	–
SID176	$T_{ROWPROGRAM}$[9]	Row program time after erase	–	–	4	ms	–
SID178	$T_{BULKERASE}$[9]	Bulk erase time (256 KB)	–	–	35	ms	–
SID180[10]	$T_{DEVPROG}$[9]	Total device program time	–	–	7	Seconds	–
SID181[10]	F_{END}	Flash endurance	100 K	–	–	Cycles	–
SID182[10]	F_{RET}	Flash retention. $T_A \leq 55$ °C, 100 K P/E cycles	20	–	–	Years	–
SID182A[10]	–	Flash retention. $T_A \leq 85$ °C, 10 K P/E cycles	10	–	–		–
SID182B	F_{RETQ}	Flash retention. $T_A \leq 105$ °C, 10K P/E cycles, ≤ three years at $T_A \geq 85$ °C	10	–	–	years	Guaranteed by characterization.
SID256	TWS48	Number of Wait states at 48 MHz	2	–	–		CPU execution from Flash
SID257	TWS24	Number of Wait states at 24 MHz	1	–	–		CPU execution from Flash

Notes
9. It can take as much as 20 milliseconds to write to Flash. During this time the device should not be Reset, or Flash operations will be interrupted and cannot be relied on to have completed. Reset sources include the XRES pin, software resets, CPU lockup states and privilege violations, improper power supply levels, and watchdogs. Make certain that these are not inadvertently activated.
10. Guaranteed by characterization.

5.6 System resources

5.6.1 Power-on reset (POR)

Table 26 Power on reset (PRES)

Spec ID#	Parameter	Description	Min	Typ	Max	Unit	Details/Conditions
SID.CLK#6	SR_POWER_UP	Power supply slew rate	1	–	67	V/ms	At power-up and power-down.
SID185[10]	$V_{RISEIPOR}$	Rising trip voltage	0.80	–	1.5	V	–
SID186[10]	$V_{FALLIPOR}$	Falling trip voltage	0.70	–	1.4		–

Table 27 Brown-out detect (BOD) for V_{CCD}

Spec ID#	Parameter	Description	Min	Typ	Max	Unit	Details/Conditions
SID190[10]	$V_{FALLPPOR}$	BOD trip voltage in active and sleep modes	1.48	–	1.62	V	–
SID192[10]	$V_{FALLDPSLP}$	BOD trip voltage in Deep Sleep	1.11	–	1.5		–

5.6.2 SWD interface

Table 28 SWD interface specifications

Spec ID#	Parameter	Description	Min	Typ	Max	Unit	Details/Conditions
SID213	F_SWDCLK1	$3.3\ V \le V_{DD} \le 5.5\ V$	–	–	14	MHz	SWDCLK ≤ 1/3 CPU clock frequency
SID214	F_SWDCLK2	$1.71\ V \le V_{DD} \le 3.3\ V$	–	–	7		SWDCLK ≤ 1/3 CPU clock frequency
SID215[11]	T_SWDI_SETUP	T = 1/f SWDCLK	0.25*T	–	–	ns	–
SID216[11]	T_SWDI_HOLD	T = 1/f SWDCLK	0.25*T	–	–		–
SID217[11]	T_SWDO_VALID	T = 1/f SWDCLK	–	–	0.5*T		–
SID217A[11]	T_SWDO_HOLD	T = 1/f SWDCLK	1	–	–		–

Notes
11. Guaranteed by design.
12. For industrial temperature range parts, the maximum temperature is 85°C.

5.6.3 Internal Main Oscillator

Table 29 IMO DC specifications

(Guaranteed by Design)

Spec ID#	Parameter	Description	Min	Typ	Max	Unit	Details/Conditions
SID218	I_{IMO1}	IMO operating current at 48 MHz	–	–	250	µA	–
SID219	I_{IMO2}	IMO operating current at 24 MHz	–	–	180	µA	–

Table 30 IMO AC specifications

Spec ID#	Parameter	Description	Min	Typ	Max	Unit	Details/Conditions
SID223[14]	$F_{IMOTOL1}$	Frequency variation at 24, 32, and 48 MHz (trimmed)	–	–	±2.0	%	At –40°C to 85°C, for industrial temperature range and original extended industrial range parts
SID223A[13, 14]			–	–	±2.5	%	At –40°C to 105°C, for all extended industrial temperature range parts
SID223B[13, 14]			–	–	±2.0	%	At –30°C to 105°C, for enhanced IMO extended industrial temperature range parts
SID223C[13, 14]			–	–	±1.5	%	At –20°C to 105°C, for enhanced IMO extended industrial temperature range parts
SID223D[13, 14]			–	–	±1.25	%	At 0°C to 85°C, for enhanced IMO extended industrial temperature range parts
SID226	$T_{STARTIMO}$	IMO startup time	–	–	7	µs	–
SID228	$T_{JITRMSIMO2}$	RMS jitter at 24 MHz	–	145	–	ps	–

Notes
13. The enhanced IMO extended temperature range parts replace the original extended industrial temperature range parts. For details on how to identify enhanced IMO extended temperature range parts, please refer to **KBA235887**.
14. Evaluated by characterization. Does not take into account soldering or board-level effects.

5.6.4 Internal Low-speed Oscillator

Table 31 ILO DC specifications

(Guaranteed by Design)

Spec ID#	Parameter	Description	Min	Typ	Max	Unit	Details/Conditions
SID231	I_{ILO1}	ILO operating current	–	0.3	1.05	µA	–

Table 32 ILO AC Specifications

Spec ID#	Parameter	Description	Min	Typ	Max	Unit	Details/Conditions
SID234[11]	$T_{STARTILO1}$	ILO startup time	–	–	2	ms	–
SID236[11]	$T_{ILODUTY}$	ILO duty cycle	40	50	60	%	–
SID237	$F_{ILOTRIM1}$	ILO frequency range	20	40	80	kHz	–

5.6.5 Watch Crystal Oscillator (WCO)

Table 33 WCO Specifications

Spec ID#	Parameter	Description	Min	Typ	Max	Unit	Details / Conditions
SID398	FWCO	Crystal frequency	–	32.768	–	kHz	–
SID399	FTOL	Frequency tolerance	–	50	250	ppm	With 20-ppm crystal
SID400	ESR	Equivalent series resistance	–	50	–	kΩ	–
SID401	PD	Drive level	–	–	1	µW	–
SID402	TSTART	Startup time	–	–	500	ms	–
SID403	CL	Crystal load capacitance	6	–	12.5	pF	–
SID404	C0	Crystal shunt capacitance	–	1.35	–	pF	–
SID405	IWCO1	Operating current (high power mode)	–	–	8	µA	–

5.6.6 External clock

Table 34 External clock specifications

Spec ID#	Parameter	Description	Min	Typ	Max	Unit	Details/Conditions
SID305[15]	ExtClkFreq	Block current	0	–	48	MHz	–
SID306[15]	ExtClkDuty	Duty cycle; measured at $V_{DD/2}$	45	–	55	%	–

Note
15.Guaranteed by characterization.

5.6.7 External Crystal Oscillator and PLL

Table 35 External Crystal Oscillator (ECO) specifications

Spec ID#	Parameter	Description	Min	Typ	Max	Unit	Details/Conditions
SID316[15]	IECO1	Block current	–	–	1.5	mA	–
SID317[15]	FECO	Crystal frequency range	4	–	33	MHz	–

Table 36 PLL specifications

Spec ID#	Parameter	Description	Min	Typ	Max	Unit	Details / Conditions
SID410	IDD_PLL_48	In = 3 MHz, Out = 48 MHz	–	530	610	µA	–
SID411	IDD_PLL_24	In = 3 MHz, Out = 24 MHz	–	300	405	µA	–
SID412	Fpllin	PLL input frequency	1	–	48	MHz	–
SID413	Fpllint	PLL intermediate frequency; prescaler out	1	–	3	MHz	–
SID414	Fpllvco	VCO output frequency before post-divide	22.5	–	104	MHz	–
SID415	Divvco	VCO Output post-divider range; PLL output frequency is Fpplvco/Divvco	1	–	8		–
SID416	Plllocktime	Lock time at startup	–	–	250	µs	–
SID417	Jperiod_1	Period jitter for VCO ≥ 67 MHz	–	–	150	ps	Guaranteed by design
SID416A	Jperiod_2	Period jitter for VCO ≤ 67 MHz	–	–	200	ps	Guaranteed by design

5.6.8 System clock

Table 37 System clock spec

Spec ID#	Parameter	Description	Min	Typ	Max	Unit	Details/Conditions
SID262[16]	$T_{CLKSWITCH}$	System clock source switching time	3	–	4	Periods	–

5.6.9 Smart I/O

Table 38 Smart I/O pass-through time (Delay in Bypass mode)

Spec ID#	Parameter	Description	Min	Typ	Max	Unit	Details / Conditions
SID252	PRG_BYPASS	Max delay added by Smart I/O in bypass mode	–	–	1.6	ns	–

Note
16.Guaranteed by characterization.

6 Ordering information

The marketing part numbers for the PSoC™ 4500S devices are listed in the following table.

Category	MPN	Feature															Package			Temp Range (°C)
		Max CPU Speed (MHz)	Flash (KB)	SRAM (KB)	Divide and Square Root Accelerator	Op-amp (CTBm)	12-bit SAR ADC	SAR ADC Sample Rate	CapSense	Direct LCD Drive	LP Comparators	TCPWM Blocks	SCB Blocks	ECO	Smart IOs	GPIO	48-TQFP	64-TQFP (0.5mm pitch)	64-TQFP (0.8mm pitch)	
45x6	CY8C4546AZI-S473	48	64	16	X	2	2	1 Msps	–	X	2	8	4	X	16	38	X	–	–	-40 to 85
	CY8C4546AZI-S475	48	64	16	X	3	2	1 Msps	–	X	2	8	5	X	16	53	–	X	–	-40 to 85
	CY8C4546AXI-S475	48	64	16	X	3	2	1 Msps	–	X	2	8	5	X	16	53	–	–	X	-40 to 85
45x7	CY8C4547AZI-S453	48	128	32	X	2	1	1 Msps	–	X	2	8	4	X	16	38	X	–	–	-40 to 85
	CY8C4547AZQ-S453	48	128	32	X	2	1	1 Msps	–	X	2	8	4	X	16	38	X	–	–	-40 to 105
	CY8C4547AZI-S455	48	128	32	X	2	1	1 Msps	–	X	2	8	5	X	16	53	–	X	–	-40 to 85
	CY8C4547AZQ-S455	48	128	32	X	2	1	1 Msps	–	X	2	8	5	X	16	53	–	X	–	-40 to 105
	CY8C4547AZI-S463	48	128	32	X	2	1	1 Msps	X	X	2	8	4	X	16	38	X	–	–	-40 to 85
	CY8C4547AZI-S465	48	128	32	X	3	1	1 Msps	X	X	2	8	5	X	16	53	–	X	–	-40 to 85
	CY8C4547AZI-S473	48	128	32	X	2	2	1 Msps	–	X	2	8	4	X	16	38	X	–	–	-40 to 85
	CY8C4547AZQ-S473	48	128	32	X	2	2	1 Msps	–	X	2	8	4	X	16	38	X	–	–	-40 to 105
	CY8C4547AZI-S475	48	128	32	X	3	2	1 Msps	–	X	2	8	5	X	16	53	–	X	–	-40 to 85
	CY8C4547AZQ-S475	48	128	32	X	3	2	1 Msps	–	X	2	8	5	X	16	53	–	X	–	-40 to 105
	CY8C4547AXI-S475	48	128	32	X	3	2	1 Msps	–	X	2	8	5	X	16	53	–	–	X	-40 to 85
	CY8C4547AXQ-S475	48	128	32	X	3	2	1 Msps	–	X	2	8	5	X	16	53	–	–	X	-40 to 105
45x8	CY8C4548AZI-S475	48	256	32	X	3	2	1 Msps	–	X	2	8	5	X	16	53	–	X	–	-40 to 85
	CY8C4548AXI-S475	48	256	32	X	3	2	1 Msps	–	X	2	8	5	X	16	53	–	–	X	-40 to 85
	CY8C4548AZI-S483	48	256	32	X	2	2	1 Msps	X	X	2	8	4	X	16	38	X	–	–	-40 to 85
	CY8C4548AZQ-S483	48	256	32	X	2	2	1 Msps	X	X	2	8	4	X	16	38	X	–	–	-40 to 105
	CY8C4548AZI-S485	48	256	32	X	3	2	1 Msps	X	X	2	8	5	X	16	53	–	X	–	-40 to 85
	CY8C4548AZQ-S485	48	256	32	X	3	2	1 Msps	X	X	2	8	5	X	16	53	–	X	–	-40 to 105
	CY8C4548AXI-S485	48	256	32	X	3	2	1 Msps	X	X	2	8	5	X	16	53	–	–	X	-40 to 85
	CY8C4548AXQ-S485	48	256	32	X	3	2	1 Msps	X	X	2	8	5	X	16	53	–	–	X	-40 to 105

Ordering information

The nomenclature used in the preceding table is based on the following part numbering convention:

Field	Description	Values	Meaning
CY8C	Cypress prefix		
4	Architecture	4	PSoC™ 4
A	Family	1	4500S Family
B	CPU speed	2	24 MHz
		4	48 MHz
C	Flash capacity	4	16 KB
		5	32 KB
		6	64 KB
		7	128 KB
DE	Package code	AX	TQFP (0.8-mm pitch)
		AZ	TQFP (0.5-mm pitch)
		LQ	QFN
		PV	SSOP
		FN	CSP
F	Temperature range	I	Industrial
		Q	Extended industrial
S	Series designator	S	PSoC™ 4 S-Series
		M	PSoC™ 4 M-Series
		L	PSoC™ 4 L-Series
		BL	PSoC™ 4 BLE-Series
XYZ	Attributes Code	000-999	Code of feature set in the specific family

The following is an example of a part number:

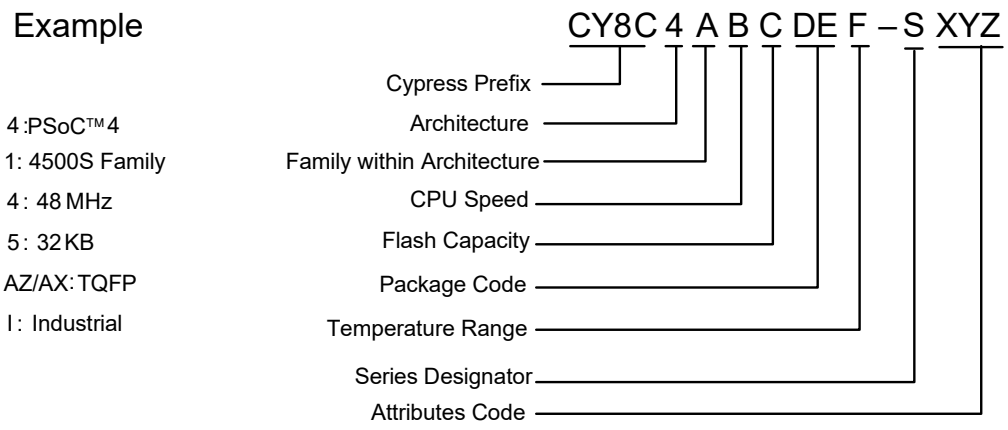

7 Packaging

The PSoC™ 4500S will be offered in 48 TQFP, 64 TQFP Normal pitch, and 64 TQFP fine pitch packages. Package dimensions and Cypress drawing numbers are in the following table.

Table 39 Package list

Spec ID#	Package	Description	Package Dwg
BID20	64-pin TQFP	14 × 14 × 1.4-mm height with 0.8-mm pitch	51-85046
BID27	64-pin TQFP	10 × 10 × 1.6-mm height with 0.5-mm pitch	51-85051
BID70	48-pin TQFP	7 × 7 × 1.4-mm height with 0.5-mm pitch	51-85135

Table 40 Package thermal characteristics

Parameter	Description	Package	Min	Typ	Max	Unit
T_A	Operating ambient temperature		–40	25	105	°C
T_J	Operating junction temperature		–40	–	125	°C
T_{JA}	Package θ_{JA}	64-pin TQFP (0.5-mm pitch)	–	46	–	°C/Watt
T_{JC}	Package θ_{JC}	64-pin TQFP (0.5-mm pitch)	–	10	–	°C/Watt
T_{JA}	Package θ_{JA}	64-pin TQFP (0.8-mm pitch)	–	36.8	–	°C/Watt
T_{JC}	Package θ_{JC}	64-pin TQFP (0.8-mm pitch)	–	9.4	–	°C/Watt
T_{JA}	Package θ_{JA}	48-pin TQFP (0.5-mm pitch)	–	39.4	–	°C/Watt
T_{JC}	Package θ_{JC}	48-pin TQFP (0.5-mm pitch)	–	9.3	–	°C/Watt

Table 41 Solder reflow peak temperature

Package	Maximum peak temperature	Maximum time at peak temperature
All	260 °C	30 seconds

Table 42 Package moisture sensitivity level (MSL), IPC/JEDEC J-STD-020

Package	MSL
All	MSL 3

7.1 Package diagrams

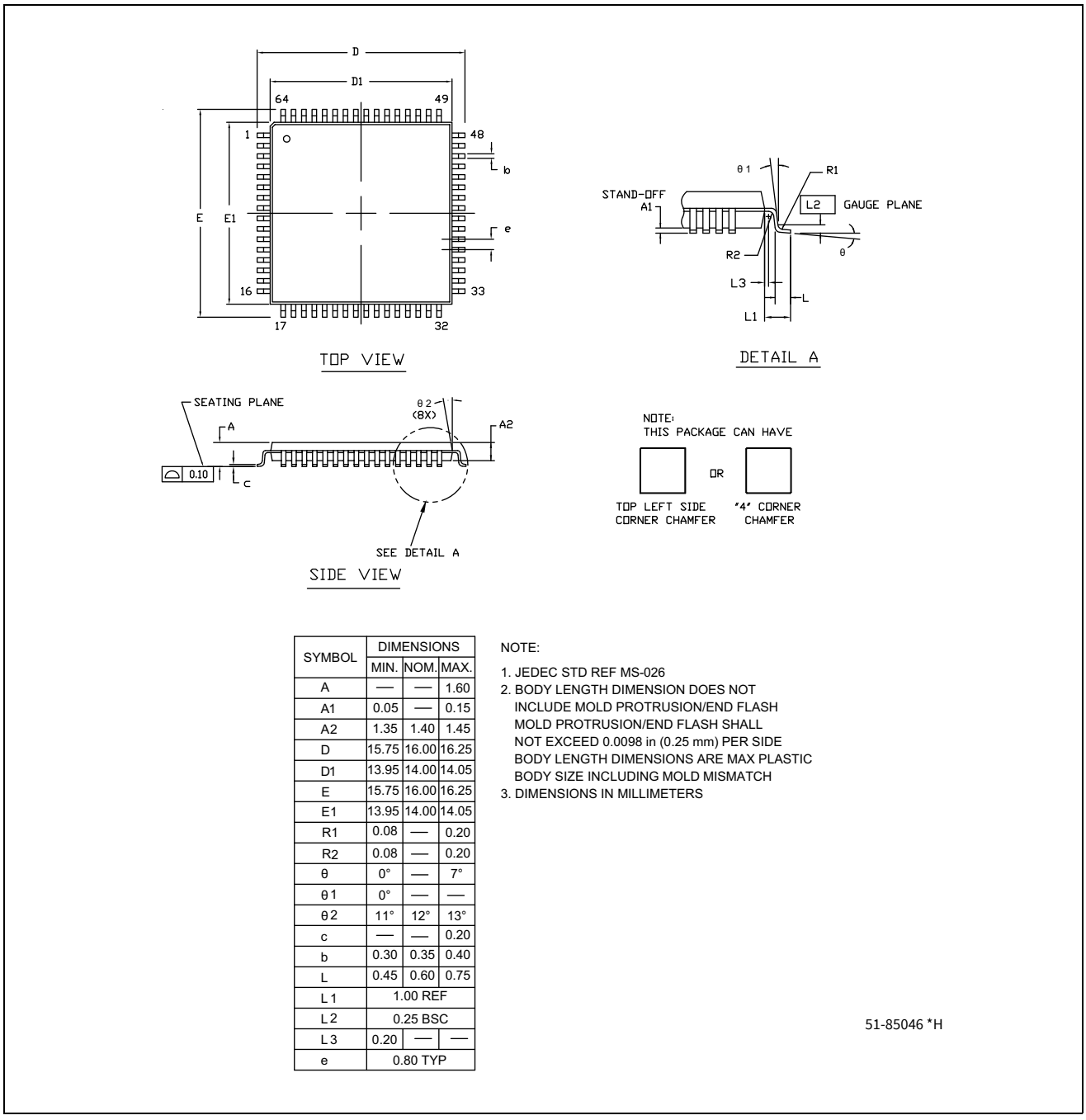

SYMBOL	DIMENSIONS		
	MIN.	NOM.	MAX.
A	—	—	1.60
A1	0.05	—	0.15
A2	1.35	1.40	1.45
D	15.75	16.00	16.25
D1	13.95	14.00	14.05
E	15.75	16.00	16.25
E1	13.95	14.00	14.05
R1	0.08	—	0.20
R2	0.08	—	0.20
θ	0°	—	7°
θ1	0°	—	—
θ2	11°	12°	13°
c	—	—	0.20
b	0.30	0.35	0.40
L	0.45	0.60	0.75
L1	1.00 REF		
L2	0.25 BSC		
L3	0.20	—	—
e	0.80 TYP		

NOTE:
1. JEDEC STD REF MS-026
2. BODY LENGTH DIMENSION DOES NOT INCLUDE MOLD PROTRUSION/END FLASH MOLD PROTRUSION/END FLASH SHALL NOT EXCEED 0.0098 in (0.25 mm) PER SIDE BODY LENGTH DIMENSIONS ARE MAX PLASTIC BODY SIZE INCLUDING MOLD MISMATCH
3. DIMENSIONS IN MILLIMETERS

51-85046 *H

Figure 7 64-pin TQFP package (0.8-mm pitch) outline

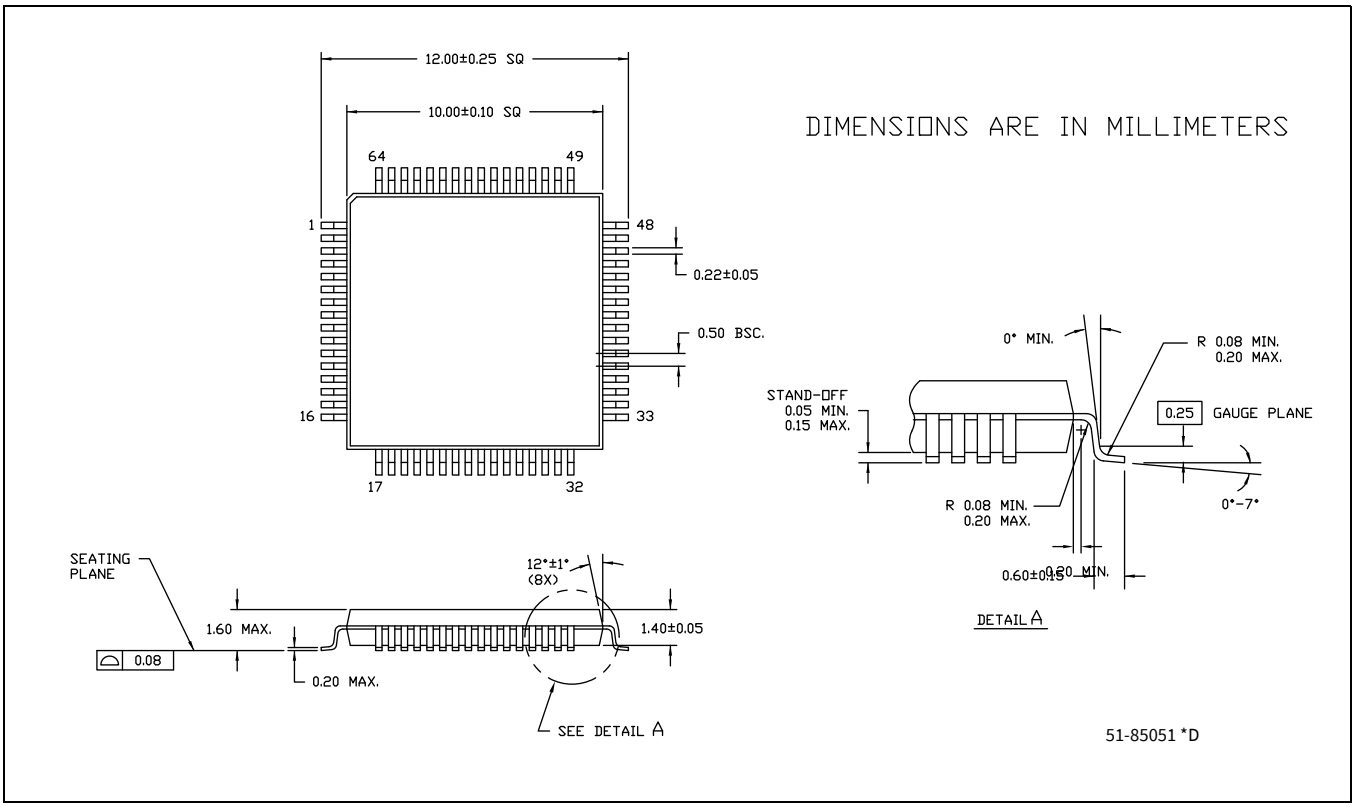

Figure 8 64-pin TQFP package (0.5-mm pitch) outline

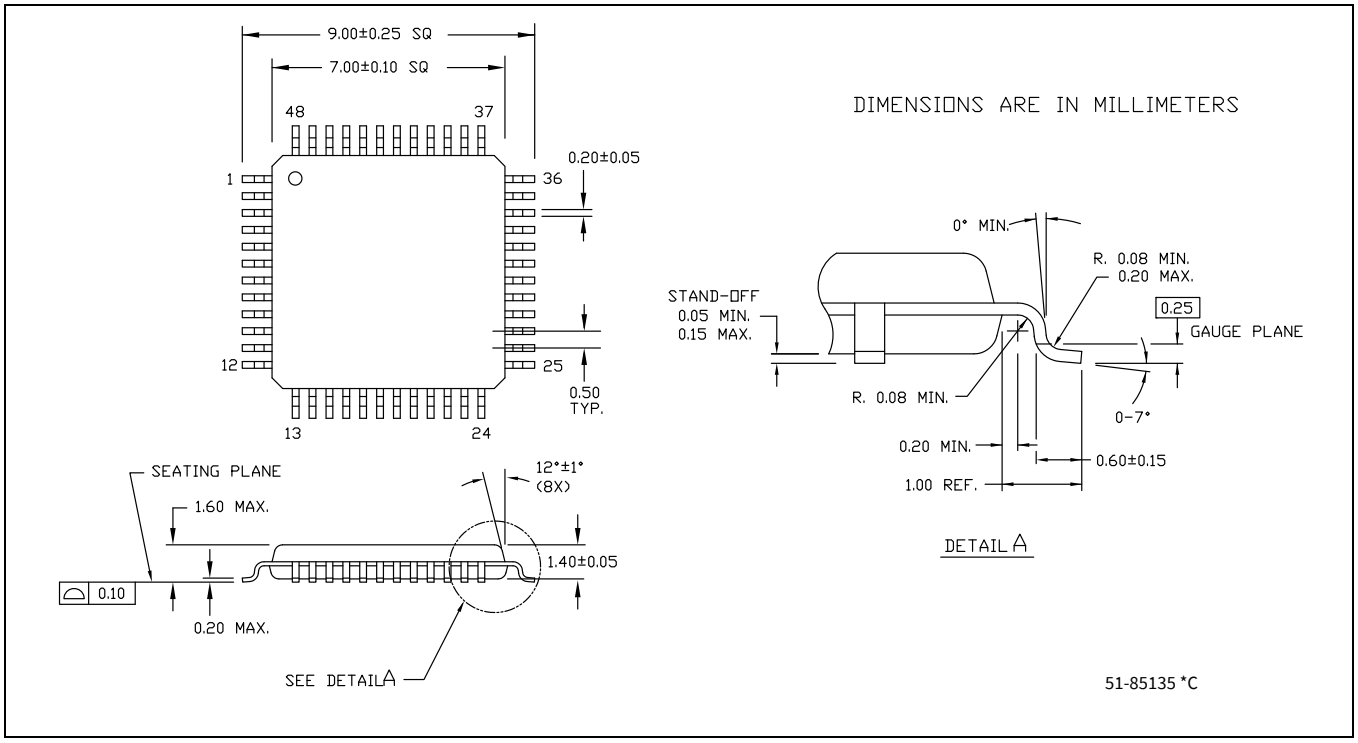

Figure 9 48-Pin 7 × 7 × 1.4 mm TQFP package outline

8 Acronyms

Table 43 Acronyms used in this document

Acronym	Description
abus	analog local bus
ADC	analog-to-digital converter
AG	analog global
AHB	AMBA (advanced microcontroller bus architecture) high-performance bus, an Arm data transfer bus
ALU	arithmetic logic unit
AMUXBUS	analog multiplexer bus
API	application programming interface
APSR	application program status register
Arm®	advanced RISC machine, a CPU architecture
ATM	automatic thump mode
BW	bandwidth
CAN	Controller Area Network, a communications protocol
CMRR	common-mode rejection ratio
CPU	central processing unit
CRC	cyclic redundancy check, an error-checking protocol
DAC	digital-to-analog converter, see also IDAC, VDAC
DFB	digital filter block
DIO	digital input/output, GPIO with only digital capabilities, no analog. See GPIO.
DMIPS	Dhrystone million instructions per second
DMA	direct memory access, see also TD
DNL	differential nonlinearity, see also INL
DNU	do not use
DR	port write data registers
DSI	digital system interconnect
DWT	data watchpoint and trace
ECC	error correcting code
ECO	external crystal oscillator
EEPROM	electrically erasable programmable read-only memory
EMI	electromagnetic interference
EMIF	external memory interface
EOC	end of conversion
EOF	end of frame
EPSR	execution program status register
ESD	electrostatic discharge
ETM	embedded trace macrocell

Table 43 Acronyms used in this document *(continued)*

Acronym	Description
FIR	finite impulse response, see also IIR
FPB	flash patch and breakpoint
FS	full-speed
GPIO	general-purpose input/output, applies to a PSoC™ pin
HVI	high-voltage interrupt, see also LVI, LVD
IC	integrated circuit
IDAC	current DAC, see also DAC, VDAC
IDE	integrated development environment
I^2C, or IIC	Inter-Integrated Circuit, a communications protocol
IIR	infinite impulse response, see also FIR
ILO	internal low-speed oscillator, see also IMO
IMO	internal main oscillator, see also ILO
INL	integral nonlinearity, see also DNL
I/O	input/output, see also GPIO, DIO, SIO, USBIO
IPOR	initial power-on reset
IPSR	interrupt program status register
IRQ	interrupt request
ITM	instrumentation trace macrocell
LCD	liquid crystal display
LIN	Local Interconnect Network, a communications protocol.
LR	link register
LUT	lookup table
LVD	low-voltage detect, see also LVI
LVI	low-voltage interrupt, see also HVI
LVTTL	low-voltage transistor-transistor logic
MAC	multiply-accumulate
MCU	microcontroller unit
MISO	master-in slave-out
NC	no connect
NMI	nonmaskable interrupt
NRZ	non-return-to-zero
NVIC	nested vectored interrupt controller
NVL	nonvolatile latch, see also WOL
opamp	operational amplifier
PAL	programmable array logic, see also PLD
PC	program counter
PCB	printed circuit board
PGA	programmable gain amplifier

Table 43 Acronyms used in this document *(continued)*

Acronym	Description
PHUB	peripheral hub
PHY	physical layer
PICU	port interrupt control unit
PLA	programmable logic array
PLD	programmable logic device, see also PAL
PLL	phase-locked loop
PMDD	package material declaration data sheet
POR	power-on reset
PRES	precise power-on reset
PRS	pseudo random sequence
PS	port read data register
PSoC™	Programmable System-on-Chip™
PSRR	power supply rejection ratio
PWM	pulse-width modulator
RAM	random-access memory
RISC	reduced-instruction-set computing
RMS	root-mean-square
RTC	real-time clock
RTL	register transfer language
RTR	remote transmission request
RX	receive
SAR	successive approximation register
SC/CT	switched capacitor/continuous time
SCL	I^2C serial clock
SDA	I^2C serial data
S/H	sample and hold
SINAD	signal to noise and distortion ratio
SIO	special input/output, GPIO with advanced features. See GPIO.
SOC	start of conversion
SOF	start of frame
SPI	Serial Peripheral Interface, a communications protocol
SR	slew rate
SRAM	static random access memory
SRES	software reset
SWD	serial wire debug, a test protocol
SWV	single-wire viewer
TD	transaction descriptor, see also DMA
THD	total harmonic distortion

Table 43 Acronyms used in this document *(continued)*

Acronym	Description
TIA	transimpedance amplifier
TRM	technical reference manual
TTL	transistor-transistor logic
TX	transmit
UART	Universal Asynchronous Transmitter Receiver, a communications protocol
UDB	universal digital block
USB	Universal Serial Bus
USBIO	USB input/output, PSoC™ pins used to connect to a USB port
VDAC	voltage DAC, see also DAC, IDAC
WDT	watchdog timer
WOL	write once latch, see also NVL
WRES	watchdog timer reset
XRES	external reset I/O pin
XTAL	crystal

9 Document conventions

9.1 Units of measure

Table 44 Units of measure

Symbol	Unit of measure
°C	degrees Celsius
dB	decibel
fF	femto farad
Hz	hertz
KB	1024 bytes
kbps	kilobits per second
Khr	kilohour
kHz	kilohertz
kΩ	kilo ohm
ksps	kilosamples per second
LSB	least significant bit
Mbps	megabits per second
MHz	megahertz
MΩ	mega-ohm
Msps	megasamples per second
µA	microampere
µF	microfarad
µH	microhenry
µs	microsecond
µV	microvolt
µW	microwatt
mA	milliampere
ms	millisecond
mV	millivolt
nA	nanoampere
ns	nanosecond
nV	nanovolt
Ω	ohm
pF	picofarad
ppm	parts per million
ps	picosecond
s	second
sps	samples per second
sqrtHz	square root of hertz
V	volt

Revision history

Document version	Date of release	Description of changes
*B	2020-03-18	Release to web.
*C	2020-12-23	Added ModusToolbox™ in **Features**. Updated **Development ecosystem**. Updated Conditions for SR_POWER_UP in **Table 26**.
*D	2022-07-28	Updated **Table 30**: Updated spec SID223 and SID223A. Added specs SID223B through SID223D. Converted to Infineon template.
*E	2023-01-23	Updated the footnotes in **IMO AC specifications**.

Trademarks
All referenced product or service names and trademarks are the property of their respective owners.

Edition 2023-01-23
Published by

Infineon Technologies AG
81726 Munich, Germany

© 2023 Infineon Technologies AG. All Rights Reserved.

Do you have a question about this document?
Email:
erratum@infineon.com

Document reference
002-26354 Rev. *E

IMPORTANT NOTICE

The information given in this document shall in no event be regarded as a guarantee of conditions or characteristics ("Beschaffenheitsgarantie").

With respect to any examples, hints or any typical values stated herein and/or any information regarding the application of the product, Infineon Technologies hereby disclaims any and all warranties and liabilities of any kind, including without limitation warranties of non-infringement of intellectual property rights of any third party.

In addition, any information given in this document is subject to customer's compliance with its obligations stated in this document and any applicable legal requirements, norms and standards concerning customer's products and any use of the product of Infineon Technologies in customer's applications.

The data contained in this document is exclusively intended for technically trained staff. It is the responsibility of customer's technical departments to evaluate the suitability of the product for the intended application and the completeness of the product information given in this document with respect to such application.

WARNINGS

Due to technical requirements products may contain dangerous substances. For information on the types in question please contact your nearest Infineon Technologies office.

Except as otherwise explicitly approved by Infineon Technologies in a written document signed by authorized representatives of Infineon Technologies, Infineon Technologies' products may not be used in any applications where a failure of the product or any consequences of the use thereof can reasonably be expected to result in personal injury.