PSoC® 3: CY8C36 Automotive Family Datasheet

Programmable System-on-Chip (PSoC®)

General Description

With its unique array of configurable blocks, PSoC® 3 is a true system level solution providing microcontroller unit (MCU), memory, analog, and digital peripheral functions in a single chip while being AEC-Q100 compliant. The CY8C36 family offers a modern method of signal acquisition, signal processing, and control with high accuracy, high bandwidth, and high flexibility. Analog capability spans the range from thermocouples (near DC voltages) to ultrasonic signals. The CY8C36 family can handle dozens of data acquisition channels and analog inputs on every general-purpose input/output (GPIO) pin. The CY8C36 family is also a high-performance configurable digital system with some part numbers including interfaces such as USB, multimaster inter-integrated circuit (I^2C), and controller area network (CAN). In addition to communication interfaces, the CY8C36 family has an easy to configure logic array, flexible routing to all I/O pins, and a high-performance single cycle 8051 microprocessor core. You can easily create system-level designs using a rich library of prebuilt components and boolean primitives using PSoC Creator™, a hierarchical schematic design entry tool. The CY8C36 family provides unparalleled opportunities for analog and digital bill of materials integration while easily accommodating last minute design changes through simple firmware updates.

Features

- Single cycle 8051 CPU
  - DC to 67 MHz operation
  - Multiply and divide instructions
  - Flash program memory, up to 64 KB, 100,000 write cycles, 20 years retention, and multiple security features
  - 512-byte flash cache
  - Up to 8-KB flash error correcting code (ECC) or configuration storage
  - Up to 8 KB SRAM
  - Up to 2 KB electrically erasable programmable read-only memory (EEPROM), 1 M cycles, and 20 years retention
  - 24-channel direct memory access (DMA) with multilayer AHB[1] bus access
    - Programmable chained descriptors and priorities
    - High bandwidth 32-bit transfer support
- Low voltage, ultra low-power
  - Wide operating voltage range: 1.71 V to 5.5 V
  - 0.8 mA at 3 MHz, 1.2 mA at 6 MHz, and 6.6 mA at 50 MHz
  - Low-power modes including:
    - 1-µA sleep mode with real time clock and low-voltage detect (LVD) interrupt
    - 200-nA hibernate mode with RAM retention
- Versatile I/O system
  - 29 to 72 I/O (62 GPIOs, eight special input/outputs (SIO), two USBIOs[2])
  - Any GPIO to any digital or analog peripheral routability
  - LCD direct drive from any GPIO, up to 46 × 16 segments[2]
  - CapSense® support from any GPIO[3]
  - 1.2-V to 5.5-V I/O interface voltages, up to four domains
  - Maskable, independent IRQ on any pin or port
  - Schmitt-trigger transistor-transistor logic (TTL) inputs
  - All GPIO configurable as open drain high/low, pull-up/pull-down, High Z, or strong output
  - Configurable GPIO pin state at power-on reset (POR)
  - 25 mA sink on SIO
- Digital peripherals
  - 20 to 24 programmable logic device (PLD) based universal digital blocks (UDB)
  - Full CAN 2.0b 16 Rx, 8 Tx buffers[2]
  - USB 2.0 certified Full-Speed (FS) 12 Mbps peripheral interface (TID#40770053) using internal oscillator[2]
  - Up to four 16-bit configurable timer, counter, and PWM blocks
  - 67 MHz, 24-bit fixed point digital filter block (DFB) to implement FIR and IIR filters
  - Library of standard peripherals
    - 8-, 16-, 24-, and 32-bit timers, counters, and PWMs
    - Serial peripheral interface (SPI), universal asynchronous transmitter receiver (UART), and I^2C
    - Many others available in catalog
  - Library of advanced peripherals
    - Cyclic redundancy check (CRC)
    - Pseudo random sequence (PRS) generator
    - Local interconnect network (LIN) bus 2.0
    - Quadrature decoder
- Analog peripherals (1.71 V ≤ VDDA ≤ 5.5 V)
  - 1.024 V ± 0.1% internal voltage reference across –40 °C to +85 °C
  - Configurable delta-sigma ADC with 8- to 12-bit resolution
    - Sample rates up to 192 ksps
    - Programmable gain stage: ×0.25 to ×16
    - 12-bit mode, 192 ksps, 66-dB signal to noise and distortion ratio (SINAD), ±1-bit INL/DNL
  - Up to four 8-bit, 8-Msps IDACs or 1-Msps VDACs
  - Four comparators with 95-ns response time
  - Up to four uncommitted opamps with 25-mA drive capability
  - Up to four configurable multifunction analog blocks. Example configurations are programmable gain amplifier (PGA), transimpedance amplifier (TIA), mixer, and sample and hold
  - CapSense support
- Programming, debug, and trace
  - JTAG (4-wire), serial wire debug (SWD) (2-wire), and single wire viewer (SWV) interfaces
  - Eight address and one data breakpoint
  - 4-KB instruction trace buffer
  - Bootloader programming supportable through I^2C, SPI, UART, USB, and other interfaces
- Precision, programmable clocking
  - 3- to 62-MHz internal oscillator over full temperature and voltage range
  - 4- to 25-MHz crystal oscillator for crystal PPM accuracy
  - Internal PLL clock generation up to 67 MHz
  - 32.768-kHz watch crystal oscillator
  - Low-power internal oscillator at 1, 33, and 100 kHz
- Temperature and packaging
  - –40 °C to +85 °C degrees automotive temperature
  - –40 °C to +125 °C Extended temperature range
  - 48-pin SSOP, and 100-pin TQFP package options
  - AEC-Q100 compliant.

Notes
1. AHB – AMBA (advanced microcontroller bus architecture) high-performance bus, an ARM data transfer bus
2. This feature on select devices only. See Ordering Information on page 133 for details.
3. GPIOs with opamp outputs are not recommended for use with CapSense.

Contents

1. Architectural Overview 3
2. Pinouts 5
3. Pin Descriptions 9
4. CPU 10
4.1 8051 CPU 10
4.2 Addressing Modes 10
4.3 Instruction Set 10
4.4 DMA and PHUB 15
4.5 Interrupt Controller 17
5. Memory 21
5.1 Static RAM 21
5.2 Flash Program Memory 21
5.3 Flash Security 21
5.4 EEPROM 21
5.5 Nonvolatile Latches (NVLs) 22
5.6 External Memory Interface 23
5.7 Memory Map 24
6. System Integration 26
6.1 Clocking System 26
6.2 Power System 29
6.3 Reset 31
6.4 I/O System and Routing 33
7. Digital Subsystem 40
7.1 Example Peripherals 40
7.2 Universal Digital Block 42
7.3 UDB Array Description 45
7.4 DSI Routing Interface Description 45
7.5 CAN 47
7.6 USB 49
7.7 Timers, Counters, and PWMs 49
7.8 I^2C 50
7.9 Digital Filter Block 51
8. Analog Subsystem 51
8.1 Analog Routing 52
8.2 Delta-sigma ADC 54
8.3 Comparators 55
8.4 Opamps 56
8.5 Programmable SC/CT Blocks 56
8.6 LCD Direct Drive 57
8.7 CapSense 58
8.8 Temp Sensor 58
8.9 DAC 59
8.10 Up/Down Mixer 59
8.11 Sample and Hold 59
9. Programming, Debug Interfaces, Resources 60
9.1 JTAG Interface 60
9.2 Serial Wire Debug Interface 62
9.3 Debug Features 63
9.4 Trace Features 63
9.5 Single Wire Viewer Interface 63
9.6 Programming Features 63
9.7 Device Security 63
10. Development Support 64
10.1 Documentation 64
10.2 Online 64
10.3 Tools 64
11. Electrical Specifications 65
11.1 Absolute Maximum Ratings 65
11.2 Device Level Specifications 66
11.3 Power Regulators 72
11.4 Inputs and Outputs 74
11.5 Analog Peripherals 86
11.6 Digital Peripherals 114
11.7 Memory 120
11.8 PSoC System Resources 126
11.9 Clocking 129
12. Ordering Information 134
12.1 Part Numbering Conventions 135
13. Packaging 136
14. Acronyms 138
15. Reference Documents 139
16. Document Conventions 140
16.1 Units of Measure 140
17. Revision History 141
18. Sales, Solutions, and Legal Information 143

1. Architectural Overview

Introducing the CY8C36 family of ultra low-power, flash Programmable System-on-Chip (PSoC®) devices, part of a scalable 8-bit PSoC 3 and 32-bit PSoC 5 platform. The CY8C36 family provides configurable blocks of analog, digital, and interconnect circuitry around a CPU subsystem. The combination of a CPU with a flexible analog subsystem, digital subsystem, routing, and I/O enables a high level of integration in a wide variety of automotive consumer, industrial, and medical applications.

Figure 1-1. Simplified Block Diagram

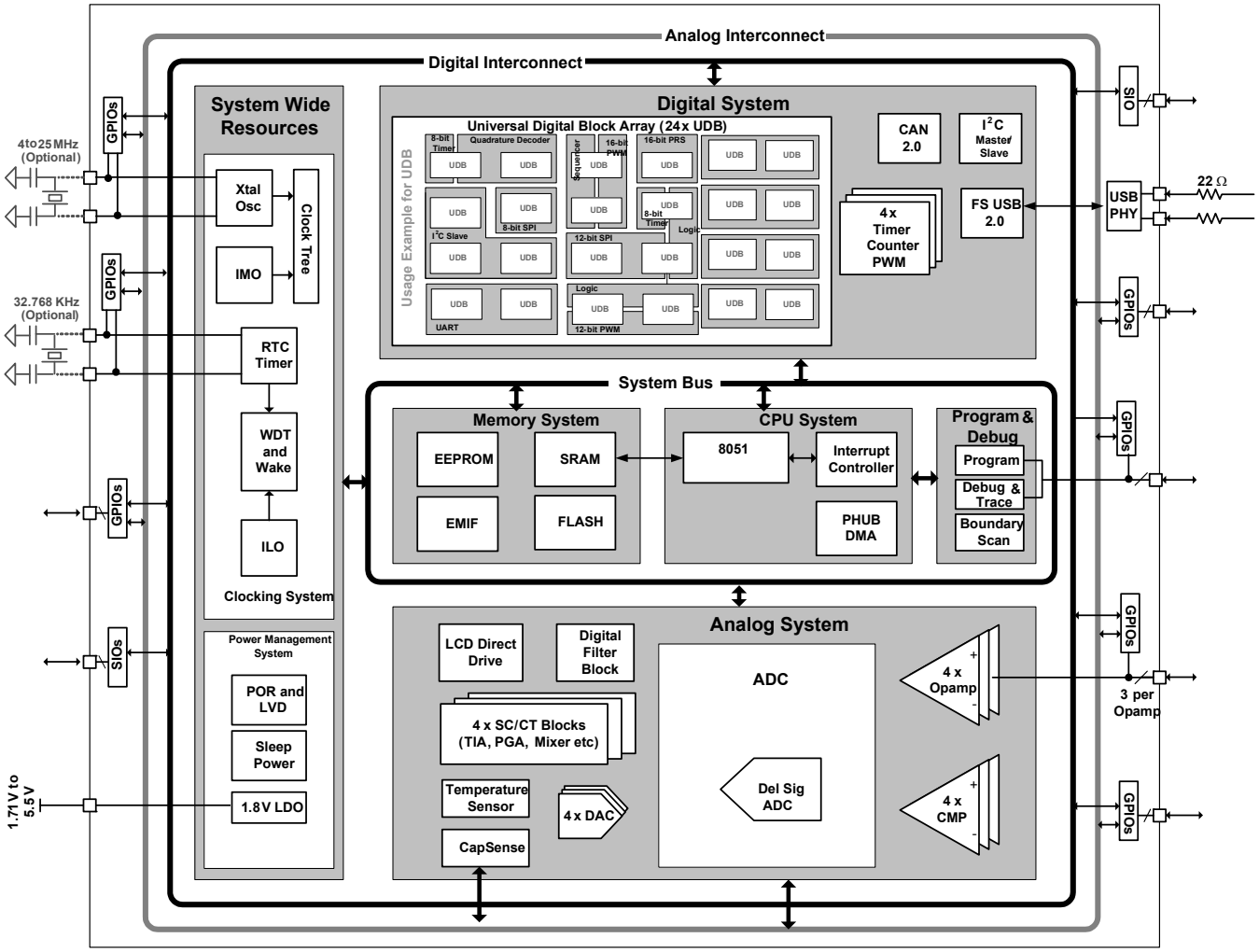

Figure 1-1 illustrates the major components of the CY8C36 family. They are:

- 8051 CPU subsystem
- Nonvolatile subsystem
- Programming, debug, and test subsystem
- Inputs and outputs
- Clocking
- Power
- Digital subsystem
- Analog subsystem

PSoC's digital subsystem provides half of its unique configurability. It connects a digital signal from any peripheral to any pin through the digital system interconnect (DSI). It also provides functional flexibility through an array of small, fast, low-power UDBs. PSoC Creator provides a library of prebuilt and tested standard digital peripherals (UART, SPI, LIN, PRS, CRC, timer, counter, PWM, AND, OR, and so on) that are mapped to the UDB array. You can also easily create a digital circuit using boolean primitives by means of graphical design entry. Each UDB contains programmable array logic (PAL)/programmable logic device (PLD) functionality, together with a small state machine engine to support a wide variety of peripherals.

In addition to the flexibility of the UDB array, PSoC also provides configurable digital blocks targeted at specific functions. For the CY8C36 family these blocks can include four 16-bit timers, counters, and PWM blocks; I²C slave, master, and multimaster; FS USB; and Full CAN 2.0b.

For more details on the peripherals see the "Example Peripherals" section on page 40 of this data sheet. For information on UDBs, DSI, and other digital blocks, see the "Digital Subsystem" section on page 40 of this data sheet.

PSoC's analog subsystem is the second half of its unique configurability. All analog performance is based on a highly accurate absolute voltage reference with less than 0.1-percent error over temperature and voltage. The configurable analog subsystem includes:

- Analog muxes
- Comparators
- Voltage references
- Analog-to-digital converter (ADC)
- Digital-to-analog converters (DACs)
- Digital filter block (DFB)

All GPIO pins can route analog signals into and out of the device using the internal analog bus. This allows the device to interface up to 62 discrete analog signals. The heart of the analog subsystem is a fast, accurate, configurable delta-sigma ADC with these features [4]:

- Less than 100 µV offset
- A gain error of 0.2 percent
- INL less than ±2 LSB
- DNL less than ±1 LSB
- SINAD better than 84 dB in 16-bit mode

This converter addresses a wide variety of precision analog applications, including some of the most demanding sensors. The output of the ADC can optionally feed the programmable DFB through the DMA without CPU intervention. You can configure the DFB to perform IIR and FIR digital filters and several user-defined custom functions. The DFB can implement filters with up to 64 taps. It can perform a 48-bit multiply-accumulate (MAC) operation in one clock cycle.

Four high-speed voltage or current DACs support 8-bit output signals at an update rate of up to 8 Msps. They can be routed out of any GPIO pin. You can create higher resolution voltage PWM DAC outputs using the UDB array. This can be used to create a pulse width modulated (PWM) DAC of up to 10 bits, at up to 48 kHz. The digital DACs in each UDB support PWM, PRS, or delta-sigma algorithms with programmable widths. In addition to the ADC, DACs, and DFB, the analog subsystem provides multiple:

- Uncommitted opamps
- Configurable switched capacitor/continuous time (SC/CT) blocks. These support:
  - Transimpedance amplifiers
  - Programmable gain amplifiers
  - Mixers
  - Other similar analog components

See the "Analog Subsystem" section on page 51 of this data sheet for more details.

PSoC's 8051 CPU subsystem is built around a single cycle pipelined 8051 8-bit processor running at up to 67 MHz. The CPU subsystem includes a programmable nested vector interrupt controller, DMA controller, and RAM. PSoC's nested vector interrupt controller provides low latency by allowing the CPU to vector directly to the first address of the interrupt service routine, bypassing the jump instruction required by other architectures. The DMA controller enables peripherals to exchange data without CPU involvement. This allows the CPU to run slower (saving power) or use those CPU cycles to improve the performance of firmware algorithms. The single cycle 8051 CPU runs ten times faster than a standard 8051 processor. The processor speed itself is configurable, allowing you to tune active power consumption for specific applications.

PSoC's nonvolatile subsystem consists of flash, byte-writeable EEPROM, and nonvolatile configuration options. It provides up to 64 KB of on-chip flash. The CPU can reprogram individual blocks of flash, enabling bootloaders. You can enable an error correcting code (ECC) for high reliability applications. A powerful and flexible protection model secures the user's sensitive information, allowing selective memory block locking for read and write protection. Up to 2 KB of byte-writeable EEPROM is available on-chip to store application data. Additionally, selected configuration options such as boot speed and pin drive mode are stored in nonvolatile memory. This allows settings to activate immediately after POR.

The three types of PSoC I/O are extremely flexible. All I/Os have many drive modes that are set at POR. PSoC also provides up to four I/O voltage domains through the VDDIO pins. Every GPIO has analog I/O, LCD drive[5], CapSense[6], flexible interrupt generation, slew rate control, and digital I/O capability. The SIOs on PSoC allow V_{OH} to be set independently of Vddio when used as outputs. When SIOs are in input mode they are high impedance. This is true even when the device is not powered or when the pin voltage goes above the supply voltage. This makes the SIO ideally suited for use on an I^2C bus where the PSoC may not be powered when other devices on the bus are. The SIO pins also have high current sink capability for applications such as LED drives. The programmable input threshold feature of the SIO can be used to make the SIO function as a general purpose analog comparator. For devices with Full-Speed USB the USB physical interface is also provided (USBIO). When not using USB these pins may also be used for limited digital functionality and device programming. All of the features of the PSoC I/Os are covered in detail in the "I/O System and Routing" section on page 33 of this data sheet.

The PSoC device incorporates flexible internal clock generators, designed for high stability and factory trimmed for high accuracy. The internal main oscillator (IMO) is the clock base for the system, and has 1-percent accuracy at 3 MHz. The IMO can be configured to run from 3 MHz up to 62 MHz. Multiple clock derivatives can be generated from the main clock frequency to meet application needs. The device provides a PLL to generate clock frequencies up to 67 MHz from the IMO, external crystal, or external reference clock.

Notes
4. Refer Electrical Specifications on page 65 for the detailed ADC specification across entire voltage range and temperature.
5. This feature on select devices only. See Ordering Information on page 133 for details.
6. GPIOs with opamp outputs are not recommended for use with CapSense.

It also contains a separate, very low-power internal low-speed oscillator (ILO) for the sleep and watchdog timers. A 32.768-kHz external watch crystal is also supported for use in real-time clock (RTC) applications. The clocks, together with programmable clock dividers, provide the flexibility to integrate most timing requirements.

The CY8C36 family supports a wide supply operating range from 1.71 V to 5.5 V. This allows operation from regulated supplies such as 1.8 V ± 5%, 2.5 V ±10%, 3.3 V ± 10%, or 5.0 V ± 10%, or directly from a wide range of battery types.

PSoC supports a wide range of low-power modes. These include a 200-nA hibernate mode with RAM retention and a 1-µA sleep mode with RTC. In the second mode, the optional 32.768-kHz watch crystal runs continuously and maintains an accurate RTC.

Power to all major functional blocks, including the programmable digital and analog peripherals, can be controlled independently by firmware. This allows low-power background processing when some peripherals are not in use. This, in turn, provides a total device current of only 1.2 mA when the CPU is running at 6 MHz, or 0.8 mA running at 3 MHz.

The details of the PSoC power modes are covered in the "Power System" section on page 29 of this data sheet.

PSoC uses JTAG (4-wire) or SWD (2-wire) interfaces for programming, debug, and test. The 1-wire SWV may also be used for 'printf' style debugging. By combining SWD and SWV, you can implement a full debugging interface with just three pins. Using these standard interfaces you can debug or program the PSoC with a variety of hardware solutions from Cypress or third party vendors. PSoC supports on-chip break points and 4-KB instruction and data race memory for debug. Details of the programming, test, and debugging interfaces are discussed in the "Programming, Debug Interfaces, Resources" section on page 60 of this data sheet.

2. Pinouts

Each VDDIO pin powers a specific set of I/O pins. (The USBIOs are powered from VDDD.) Using the VDDIO pins, a single PSoC can support multiple voltage levels, reducing the need for off-chip level shifters. The black lines drawn on the pinout diagrams in Figure 2-3 through Figure 2-4 show the pins that are powered by each VDDIO.

Each VDDIO may source up to 100 mA [7] total to its associated I/O pins, as shown in Figure 2-1.

Figure 2-1. VDDIO Current Limit

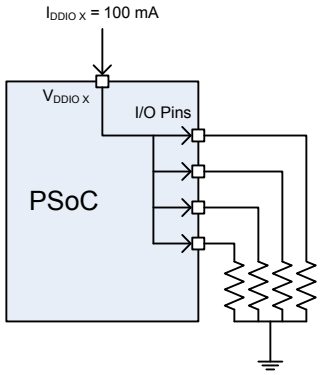

Conversely, for the 100-pin and 68-pin devices, the set of I/O pins associated with any VDDIO may sink up to 100 mA [7] total, as shown in Figure 2-2.

Figure 2-2. I/O Pins Current Limit

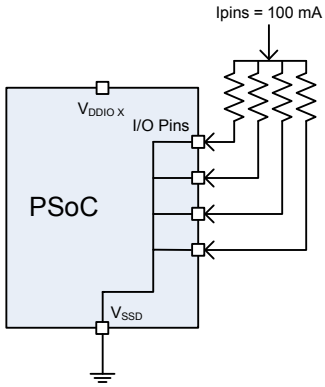

For the 48-pin devices, the set of I/O pins associated with VDDIO0 plus VDDIO2 may sink up to 100 mA [7] total. The set of I/O pins associated with VDDIO1 plus VDDIO3 may sink up to a total of 100 mA.

Note
7. The 100 mA source/ sink current per Vddio is valid only for temperature range of –40 °C to +85 °C. For extended temperature range of –40 °C to +125 °C, the maximum source or sink current per Vddio is 40 mA.

Figure 2-3. 48-pin SSOP Part Pinout

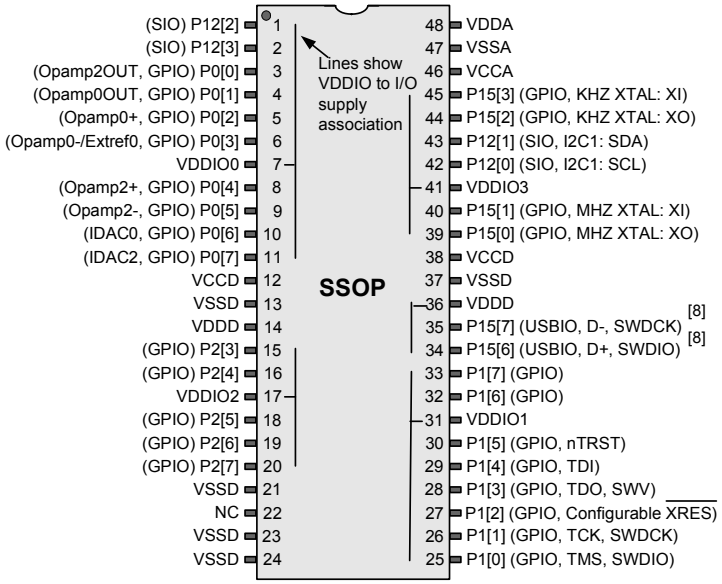

Note
8. Pins are Do Not Use (DNU) on devices without USB. The pin must be left floating.

Figure 2-4. 100-pin TQFP Part Pinout

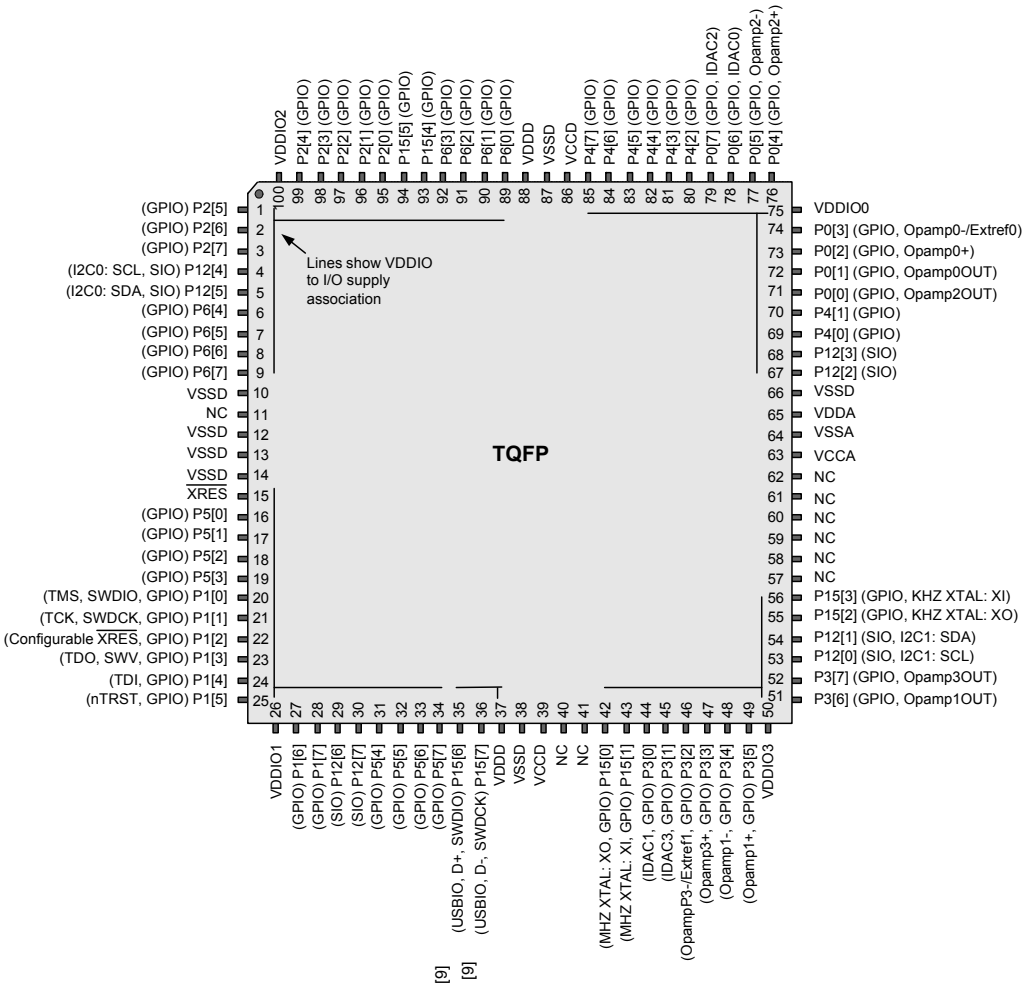

Figure 2-5 and Figure 2-6 show an example schematic and an example PCB layout, for the 100-pin TQFP part, for optimal analog performance on a two-layer board.

- The two pins labeled VDDD must be connected together.
- The two pins labeled VCCD must be connected together, with capacitance added, as shown in Figure 2-5 and Power System on page 29. The trace between the two VCCD pins should be as short as possible.
- The two pins labeled Vssd must be connected together.

For information on circuit board layout issues for mixed signals, refer to the application note, AN57821 - Mixed Signal Circuit Board Layout Considerations for PSoC® 3 and PSoC 5.

Note
9. Pins are Do Not Use (DNU) on devices without USB. The pin must be left floating.

Figure 2-5. Example Schematic for 100-pin TQFP Part with Power Connections

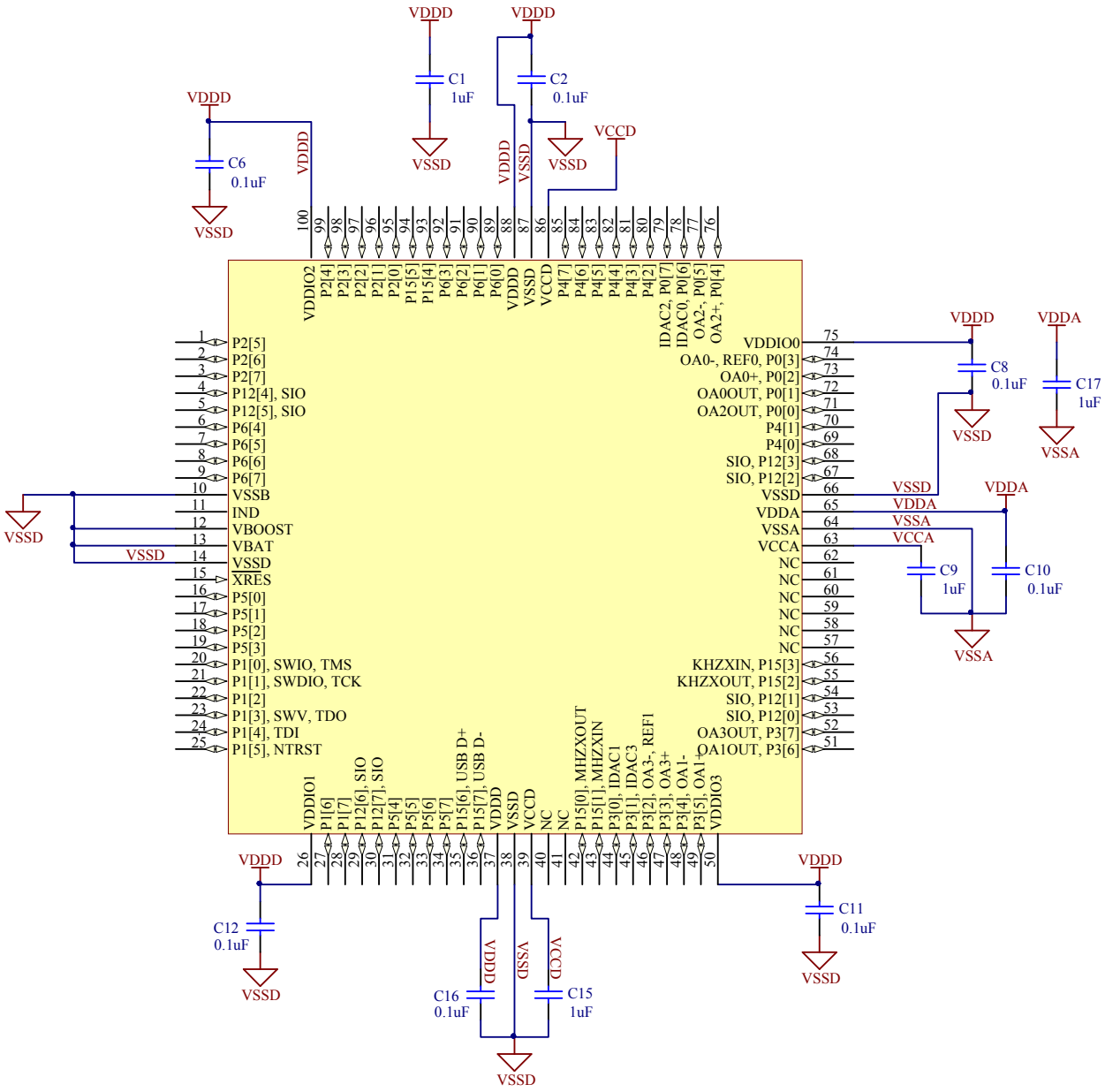

Note The two Vccd pins must be connected together with as short a trace as possible. A trace under the device is recommended, as shown in Figure 2-6 on page 9.

Figure 2-6. Example PCB Layout for 100-pin TQFP Part for Optimal Analog Performance

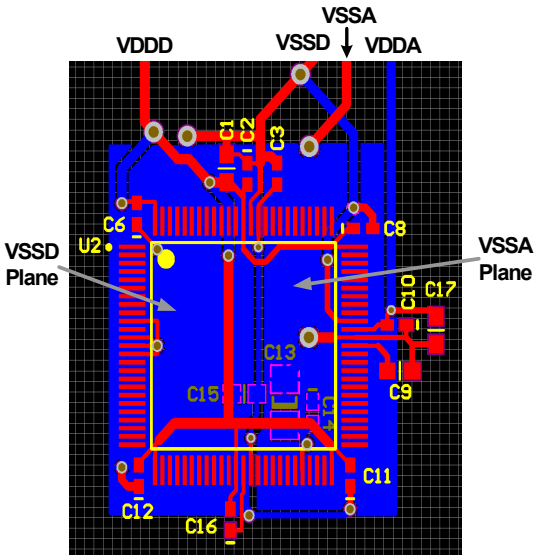

3. Pin Descriptions

IDAC0, IDAC1, IDAC2, IDAC3

Low resistance output pin for high current DACs (IDAC).

Opamp0OUT, Opamp1OUT, Opamp2OUT, Opamp3OUT

High current output of uncommitted opamp[10].

Extref0, Extref1

External reference input to the analog system.

Opamp0–, Opamp1–, Opamp2–, Opamp3–

Inverting input to uncommitted opamp.

Opamp0+, Opamp1+, Opamp2+, Opamp3+

Noninverting input to uncommitted opamp.

GPIO

General purpose I/O pin provides interfaces to the CPU, digital peripherals, analog peripherals, interrupts, LCD segment drive, and CapSense[10].

I2C0: SCL, I2C1: SCL

I^2C SCL line providing wake from sleep on an address match. Any I/O pin can be used for I^2C SCL if wake from sleep is not required.

I2C0: SDA, I2C1: SDA

I^2C SDA line providing wake from sleep on an address match. Any I/O pin can be used for I^2C SDA if wake from sleep is not required.

kHz XTAL: Xo, kHz XTAL: Xi

32.768-kHz crystal oscillator pin.

MHz XTAL: Xo, MHz XTAL: Xi

4- to 25-MHz crystal oscillator pin.

nTRST

Optional JTAG test reset programming and debug port connection to reset the JTAG connection.

SIO

Special I/O provides interfaces to the CPU, digital peripherals and interrupts with a programmable high threshold voltage, analog comparator, high sink current, and high impedance state when the device is unpowered.

SWDCK

Serial wire debug clock programming and debug port connection.

SWDIO

Serial wire debug input and output programming and debug port connection.

SWV

Single wire viewer debug output.

TCK

JTAG test clock programming and debug port connection.

TDI

JTAG test data in programming and debug port connection.

TDO

JTAG test data out programming and debug port connection.

TMS

JTAG test mode select programming and debug port connection.

Note
10. GPIOs with opamp outputs are not recommended for use with CapSense.

USBIO, D+

Provides D+ connection directly to a USB 2.0 bus. May be used as a digital I/O pin; it is powered from VDDD instead of from a VDDIO. Pins are Do Not Use (DNU) on devices without USB.

USBIO, D–

Provides D– connection directly to a USB 2.0 bus. May be used as a digital I/O pin; it is powered from VDDD instead of from a VDDIO. Pins are Do Not Use (DNU) on devices without USB.

VCCA.

Output of the analog core regulator or the input to the analog core. Requires a 1uF capacitor to VSSA. The regulator output is not designed to drive external circuits. **Note that if you use the device with an external core regulator (externally regulated mode), the voltage applied to this pin must not exceed the allowable range of 1.71 V to 1.89 V.** When using the internal core regulator, (internally regulated mode, the default), do not tie any power to this pin. For details see Power System on page 29.

VCCD.

Output of the digital core regulator or the input to the digital core. The two VCCD pins must be shorted together, with the trace between them as short as possible, and a 1uF capacitor to VSSD. The regulator output is not designed to drive external circuits. **Note that if you use the device with an external core regulator (externally regulated mode), the voltage applied to this pin must not exceed the allowable range of 1.71 V to 1.89 V.** When using the internal core regulator (internally regulated mode, the default), do not tie any power to this pin. For details see Power System on page 29.

VDDA

Supply for all analog peripherals and analog core regulator. VDDA must be the highest voltage present on the device. All other supply pins must be less than or equal to VDDA.

VDDD

Supply for all digital peripherals and digital core regulator. VDDD must be less than or equal to VDDA.

VSSA

Ground for all analog peripherals.

VSSD

Ground for all digital logic and I/O pins.

VDDIO0, VDDIO1, VDDIO2, VDDIO3

Supply for I/O pins. Each VDDIO must be tied to a valid operating voltage (1.71 V to 5.5 V), and must be less than or equal to VDDA.

$\overline{\text{XRES}}$ (and configurable $\overline{\text{XRES}}$)

External reset pin. Active low with internal pull-up. Pin P1[2] may be configured to be a XRES pin; see "Nonvolatile Latches (NVLs)" on page 22.

4. CPU

4.1 8051 CPU

The CY8C36 devices use a single cycle 8051 CPU, which is fully compatible with the original MCS-51 instruction set. The CY8C36 family uses a pipelined RISC architecture, which executes most instructions in 1 to 2 cycles to provide peak performance of up to 33 MIPS with an average of 2 cycles per instruction. The single cycle 8051 CPU runs ten times faster than a standard 8051 processor.

The 8051 CPU subsystem includes these features:

- Single cycle 8051 CPU
- Up to 64 KB of flash memory, up to 2 KB of EEPROM, and up to 8 KB of SRAM
- 512-byte instruction cache between CPU and flash
- Programmable nested vector interrupt controller
- DMA controller
- Peripheral HUB (PHUB)
- External memory interface (EMIF)

4.2 Addressing Modes

The following addressing modes are supported by the 8051:

- Direct Addressing: The operand is specified by a direct 8-bit address field. Only the internal RAM and the SFRs can be accessed using this mode.
- Indirect Addressing: The instruction specifies the register which contains the address of the operand. The registers R0 or R1 are used to specify the 8-bit address, while the data pointer (DPTR) register is used to specify the 16-bit address.
- Register Addressing: Certain instructions access one of the registers (R0 to R7) in the specified register bank. These instructions are more efficient because there is no need for an address field.
- Register Specific Instructions: Some instructions are specific to certain registers. For example, some instructions always act on the accumulator. In this case, there is no need to specify the operand.
- Immediate Constants: Some instructions carry the value of the constants directly instead of an address.
- Indexed Addressing: This type of addressing can be used only for a read of the program memory. This mode uses the Data Pointer as the base and the accumulator value as an offset to read a program memory.
- Bit Addressing: In this mode, the operand is one of 256 bits.

4.3 Instruction Set

The 8051 instruction set is highly optimized for 8-bit handling and Boolean operations. The types of instructions supported include:

- Arithmetic instructions
- Logical instructions
- Data transfer instructions
- Boolean instructions

■ Program branching instructions

4.3.1 Instruction Set Summary

4.3.1.1 Arithmetic Instructions

Arithmetic instructions support the direct, indirect, register, immediate constant, and register-specific instructions. Arithmetic modes are used for addition, subtraction, multiplication, division, increment, and decrement operations. Table 4-1 lists the different arithmetic instructions.

Table 4-1. Arithmetic Instructions

Mnemonic	Description	Bytes	Cycles
ADD A,Rn	Add register to accumulator	1	1
ADD A,Direct	Add direct byte to accumulator	2	2
ADD A,@Ri	Add indirect RAM to accumulator	1	2
ADD A,#data	Add immediate data to accumulator	2	2
ADDC A,Rn	Add register to accumulator with carry	1	1
ADDC A,Direct	Add direct byte to accumulator with carry	2	2
ADDC A,@Ri	Add indirect RAM to accumulator with carry	1	2
ADDC A,#data	Add immediate data to accumulator with carry	2	2
SUBB A,Rn	Subtract register from accumulator with borrow	1	1
SUBB A,Direct	Subtract direct byte from accumulator with borrow	2	2
SUBB A,@Ri	Subtract indirect RAM from accumulator with borrow	1	2
SUBB A,#data	Subtract immediate data from accumulator with borrow	2	2
INC A	Increment accumulator	1	1
INC Rn	Increment register	1	2
INC Direct	Increment direct byte	2	3
INC @Ri	Increment indirect RAM	1	3
DEC A	Decrement accumulator	1	1
DEC Rn	Decrement register	1	2
DEC Direct	Decrement direct byte	2	3
DEC @Ri	Decrement indirect RAM	1	3
INC DPTR	Increment data pointer	1	1
MUL	Multiply accumulator and B	1	2
DIV	Divide accumulator by B	1	6
DAA	Decimal adjust accumulator	1	3

4.3.1.2 Logical Instructions

The logical instructions perform Boolean operations such as AND, OR, XOR on bytes, rotate of accumulator contents, and swap of nibbles in an accumulator. The Boolean operations on the bytes are performed on the bit-by-bit basis. Table 4-2 shows the list of logical instructions and their description.

Table 4-2. Logical Instructions

Mnemonic	Description	Bytes	Cycles
ANL A,Rn	AND register to accumulator	1	1
ANL A,Direct	AND direct byte to accumulator	2	2
ANL A,@Ri	AND indirect RAM to accumulator	1	2
ANL A,#data	AND immediate data to accumulator	2	2
ANL Direct, A	AND accumulator to direct byte	2	3
ANL Direct, #data	AND immediate data to direct byte	3	3
ORL A,Rn	OR register to accumulator	1	1
ORL A,Direct	OR direct byte to accumulator	2	2
ORL A,@Ri	OR indirect RAM to accumulator	1	2
ORL A,#data	OR immediate data to accumulator	2	2
ORL Direct, A	OR accumulator to direct byte	2	3
ORL Direct, #data	OR immediate data to direct byte	3	3
XRL A,Rn	XOR register to accumulator	1	1
XRL A,Direct	XOR direct byte to accumulator	2	2
XRL A,@Ri	XOR indirect RAM to accumulator	1	2
XRL A,#data	XOR immediate data to accumulator	2	2
XRL Direct, A	XOR accumulator to direct byte	2	3
XRL Direct, #data	XOR immediate data to direct byte	3	3
CLR A	Clear accumulator	1	1
CPL A	Complement accumulator	1	1
RL A	Rotate accumulator left	1	1
RLC A	Rotate accumulator left through carry	1	1
RR A	Rotate accumulator right	1	1
RRC A	Rotate accumulator right though carry	1	1
SWAP A	Swap nibbles within accumulator	1	1

4.3.1.3 Data Transfer Instructions

The data transfer instructions are of three types: the core RAM, xdata RAM, and the lookup tables. The core RAM transfer includes transfer between any two core RAM locations or SFRs. These instructions can use direct, indirect, register, and immediate addressing. The xdata RAM transfer includes only the transfer between the accumulator and the xdata RAM location. It can use only indirect addressing. The lookup tables involve nothing but the read of program memory using the Indexed addressing mode. Table 4-3 lists the various data transfer instructions available.

4.3.1.4 Boolean Instructions

The 8051 core has a separate bit-addressable memory location. It has 128 bits of bit addressable RAM and a set of SFRs that are bit addressable. The instruction set includes the whole menu of bit operations such as move, set, clear, toggle, OR, and AND instructions and the conditional jump instructions. Table 4-4 lists the available Boolean instructions.

Table 4-3. Data Transfer Instructions

Mnemonic	Description	Bytes	Cycles
MOV A,Rn	Move register to accumulator	1	1
MOV A,Direct	Move direct byte to accumulator	2	2
MOV A,@Ri	Move indirect RAM to accumulator	1	2
MOV A,#data	Move immediate data to accumulator	2	2
MOV Rn,A	Move accumulator to register	1	1
MOV Rn,Direct	Move direct byte to register	2	3
MOV Rn, #data	Move immediate data to register	2	2
MOV Direct, A	Move accumulator to direct byte	2	2
MOV Direct, Rn	Move register to direct byte	2	2
MOV Direct, Direct	Move direct byte to direct byte	3	3
MOV Direct, @Ri	Move indirect RAM to direct byte	2	3
MOV Direct, #data	Move immediate data to direct byte	3	3
MOV @Ri, A	Move accumulator to indirect RAM	1	2
MOV @Ri, Direct	Move direct byte to indirect RAM	2	3
MOV @Ri, #data	Move immediate data to indirect RAM	2	2
MOV DPTR, #data16	Load data pointer with 16 bit constant	3	3
MOVC A, @A+DPTR	Move code byte relative to DPTR to accumulator	1	5
MOVC A, @A + PC	Move code byte relative to PC to accumulator	1	4
MOVX A,@Ri	Move external RAM (8-bit) to accumulator	1	4
MOVX A, @DPTR	Move external RAM (16-bit) to accumulator	1	3
MOVX @Ri, A	Move accumulator to external RAM (8-bit)	1	5
MOVX @DPTR, A	Move accumulator to external RAM (16-bit)	1	4
PUSH Direct	Push direct byte onto stack	2	3
POP Direct	Pop direct byte from stack	2	2
XCH A, Rn	Exchange register with accumulator	1	2
XCH A, Direct	Exchange direct byte with accumulator	2	3
XCH A, @Ri	Exchange indirect RAM with accumulator	1	3
XCHD A, @Ri	Exchange low order indirect digit RAM with accumulator	1	3

Table 4-4. Boolean Instructions

Mnemonic	Description	Bytes	Cycles
CLR C	Clear carry	1	1
CLR bit	Clear direct bit	2	3
SETB C	Set carry	1	1
SETB bit	Set direct bit	2	3
CPL C	Complement carry	1	1
CPL bit	Complement direct bit	2	3
ANL C, bit	AND direct bit to carry	2	2

Table 4-4. Boolean Instructions *(continued)*

Mnemonic	Description	Bytes	Cycles
ANL C, /bit	AND complement of direct bit to carry	2	2
ORL C, bit	OR direct bit to carry	2	2
ORL C, /bit	OR complement of direct bit to carry	2	2
MOV C, bit	Move direct bit to carry	2	2
MOV bit, C	Move carry to direct bit	2	3
JC rel	Jump if carry is set	2	3
JNC rel	Jump if no carry is set	2	3
JB bit, rel	Jump if direct bit is set	3	5
JNB bit, rel	Jump if direct bit is not set	3	5
JBC bit, rel	Jump if direct bit is set and clear bit	3	5

4.3.1.5 Program Branching Instructions

The 8051 supports a set of conditional and unconditional jump instructions that help to modify the program execution flow. Table 4-5 shows the list of jump instructions.

Table 4-5. Jump Instructions

Mnemonic	Description	Bytes	Cycles
ACALL addr11	Absolute subroutine call	2	4
LCALL addr16	Long subroutine call	3	4
RET	Return from subroutine	1	4
RETI	Return from interrupt	1	4
AJMP addr11	Absolute jump	2	3
LJMP addr16	Long jump	3	4
SJMP rel	Short jump (relative address)	2	3
JMP @A + DPTR	Jump indirect relative to DPTR	1	5
JZ rel	Jump if accumulator is zero	2	4
JNZ rel	Jump if accumulator is nonzero	2	4
CJNE A,Direct, rel	Compare direct byte to accumulator and jump if not equal	3	5
CJNE A, #data, rel	Compare immediate data to accumulator and jump if not equal	3	4
CJNE Rn, #data, rel	Compare immediate data to register and jump if not equal	3	4
CJNE @Ri, #data, rel	Compare immediate data to indirect RAM and jump if not equal	3	5
DJNZ Rn,rel	Decrement register and jump if not zero	2	4
DJNZ Direct, rel	Decrement direct byte and jump if not zero	3	5
NOP	No operation	1	1

4.4 DMA and PHUB

The PHUB and the DMA controller are responsible for data transfer between the CPU and peripherals, and also data transfers between peripherals. The PHUB and DMA also control device configuration during boot. The PHUB consists of:

- A central hub that includes the DMA controller, arbiter, and router
- Multiple spokes that radiate outward from the hub to most peripherals

There are two PHUB masters: the CPU and the DMA controller. Both masters may initiate transactions on the bus. The DMA channels can handle peripheral communication without CPU intervention. The arbiter in the central hub determines which DMA channel is the highest priority if there are multiple requests.

4.4.1 PHUB Features

- CPU and DMA controller are both bus masters to the PHUB
- Eight multi-layer AHB bus parallel access paths (spokes) for peripheral access
- Simultaneous CPU and DMA access to peripherals located on different spokes
- Simultaneous DMA source and destination burst transactions on different spokes
- Supports 8-, 16-, 24-, and 32-bit addressing and data

Table 4-6. PHUB Spokes and Peripherals

PHUB Spokes	Peripherals
0	SRAM
1	IOs, PICU, EMIF
2	PHUB local configuration, Power manager, Clocks, IC, SWV, EEPROM, Flash programming interface
3	Analog interface and trim, Decimator
4	USB, CAN, I^2C, Timers, Counters, and PWMs
5	DFB
6	UDBs group 1
7	UDBs group 2

4.4.2 DMA Features

- 24 DMA channels
- Each channel has one or more transaction descriptors (TD) to configure channel behavior. Up to 128 total TDs can be defined
- TDs can be dynamically updated
- Eight levels of priority per channel
- Any digitally routable signal, the CPU, or another DMA channel, can trigger a transaction
- Each channel can generate up to two interrupts per transfer
- Transactions can be stalled or canceled
- Supports transaction size of infinite or 1 to 64 KB
- TDs may be nested and/or chained for complex transactions

4.4.3 Priority Levels

The CPU always has higher priority than the DMA controller when their accesses require the same bus resources. Due to the system architecture, the CPU can never starve the DMA. DMA channels of higher priority (lower priority number) may interrupt current DMA transfers. In the case of an interrupt, the current transfer is allowed to complete its current transaction. To ensure latency limits when multiple DMA accesses are requested simultaneously, a fairness algorithm guarantees an interleaved minimum percentage of bus bandwidth for priority levels 2 through 7. Priority levels 0 and 1 do not take part in the fairness algorithm and may use 100 percent of the bus bandwidth. If a tie occurs on two DMA requests of the same priority level, a simple round robin method is used to evenly share the allocated bandwidth. The round robin allocation can be disabled for each DMA channel, allowing it to always be at the head of the line.

Priority levels 2 to 7 are guaranteed the minimum bus bandwidth shown in Table 4-7 after the CPU and DMA priority levels 0 and 1 have satisfied their requirements.

Table 4-7. Priority Levels

Priority Level	% Bus Bandwidth
0	100.0
1	100.0
2	50.0
3	25.0
4	12.5
5	6.2
6	3.1
7	1.5

When the fairness algorithm is disabled, DMA access is granted based solely on the priority level; no bus bandwidth guarantees are made.

4.4.4 Transaction Modes Supported

The flexible configuration of each DMA channel and the ability to chain multiple channels allow the creation of both simple and complex use cases. General use cases include, but are not limited to:

4.4.4.1 Simple DMA

In a simple DMA case, a single TD transfers data between a source and sink (peripherals or memory location). The basic timing diagrams of DMA read and write cycles are shown in Figure 4-1. For more description on other transfer modes, refer to the Technical Reference Manual.

Figure 4-1. DMA Timing Diagram

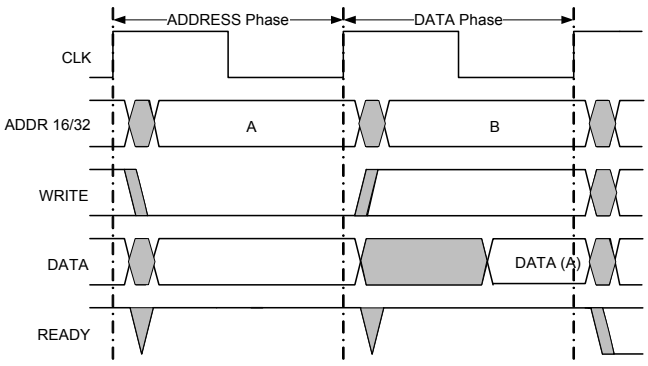

Basic DMA Read Transfer without wait states

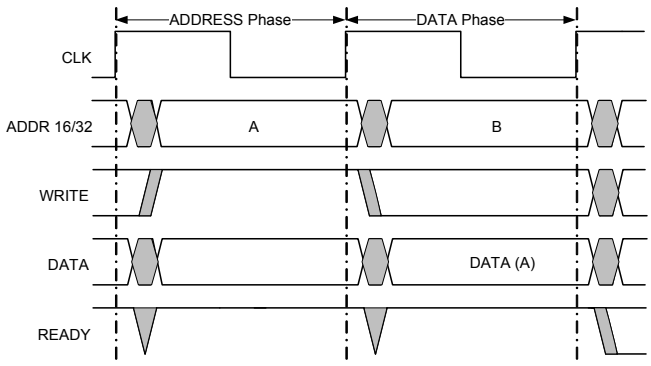

Basic DMA Write Transfer without wait states

4.4.4.2 Auto Repeat DMA

Auto repeat DMA is typically used when a static pattern is repetitively read from system memory and written to a peripheral. This is done with a single TD that chains to itself.

4.4.4.3 Ping Pong DMA

A ping pong DMA case uses double buffering to allow one buffer to be filled by one client while another client is consuming the data previously received in the other buffer. In its simplest form, this is done by chaining two TDs together so that each TD calls the opposite TD when complete.

4.4.4.4 Circular DMA

Circular DMA is similar to ping pong DMA except it contains more than two buffers. In this case there are multiple TDs; after the last TD is complete it chains back to the first TD.

4.4.4.5 Scatter Gather DMA

In the case of scatter gather DMA, there are multiple noncontiguous sources or destinations that are required to effectively carry out an overall DMA transaction. For example, a packet may need to be transmitted off of the device and the packet elements, including the header, payload, and trailer, exist in various noncontiguous locations in memory. Scatter gather DMA allows the segments to be concatenated together by using multiple TDs in a chain. The chain gathers the data from the multiple locations. A similar concept applies for the reception of data onto the device. Certain parts of the received data may need to be scattered to various locations in memory for software processing convenience. Each TD in the chain specifies the location for each discrete element in the chain.

4.4.4.6 Packet Queuing DMA

Packet queuing DMA is similar to scatter gather DMA but specifically refers to packet protocols. With these protocols, there may be separate configuration, data, and status phases associated with sending or receiving a packet.

For instance, to transmit a packet, a memory mapped configuration register can be written inside a peripheral, specifying the overall length of the ensuing data phase. The CPU can set up this configuration information anywhere in system memory and copy it with a simple TD to the peripheral. After the configuration phase, a data phase TD (or a series of data phase TDs) can begin (potentially using scatter gather). When the data phase TD(s) finish, a status phase TD can be invoked that reads some memory mapped status information from the peripheral and copies it to a location in system memory specified by the CPU for later inspection. Multiple sets of configuration, data, and status phase ‘subchains’ can be strung together to create larger chains that transmit multiple packets in this way. A similar concept exists in the opposite direction to receive the packets.

4.4.4.7 Nested DMA

One TD may modify another TD, as the TD configuration space is memory mapped similar to any other peripheral. For example, a first TD loads a second TD’s configuration and then calls the second TD. The second TD moves data as required by the application. When complete, the second TD calls the first TD, which again updates the second TD’s configuration. This process repeats as often as necessary.

4.5 Interrupt Controller

The interrupt controller provides a mechanism for hardware resources to change program execution to a new address, independent of the current task being executed by the main code. The interrupt controller provides enhanced features not found on original 8051 interrupt controllers:

- Thirty-two interrupt vectors
- Jumps directly to ISR anywhere in code space with dynamic vector addresses
- Multiple sources for each vector
- Flexible interrupt to vector matching
- Each interrupt vector is independently enabled or disabled
- Each interrupt can be dynamically assigned one of eight priorities
- Eight level nestable interrupts
- Multiple I/O interrupt vectors
- Software can send interrupts
- Software can clear pending interrupts

Figure 4-2 on page 18 represents typical flow of events when an interrupt triggered. Figure 4-3 on page 19 shows the interrupt structure and priority polling.

Figure 4-2. Interrupt Processing Timing Diagram

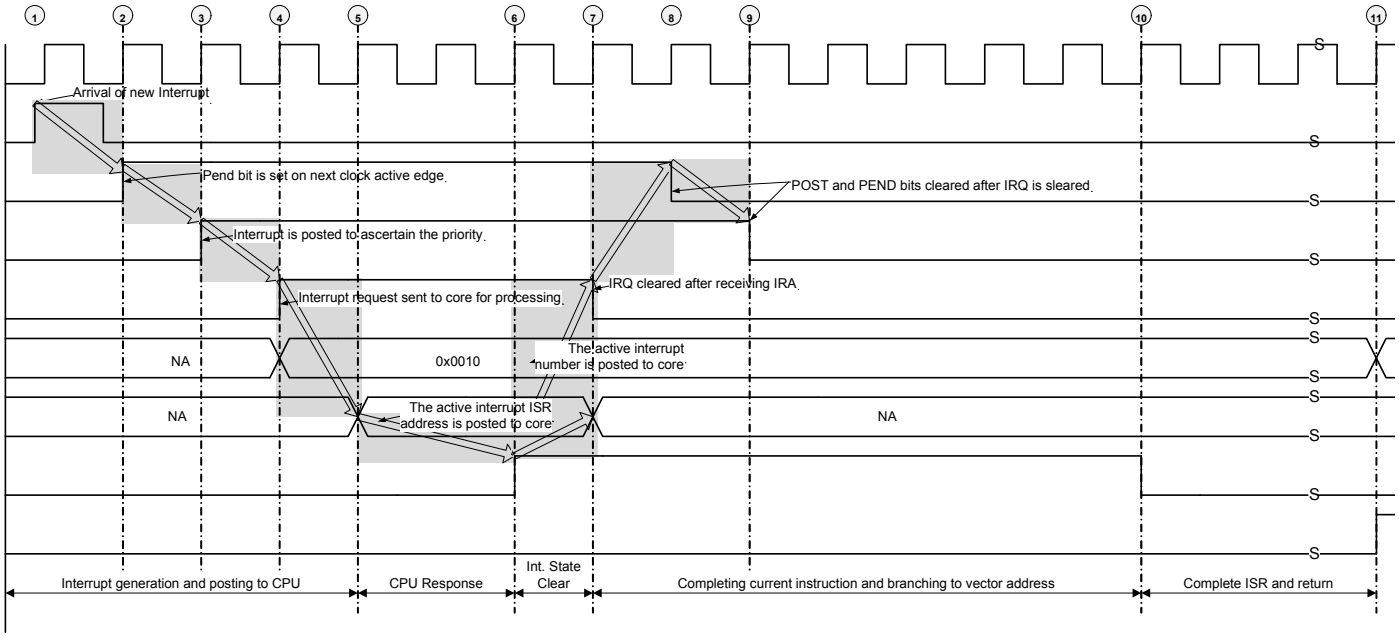

Notes

- 1: Interrupt triggered asynchronous to the clock
- 2: The PEND bit is set on next active clock edge to indicate the interrupt arrival
- 3: POST bit is set following the PEND bit
- 4: Interrupt request and the interrupt number sent to CPU core after evaluation priority (Takes 3 clocks)
- 5: ISR address is posted to CPU core for branching
- 6: CPU acknowledges the interrupt request
- 7: ISR address is read by CPU for branching
- 8, 9: PEND and POST bits are cleared respectively after receiving the IRA from core
- 10: IRA bit is cleared after completing the current instruction and starting the instruction execution from ISR location (Takes 7 cycles)
- 11: IRC is set to indicate the completion of ISR, Active int. status is restored with previous status

The total interrupt latency (ISR execution)

= POST + PEND + IRQ + IRA + Completing current instruction and branching

= 1+1+1+2+7 cycles

= 12 cycles

Figure 4-3. Interrupt Structure

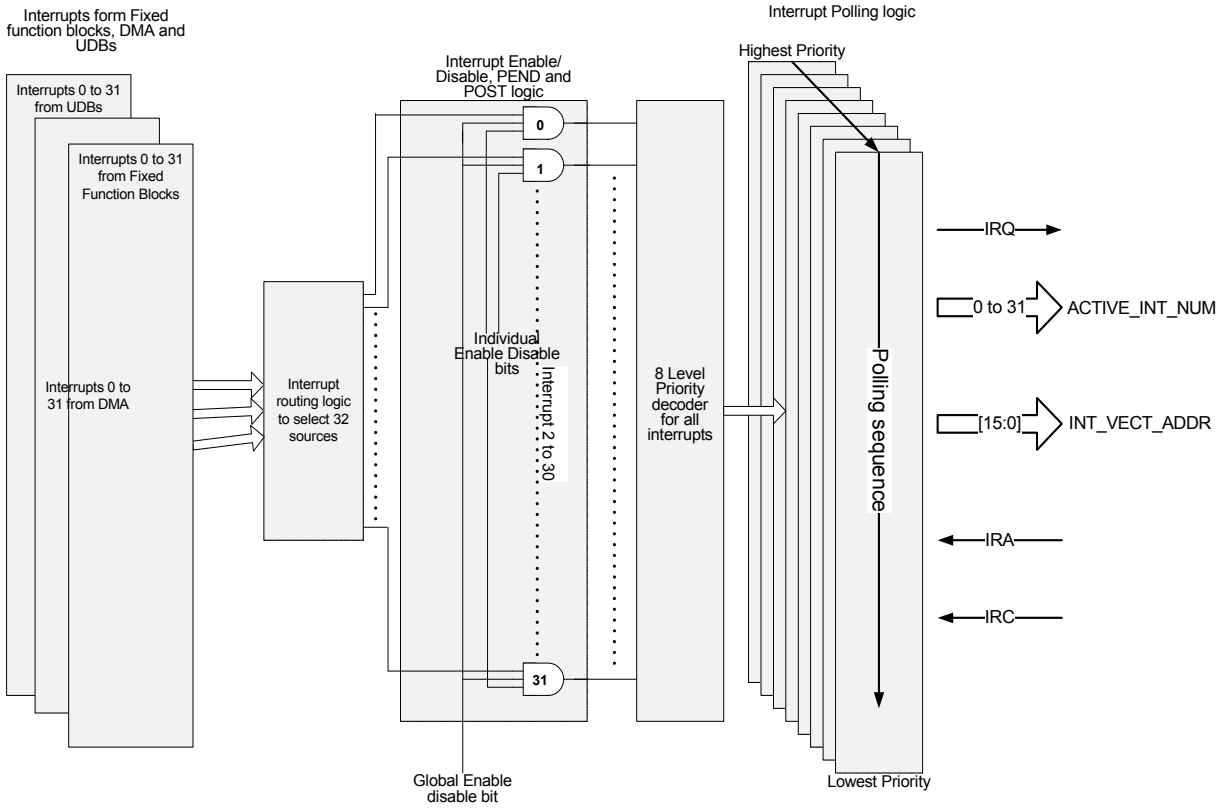

When an interrupt is pending, the current instruction is completed and the program counter is pushed onto the stack. Code execution then jumps to the program address provided by the vector. After the ISR is completed, a RETI instruction is executed and returns execution to the instruction following the previously interrupted instruction. To do this the RETI instruction pops the program counter from the stack.

If the same priority level is assigned to two or more interrupts, the interrupt with the lower vector number is executed first. Each interrupt vector may choose from three interrupt sources: Fixed Function, DMA, and UDB. The fixed function interrupts are direct connections to the most common interrupt sources and provide the lowest resource cost connection. The DMA interrupt sources provide direct connections to the two DMA interrupt sources provided per DMA channel. The third interrupt source for vectors is from the UDB digital routing array. This allows any digital signal available to the UDB array to be used as an interrupt source. Fixed function interrupts and all interrupt sources may be routed to any interrupt vector using the UDB interrupt source connections.

Table 4-8. Interrupt Vector Table

#	Fixed Function	DMA	UDB
0	LVD	phub_termout0[0]	udb_intr[0]
1	Cache/ECC	phub_termout0[1]	udb_intr[1]
2	Reserved	phub_termout0[2]	udb_intr[2]
3	Sleep (Pwr Mgr)	phub_termout0[3]	udb_intr[3]
4	PICU[0]	phub_termout0[4]	udb_intr[4]
5	PICU[1]	phub_termout0[5]	udb_intr[5]
6	PICU[2]	phub_termout0[6]	udb_intr[6]
7	PICU[3]	phub_termout0[7]	udb_intr[7]
8	PICU[4]	phub_termout0[8]	udb_intr[8]
9	PICU[5]	phub_termout0[9]	udb_intr[9]
10	PICU[6]	phub_termout0[10]	udb_intr[10]
11	PICU[12]	phub_termout0[11]	udb_intr[11]
12	PICU[15]	phub_termout0[12]	udb_intr[12]
13	Comparators Combined	phub_termout0[13]	udb_intr[13]
14	Switched Caps Combined	phub_termout0[14]	udb_intr[14]
15	I^2C	phub_termout0[15]	udb_intr[15]
16	CAN	phub_termout1[0]	udb_intr[16]
17	Timer/Counter0	phub_termout1[1]	udb_intr[17]
18	Timer/Counter1	phub_termout1[2]	udb_intr[18]
19	Timer/Counter2	phub_termout1[3]	udb_intr[19]
20	Timer/Counter3	phub_termout1[4]	udb_intr[20]
21	USB SOF Int	phub_termout1[5]	udb_intr[21]
22	USB Arb Int	phub_termout1[6]	udb_intr[22]
23	USB Bus Int	phub_termout1[7]	udb_intr[23]
24	USB Endpoint[0]	phub_termout1[8]	udb_intr[24]
25	USB Endpoint Data	phub_termout1[9]	udb_intr[25]
26	Reserved	phub_termout1[10]	udb_intr[26]
27	LCD	phub_termout1[11]	udb_intr[27]
28	DFB Int	phub_termout1[12]	udb_intr[28]
29	Decimator Int	phub_termout1[13]	udb_intr[29]
30	PHUB Error Int	phub_termout1[14]	udb_intr[30]
31	EEPROM Fault Int	phub_termout1[15]	udb_intr[31]

5. Memory

5.1 Static RAM

CY8C36 SRAM is used for temporary data storage. Up to 8 KB of SRAM is provided and can be accessed by the 8051 or the DMA controller. See Memory Map on page 24. Simultaneous access of SRAM by the 8051 and the DMA controller is possible if different 4-KB blocks are accessed.

5.2 Flash Program Memory

Flash memory in PSoC devices provides nonvolatile storage for user firmware, user configuration data, bulk data storage, and optional ECC data. The main flash memory area contains up to 64 KB of user program space.

Up to an additional 8 KB of flash space is available for ECC. If ECC is not used this space can store device configuration data and bulk user data. User code may not be run out of the ECC flash memory section. ECC can correct one bit error and detect two bit errors per 8 bytes of firmware memory; an interrupt can be generated when an error is detected.

The CPU reads instructions located in flash through a cache controller. This improves instruction execution rate and reduces system power consumption by requiring less frequent flash access. The cache has 8 lines at 64 bytes per line for a total of 512 bytes. It is fully associative, automatically controls flash power, and can be enabled or disabled. If ECC is enabled, the cache controller also performs error checking and correction, and interrupt generation.

Flash programming is performed through a special interface and preempts code execution out of flash. The flash programming interface performs flash erasing, programming and setting code protection levels. Flash in-system serial programming (ISSP), typically used for production programming, is possible through both the SWD and JTAG interfaces. In-system programming, typically used for bootloaders, is also possible using serial interfaces such as I^2C, USB, UART, and SPI, or any communications protocol.

5.3 Flash Security

All PSoC devices include a flexible flash-protection model that prevents access and visibility to on-chip flash memory. This prevents duplication or reverse engineering of proprietary code. Flash memory is organized in blocks, where each block contains 256 bytes of program or data and 32 bytes of ECC or configuration data. A total of up to 256 blocks is provided on 64-KB flash devices.

The device offers the ability to assign one of four protection levels to each row of flash. Table 5-1 lists the protection modes available. Flash protection levels can only be changed by performing a complete flash erase. The Full Protection and Field Upgrade settings disable external access (through a debugging tool such as PSoC Creator, for example). If your application requires code update through a bootloader, then use the Field Upgrade setting. Use the Unprotected setting only when no security is needed in your application. The PSoC device also offers an advanced security feature called Device Security which permanently disables all test, programming, and debug ports, protecting your application from external access (see the "Device Security" section on page 63). For more information about how to take full advantage of the security features in PSoC, see the PSoC 3 TRM.

Table 5-1. Flash Protection

Protection Setting	Allowed	Not Allowed
Unprotected	External read and write + internal read and write	–
Factory Upgrade	External write + internal read and write	External read
Field Upgrade	Internal read and write	External read and write
Full Protection	Internal read	External read and write + internal write

Disclaimer

Note the following details of the flash code protection features on Cypress devices.

Cypress products meet the specifications contained in their particular Cypress data sheets. Cypress believes that its family of products is one of the most secure families of its kind on the market today, regardless of how they are used. There may be methods, unknown to Cypress, that can breach the code protection features. Any of these methods, to our knowledge, would be dishonest and possibly illegal. Neither Cypress nor any other semiconductor manufacturer can guarantee the security of their code. Code protection does not mean that we are guaranteeing the product as 'unbreakable'. Cypress is willing to work with the customer who is concerned about the integrity of their code. Code protection is constantly evolving. We at Cypress are committed to continuously improving the code protection features of our products.

5.4 EEPROM

PSoC EEPROM memory is a byte-addressable nonvolatile memory. The CY8C36 has up to 2 KB of EEPROM memory to store user data. Reads from EEPROM are random access at the byte level. Reads are done directly; writes are done by sending write commands to an EEPROM programming interface. CPU code execution can continue from flash during EEPROM writes. EEPROM is erasable and writeable at the row level. The EEPROM is divided into 128 rows of 16 bytes each. The CPU can not execute out of EEPROM. There is no ECC hardware associated with EEPROM. If ECC is required it must be handled in firmware.

It can take as much as 20 milliseconds to write to EEPROM or flash. During this time the device should not be reset, or unexpected changes may be made to portions of EEPROM or flash. Reset sources (see Section 6.3.1) include XRES pin, software reset, and watchdog; care should be taken to make sure that these are not inadvertently activated. Also, the low voltage detect circuits should be configured to generate an interrupt instead of a reset.

5.5 Nonvolatile Latches (NVLs)

PSoC has a 4-byte array of nonvolatile latches (NVLs) that are used to configure the device at reset. The NVL register map is shown in Table 5-2.

Table 5-2. Device Configuration NVL Register Map

Register Address	7	6	5	4	3	2	1	0
0x00	PRT3RDM[1:0]		PRT2RDM[1:0]		PRT1RDM[1:0]		PRT0RDM[1:0]	
0x01	PRT12RDM[1:0]		PRT6RDM[1:0]		PRT5RDM[1:0]		PRT4RDM[1:0]	
0x02	XRESMEN	DBGEN					PRT15RDM[1:0]	
0x03	DIG_PHS_DLY[3:0]				ECCEN	DPS[1:0]		CFGSPEED

The details for individual fields and their factory default settings are shown in Table 5-3:.

Table 5-3. Fields and Factory Default Settings

Field	Description	Settings
PRTxRDM[1:0]	Controls reset drive mode of the corresponding IO port. See "Reset Configuration" on page 39. All pins of the port are set to the same mode.	00b (default) - high impedance analog 01b - high impedance digital 10b - resistive pull up 11b - resistive pull down
XRESMEN	Controls whether pin P1[2] is used as a GPIO or as an external reset. See "Pin Descriptions" on page 9, XRES description.	0 (default for 68-pin and 100-pin parts) - GPIO 1 (default for 48-pin parts) - external reset
DBGEN	Debug Enable allows access to the debug system, for third-party programmers.	0 - access disabled 1 (default) - access enabled
DPS{1:0]	Controls the usage of various P1 pins as a debug port. See "Programming, Debug Interfaces, Resources" on page 60.	00b - 5-wire JTAG 01b (default) - 4-wire JTAG 10b - SWD 11b - debug ports disabled
ECCEN	Controls whether ECC flash is used for ECC or for general configuration and data storage. See "Flash Program Memory" on page 21.	0 - ECC disabled 1 (default) - ECC enabled
DIG_PHS_DLY[3:0]	Selects the digital clock phase delay.	See the TRM for details.

Although PSoC Creator provides support for modifying the device configuration NVLs, the number of NVL erase / write cycles is limited – see Nonvolatile Latches (NVL) on page 120.

5.6 External Memory Interface

CY8C36 provides an EMIF for connecting to external memory devices. The connection allows read and write accesses to external memories. The EMIF operates in conjunction with UDBs, I/O ports, and other hardware to generate external memory address and control signals. At 33 MHz, each memory access cycle takes four bus clock cycles. Figure 5-1 is the EMIF block diagram. The EMIF supports synchronous and asynchronous memories. The CY8C36 supports only one type of external memory device at a time. External memory can be accessed through the 8051 xdata space; up to 24 address bits can be used. See "xdata Space" section on page 25. The memory can be 8 or 16 bits wide.

Figure 5-1. EMIF Block Diagram

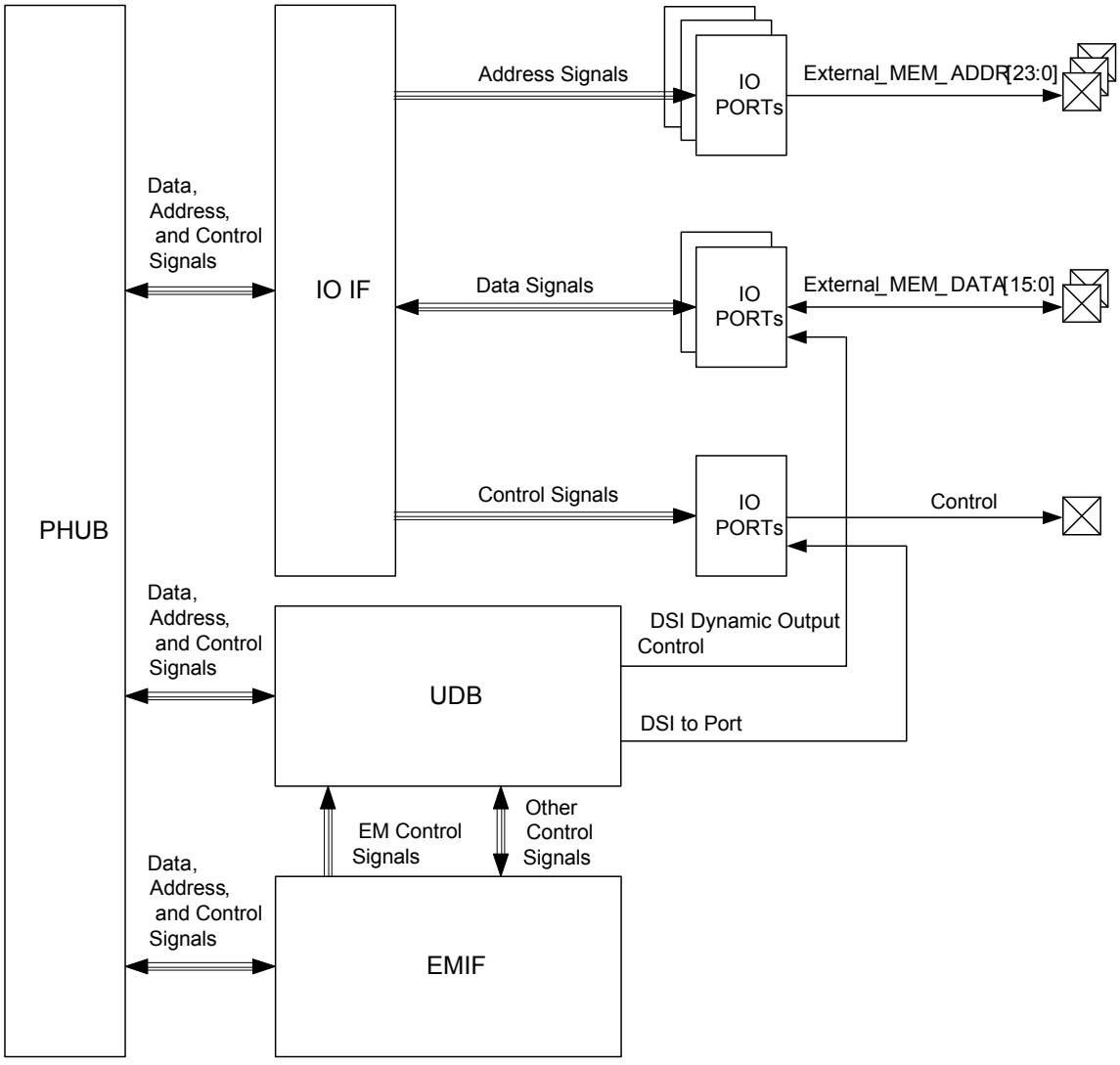

5.7 Memory Map

The CY8C36 8051 memory map is very similar to the MCS-51 memory map.

5.7.1 Code Space

The CY8C36 8051 code space is 64 KB. Only main flash exists in this space. See the Flash Program Memory on page 21.

5.7.2 Internal Data Space

The CY8C36 8051 internal data space is 384 bytes, compressed within a 256-byte space. This space consists of 256 bytes of RAM (in addition to the SRAM mentioned in Static RAM on page 21) and a 128-byte space for special function registers (SFR). See Figure 5-2. The lowest 32 bytes are used for 4 banks of registers R0-R7. The next 16 bytes are bit-addressable.

Figure 5-2. 8051 Internal Data Space

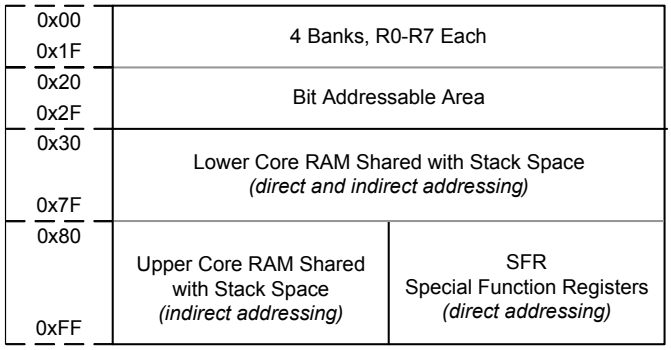

In addition to the register or bit address modes used with the lower 48 bytes, the lower 128 bytes can be accessed with direct or indirect addressing. With direct addressing mode, the upper 128 bytes map to the SFRs. With indirect addressing mode, the upper 128 bytes map to RAM. Stack operations use indirect addressing; the 8051 stack space is 256 bytes. See the "Addressing Modes" section on page 10.

5.7.3 SFRs

The SFR space provides access to frequently accessed registers. The memory map for the SFR memory space is shown in Table 5-4.

Table 5-4. SFR Map

Address	0/8	1/9	2/A	3/B	4/C	5/D	6/E	7/F
0×F8	SFRPRT15DR	SFRPRT15PS	SFRPRT15SEL	–	–	–	–	–
0×F0	B	–	SFRPRT12SEL	–	–	–	–	–
0×E8	SFRPRT12DR	SFRPRT12PS	MXAX	–	–	–	–	–
0×E0	ACC	–	–	–	–	–	–	–
0×D8	SFRPRT6DR	SFRPRT6PS	SFRPRT6SEL	–	–	–	–	–
0×D0	PSW	–	–	–	–	–	–	–
0×C8	SFRPRT5DR	SFRPRT5PS	SFRPRT5SEL	–	–	–	–	–
0×C0	SFRPRT4DR	SFRPRT4PS	SFRPRT4SEL	–	–	–	–	–
0×B8				–	–	–	–	–
0×B0	SFRPRT3DR	SFRPRT3PS	SFRPRT3SEL	–	–	–	–	–
0×A8	IE	–	–	–	–	–	–	–
0×A0	P2AX	–	SFRPRT1SEL	–	–	–	–	–
0×98	SFRPRT2DR	SFRPRT2PS	SFRPRT2SEL	–	–	–	–	–
0×90	SFRPRT1DR	SFRPRT1PS	–	DPX0	–	DPX1	–	–
0×88	–	SFRPRT0PS	SFRPRT0SEL	–	–	–	–	–
0×80	SFRPRT0DR	SP	DPL0	DPH0	DPL1	DPH1	DPS	–

The CY8C36 family provides the standard set of registers found on industry standard 8051 devices. In addition, the CY8C36 devices add SFRs to provide direct access to the I/O ports on the device. The following sections describe the SFRs added to the CY8C36 family.

5.7.4 XData Space Access SFRs

The 8051 core features dual DPTR registers for faster data transfer operations. The data pointer select SFR, DPS, selects which data pointer register, DPTR0 or DPTR1, is used for the following instructions:

- MOVX @DPTR, A
- MOVX A, @DPTR
- MOVC A, @A+DPTR
- JMP @A+DPTR
- INC DPTR
- MOV DPTR, #data16

The extended data pointer SFRs, DPX0, DPX1, MXAX, and P2AX, hold the most significant parts of memory addresses during access to the xdata space. These SFRs are used only with the MOVX instructions.

During a MOVX instruction using the DPTR0/DPTR1 register, the most significant byte of the address is always equal to the contents of DPX0/DPX1.

During a MOVX instruction using the R0 or R1 register, the most significant byte of the address is always equal to the contents of MXAX, and the next most significant byte is always equal to the contents of P2AX.

5.7.5 I/O Port SFRs

The I/O ports provide digital input sensing, output drive, pin interrupts, connectivity for analog inputs and outputs, LCD, and access to peripherals through the DSI. Full information on I/O ports is found in I/O System and Routing on page 33.

I/O ports are linked to the CPU through the PHUB and are also available in the SFRs. Using the SFRs allows faster access to a limited set of I/O port registers, while using the PHUB allows boot configuration and access to all I/O port registers.

Each SFR supported I/O port provides three SFRs:

- SFRPRTxDR sets the output data state of the port (where × is port number and includes ports 0–6, 12 and 15).
- The SFRPRTxSEL selects whether the PHUB PRTxDR register or the SFRPRTxDR controls each pin's output buffer within the port. If a SFRPRTxSEL[y] bit is high, the corresponding SFRPRTxDR[y] bit sets the output state for that pin. If a SFRPRTxSEL[y] bit is low, the corresponding PRTxDR[y] bit sets the output state of the pin (where y varies from 0 to 7).
- The SFRPRTxPS is a read only register that contains pin state values of the port pins.

5.7.5.1 xdata Space

The 8051 xdata space is 24-bit, or 16 MB in size. The majority of this space is not 'external'—it is used by on-chip components. See Table 5-5. External, that is, off-chip, memory can be accessed using the EMIF. See External Memory Interface on page 23.

Table 5-5. XDATA Data Address Map

Address Range	Purpose
0×00 0000 – 0×00 1FFF	SRAM
0×00 4000 – 0×00 42FF	Clocking, PLLs, and oscillators
0×00 4300 – 0×00 43FF	Power management
0×00 4400 – 0×00 44FF	Interrupt controller
0×00 4500 – 0×00 45FF	Ports interrupt control
0×00 4700 – 0×00 47FF	Flash programming interface
0×00 4800 - 0×00 48FF	Cache controller
0×00 4900 – 0×00 49FF	I^2C controller
0×00 4E00 – 0×00 4EFF	Decimator
0×00 4F00 – 0×00 4FFF	Fixed timer/counter/PWMs
0×00 5000 – 0×00 51FF	I/O ports control
0×00 5400 – 0×00 54FF	EMIF control registers
0×00 5800 – 0×00 5FFF	Analog subsystem interface
0×00 6000 – 0×00 60FF	USB controller
0×00 6400 – 0×00 6FFF	UDB Working Registers
0×00 7000 – 0×00 7FFF	PHUB configuration
0×00 8000 – 0×00 8FFF	EEPROM
0×00 A000 – 0×00 A400	CAN
0×00 C000 – 0×00 C800	DFB
0×01 0000 – 0×01 FFFF	Digital Interconnect configuration
0×05 0220 – 0×05 02F0	Debug controller
0×08 0000 – 0×08 1FFF	Flash ECC bytes
0×80 0000 – 0×FF FFFF	External memory interface

6. System Integration

6.1 Clocking System

The clocking system generates, divides, and distributes clocks throughout the PSoC system. For the majority of systems, no external crystal is required. The IMO and PLL together can generate up to a 66 MHz clock, accurate to ±1 percent over voltage and temperature. Additional internal and external clock sources allow each design to optimize accuracy, power, and cost. Any of the clock sources can be used to generate other clock frequencies in the 16-bit clock dividers and UDBs for anything the user wants, for example a UART baud rate generator.

Clock generation and distribution is automatically configured through the PSoC Creator IDE graphical interface. This is based on the complete system's requirements. It greatly speeds the design process. PSoC Creator allows you to build clocking systems with minimal input. You can specify desired clock frequencies and accuracies, and the software locates or builds a clock that meets the required specifications. This is possible because of the programmability inherent in PSoC.

Key features of the clocking system include:

- Seven general purpose clock sources
  - 3- to 62-MHz IMO, ±1% at 3 MHz
  - 4- to 25-MHz external crystal oscillator (MHzECO)
  - Clock doubler provides a doubled clock frequency output for the USB block, see USB Clock Domain on page 28.
  - DSI signal from an external I/O pin or other logic
  - 24- to 67-MHz fractional PLL sourced from IMO, MHzECO, or DSI
  - 1-kHz, 33-kHz, 100-kHz ILO for WDT and sleep timer
  - 32.768-kHz external crystal oscillator (kHzECO) for RTC
- IMO has a USB mode that auto locks to the USB bus clock requiring no external crystal for USB (USB equipped parts only)
- Independently sourced clock in all clock dividers
- Eight 16-bit clock dividers for the digital system
- Four 16-bit clock dividers for the analog system
- Dedicated 16-bit divider for the bus clock
- Dedicated 4-bit divider for the CPU clock
- Automatic clock configuration in PSoC Creator

Table 6-1. Oscillator Summary

Source	Fmin	Tolerance at Fmin	Fmax	Tolerance at Fmax	Startup Time
IMO	3 MHz	±1% over voltage and temperature	62 MHz	±7%	13 µs max
MHzECO	4 MHz	Crystal dependent	25 MHz	Crystal dependent	5 ms typ, max is crystal dependent
DSI	0 MHz	Input dependent	66 MHz	Input dependent	Input dependent
PLL	24 MHz	Input dependent	67 MHz	Input dependent	250 µs max
Doubler	48 MHz	Input dependent	48 MHz	Input dependent	1 µs max
ILO	1 kHz	–50%, +100%	100 kHz	–55%, +100%	15 ms max in lowest power mode
kHzECO	32 kHz	Crystal dependent	32 kHz	Crystal dependent	500 ms typ, max is crystal dependent

Figure 6-1. Clocking Subsystem

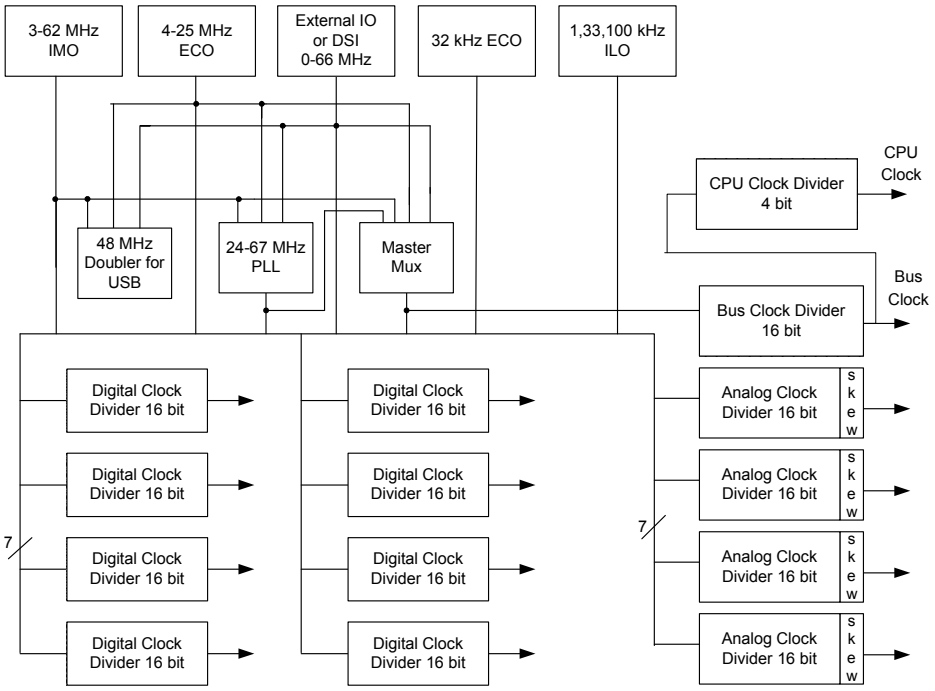

6.1.1 Internal Oscillators

6.1.1.1 Internal Main Oscillator

In most designs the IMO is the only clock source required, due to its ±1-percent accuracy. The IMO operates with no external components and outputs a stable clock. A factory trim for each frequency range is stored in the device. With the factory trim, tolerance varies from ±1 percent at 3 MHz, up to ±7 percent at 62 MHz. The IMO, in conjunction with the PLL, allows generation of other clocks up to the device's maximum frequency (see PLL). The IMO provides clock outputs at 3, 6, 12, 24, 48, and 62 MHz.

6.1.1.2 Clock Doubler

The clock doubler outputs a clock at twice the frequency of the input clock. The doubler works at input frequency of 24 MHz, providing 48 MHz for the USB. It can be configured to use a clock from the IMO, MHzECO, or the DSI (external pin).

6.1.1.3 PLL

The PLL allows low-frequency, high-accuracy clocks to be multiplied to higher frequencies. This is a trade off between higher clock frequency and accuracy and, higher power consumption and increased startup time.

The PLL block provides a mechanism for generating clock frequencies based upon a variety of input sources. The PLL outputs clock frequencies in the range of 24 to 67 MHz. Its input and feedback dividers supply 4032 discrete ratios to create almost any desired clock frequency. The accuracy of the PLL output depends on the accuracy of the PLL input source. The most common PLL use is to multiply the IMO clock at 3 MHz, where it is most accurate, to generate the other clocks up to the device's maximum frequency.

The PLL achieves phase lock within 250 µs (verified by bit setting). It can be configured to use a clock from the IMO, MHzECO or DSI (external pin). The PLL clock source can be used until lock is complete and signaled with a lock bit. The lock signal can be routed through the DSI to generate an interrupt. Disable the PLL before entering low-power modes.

6.1.1.4 Internal Low-Speed Oscillator

The ILO provides clock frequencies for low-power consumption, including the watchdog timer, and sleep timer. The ILO generates up to three different clocks: 1 kHz, 33 kHz, and 100 kHz. The 1-kHz clock (CLK1K) is typically used for a background 'heartbeat' timer. This clock inherently lends itself to low-power supervisory operations such as the watchdog timer and long sleep intervals using the central timewheel (CTW).

The central timewheel is a 1-kHz, free running, 13-bit counter clocked by the ILO. The central timewheel is always enabled, except in hibernate mode and when the CPU is stopped during debug on chip mode. It can be used to generate periodic interrupts for timing purposes or to wake the system from a low-power mode. Firmware can reset the central timewheel. Systems that require accurate timing should use the RTC capability instead of the central timewheel.

The 100-kHz clock (CLK100K) can be used as a low power master clock. It can also generate time intervals using the fast timewheel.

The fast timewheel is a 5-bit counter, clocked by the 100-kHz clock. It features programmable settings and automatically resets when the terminal count is reached. An optional interrupt can be generated each time the terminal count is reached. This enables flexible, periodic interrupts of the CPU at a higher rate than is allowed using the central timewheel.

The 33-kHz clock (CLK33K) comes from a divide-by-3 operation on CLK100K. This output can be used as a reduced accuracy version of the 32.768-kHz ECO clock with no need for a crystal.

6.1.2 External Oscillators

6.1.2.1 MHz External Crystal Oscillator

The MHzECO provides high frequency, high precision clocking using an external crystal (see Figure 6-2). It supports a wide variety of crystal types, in the range of 4 to 25 MHz. When used in conjunction with the PLL, it can generate other clocks up to the device's maximum frequency (see PLL). The GPIO pins connecting to the external crystal and capacitors are fixed. MHzECO accuracy depends on the crystal chosen.

Figure 6-2. MHzECO Block Diagram

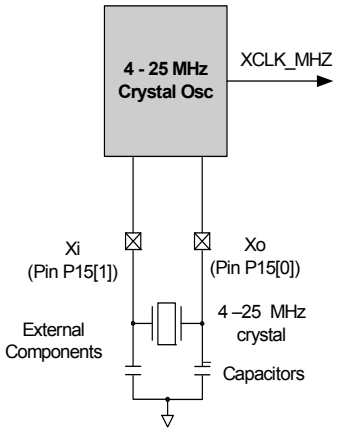

6.1.2.2 32.768-kHz ECO

The 32.768-kHz external crystal oscillator (32kHzECO) provides precision timing with minimal power consumption using an external 32.768-kHz watch crystal (see Figure 6-3). The 32kHzECO also connects directly to the sleep timer and provides the source for the RTC. The RTC uses a 1-second interrupt to implement the RTC functionality in firmware.

The oscillator works in two distinct power modes. This allows users to trade off power consumption with noise immunity from neighboring circuits. The GPIO pins connected to the external crystal and capacitors are fixed.

Figure 6-3. 32kHzECO Block Diagram

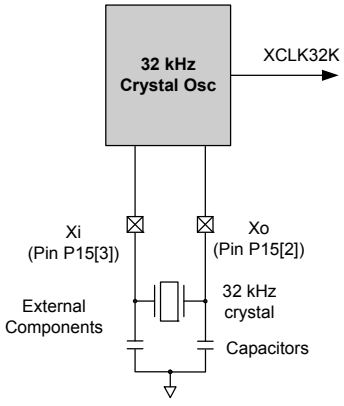

It is recommended that the external 32.768-kHz watch crystal have a load capacitance (CL) of 6 pF or 12.5 pF. Check the crystal manufacturer's datasheet. The two external capacitors, CL1 and CL2, are typically of the same value, and their total capacitance, CL1CL2 / (CL1 + CL2), including pin and trace capacitance, should equal the crystal CL value. For more information, refer to application note AN54439: PSoC 3 and PSoC 5 External Oscillators. See also pin capacitance specifications in the "GPIO" section on page 74.

6.1.2.3 Digital System Interconnect

The DSI provides routing for clocks taken from external clock oscillators connected to I/O. The oscillators can also be generated within the device in the digital system and UDBs.

While the primary DSI clock input provides access to all clocking resources, up to eight other DSI clocks (internally or externally generated) may be routed directly to the eight digital clock dividers. This is only possible if there are multiple precision clock sources.

6.1.3 Clock Distribution

All seven clock sources are inputs to the central clock distribution system. The distribution system is designed to create multiple high precision clocks. These clocks are customized for the design's requirements and eliminate the common problems found with limited resolution prescalers attached to peripherals. The clock distribution system generates several types of clock trees.

- The master clock is used to select and supply the fastest clock in the system for general clock requirements and clock synchronization of the PSoC device.
- Bus clock 16-bit divider uses the master clock to generate the bus clock used for data transfers. Bus clock is the source clock for the CPU clock divider.
- Eight fully programmable 16-bit clock dividers generate digital system clocks for general use in the digital system, as configured by the design's requirements. Digital system clocks can generate custom clocks derived from any of the seven clock sources for any purpose. Examples include baud rate generators, accurate PWM periods, and timer clocks, and many others. If more than eight digital clock dividers are required, the UDBs and fixed function timer/counter/PWMs can also generate clocks.
- Four 16-bit clock dividers generate clocks for the analog system components that require clocking, such as ADC and mixers. The analog clock dividers include skew control to ensure that critical analog events do not occur simultaneously with digital switching events. This is done to reduce analog system noise.

Each clock divider consists of an 8-input multiplexer, a 16-bit clock divider (divide by 2 and higher) that generates ~50 percent duty cycle clocks, master clock resynchronization logic, and deglitch logic. The outputs from each digital clock tree can be routed into the digital system interconnect and then brought back into the clock system as an input, allowing clock chaining of up to 32 bits.

6.1.4 USB Clock Domain

The USB clock domain is unique in that it operates largely asynchronously from the main clock network. The USB logic contains a synchronous bus interface to the chip, while running on an asynchronous clock to process USB data. The USB logic requires a 48 MHz frequency. This frequency can be generated from different sources, including DSI clock at 48 MHz or doubled value of 24 MHz from internal oscillator, DSI signal, or crystal oscillator.

6.2 Power System

The power system consists of separate analog, digital, and I/O supply pins, labeled VDDA, VDDD, and VDDIOX, respectively. It also includes two internal 1.8-V regulators that provide the digital (VCCD) and analog (VCCA) supplies for the internal core logic. The output pins of the regulators (VCCD and VCCA) and the VDDIO pins must have capacitors connected as shown in Figure 6-4. The two VCCD pins must be shorted together, with as short a trace as possible, and connected to a 1-µF ±10-percent X5R capacitor. The power system also contains a sleep regulator, an I²C regulator, and a hibernate regulator.

Figure 6-4. PSoC Power System

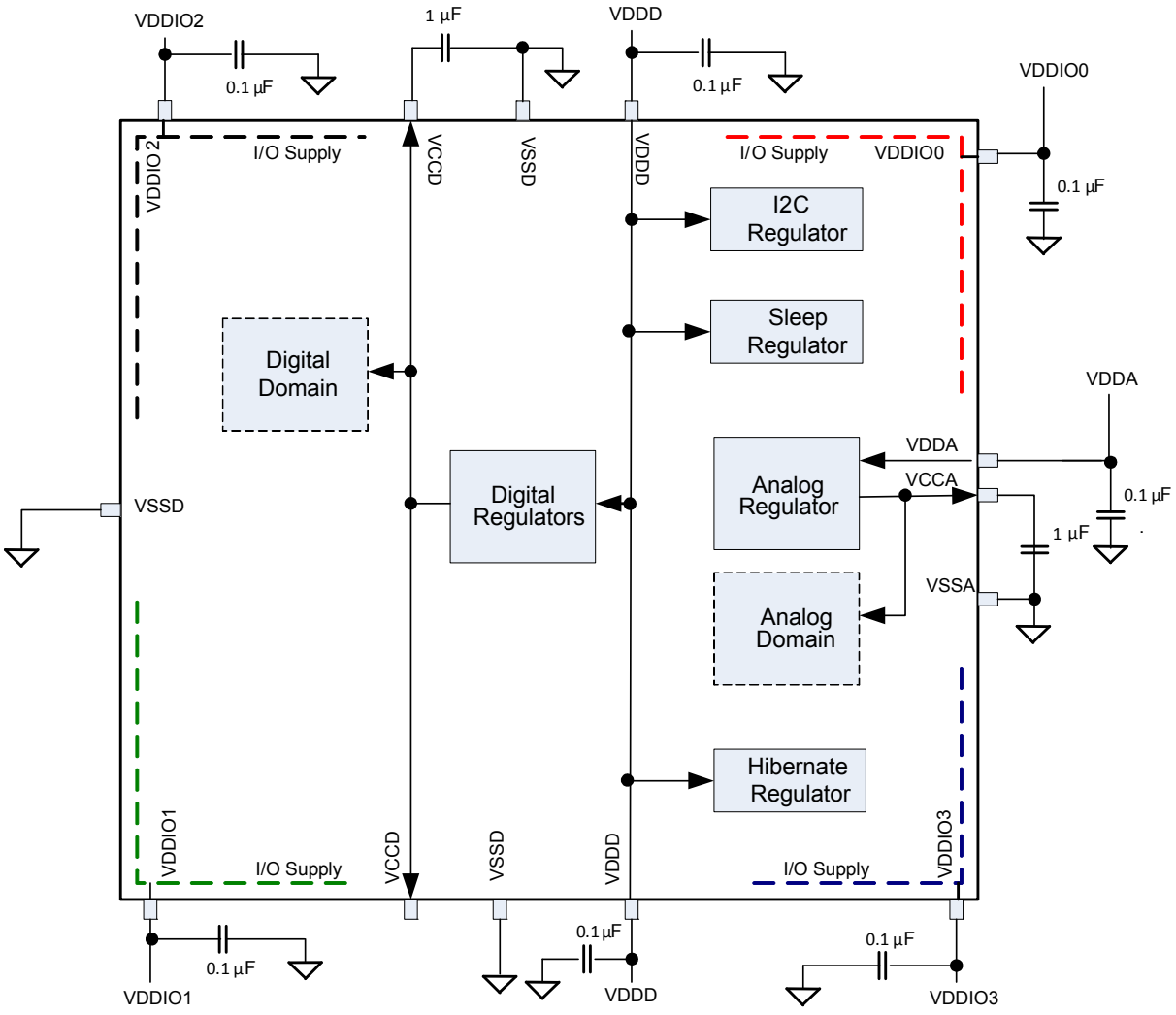

Note The two VCCD pins must be connected together with as short a trace as possible. A trace under the device is recommended, as shown in Figure 2-6 on page 9.

You can power the device in internally regulated mode, where the voltage applied to the V_{DDx} pins is as high as 5.5 V, and the internal regulators provide the core voltages. **In this mode, do not apply power to the V_{CCx} pins, and do not tie the V_{DDx} pins to the V_{CCx} pins.**

You can also power the device in externally regulated mode, that is, by directly powering the V_{CCD} and V_{CCA} pins. In this configuration, the V_{DDD} pins should be shorted to the V_{CCD} pins and the V_{DDA} pin should be shorted to the V_{CCA} pin. The allowed supply range in this configuration is 1.71 V to 1.89 V. After power up in this configuration, the internal regulators are on by default, and should be disabled to reduce power consumption.

6.2.1 Power Modes

PSoC 3 devices have four different power modes, as shown in Table 6-2 and Table 6-3. The power modes allow a design to easily provide required functionality and processing power while simultaneously minimizing power consumption and maximizing battery life in low-power and portable devices.

PSoC 3 power modes, in order of decreasing power consumption are:

- Active
- Alternate Active
- Sleep
- Hibernate

Active is the main processing mode. Its functionality is configurable. Each power controllable subsystem is enabled or disabled by using separate power configuration template registers. In alternate active mode, fewer subsystems are enabled, reducing power. In sleep mode most resources are disabled regardless of the template settings. Sleep mode is optimized to provide timed sleep intervals and Real Time Clock functionality. The lowest power mode is hibernate, which retains register and SRAM state, but no clocks, and allows wakeup only from I/O pins. Figure 6-5 on page 31 illustrates the allowable transitions between power modes. Sleep and hibernate modes should not be entered until all VDDIO supplies are at valid voltage levels.

Table 6-2. Power Modes

Power Modes	Description	Entry Condition	Wakeup Source	Active Clocks	Regulator
Active	Primary mode of operation, all peripherals available (programmable)	Wakeup, reset, manual register entry	Any interrupt	Any (programmable)	All regulators available. Digital and analog regulators can be disabled if external regulation used.
Alternate Active	Similar to Active mode, and is typically configured to have fewer peripherals active to reduce power. One possible configuration is to use the UDBs for processing, with the CPU turned off	Manual register entry	Any interrupt	Any (programmable)	All regulators available. Digital and analog regulators can be disabled if external regulation used.
Sleep	All subsystems automatically disabled	Manual register entry	Comparator, PICU, I^2C, RTC, CTW, LVD	ILO/kHzECO	Both digital and analog regulators buzzed. Digital and analog regulators can be disabled if external regulation used.
Hibernate	All subsystems automatically disabled Lowest power consuming mode with all peripherals and internal regulators disabled, except hibernate regulator is enabled Configuration and memory contents retained	Manual register entry	PICU		Only hibernate regulator active.

Table 6-3. Power Modes Wakeup Time and Power Consumption

Sleep Modes	Wakeup Time	Current (typ)	Code Execution	Digital Resources	Analog Resources	Clock Sources Available	Wakeup Sources	Reset Sources
Active	–	1.2 mA[11]	Yes	All	All	All	–	All
Alternate Active	–	–	User defined	All	All	All	–	All
Sleep	<15 µs	1 µA	No	I^2C	Comparator	ILO/kHzECO	Comparator, PICU, I^2C, RTC, CTW, LVD	XRES, LVD, WDR
Hibernate	<100 µs	200 nA	No	None	None	None	PICU	XRES

Note
11. Bus clock off. Execute from cache at 6 MHz. See Table 11-2 on page 66.

Figure 6-5. Power Mode Transitions

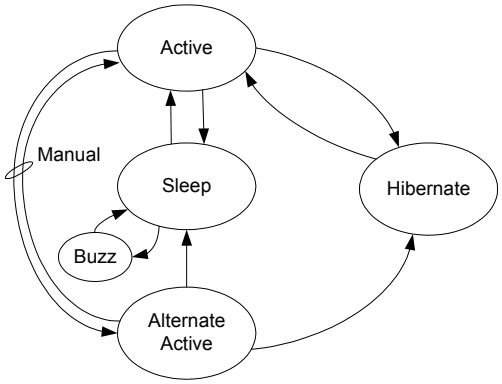

6.2.1.1 Active Mode

Active mode is the primary operating mode of the device. When in active mode, the active configuration template bits control which available resources are enabled or disabled. When a resource is disabled, the digital clocks are gated, analog bias currents are disabled, and leakage currents are reduced as appropriate. User firmware can dynamically control subsystem power by setting and clearing bits in the active configuration template. The CPU can disable itself, in which case the CPU is automatically reenabled at the next wakeup event.

When a wakeup event occurs, the global mode is always returned to active, and the CPU is automatically enabled, regardless of its template settings. Active mode is the default global power mode upon boot.

6.2.1.2 Alternate Active Mode

Alternate Active mode is very similar to Active mode. In alternate active mode, fewer subsystems are enabled, to reduce power consumption. One possible configuration is to turn off the CPU and flash, and run peripherals at full speed.

6.2.1.3 Sleep Mode

Sleep mode reduces power consumption when a resume time of 15 µs is acceptable. The wake time is used to ensure that the regulator outputs are stable enough to directly enter active mode.

6.2.1.4 Hibernate Mode

In hibernate mode nearly all of the internal functions are disabled. Internal voltages are reduced to the minimal level to keep vital systems alive. Configuration state is preserved in hibernate mode and SRAM memory is retained. GPIOs configured as digital outputs maintain their previous values and external GPIO pin interrupt settings are preserved. The device can only return from hibernate mode in response to an external I/O interrupt. The resume time from hibernate mode is less than 100 µs.

To achieve an extremely low current, the hibernate regulator has limited capacity. This limits the frequency of any signal present on the input pins - no GPIO should toggle at a rate greater than 10 kHz while in hibernate mode. If pins must be toggled at a high rate while in a low power mode, use sleep mode instead.

6.2.1.5 Wakeup Events

Wakeup events are configurable and can come from an interrupt or device reset. A wakeup event restores the system to active mode. Firmware enabled interrupt sources include internally generated interrupts, power supervisor, central timewheel, and I/O interrupts. Internal interrupt sources can come from a variety of peripherals, such as analog comparators and UDBs. The central timewheel provides periodic interrupts to allow the system to wake up, poll peripherals, or perform real-time functions. Reset event sources include the external reset I/O pin (XRES), WDT, and precision reset (PRES).

6.3 Reset

CY8C36 has multiple internal and external reset sources available. The reset sources are:

- Power source monitoring – The analog and digital power voltages, VDDA, VDDD, VCCA, and VCCD are monitored in several different modes during power up, active mode, and sleep mode (buzzing). If any of the voltages goes outside predetermined ranges then a reset is generated. The monitors are programmable to generate an interrupt to the processor under certain conditions before reaching the reset thresholds.
- External – The device can be reset from an external source by pulling the reset pin ($\overline{\text{XRES}}$) low. The $\overline{\text{XRES}}$ pin includes an internal pull-up to VDDIO1. VDDD, VDDA, and VDDIO1 must all have voltage applied before the part comes out of reset.
- Watchdog timer – A watchdog timer monitors the execution of instructions by the processor. If the watchdog timer is not reset by firmware within a certain period of time, the watchdog timer generates a reset.
- Software – The device can be reset under program control.

Figure 6-6. Resets

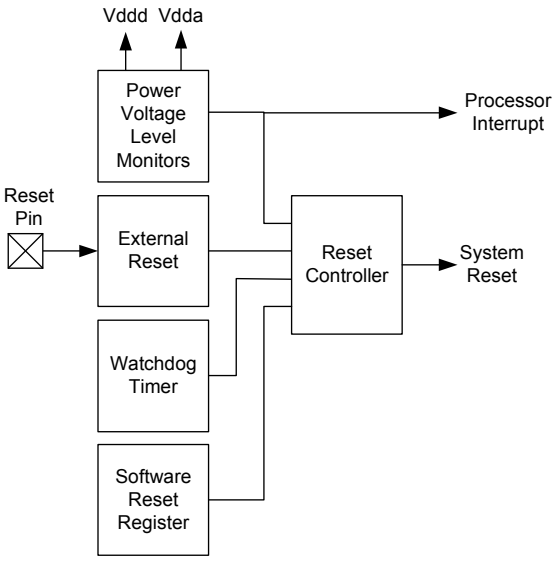

The term **device reset** indicates that the processor as well as analog and digital peripherals and registers are reset.

A reset status register shows some of the resets or power voltage monitoring interrupts. The program may examine this register to

detect and report certain exception conditions. This register is cleared after a power-on reset. For details see the Technical Reference Manual.

6.3.1 Reset Sources

6.3.1.1 Power Voltage Level Monitors

- IPOR – Initial power-on reset

  At initial power on, IPOR monitors the power voltages V_{DDD}, V_{DDA}, V_{CCD} and V_{CCA}. The trip level is not precise. It is set to approximately 1 volt, which is below the lowest specified operating voltage but high enough for the internal circuits to be reset and to hold their reset state. The monitor generates a reset pulse that is at least 150 ns wide. It may be much wider if one or more of the voltages ramps up slowly.

  If after the IPOR triggers either V_{DDX} drops back below the trigger point, in a non-monotonic fashion, it must remain below that point for at least 10 µs. The hysteresis of the IPOR trigger point is typically 100 mV.

  After boot, the IPOR circuit is disabled and voltage supervision is handed off to the precise low-voltage reset (PRES) circuit.

- PRES – Precise low voltage reset

  This circuit monitors the outputs of the analog and digital internal regulators after power up. The regulator outputs are compared to a precise reference voltage. The response to a PRES trip is identical to an IPOR reset.

  After PRES has been deasserted, at least 10 µs must elapse before it can be reasserted.

  In normal operating mode, the program cannot disable the digital PRES circuit. The analog regulator can be disabled, which also disables the analog portion of the PRES. The PRES circuit is disabled automatically during sleep and hibernate modes, with one exception: During sleep mode the regulators are periodically activated (buzzed) to provide supervisory services and to reduce wakeup time. At these times the PRES circuit is also buzzed to allow periodic voltage monitoring.

- ALVI, DLVI, AHVI – Analog/digital low voltage interrupt, analog high voltage interrupt

  Interrupt circuits are available to detect when VDDA and VDDD go outside a voltage range. For AHVI, VDDA is compared to a fixed trip level. For ALVI and DLVI, VDDA and VDDD are compared to trip levels that are programmable, as listed in Table 6-4. ALVI and DLVI can also be configured to generate a device reset instead of an interrupt.

Table 6-4. Analog/Digital Low Voltage Interrupt, Analog High Voltage Interrupt

Interrupt	Supply	Normal Voltage Range	Available Trip Settings
DLVI	VDDD	1.71 V–5.5 V	1.70 V–5.45 V in 250 mV increments
ALVI	VDDA	1.71 V–5.5 V	1.70 V–5.45 V in 250 mV increments
AHVI	VDDA	1.71 V–5.5 V	5.75 V

  The monitors are disabled until after IPOR. During sleep mode these circuits are periodically activated (buzzed). If an interrupt occurs during buzzing then the system first enters its wakeup sequence. The interrupt is then recognized and may be serviced.

  The buzz frequency is adjustable, and should be set to be less than the minimum time that any voltage is expected to be out of range. For details on how to adjust the buzz frequency, see the TRM.

6.3.1.2 Other Reset Sources

- XRES – External reset

  PSoC 3 has either a single GPIO pin that is configured as an external reset or a dedicated XRES pin. Either the dedicated XRES pin or the GPIO pin, if configured, holds the part in reset while held active (low). The response to an XRES is the same as to an IPOR reset.

  After XRES has been deasserted, at least 10 µs must elapse before it can be reasserted.

  The external reset is active low. It includes an internal pull-up resistor. XRES is active during sleep and hibernate modes.

- SRES – Software reset

  A reset can be commanded under program control by setting a bit in the software reset register. This is done either directly by the program or indirectly by DMA access. The response to a SRES is the same as after an IPOR reset.

  Another register bit exists to disable this function.

- WRES – Watchdog timer reset

  The watchdog reset detects when the software program is no longer being executed correctly. To indicate to the watchdog timer that it is running correctly, the program must periodically reset the timer. If the timer is not reset before a user-specified amount of time, then a reset is generated.

  Note IPOR disables the watchdog function. The program must enable the watchdog function at an appropriate point in the code by setting a register bit. When this bit is set, it cannot be cleared again except by an IPOR power on reset event.

6.4 I/O System and Routing

PSoC I/Os are extremely flexible. Every GPIO has analog and digital I/O capability. All I/Os have a large number of drive modes, which are set at POR. PSoC also provides up to four individual I/O voltage domains through the VDDIO pins.

There are two types of I/O pins on every device; those with USB provide a third type. Both GPIO and SIO provide similar digital functionality. The primary differences are their analog capability and drive strength. Devices that include USB also provide two USBIO pins that support specific USB functionality as well as limited GPIO capability.

All I/O pins are available for use as digital inputs and outputs for both the CPU and digital peripherals. In addition, all I/O pins can generate an interrupt. The flexible and advanced capabilities of the PSoC I/O, combined with any signal to any pin routability, greatly simplify circuit design and board layout. All GPIO pins can be used for analog input, CapSense[12], and LCD segment drive, while SIO pins are used for voltages in excess of VDDA and for programmable output voltages.

- Features supported by both GPIO and SIO:
  - User programmable port reset state
  - Separate I/O supplies and voltages for up to four groups of I/O
  - Digital peripherals use DSI to connect the pins
  - Input or output or both for CPU and DMA
  - Eight drive modes
  - Every pin can be an interrupt source configured as rising edge, falling edge or both edges. If required, level sensitive interrupts are supported through the DSI
  - Dedicated port interrupt vector for each port
  - Slew rate controlled digital output drive mode
  - Access port control and configuration registers on either port basis or pin basis
  - Separate port read (PS) and write (DR) data registers to avoid read modify write errors
  - Special functionality on a pin by pin basis
- Additional features only provided on the GPIO pins:
  - LCD segment drive on LCD equipped devices
  - CapSense[12]
  - Analog input and output capability
  - Continuous 100 µA clamp current capability
  - Standard drive strength down to 1.7 V
- Additional features only provided on SIO pins:
  - Higher drive strength than GPIO
  - Hot swap capability (5 V tolerance at any operating V_{DD})
  - Programmable and regulated high input and output drive levels down to 1.2 V
  - No analog input, CapSense, or LCD capability
  - Over voltage tolerance up to 5.5 V
  - SIO can act as a general purpose analog comparator
- USBIO features:
  - Full speed USB 2.0 compliant I/O
  - Highest drive strength for general purpose use
  - Input, output, or both for CPU and DMA
  - Input, output, or both for digital peripherals
  - Digital output (CMOS) drive mode
  - Each pin can be an interrupt source configured as rising edge, falling edge, or both edges

Note
12. GPIOs with opamp outputs are not recommended for use with CapSense.

Figure 6-7. GPIO Block Diagram

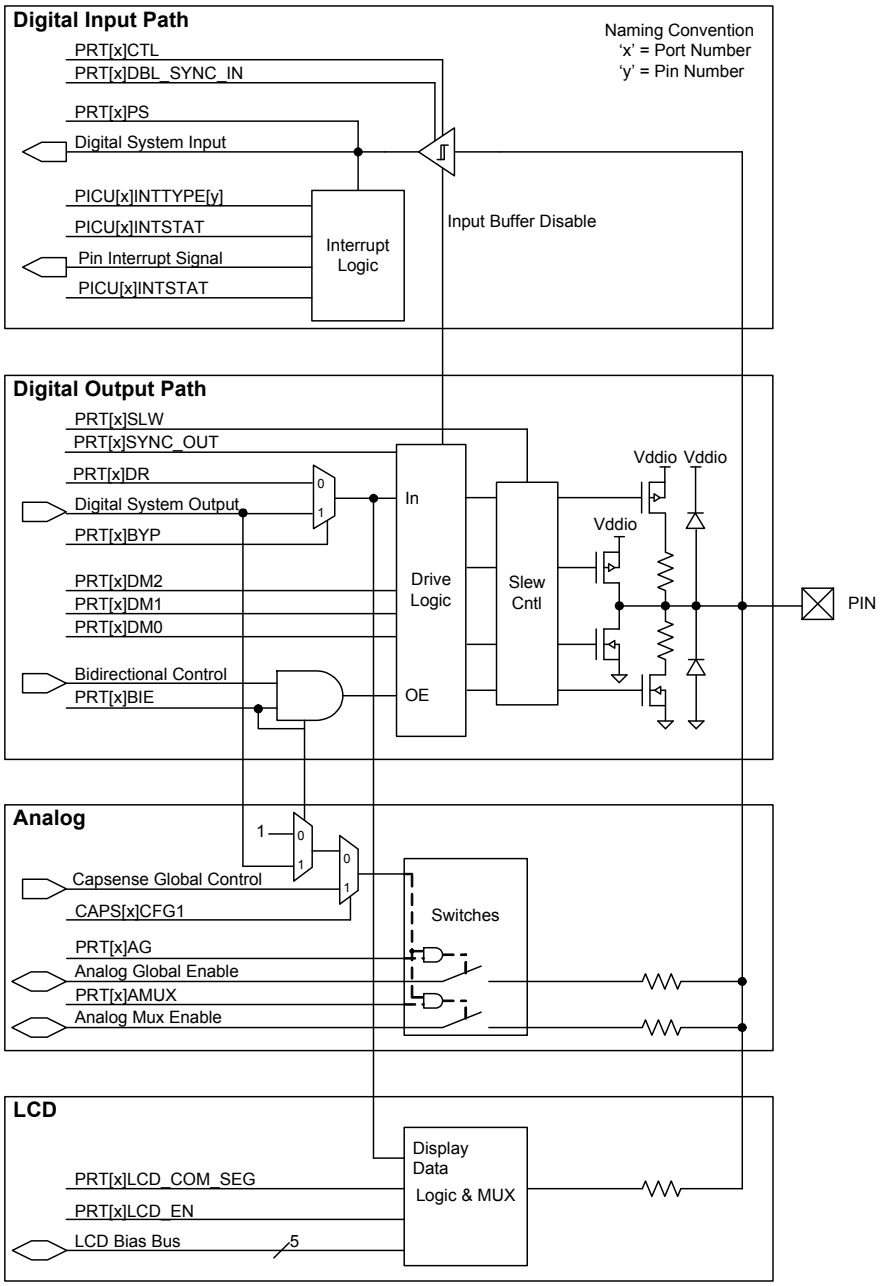

Figure 6-8. SIO Input/Output Block Diagram

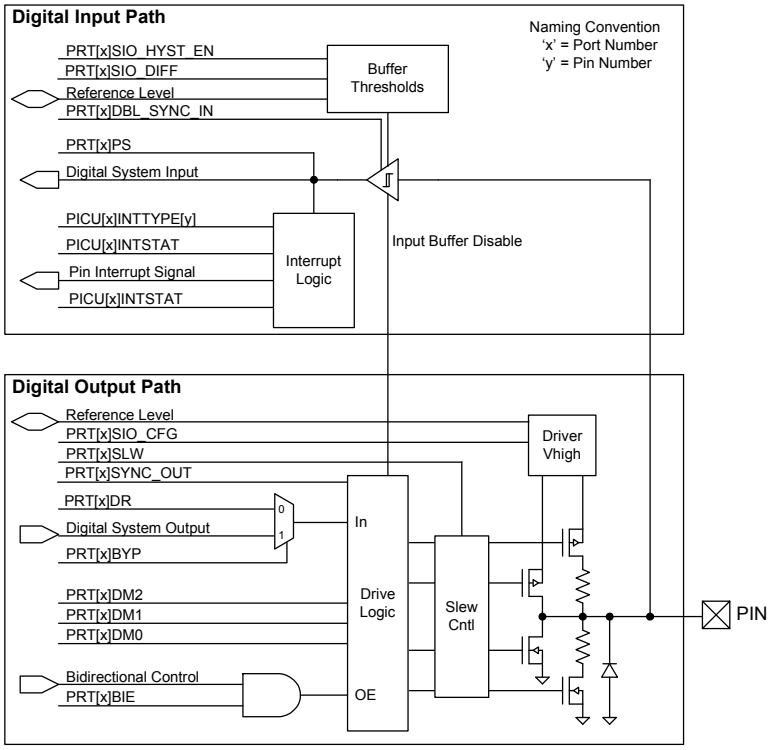

Figure 6-9. USBIO Block Diagram

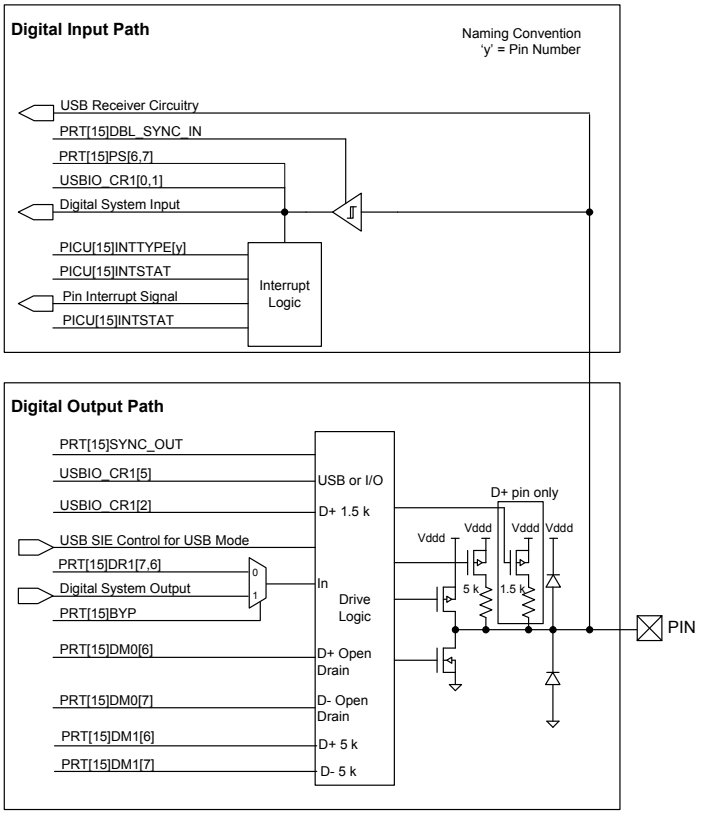

6.4.1 Drive Modes

Each GPIO and SIO pin is individually configurable into one of the eight drive modes listed in Table 6-5. Three configuration bits are used for each pin (DM[2:0]) and set in the PRTxDM[2:0] registers. Figure 6-10 depicts a simplified pin view based on each of the eight drive modes. Table 6-5 shows the I/O pin's drive state based on the port data register value or digital array signal if bypass mode is selected. Note that the actual I/O pin voltage is determined by a combination of the selected drive mode and the load at the pin. For example, if a GPIO pin is configured for resistive pull-up mode and driven high while the pin is floating, the voltage measured at the pin is a high logic state. If the same GPIO pin is externally tied to ground then the voltage unmeasured at the pin is a low logic state.

Figure 6-10. Drive Mode

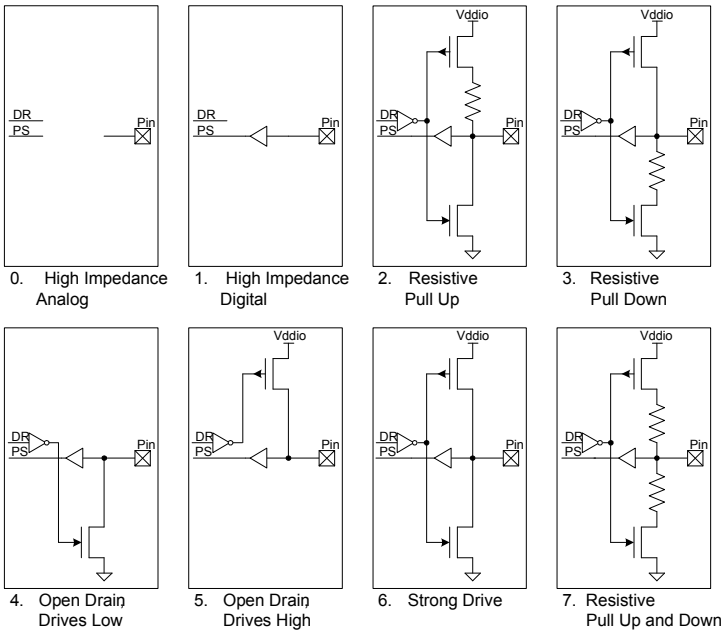

Table 6-5. Drive Modes

Diagram	Drive Mode	PRTxDM2	PRTxDM1	PRTxDM0	PRTxDR = 1	PRTxDR = 0
0	High impedance analog	0	0	0	High Z	High Z
1	High Impedance digital	0	0	1	High Z	High Z
2	Resistive pull-up[13]	0	1	0	Res High (5K)	Strong Low
3	Resistive pull-down[13]	0	1	1	Strong High	Res Low (5K)
4	Open drain, drives low	1	0	0	High Z	Strong Low
5	Open drain, drive high	1	0	1	Strong High	High Z
6	Strong drive	1	1	0	Strong High	Strong Low
7	Resistive pull-up and pull-down[13]	1	1	1	Res High (5K)	Res Low (5K)

Note
13. Resistive pull-up and pull-down are not available with SIO in regulated output mode.

The USBIO pins (P15[7] and P15[6]), when enabled for I/O mode, have limited drive mode control. The drive mode is set using the PRT15.DM0[7, 6] register. A resistive pull option is also available at the USBIO pins, which can be enabled using the PRT15.DM1[7, 6] register. When enabled for USB mode, the drive mode control has no impact on the configuration of the USB pins. Unlike the GPIO and SIO configurations, the port wide configuration registers do not configure the USB drive mode bits. Table 6-6 shows the drive mode configuration for the USBIO pins.

Table 6-6. USBIO Drive Modes (P15[7] and P15[6])

PRT15.DM1[7,6] Pull up enable	PRT15.DM0[7,6] Drive Mode enable	PRT15.DR[7,6] = 1	PRT15.DR[7,6] = 0	Description
0	0	High Z	Strong Low	Open Drain, Strong Low
0	1	Strong High	Strong Low	Strong Outputs
1	0	Res High (5k)	Strong Low	Resistive Pull Up, Strong Low
1	1	Strong High	Strong Low	Strong Outputs

- High impedance analog

  The default reset state with both the output driver and digital input buffer turned off. This prevents any current from flowing in the I/O's digital input buffer due to a floating voltage. This state is recommended for pins that are floating or that support an analog voltage. High impedance analog pins do not provide digital input functionality.

  To achieve the lowest chip current in sleep modes, all I/Os must either be configured to the high impedance analog mode, or have their pins driven to a power supply rail by the PSoC device or by external circuitry.

- High impedance digital

  The input buffer is enabled for digital signal input. This is the standard high impedance (High Z) state recommended for digital inputs.

- Resistive pull-up or resistive pull-down

  Resistive pull-up or pull-down, respectively, provides a series resistance in one of the data states and strong drive in the other. Pins can be used for digital input and output in these modes. Interfacing to mechanical switches is a common application for these modes. Resistive pullup and pull-down are not available with SIO in regulated output mode.

- Open drain, drives high and open drain, drives low

  Open drain modes provide high impedance in one of the data states and strong drive in the other. Pins can be used for digital input and output in these modes. A common application for these modes is driving the I^2C bus signal lines.

- Strong drive

  Provides a strong CMOS output drive in either high or low state. This is the standard output mode for pins. Strong Drive mode pins must not be used as inputs under normal circumstances. This mode is often used to drive digital output signals or external FETs.

- Resistive pull-up and pull-down

  Similar to the resistive pull-up and resistive pull-down modes except the pin is always in series with a resistor. The high data state is pull-up while the low data state is pull-down. This mode is most often used when other signals that may cause shorts can drive the bus. Resistive pullup and pull-down are not available with SIO in regulated output mode.

6.4.2 Pin Registers

Registers to configure and interact with pins come in two forms that may be used interchangeably.

All I/O registers are available in the standard port form, where each bit of the register corresponds to one of the port pins. This register form is efficient for quickly reconfiguring multiple port pins at the same time.

I/O registers are also available in pin form, which combines the eight most commonly used port register bits into a single register for each pin. This enables very fast configuration changes to individual pins with a single register write.

6.4.3 Bidirectional Mode

High speed bidirectional capability allows pins to provide both the high impedance digital drive mode for input signals and a second user selected drive mode such as strong drive (set using PRT×DM[2:0] registers) for output signals on the same pin, based on the state of an auxiliary control bus signal. The bidirectional capability is useful for processor busses and communications interfaces such as the SPI Slave MISO pin that requires dynamic hardware control of the output buffer.

The auxiliary control bus routes up to 16 UDB or digital peripheral generated output enable signals to one or more pins.

6.4.4 Slew Rate Limited Mode

GPIO and SIO pins have fast and slow output slew rate options for strong and open drain drive modes, not resistive drive modes. Because it results in reduced EMI, the slow edge rate option is recommended for signals that are not speed critical, generally less than 1 MHz. The fast slew rate is for signals between 1 MHz and 33 MHz. The slew rate is individually configurable for each pin, and is set by the PRT×SLW registers.

6.4.5 Pin Interrupts

All GPIO and SIO pins are able to generate interrupts to the system. All eight pins in each port interface to their own Port Interrupt Control Unit (PICU) and associated interrupt vector. Each pin of the port is independently configurable to detect rising edge, falling edge, both edge interrupts, or to not generate an interrupt.

Depending on the configured mode for each pin, each time an interrupt event occurs on a pin, its corresponding status bit of the interrupt status register is set to '1' and an interrupt request is sent to the interrupt controller. Each PICU has its own interrupt vector in the interrupt controller and the pin status register providing easy determination of the interrupt source down to the pin level.

Port pin interrupts remain active in all sleep modes allowing the PSoC device to wake from an externally generated interrupt. While level sensitive interrupts are not directly supported; UDB provide this functionality to the system when needed.

6.4.6 Input Buffer Mode

GPIO and SIO input buffers can be configured at the port level for the default CMOS input thresholds or the optional LVTTL input thresholds. All input buffers incorporate Schmitt triggers for input hysteresis. Additionally, individual pin input buffers can be disabled in any drive mode.

6.4.7 I/O Power Supplies

Up to four I/O pin power supplies are provided depending on the device and package. Each I/O supply must be less than or equal to the voltage on the chip's analog (VDDA) pin. This feature allows users to provide different I/O voltage levels for different pins on the device. Refer to the specific device package pinout to determine VDDIO capability for a given port and pin. The SIO port pins support an additional regulated high output capability, as described in Adjustable Output Level.

6.4.8 Analog Connections

These connections apply only to GPIO pins. All GPIO pins may be used as analog inputs or outputs. The analog voltage present on the pin must not exceed the VDDIO supply voltage to which the GPIO belongs. Each GPIO may connect to one of the analog global busses or to one of the analog mux buses to connect any pin to any internal analog resource such as ADC or comparators. In addition, select pins provide direct connections to specific analog features such as the high current DACs or uncommitted opamps.

6.4.9 CapSense

This section applies only to GPIO pins. All GPIO pins may be used to create CapSense buttons and sliders[14]. See the "CapSense" section on page 58 for more information.

6.4.10 LCD Segment Drive

This section applies only to GPIO pins. All GPIO pins may be used to generate Segment and Common drive signals for direct glass drive of LCD glass. See the "LCD Direct Drive" section on page 57 for details.

6.4.11 Adjustable Output Level

This section applies only to SIO pins. SIO port pins support the ability to provide a regulated high output level for interface to external signals that are lower in voltage than the SIO's respective VDDIO. SIO pins are individually configurable to output either the standard VDDIO level or the regulated output, which is based on an internally generated reference. Typically a voltage DAC (VDAC) is used to generate the reference (see Figure 6-11). The "DAC" section on page 59 has more details on VDAC use and reference routing to the SIO pins. Resistive pullup and pull-down drive modes are not available with SIO in regulated output mode.

6.4.12 Adjustable Input Level

This section applies only to SIO pins. SIO pins by default support the standard CMOS and LVTTL input levels but also support a differential mode with programmable levels. SIO pins are grouped into pairs. Each pair shares a reference generator block which, is used to set the digital input buffer reference level for interface to external signals that differ in voltage from VDDIO. The reference sets the pins voltage threshold for a high logic level (see Figure 6-11). Available input thresholds are:

- 0.5 × VDDIO
- 0.4 × VDDIO
- 0.5 × V_{REF}
- V_{REF}

Typically a voltage DAC (VDAC) generates the V_{REF} reference. "DAC" section on page 59 has more details on VDAC use and reference routing to the SIO pins.

Note
14. GPIOs with opamp outputs are not recommended for use with CapSense.

Figure 6-11. SIO Reference for Input and Output

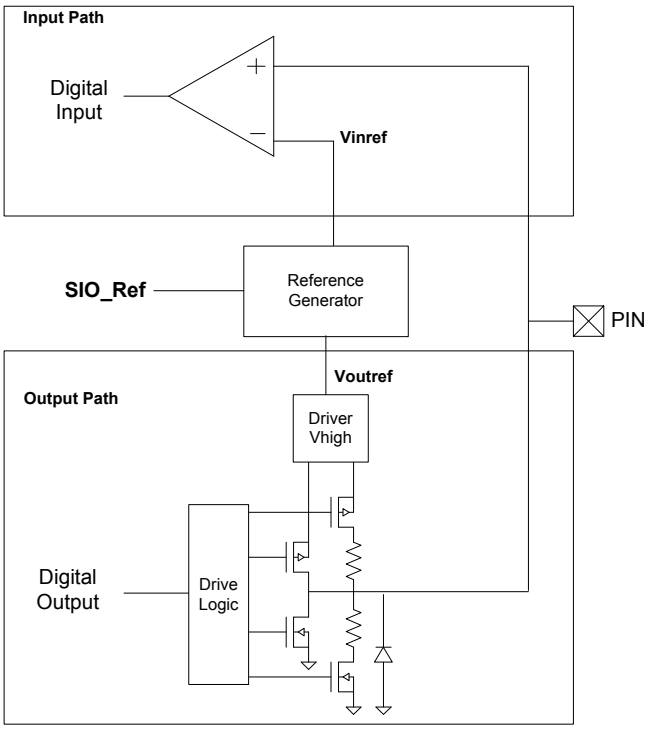

6.4.13 SIO as Comparator

This section applies only to SIO pins. The adjustable input level feature of the SIOs as explained in the Adjustable Input Level section can be used to construct a comparator. The threshold for the comparator is provided by the SIO's reference generator. The reference generator has the option to set the analog signal routed through the analog global line as threshold for the comparator. Note that a pair of SIO pins share the same threshold. The digital input path in Figure 6-8 on page 35 illustrates this functionality. In the figure, 'Reference level' is the analog signal routed through the analog global. The hysteresis feature can also be enabled for the input buffer of the SIO, which increases noise immunity for the comparator.

6.4.14 Hot Swap

This section applies only to SIO pins. SIO pins support 'hot swap' capability to plug into an application without loading the signals that are connected to the SIO pins even when no power is applied to the PSoC device. This allows the unpowered PSoC to maintain a high impedance load to the external device while also preventing the PSoC from being powered through a SIO pin's protection diode.

Powering the device up or down while connected to an operational I2C bus may cause transient states on the SIO pins. The overall I2C bus design should take this into account.

6.4.15 Over Voltage Tolerance

All I/O pins provide an over voltage tolerance feature at any operating V_{DD}.

- There are no current limitations for the SIO pins as they present a high impedance load to the external circuit where VDDIO $\leq V_{IN} \leq$ 5.5 V.
- The GPIO pins must be limited to 100 µA using a current limiting resistor. GPIO pins clamp the pin voltage to approximately one diode above the VDDIO supply where VDDIO $\leq V_{IN} \leq$ VDDA.
- In case of a GPIO pin configured for analog input/output, the analog voltage on the pin must not exceed the VDDIO supply voltage to which the GPIO belongs.

A common application for this feature is connection to a bus such as I^2C where different devices are running from different supply voltages. In the I^2C case, the PSoC chip is configured into the Open Drain, Drives Low mode for the SIO pin. This allows an external pull-up to pull the I^2C bus voltage above the PSoC pin supply. For example, the PSoC chip could operate at 1.8 V, and an external device could run from 5 V. Note that the SIO pin's V_{IH} and V_{IL} levels are determined by the associated VDDIO supply pin. The SIO pin must be in one of the following modes: 0 (high impedance analog), 1 (high impedance digital), or 4 (open drain drives low). See Figure 6-10 for details. Absolute maximum ratings for the device must be observed for all I/O pins.

6.4.16 Reset Configuration

While reset is active all I/Os are reset to and held in the High Impedance Analog state. After reset is released, the state can be reprogrammed on a port-by-port basis to pull-down or pull-up. To ensure correct reset operation, the port reset configuration data is stored in special nonvolatile registers. The stored reset data is automatically transferred to the port reset configuration registers at reset release.

6.4.17 Low-Power Functionality

In all low-power modes the I/O pins retain their state until the part is awakened and changed or reset. To awaken the part, use a pin interrupt, because the port interrupt logic continues to function in all low-power modes.

6.4.18 Special Pin Functionality

Some pins on the device include additional special functionality in addition to their GPIO or SIO functionality. The specific special function pins are listed in Pinouts on page 5. The special features are:

- Digital
  - 4- to 25-MHz crystal oscillator
  - 32.768-kHz crystal oscillator
  - Wake from sleep on I^2C address match. Any pin can be used for I^2C if wake from sleep is not required.
  - JTAG interface pins
  - SWD interface pins
  - SWV interface pins
  - External reset
- Analog
  - Opamp inputs and outputs
  - High current IDAC outputs
  - External reference inputs

6.4.19 JTAG Boundary Scan

The device supports standard JTAG boundary scan chains on all I/O pins for board level test.

7. Digital Subsystem

The digital programmable system creates application specific combinations of both standard and advanced digital peripherals and custom logic functions. These peripherals and logic are then interconnected to each other and to any pin on the device, providing a high level of design flexibility and IP security.

The features of the digital programmable system are outlined here to provide an overview of capabilities and architecture. You do not need to interact directly with the programmable digital system at the hardware and register level. PSoC Creator provides a high level schematic capture graphical interface to automatically place and route resources similar to PLDs.

The main components of the digital programmable system are:

- UDB – These form the core functionality of the digital programmable system. UDBs are a collection of uncommitted logic (PLD) and structural logic (Datapath) optimized to create all common embedded peripherals and customized functionality that are application or design specific.
- Universal digital block array – UDB blocks are arrayed within a matrix of programmable interconnect. The UDB array structure is homogeneous and allows for flexible mapping of digital functions onto the array. The array supports extensive and flexible routing interconnects between UDBs and the Digital System Interconnect.
- Digital system interconnect (DSI) – Digital signals from UDBs, fixed function peripherals, I/O pins, interrupts, DMA, and other system core signals are attached to the digital system interconnect to implement full featured device connectivity. The DSI allows any digital function to any pin or other feature routability when used with the universal digital block array.

Figure 7-1. CY8C36 Digital Programmable Architecture

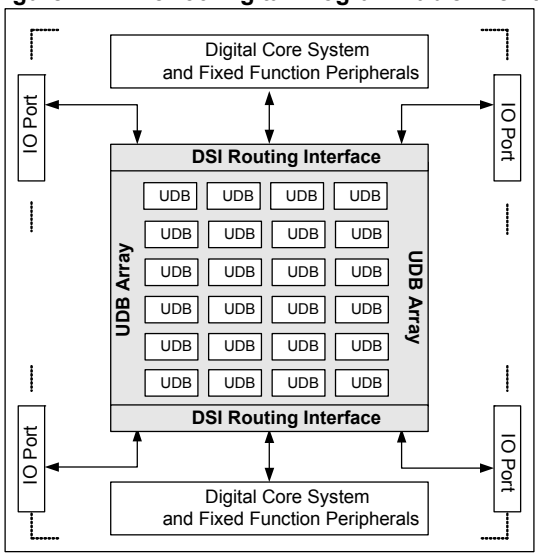

7.1 Example Peripherals

The flexibility of the CY8C36 family's UDBs and analog blocks allow the user to create a wide range of components (peripherals). The most common peripherals were built and characterized by Cypress and are shown in the PSoC Creator component catalog, however, users may also create their own custom components using PSoC Creator. Using PSoC Creator, users may also create their own components for reuse within their organization, for example sensor interfaces, proprietary algorithms, and display interfaces.

The number of components available through PSoC Creator is too numerous to list in the data sheet, and the list is always growing. An example of a component available for use in CY8C36 family, but, not explicitly called out in this data sheet is the UART component.

7.1.1 Example Digital Components

The following is a sample of the digital components available in PSoC Creator for the CY8C36 family. The exact amount of hardware resources (UDBs, routing, RAM, flash) used by a component varies with the features selected in PSoC Creator for the component.

- Communications
  - I^2C
  - UART
  - SPI
- Functions
  - EMIF
  - PWMs
  - Timers
  - Counters
- Logic
  - NOT
  - OR
  - XOR
  - AND

7.1.2 Example Analog Components

The following is a sample of the analog components available in PSoC Creator for the CY8C36 family. The exact amount of hardware resources (SC/CT blocks, routing, RAM, flash) used by a component varies with the features selected in PSoC Creator for the component.

- Amplifiers
  - TIA
  - PGA
  - opamp
- ADC
  - Delta-sigma
- DACs
  - Current
  - Voltage
  - PWM
- Comparators
- Mixers

7.1.3 Example System Function Components

The following is a sample of the system function components available in PSoC Creator for the CY8C36 family. The exact amount of hardware resources (UDBs, DFB taps, SC/CT blocks, routing, RAM, flash) used by a component varies with the features selected in PSoC Creator for the component.

- CapSense
- LCD drive
- LCD control
- Filters

7.1.4 Designing with PSoC Creator

7.1.4.1 More Than a Typical IDE

A successful design tool allows for the rapid development and deployment of both simple and complex designs. It reduces or eliminates any learning curve. It makes the integration of a new design into the production stream straightforward.

PSoC Creator is that design tool.

PSoC Creator is a full featured Integrated Development Environment (IDE) for hardware and software design. It is optimized specifically for PSoC devices and combines a modern, powerful software development platform with a sophisticated graphical design tool. This unique combination of tools makes PSoC Creator the most flexible embedded design platform available.

Graphical design entry simplifies the task of configuring a particular part. You can select the required functionality from an extensive catalog of components and place it in your design. All components are parameterized and have an editor dialog that allows you to tailor functionality to your needs.

PSoC Creator automatically configures clocks and routes the I/O to the selected pins and then generates APIs to give the application complete control over the hardware. Changing the PSoC device configuration is as simple as adding a new component, setting its parameters, and rebuilding the project.

At any stage of development you are free to change the hardware configuration and even the target processor. To retarget your application (hardware and software) to new devices, even from 8- to 32-bit families, just select the new device and rebuild.

You also have the ability to change the C compiler and evaluate an alternative. Components are designed for portability and are validated against all devices, from all families, and against all supported tool chains. Switching compilers is as easy as editing the from the project options and rebuilding the application with no errors from the generated APIs or boot code.

7.1.4.2 Component Catalog

The component catalog is a repository of reusable design elements that select device functionality and customize your PSoC device. It is populated with an impressive selection of content; from simple primitives such as logic gates and device registers, through the digital timers, counters and PWMs, plus analog components such as ADC, DACs, and filters, and communication protocols, such as I^2C, USB, and CAN. See Example Peripherals on page 40 for more details about available peripherals. All content is fully characterized and carefully documented in data sheets with code examples, AC/DC specifications, and user code ready APIs.

7.1.4.3 Design Reuse

The symbol editor gives you the ability to develop reusable components that can significantly reduce future design time. Just draw a symbol and associate that symbol with your proven design. PSoC Creator allows for the placement of the new symbol anywhere in the component catalog along with the content provided by Cypress. You can then reuse your content as many times as you want, and in any number of projects, without ever having to revisit the details of the implementation.

7.1.4.4 Software Development

Anchoring the tool is a modern, highly customizable user interface. It includes project management and integrated editors for C and assembler source code, as well the design entry tools.

Project build control leverages compiler technology from top commercial vendors such as ARM® Limited, Keil™, and CodeSourcery (GNU). Free versions of Keil C51 and GNU C Compiler (GCC) for ARM, with no restrictions on code size or end product distribution, are included with the tool distribution. Upgrading to more optimizing compilers is a snap with support for the professional Keil C51 product and ARM RealView™ compiler.

7.1.4.5 Nonintrusive Debugging

With JTAG (4-wire) and SWD (2-wire) debug connectivity available on all devices, the PSoC Creator debugger offers full control over the target device with minimum intrusion. Breakpoints and code execution commands are all readily available from toolbar buttons and an impressive lineup of windows—register, locals, watch, call stack, memory and peripherals—make for an unparalleled level of visibility into the system.

PSoC Creator contains all the tools necessary to complete a design, and then to maintain and extend that design for years to come. All steps of the design flow are carefully integrated and optimized for ease-of-use and to maximize productivity.

7.2 Universal Digital Block

The UDB represents an evolutionary step to the next generation of PSoC embedded digital peripheral functionality. The architecture in first generation PSoC digital blocks provides coarse programmability in which a few fixed functions with a small number of options are available. The new UDB architecture is the optimal balance between configuration granularity and efficient implementation. A cornerstone of this approach is to provide the ability to customize the devices digital operation to match application requirements.

To achieve this, UDBs consist of a combination of uncommitted logic (PLD), structured logic (Datapath), and a flexible routing scheme to provide interconnect between these elements, I/O connections, and other peripherals. UDB functionality ranges from simple self contained functions that are implemented in one UDB, or even a portion of a UDB (unused resources are available for other functions), to more complex functions that require multiple UDBs. Examples of basic functions are timers, counters, CRC generators, PWMs, dead band generators, and communications functions, such as UARTs, SPI, and I^2C. Also, the PLD blocks and connectivity provide full featured general purpose programmable logic within the limits of the available resources.

Figure 7-2. UDB Block Diagram

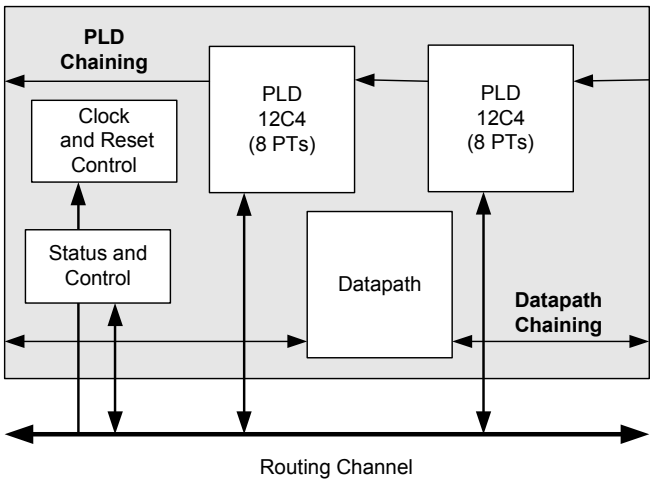

The main component blocks of the UDB are:

- PLD blocks – There are two small PLDs per UDB. These blocks take inputs from the routing array and form registered or combinational sum-of-products logic. PLDs are used to implement state machines, state bits, and combinational logic equations. PLD configuration is automatically generated from graphical primitives.
- Datapath module – This 8-bit wide datapath contains structured logic to implement a dynamically configurable ALU, a variety of compare configurations and condition generation. This block also contains input/output FIFOs, which are the primary parallel data interface between the CPU/DMA system and the UDB.
- Status and control module – The primary role of this block is to provide a way for CPU firmware to interact and synchronize with UDB operation.
- Clock and reset module – This block provides the UDB clocks and reset selection and control.

7.2.1 PLD Module

The primary purpose of the PLD blocks is to implement logic expressions, state machines, sequencers, lookup tables, and decoders. In the simplest use model, consider the PLD blocks as a standalone resource onto which general purpose RTL is synthesized and mapped. The more common and efficient use model is to create digital functions from a combination of PLD and datapath blocks, where the PLD implements only the random logic and state portion of the function while the datapath (ALU) implements the more structured elements.

Figure 7-3. PLD 12C4 Structure

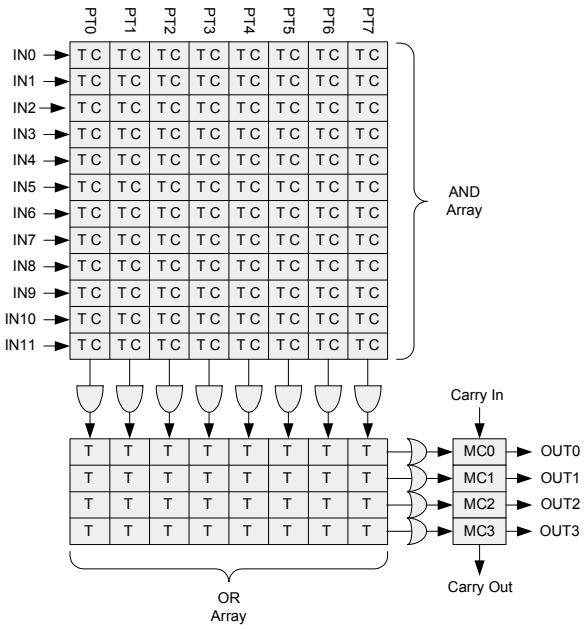

One 12C4 PLD block is shown in Figure 7-3. This PLD has 12 inputs, which feed across eight product terms. Each product term (AND function) can be from 1 to 12 inputs wide, and in a given product term, the true (T) or complement (C) of each input can be selected. The product terms are summed (OR function) to create the PLD outputs. A sum can be from 1 to 8 product terms wide. The 'C' in 12C4 indicates that the width of the OR gate (in this case 8) is constant across all outputs (rather than variable as in a 22V10 device). This PLA like structure gives maximum flexibility and insures that all inputs and outputs are permutable for ease of allocation by the software tools. There are two 12C4 PLDs in each UDB.

7.2.2 Datapath Module

The datapath contains an 8-bit single cycle ALU, with associated compare and condition generation logic. This datapath block is optimized to implement embedded functions, such as timers, counters, integrators, PWMs, PRS, CRC, shifters and dead band generators and many others.

Figure 7-4. Datapath Top Level

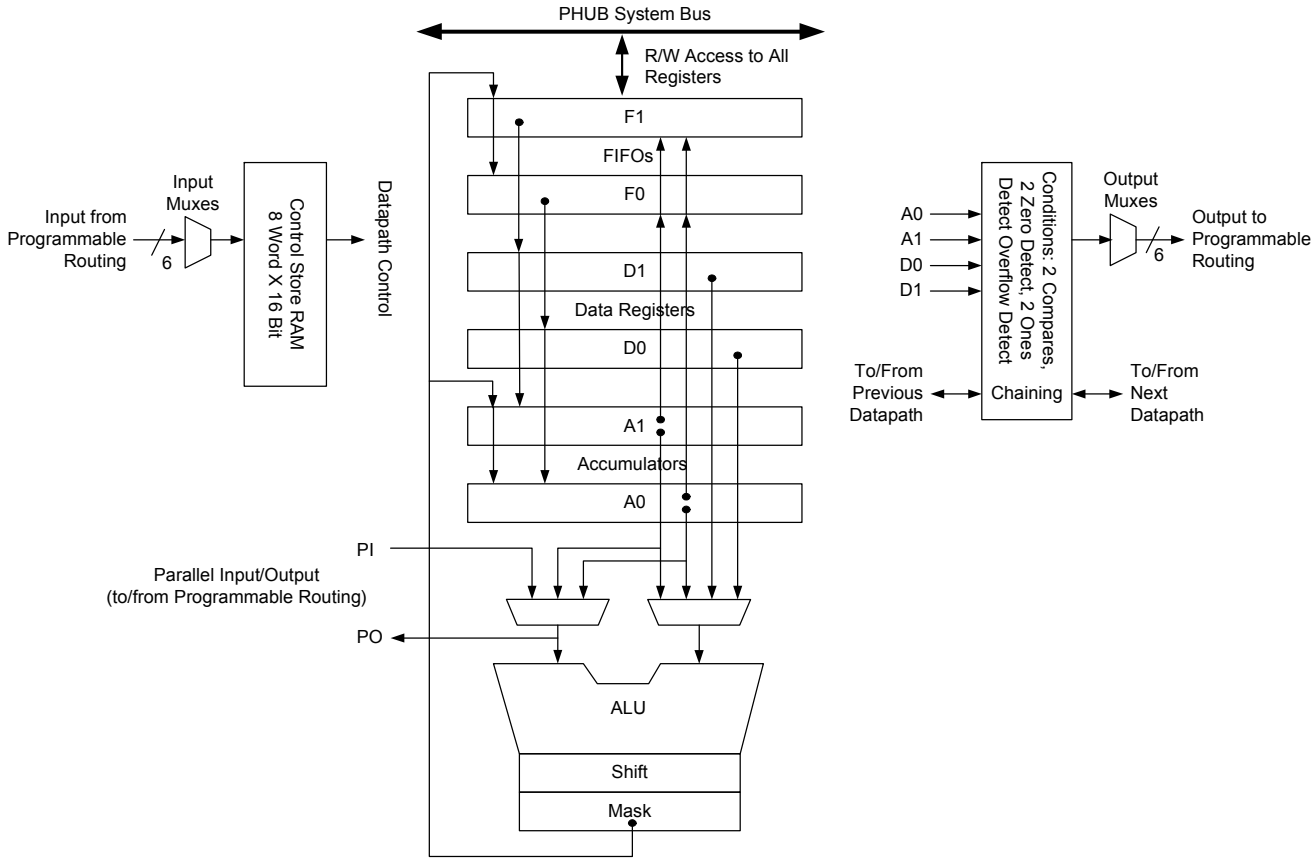

7.2.2.1 Working Registers

The datapath contains six primary working registers, which are accessed by CPU firmware or DMA during normal operation.

Table 7-1. Working Datapath Registers

Name	Function	Description
A0 and A1	Accumulators	These are sources and sinks for the ALU and also sources for the compares.
D0 and D1	Data Registers	These are sources for the ALU and sources for the compares.
F0 and F1	FIFOs	These are the primary interface to the system bus. They can be a data source for the data registers and accumulators or they can capture data from the accumulators or ALU. Each FIFO is four bytes deep.

7.2.2.2 Dynamic Datapath Configuration RAM

Dynamic configuration is the ability to change the datapath function and internal configuration on a cycle-by-cycle basis, under sequencer control. This is implemented using the 8-word × 16-bit configuration RAM, which stores eight unique 16-bit wide configurations. The address input to this RAM controls the sequence, and can be routed from any block connected to the UDB routing matrix, most typically PLD logic, I/O pins, or from the outputs of this or other datapath blocks.

ALU

The ALU performs eight general purpose functions. They are:

- Increment
- Decrement
- Add
- Subtract
- Logical AND
- Logical OR
- Logical XOR
- Pass, used to pass a value through the ALU to the shift register, mask, or another UDB register.

Independent of the ALU operation, these functions are available:

- Shift left
- Shift right
- Nibble swap
- Bitwise OR mask

7.2.2.3 Conditionals

Each datapath has two compares, with bit masking options. Compare operands include the two accumulators and the two data registers in a variety of configurations. Other conditions include zero detect, all ones detect, and overflow. These conditions are the primary datapath outputs, a selection of which can be driven out to the UDB routing matrix. Conditional computation can use the built in chaining to neighboring UDBs to operate on wider data widths without the need to use routing resources.

7.2.2.4 Variable MSB

The most significant bit of an arithmetic and shift function can be programmatically specified. This supports variable width CRC and PRS functions, and in conjunction with ALU output masking, can implement arbitrary width timers, counters and shift blocks.

7.2.2.5 Built in CRC/PRS

The datapath has built-in support for single cycle CRC computation and PRS generation of arbitrary width and arbitrary polynomial. CRC/PRS functions longer than 8 bits may be implemented in conjunction with PLD logic, or built in chaining may be use to extend the function into neighboring UDBs.

7.2.2.6 Input/Output FIFOs

Each datapath contains two four-byte deep FIFOs, which can be independently configured as an input buffer (system bus writes to the FIFO, datapath internal reads the FIFO), or an output buffer (datapath internal writes to the FIFO, the system bus reads from the FIFO). The FIFOs generate status that are selectable as datapath outputs and can therefore be driven to the routing, to interact with sequencers, interrupts, or DMA.

Figure 7-5. Example FIFO Configurations

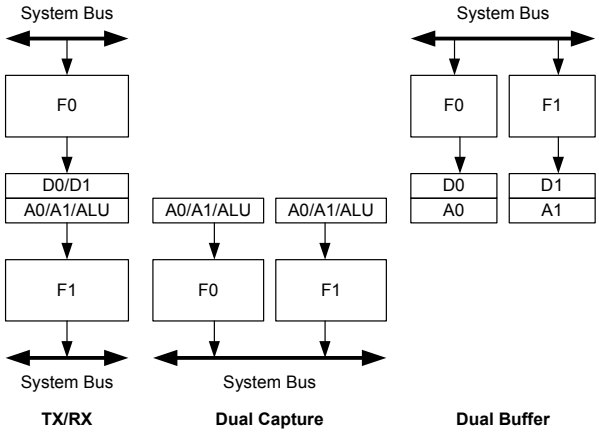

7.2.2.7 Chaining

The datapath can be configured to chain conditions and signals such as carries and shift data with neighboring datapaths to create higher precision arithmetic, shift, CRC/PRS functions.

7.2.2.8 Time Multiplexing

In applications that are over sampled, or do not need high clock rates, the single ALU block in the datapath can be efficiently shared with two sets of registers and condition generators. Carry and shift out data from the ALU are registered and can be selected as inputs in subsequent cycles. This provides support for 16-bit functions in one (8-bit) datapath.

7.2.2.9 Datapath I/O

There are six inputs and six outputs that connect the datapath to the routing matrix. Inputs from the routing provide the configuration for the datapath operation to perform in each cycle, and the serial data inputs. Inputs can be routed from other UDB blocks, other device peripherals, device I/O pins, and so on. The outputs to the routing can be selected from the generated conditions, and the serial data outputs. Outputs can be routed to other UDB blocks, device peripherals, interrupt and DMA controller, I/O pins, and so on.

7.2.3 Status and Control Module

The primary purpose of this circuitry is to coordinate CPU firmware interaction with internal UDB operation.

Figure 7-6. Status and Control Registers

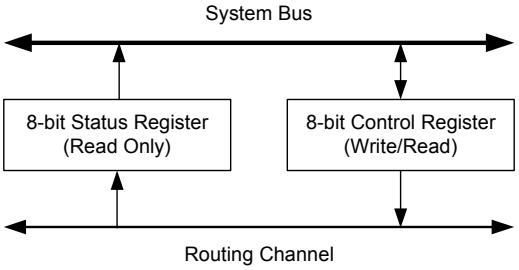

The bits of the control register, which may be written to by the system bus, are used to drive into the routing matrix, and thus provide firmware with the opportunity to control the state of UDB processing. The status register is read-only and it allows internal UDB state to be read out onto the system bus directly from internal routing. This allows firmware to monitor the state of UDB processing. Each bit of these registers has programmable connections to the routing matrix and routing connections are made depending on the requirements of the application.

7.2.3.1 Usage Examples

As an example of control input, a bit in the control register can be allocated as a function enable bit. There are multiple ways to enable a function. In one method the control bit output would be routed to the clock control block in one or more UDBs and serve as a clock enable for the selected UDB blocks. A status example is a case where a PLD or datapath block generated a condition, such as a “compare true” condition that is captured and latched by the status register and then read (and cleared) by CPU firmware.

7.2.3.2 Clock Generation

Each subcomponent block of a UDB including the two PLDs, the datapath, and Status and Control, has a clock selection and control block. This promotes a fine granularity with respect to allocating clocking resources to UDB component blocks and allows unused UDB resources to be used by other functions for maximum system efficiency.

7.3 UDB Array Description

Figure 7-7 shows an example of a 16 UDB array. In addition to the array core, there are a DSI routing interfaces at the top and bottom of the array. Other interfaces that are not explicitly shown include the system interfaces for bus and clock distribution. The UDB array includes multiple horizontal and vertical routing channels each comprised of 96 wires. The wire connections to UDBs, at horizontal/vertical intersection and at the DSI interface are highly permutable providing efficient automatic routing in PSoC Creator. Additionally the routing allows wire by wire segmentation along the vertical and horizontal routing to further increase routing flexibility and capability.

Figure 7-7. Digital System Interface Structure

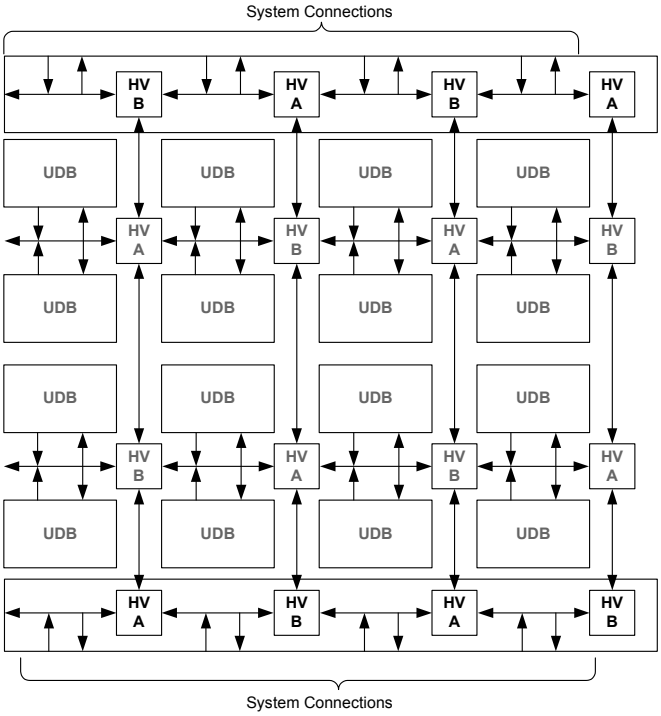

7.3.1 UDB Array Programmable Resources

Figure 7-8 shows an example of how functions are mapped into a bank of 16 UDBs. The primary programmable resources of the UDB are two PLDs, one datapath and one status/control register. These resources are allocated independently, because they have independently selectable clocks, and therefore unused blocks are allocated to other unrelated functions.

An example of this is the 8-bit timer in the upper left corner of the array. This function only requires one datapath in the UDB, and therefore the PLD resources may be allocated to another function. A function such as a Quadrature Decoder may require more PLD logic than one UDB can supply and in this case can utilize the unused PLD blocks in the 8-bit Timer UDB. Programmable resources in the UDB array are generally homogeneous so functions can be mapped to arbitrary boundaries in the array.

Figure 7-8. Function Mapping Example in a Bank of UDBs

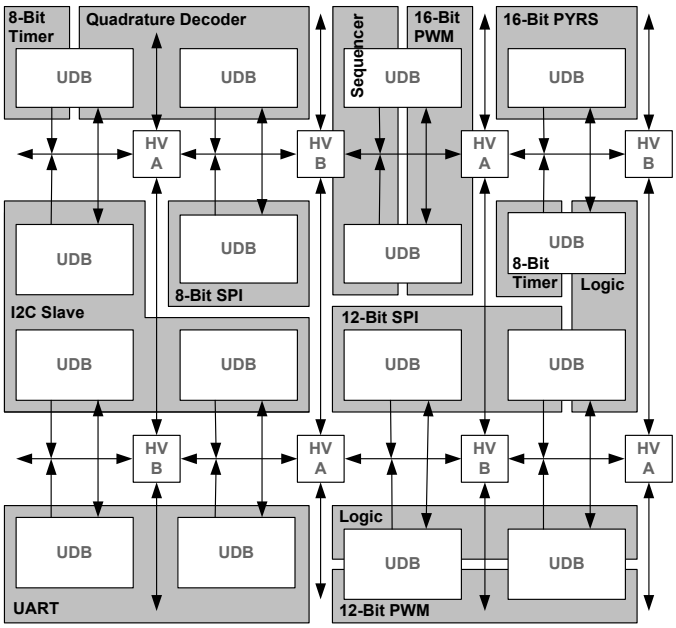

7.4 DSI Routing Interface Description

The DSI routing interface is a continuation of the horizontal and vertical routing channels at the top and bottom of the UDB array core. It provides general purpose programmable routing between device peripherals, including UDBs, I/Os, analog peripherals, interrupts, DMA and fixed function peripherals.

Figure 7-9 illustrates the concept of the digital system interconnect, which connects the UDB array routing matrix with other device peripherals. Any digital core or fixed function peripheral that needs programmable routing is connected to this interface.

Signals in this category include:

- Interrupt requests from all digital peripherals in the system.
- DMA requests from all digital peripherals in the system.
- Digital peripheral data signals that need flexible routing to I/Os.
- Digital peripheral data signals that need connections to UDBs.
- Connections to the interrupt and DMA controllers.
- Connection to I/O pins.
- Connection to analog system digital signals.

Figure 7-9. Digital System Interconnect

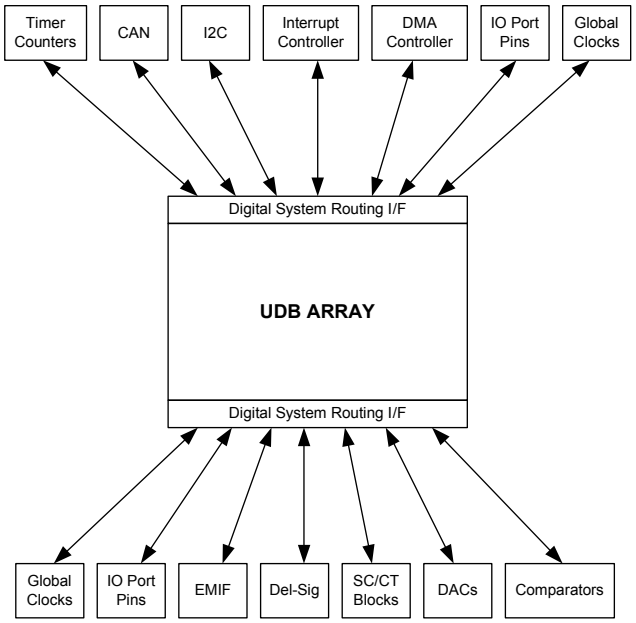

Interrupt and DMA routing is very flexible in the CY8C36 programmable architecture. In addition to the numerous fixed function peripherals that can generate interrupt requests, any data signal in the UDB array routing can also be used to generate a request. A single peripheral may generate multiple independent interrupt requests simplifying system and firmware design. Figure 7-10 shows the structure of the IDMUX (Interrupt/DMA Multiplexer).

Figure 7-10. Interrupt and DMA Processing in the IDMUX

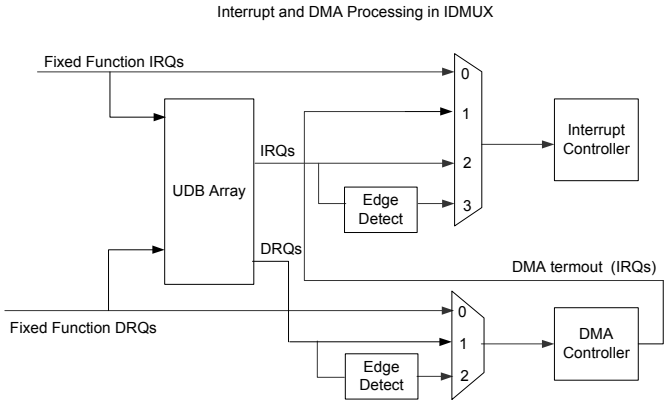

7.4.1 I/O Port Routing

There are a total of 20 DSI routes to a typical 8-bit I/O port, 16 for data and four for drive strength control.

When an I/O pin is connected to the routing, there are two primary connections available, an input and an output. In conjunction with drive strength control, this can implement a bidirectional I/O pin. A data output signal has the option to be single synchronized (pipelined) and a data input signal has the option to be double synchronized. The synchronization clock is the master clock (see Figure 6-1). Normally all inputs from pins are synchronized as this is required if the CPU interacts with the signal or any signal derived from it. Asynchronous inputs have rare uses. An example of this is a feed through of combinational PLD logic from input pins to output pins.

Figure 7-11. I/O Pin Synchronization Routing

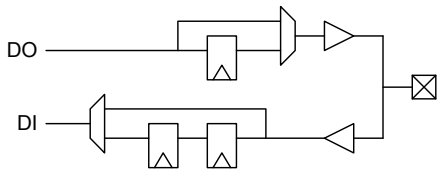

Figure 7-12. I/O Pin Output Connectivity

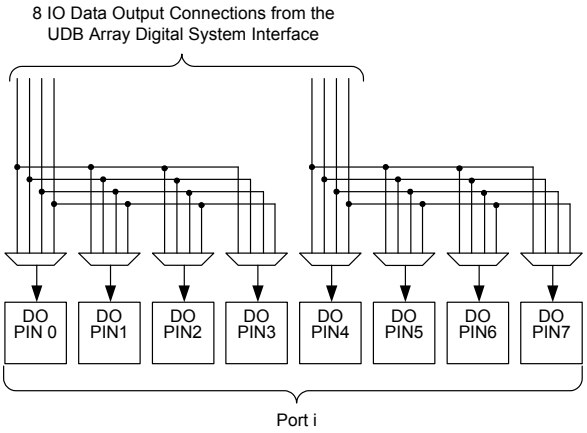

There are four more DSI connections to a given I/O port to implement dynamic output enable control of pins. This connectivity gives a range of options, from fully ganged 8-bits controlled by one signal, to up to four individually controlled pins. The output enable signal is useful for creating tri-state bidirectional pins and buses.

Figure 7-13. I/O Pin Output Enable Connectivity

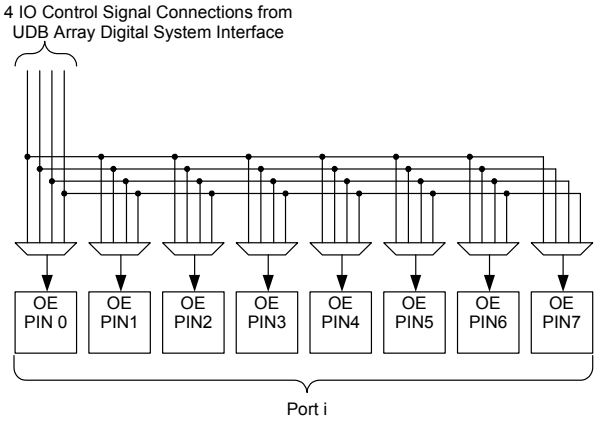

7.5 CAN

The CAN peripheral is a fully functional controller area network (CAN) supporting communication baud rates up to 1 Mbps. The CAN controller implements the CAN2.0A and CAN2.0B specifications as defined in the Bosch specification and conforms to the ISO-11898-1 standard. The CAN protocol was originally designed for automotive applications with a focus on a high level of fault detection. This ensures high communication reliability at a low cost. Because of its success in automotive applications, CAN is used as a standard communication protocol for motion oriented machine control networks (CANOpen) and factory automation applications (DeviceNet). The CAN controller features allow the efficient implementation of higher level protocols without affecting the performance of the microcontroller CPU. Full configuration support is provided in PSoC Creator.

Figure 7-14. CAN Bus System Implementation

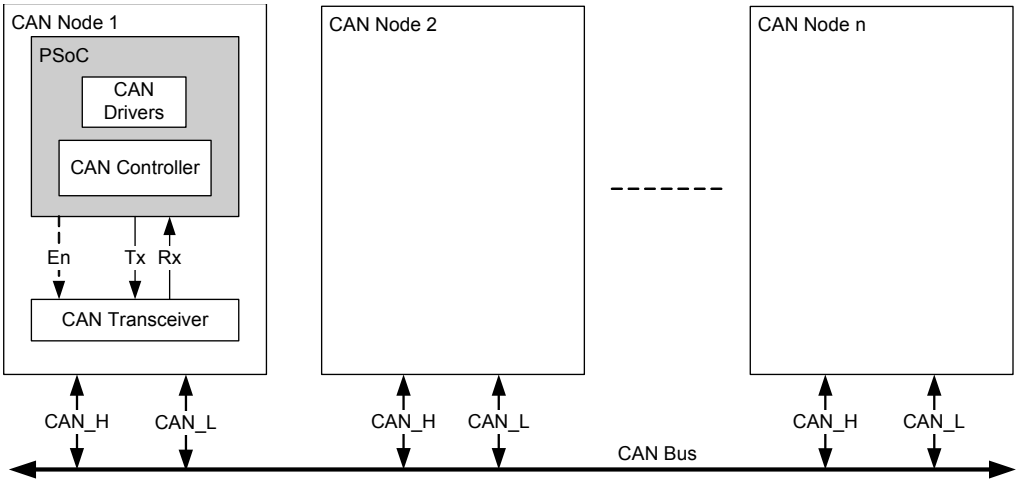

7.5.1 CAN Features

- CAN2.0A/B protocol implementation – ISO 11898 compliant
  - Standard and extended frames with up to 8 bytes of data per frame
  - Message filter capabilities
  - Remote Transmission Request (RTR) support
  - Programmable bit rate up to 1 Mbps
- Listen Only mode
- SW readable error counter and indicator
- Sleep mode: Wake the device from sleep with activity on the Rx pin
- Supports two or three wire interface to external transceiver (Tx, Rx, and Enable). The three-wire interface is compatible with the Philips PHY; the PHY is not included on-chip. The three wires can be routed to any I/O
- Enhanced interrupt controller
  - CAN receive and transmit buffers status
  - CAN controller error status including BusOff
- Receive path
  - 16 receive buffers each with its own message filter
  - Enhanced hardware message filter implementation that covers the ID, IDE, and RTR
  - DeviceNet addressing support
  - Multiple receive buffers linkable to build a larger receive message array
  - Automatic transmission request (RTR) response handler
  - Lost received message notification
- Transmit path
  - Eight transmit buffers
  - Programmable transmit priority
  - Round robin
  - Fixed priority
  - Message transmissions abort capability

7.5.2 Software Tools Support

CAN Controller configuration integrated into PSoC Creator:

- CAN Configuration walkthrough with bit timing analyzer
- Receive filter setup

Figure 7-15. CAN Controller Block Diagram

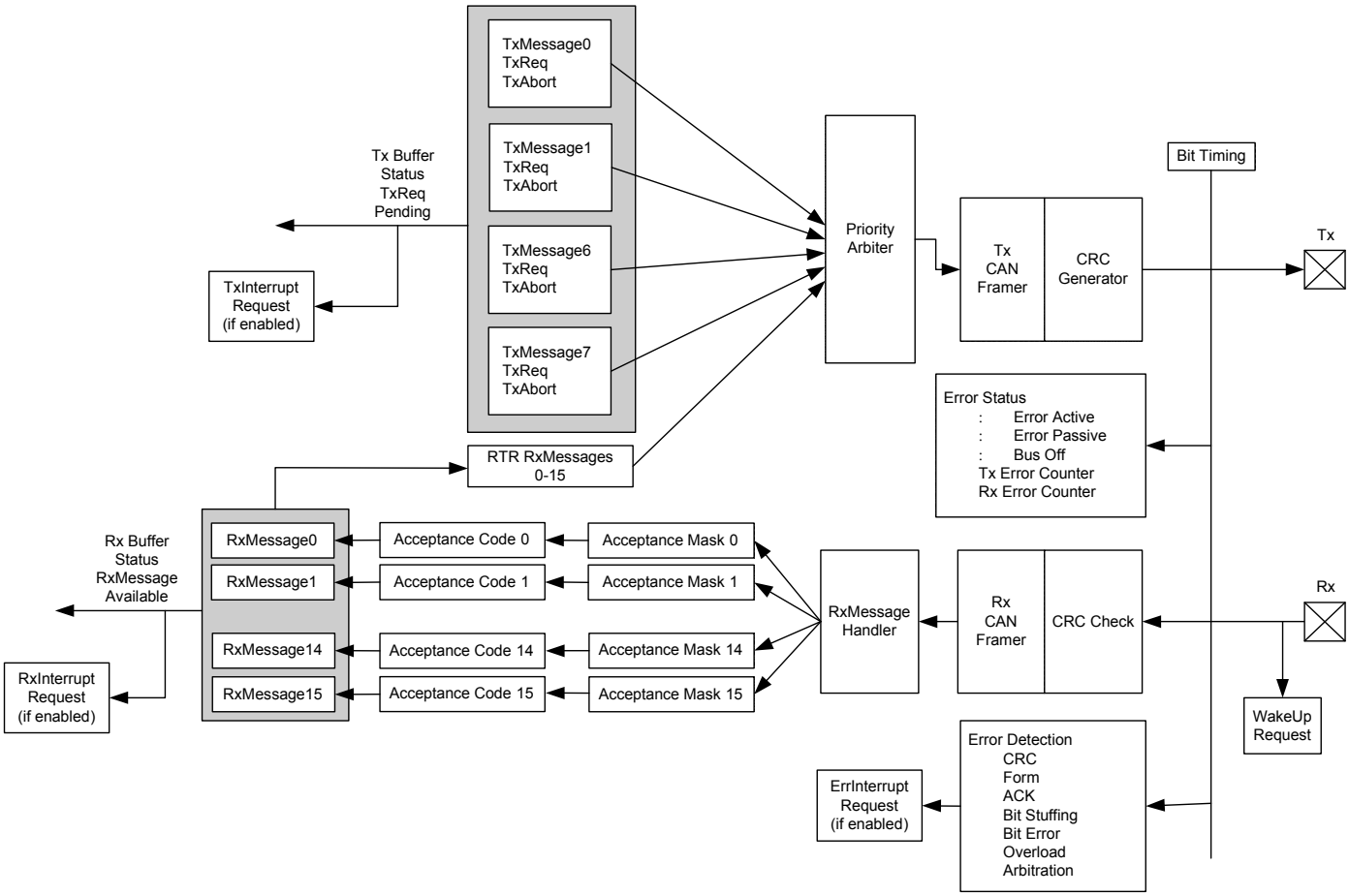

7.6 USB

PSoC includes a dedicated Full-Speed (12 Mbps) USB 2.0 transceiver supporting all four USB transfer types: control, interrupt, bulk, and isochronous. PSoC Creator provides full configuration support. USB interfaces to hosts through two dedicated USBIO pins, which are detailed in the "I/O System and Routing" section on page 33.

USB includes the following features:

- Eight unidirectional data endpoints
- One bidirectional control endpoint 0 (EP0)
- Shared 512-byte buffer for the eight data endpoints
- Dedicated 8-byte buffer for EP0
- Three memory modes
  - Manual memory management with no DMA access
  - Manual memory management with manual DMA access
  - Automatic memory management with automatic DMA access
- Internal 3.3-V regulator for transceiver
- Internal 48-MHz main oscillator mode that auto locks to USB bus clock, requiring no external crystal for USB (USB equipped parts only)
- Interrupts on bus and each endpoint event, with device wakeup
- USB reset, suspend, and resume operations
- Bus-powered and self-powered modes

Figure 7-16. USB

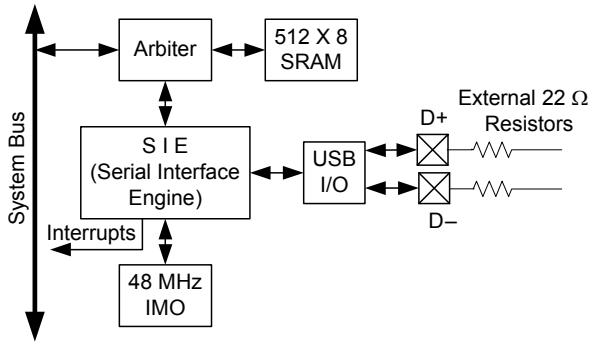

7.7 Timers, Counters, and PWMs

The timer/counter/PWM peripheral is a 16-bit dedicated peripheral providing three of the most common embedded peripheral features. As almost all embedded systems use some combination of timers, counters, and PWMs. Four of them have been included on this PSoC device family. Additional and more advanced functionality timers, counters, and PWMs can also be instantiated in UDBs as required. PSoC Creator allows you to choose the timer, counter, and PWM features that they require. The tool set utilizes the most optimal resources available.

The timer/counter/PWM peripheral can select from multiple clock sources, with input and output signals connected through the DSI routing. DSI routing allows input and output connections to any device pin and any internal digital signal accessible through the DSI. Each of the four instances has a compare output, terminal count output (optional complementary compare output), and programmable interrupt request line. The Timer/Counter/PWMs are configurable as free running, one shot, or Enable input controlled. The peripheral has timer reset and capture inputs, and a kill input for control of the comparator outputs. The peripheral supports full 16-bit capture.

Timer/Counter/PWM features include:

- 16-bit Timer/Counter/PWM (down count only)
- Selectable clock source
- PWM comparator (configurable for LT, LTE, EQ, GTE, GT)
- Period reload on start, reset, and terminal count
- Interrupt on terminal count, compare true, or capture
- Dynamic counter reads
- Timer capture mode
- Count while enable signal is asserted mode
- Free run mode
- One Shot mode (stop at end of period)
- Complementary PWM outputs with deadband
- PWM output kill

Figure 7-17. Timer/Counter/PWM

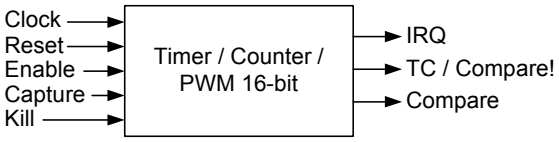

7.8 I²C

The I²C peripheral provides a synchronous two wire interface designed to interface the PSoC device with a two wire I²C serial communication bus. It is compatible[15] with I²C Standard-mode, Fast-mode, and Fast-mode Plus devices as defined in the NXP I2C-bus specification and user manual (UM10204). The I2C bus I/O may be implemented with GPIO or SIO in open-drain modes. Additional I²C interfaces can be instantiated using Universal Digital Blocks (UDBs) in PSoC Creator, as required.

To eliminate the need for excessive CPU intervention and overhead, I²C specific support is provided for status detection and generation of framing bits. I²C operates as a slave, a master, or multimaster (Slave and Master).[16]. In slave mode, the unit always listens for a start condition to begin sending or receiving data. Master mode supplies the ability to generate the Start and Stop conditions and initiate transactions. Multimaster mode provides clock synchronization and arbitration to allow multiple masters on the same bus. If Master mode is enabled and Slave mode is not enabled, the block does not generate interrupts on externally generated Start conditions. I²C interfaces through DSI routing and allows direct connections to any GPIO or SIO pins.

I²C provides hardware address detect of a 7-bit address without CPU intervention. Additionally the device can wake from low-power modes on a 7-bit hardware address match. If wakeup functionality is required, I²C pin connections are limited to the two special sets of SIO pins.

I²C features include:

- Slave and master, transmitter, and receiver operation
- Byte processing for low CPU overhead
- Interrupt or polling CPU interface
- Support for bus speeds up to 1 Mbps
- 7 or 10-bit addressing (10-bit addressing requires firmware support)
- SMBus operation (through firmware support - SMBus supported in hardware in UDBs)
- 7-bit hardware address compare
- Wake from low-power modes on address match
- Glitch filtering (active and alternate-active modes only)

Data transfers follow the format shown in Figure 7-18. After the START condition (S), a slave address is sent. This address is 7 bits long followed by an eighth bit which is a data direction bit (R/W) - a 'zero' indicates a transmission (WRITE), a 'one' indicates a request for data (READ). A data transfer is always terminated by a STOP condition (P) generated by the master.

Figure 7-18. I²C Complete Transfer Timing

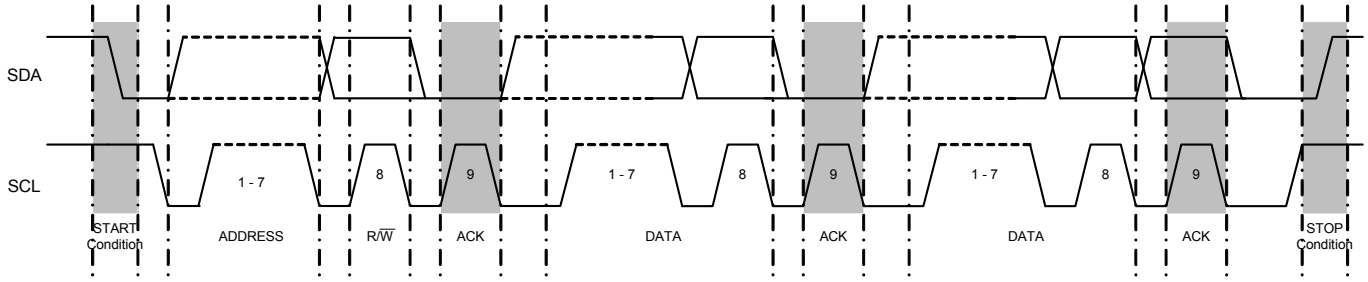

Notes

15. The I²C peripheral is non-compliant with the NXP I²C specification in the following areas: analog glitch filter, I/O V_{OL}/I_{OL}, I/O hysteresis. The I²C Block has a digital glitch filter (not available in sleep mode). The Fast-mode minimum fall-time specification can be met by setting the I/Os to slow speed mode. See the I/O Electrical Specifications in "Inputs and Outputs" section on page 74 for details.
16. Fixed-block I²C does not support undefined bus conditions, nor does it support Repeated Start in Slave mode. These conditions should be avoided, or the UDB-based I²C component should be used instead.

7.9 Digital Filter Block

Some devices in the CY8C36 family of devices have a dedicated HW accelerator block used for digital filtering. The DFB has a dedicated multiplier and accumulator that calculates a 24-bit by 24-bit multiply accumulate in one bus clock cycle. This enables the mapping of a direct form FIR filter that approaches a computation rate of one FIR tap for each clock cycle. The MCU can implement any of the functions performed by this block, but at a slower rate that consumes MCU bandwidth.

The heart of the DFB is a datapath (DP), which is the numerical calculation unit of the DFB. The DP is a 24-bit fixed-point numerical processor containing a 48-bit multiply and accumulate function (MAC), a multi-function ALU, sample and coefficient data RAMs as well as data routing, shifting, holding and rounding functions.

In the MAC, two 24-bit values can be multiplied and the result added to the 48-bit accumulator in each bus clock cycle. The MAC is the only portion of the DP that is wider than 24 bits. All results from the MAC are passed on to the ALU as 24-bit values representing the high-order 24 bits in the accumulator shifted by one (bits 46:23). The MAC assumes an implied binary point after the most significant bit.

The DP also contains an optimized ALU that supports add, subtract, comparison, threshold, absolute value, squelch, saturation, and other functions. The DP unit is controlled by seven control fields totaling 18 bits coming from the DFB Controller. For more information see the TRM.

The PSoC Creator interface provides a wizard to implement FIR and IIR digital filters with coefficients for LPF, BPF, HPF, Notch and arbitrary shape filters. 64 pairs of data and coefficients are stored. This enables a 64 tap FIR filter or up to 4 16 tap filters of either FIR or IIR formulation.

Figure 7-19. DFB Application Diagram (pwr/gnd not shown)

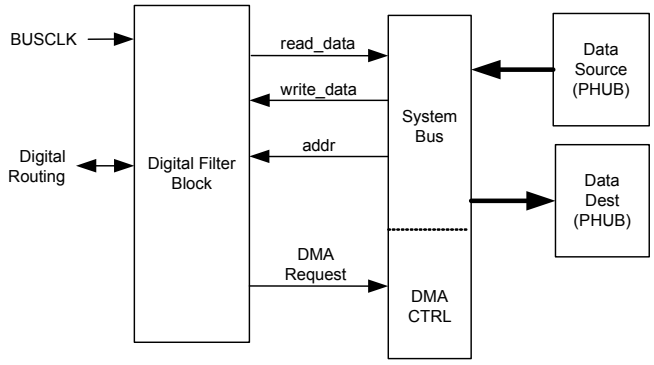

The typical use model is for data to be supplied to the DFB over the system bus from another on-chip system data source such as an ADC. The data typically passes through main memory or is directly transferred from another chip resource through DMA. The DFB processes this data and passes the result to another on chip resource such as a DAC or main memory through DMA on the system bus.

Data movement in or out of the DFB is typically controlled by the system DMA controller but can be moved directly by the MCU.

8. Analog Subsystem

The analog programmable system creates application specific combinations of both standard and advanced analog signal processing blocks. These blocks are then interconnected to each other and also to any pin on the device, providing a high level of design flexibility and IP security. The features of the analog subsystem are outlined here to provide an overview of capabilities and architecture.

- Flexible, configurable analog routing architecture provided by analog globals, analog mux bus, and analog local buses.
- High resolution delta-sigma ADC.
- Up to four 8-bit DACs that provide either voltage or current output.
- Four comparators with optional connection to configurable LUT outputs.
- Up to four configurable switched capacitor/continuous time (SC/CT) blocks for functions that include opamp, unity gain buffer, programmable gain amplifier, transimpedance amplifier, and mixer.
- Up to four opamps for internal use and connection to GPIO that can be used as high current output buffers.
- CapSense subsystem to enable capacitive touch sensing.
- Precision reference for generating an accurate analog voltage for internal analog blocks.

Figure 8-1. Analog Subsystem Block Diagram

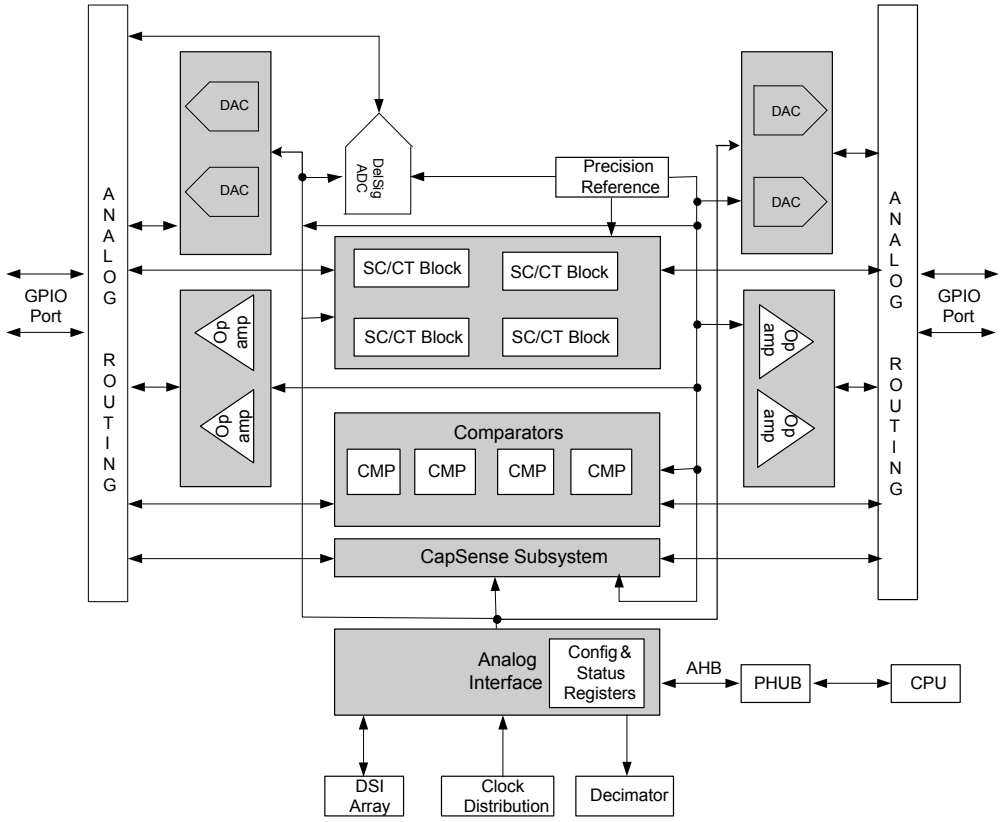

The PSoC Creator software program provides a user friendly interface to configure the analog connections between the GPIO and various analog resources and connections from one analog resource to another. PSoC Creator also provides component libraries that allow you to configure the various analog blocks to perform application specific functions (PGA, transimpedance amplifier, voltage DAC, current DAC, and so on). The tool also generates API interface libraries that allow you to write firmware that allows the communication between the analog peripheral and CPU/Memory.

8.1 Analog Routing

The CY8C36 family of devices has a flexible analog routing architecture that provides the capability to connect GPIOs and different analog blocks, and also route signals between different analog blocks. One of the strong points of this flexible routing architecture is that it allows dynamic routing of input and output connections to the different analog blocks.

For information on how to make pin selections for optimal analog routing, refer to the application note, AN58304 - PSoC® 3 and PSoC® 5 - Pin Selection for Analog Designs.

8.1.1 Features

- Flexible, configurable analog routing architecture
- 16 analog globals (AG) and two analog mux buses (AMUXBUS) to connect GPIOs and the analog blocks
- Each GPIO is connected to one analog global and one analog mux bus
- Eight analog local buses (abus) to route signals between the different analog blocks
- Multiplexers and switches for input and output selection of the analog blocks

8.1.2 Functional Description

Analog globals (AGs) and analog mux buses (AMUXBUS) provide analog connectivity between GPIOs and the various analog blocks. There are 16 AGs in the CY8C36 family. The analog routing architecture is divided into four quadrants as shown in Figure 8-2. Each quadrant has four analog globals (AGL[0..3], AGL[4..7], AGR[0..3], AGR[4..7]). Each GPIO is connected to the corresponding AG through an analog switch. The analog mux bus is a shared routing resource that connects to every GPIO through an analog switch. There are two AMUXBUS routes in CY8C36, one in the left half (AMUXBUSL) and one in the right half (AMUXBUSR), as shown in Figure 8-2 on page 53.

Figure 8-2. CY8C36 Analog Interconnect

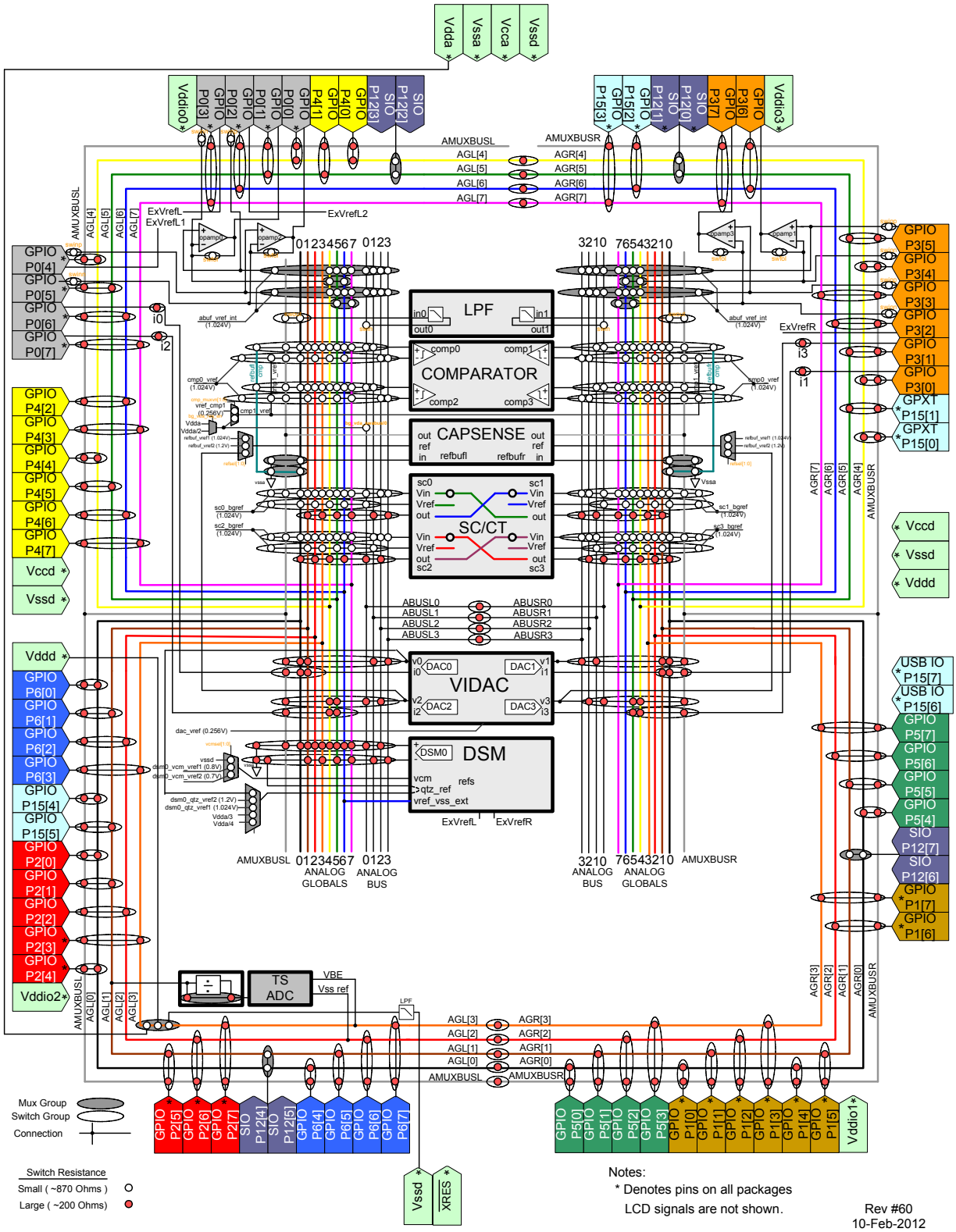

To preserve detail of this figure, this figure is best viewed with a PDF display program or printed on a 11" × 17" paper.

Analog local buses (abus) are routing resources located within the analog subsystem and are used to route signals between different analog blocks. There are eight abus routes in CY8C36, four in the left half (abusl [0:3]) and four in the right half (abusr [0:3]) as shown in Figure 8-2. Using the abus saves the analog globals and analog mux buses from being used for interconnecting the analog blocks.

Multiplexers and switches exist on the various buses to direct signals into and out of the analog blocks. A multiplexer can have only one connection on at a time, whereas a switch can have multiple connections on simultaneously. In Figure 8-2, multiplexers are indicated by grayed ovals and switches are indicated by transparent ovals.

8.2 Delta-sigma ADC

The CY8C36 device contains one delta-sigma ADC. This ADC offers differential input, high resolution and excellent linearity, making it a good ADC choice for both audio signal processing and measurement applications. The converter can be configured to output 12-bit resolution at data rates of up to 192 ksps. At a fixed clock rate, resolution can be traded for faster data rates as shown in Table 8-1 and Figure 8-3.

Table 8-1. Delta-sigma ADC Performance

Bits	Maximum Sample Rate (sps)	SINAD (dB)
12	192 k	66
8	384 k	43

Figure 8-3. Delta-sigma ADC Sample Rates, Range = ±1.024 V

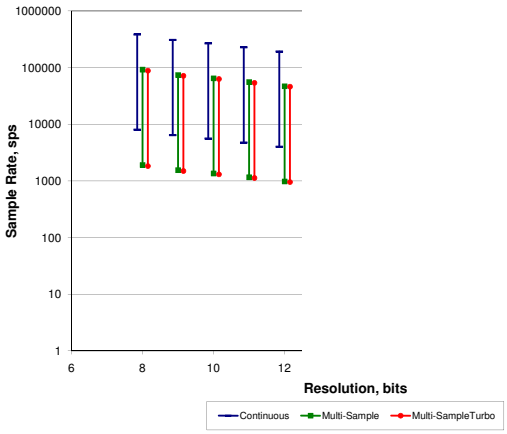

8.2.1 Functional Description

The ADC connects and configures three basic components, input buffer, delta-sigma modulator, and decimator. The basic block diagram is shown in Figure 8-4. The signal from the input muxes is delivered to the delta-sigma modulator either directly or through the input buffer. The delta-sigma modulator performs the actual analog to digital conversion. The modulator over-samples the input and generates a serial data stream output. This high speed data stream is not useful for most applications without some type of post processing, and so is passed to the decimator through the Analog Interface block. The decimator converts the high speed serial data stream into parallel ADC results. The modulator/decimator frequency response is $[(\sin x)/x]^4$.

Figure 8-4. Delta-sigma ADC Block Diagram

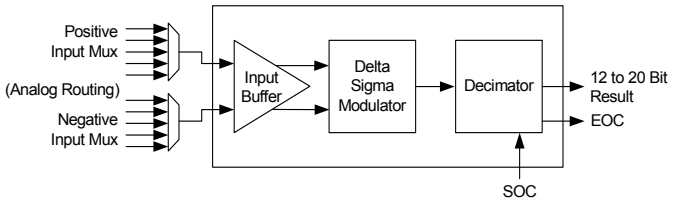

Resolution and sample rate are controlled by the Decimator. Data is pipelined in the decimator; the output is a function of the last four samples. When the input multiplexer is switched, the output data is not valid until after the fourth sample after the switch.

8.2.2 Operational Modes

The ADC can be configured by the user to operate in one of four modes: Single Sample, Multi Sample, Continuous, or Multi Sample (Turbo). All four modes are started by either a write to the start bit in a control register or an assertion of the Start of Conversion (SoC) signal. When the conversion is complete, a status bit is set and the output signal End of Conversion (EoC) asserts high and remains high until the value is read by either the DMA controller or the CPU.

8.2.2.1 Single Sample

In Single Sample mode, the ADC performs one sample conversion on a trigger. In this mode, the ADC stays in standby state waiting for the SoC signal to be asserted. When SoC is signaled the ADC performs four successive conversions. The first three conversions prime the decimator. The ADC result is valid and available after the fourth conversion, at which time the EoC signal is generated. To detect the end of conversion, the system may poll a control register for status or configure the external EoC signal to generate an interrupt or invoke a DMA request. When the transfer is done the ADC reenters the standby state where it stays until another SoC event.

8.2.2.2 Continuous

Continuous sample mode is used to take multiple successive samples of a single input signal. Multiplexing multiple inputs should not be done with this mode. There is a latency of three conversion times before the first conversion result is available. This is the time required to prime the decimator. After the first result, successive conversions are available at the selected sample rate.

8.2.2.3 Multi Sample

Multi sample mode is similar to continuous mode except that the ADC is reset between samples. This mode is useful when the input is switched between multiple signals. The decimator is re-primed between each sample so that previous samples do not affect the current conversion. Upon completion of a sample, the next sample is automatically initiated. The results can be transferred using either firmware polling, interrupt, or DMA.

8.2.3 Start of Conversion Input

The SoC signal is used to start an ADC conversion. A digital clock or UDB output can be used to drive this input. It can be used when the sampling period must be longer than the ADC conversion time or when the ADC must be synchronized to other hardware. This signal is optional and does not need to be connected if ADC is running in a continuous mode.

8.2.4 End of Conversion Output

The EoC signal goes high at the end of each ADC conversion. This signal may be used to trigger either an interrupt or DMA request.

8.3 Comparators

The CY8C36 family of devices contains four comparators in a device. Comparators have these features:

- Input offset factory trimmed to less than 5 mV
- Rail-to-rail common mode input range (VSSA to VDDA)
- Speed and power can be traded off by using one of three modes: fast, slow, or ultra low-power
- Comparator outputs can be routed to lookup tables to perform simple logic functions and then can also be routed to digital blocks
- The positive input of the comparators may be optionally passed through a low pass filter. Two filters are provided
- Comparator inputs can be connections to GPIO, DAC outputs and SC block outputs

8.3.1 Input and Output Interface

The positive and negative inputs to the comparators come from the analog global buses, the analog mux line, the analog local bus and precision reference through multiplexers. The output from each comparator could be routed to any of the two input LUTs. The output of that LUT is routed to the UDB DSI.

Figure 8-5. Analog Comparator

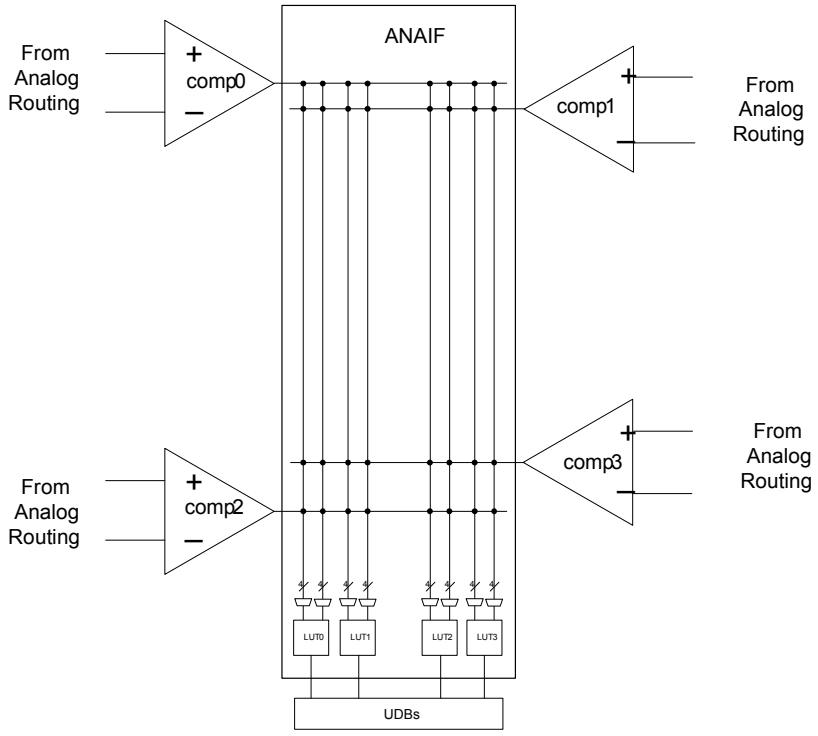

8.3.2 LUT

The CY8C36 family of devices contains four LUTs. The LUT is a two input, one output lookup table that is driven by any one or two of the comparators in the chip. The output of any LUT is routed to the digital system interface of the UDB array. From the digital system interface of the UDB array, these signals can be connected to UDBs, DMA controller, I/O, or the interrupt controller.

The LUT control word written to a register sets the logic function on the output. The available LUT functions and the associated control word is shown in Table 8-2.

Table 8-2. LUT Function vs. Program Word and Inputs

Control Word	Output (A and B are LUT inputs)
0000b	**FALSE** (‘0’)
0001b	**A** AND **B**
0010b	**A** AND (NOT **B**)
0011b	A
0100b	(NOT **A**) AND **B**
0101b	B
0110b	**A** XOR **B**
0111b	**A** OR **B**
1000b	**A** NOR **B**
1001b	**A** XNOR **B**
1010b	NOT **B**
1011b	**A** OR (NOT **B**)
1100b	NOT **A**
1101b	(NOT **A**) OR **B**
1110b	**A** NAND **B**
1111b	**TRUE** (‘1’)

8.4 Opamps

The CY8C36 family of devices contain up to four general purpose opamps in a device.

Figure 8-6. Opamp

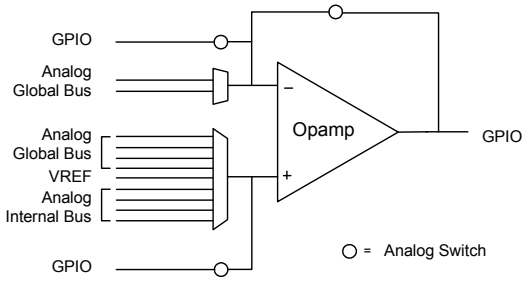

The opamp is uncommitted and can be configured as a gain stage or voltage follower, or output buffer on external or internal signals.

See Figure 8-7. In any configuration, the input and output signals can all be connected to the internal global signals and monitored with an ADC, or comparator. The configurations are implemented with switches between the signals and GPIO pins.

Figure 8-7. Opamp Configurations

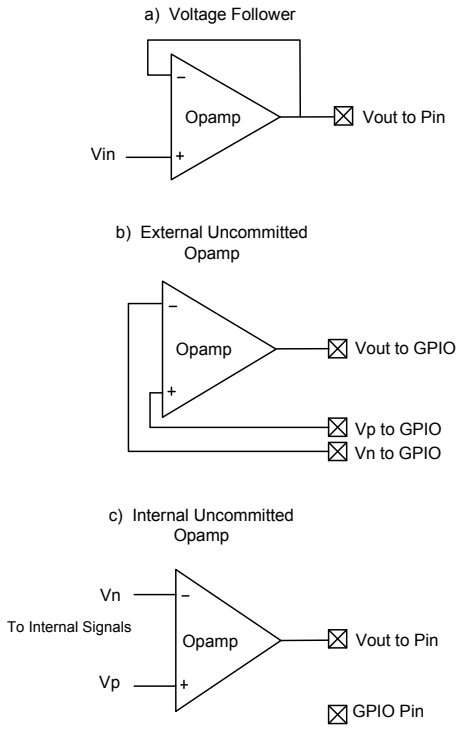

The opamp has three speed modes, slow, medium, and fast. The slow mode consumes the least amount of quiescent power and the fast mode consumes the most power. The inputs are able to swing rail-to-rail. The output swing is capable of rail-to-rail operation at low current output, within 50 mV of the rails. When driving high current loads (about 25 mA) the output voltage may only get within 500 mV of the rails.

8.5 Programmable SC/CT Blocks

The CY8C36 family of devices contains up to four switched capacitor/continuous time (SC/CT) blocks in a device. Each switched capacitor/continuous time block is built around a single rail-to-rail high bandwidth opamp.

Switched capacitor is a circuit design technique that uses capacitors plus switches instead of resistors to create analog functions. These circuits work by moving charge between capacitors by opening and closing different switches. Nonoverlapping in phase clock signals control the switches, so that not all switches are ON simultaneously.

The PSoC Creator tool offers a user friendly interface, which allows you to easily program the SC/CT blocks. Switch control and clock phase control configuration is done by PSoC Creator so users only need to determine the application use parameters such as gain, amplifier polarity, V_{REF} connection, and so on.

The same opamps and block interfaces are also connectable to an array of resistors which allows the construction of a variety of continuous time functions.

The opamp and resistor array is programmable to perform various analog functions including

- Naked operational amplifier – Continuous mode
- Unity-gain buffer – Continuous mode
- PGA – Continuous mode
- Transimpedance amplifier (TIA) – Continuous mode
- Up/down mixer – Continuous mode
- Sample and hold mixer (NRZ S/H) – Switched cap mode
- First order analog to digital modulator – Switched cap mode

8.5.1 Naked Opamp

The Naked Opamp presents both inputs and the output for connection to internal or external signals. The opamp has a unity gain bandwidth greater than 6.0 MHz and output drive current up to 650 µA. This is sufficient for buffering internal signals (such as DAC outputs) and driving external loads greater than 7.5 kohms.

8.5.2 Unity Gain

The Unity Gain buffer is a Naked Opamp with the output directly connected to the inverting input for a gain of 1.00. It has a –3 dB bandwidth greater than 6.0 MHz.

8.5.3 PGA

The PGA amplifies an external or internal signal. The PGA can be configured to operate in inverting mode or noninverting mode. The PGA function may be configured for both positive and negative gains as high as 50 and 49 respectively. The gain is adjusted by changing the values of R1 and R2 as illustrated in Figure 8-8. The schematic in Figure 8-8 shows the configuration and possible resistor settings for the PGA. The gain is switched from inverting and non inverting by changing the shared select value of the both the input muxes. The bandwidth for each gain case is listed in Table 8-3.

Table 8-3. Bandwidth

Gain	Bandwidth
1	5.5 MHz
24	340 kHz
48	220 kHz
50	215 kHz

Figure 8-8. PGA Resistor Settings

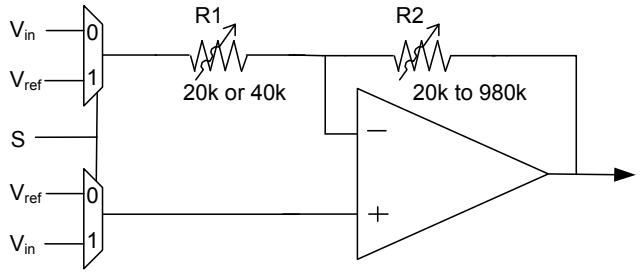

The PGA is used in applications where the input signal may not be large enough to achieve the desired resolution in the ADC, or dynamic range of another SC/CT block such as a mixer. The gain is adjustable at runtime, including changing the gain of the PGA prior to each ADC sample.

8.5.4 TIA

The Transimpedance Amplifier (TIA) converts an internal or external current to an output voltage. The TIA uses an internal feedback resistor in a continuous time configuration to convert input current to output voltage. For an input current I_{in}, the output voltage is V_{REF} - I_{in} x R_{fb}, where V_{REF} is the value placed on the non inverting input. The feedback resistor Rfb is programmable between 20 KΩ and 1 MΩ through a configuration register. Table 8-4 shows the possible values of Rfb and associated configuration settings.

Table 8-4. Feedback Resistor Settings

Configuration Word	Nominal R_{fb} (KΩ)
000b	20
001b	30
010b	40
011b	60
100b	120
101b	250
110b	500
111b	1000

Figure 8-9. Continuous Time TIA Schematic

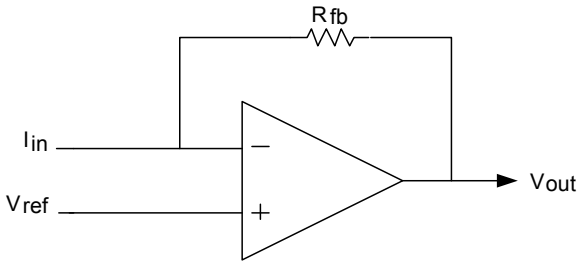

The TIA configuration is used for applications where an external sensor's output is current as a function of some type of stimulus such as temperature, light, magnetic flux etc. In a common application, the voltage DAC output can be connected to the V_{REF} TIA input to allow calibration of the external sensor bias current by adjusting the voltage DAC output voltage.

8.6 LCD Direct Drive

The PSoC LCD driver system is a highly configurable peripheral designed to allow PSoC to directly drive a broad range of LCD glass. All voltages are generated on chip, eliminating the need for external components. With a high multiplex ratio of up to 1/16, the CY8C36 family LCD driver system can drive a maximum of 736 segments. The PSoC LCD driver module was also designed with the conservative power budget of portable devices in mind, enabling different LCD drive modes and power down modes to conserve power.

PSoC Creator provides an LCD segment drive component. The component wizard provides easy and flexible configuration of LCD resources. You can specify pins for segments and commons along with other options. The software configures the device to meet the required specifications. This is possible because of the programmability inherent to PSoC devices.

Key features of the PSoC LCD segment system are:

- LCD panel direct driving
- Type A (standard) and Type B (low-power) waveform support
- Wide operating voltage range support (2 V to 5 V) for LCD panels
- Static, 1/2, 1/3, 1/4, 1/5 bias voltage levels
- Internal bias voltage generation through internal resistor ladder
- Up to 62 total common and segment outputs
- Up to 1/16 multiplex for a maximum of 16 backplane/common outputs
- Up to 62 front plane/segment outputs for direct drive
- Drives up to 736 total segments (16 backplane × 46 front plane)
- Up to 64 levels of software controlled contrast
- Ability to move display data from memory buffer to LCD driver through DMA (without CPU intervention)
- Adjustable LCD refresh rate from 10 Hz to 150 Hz
- Ability to invert LCD display for negative image
- Three LCD driver drive modes, allowing power optimization

Figure 8-10. LCD System

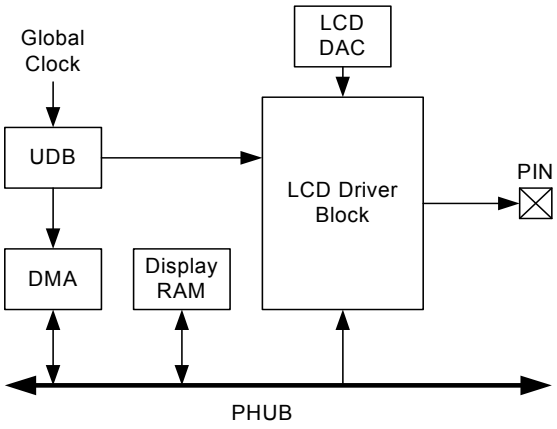

8.6.1 LCD Segment Pin Driver

Each GPIO pin contains an LCD driver circuit. The LCD driver buffers the appropriate output of the LCD DAC to directly drive the glass of the LCD. A register setting determines whether the pin is a common or segment. The pin's LCD driver then selects one of the six bias voltages to drive the I/O pin, as appropriate for the display data.

8.6.2 Display Data Flow

The LCD segment driver system reads display data and generates the proper output voltages to the LCD glass to produce the desired image. Display data resides in a memory buffer in the system SRAM. Each time you need to change the common and segment driver voltages, the next set of pixel data moves from the memory buffer into the Port Data Registers through the DMA.

8.6.3 UDB and LCD Segment Control

A UDB is configured to generate the global LCD control signals and clocking. This set of signals is routed to each LCD pin driver through a set of dedicated LCD global routing channels. In addition to generating the global LCD control signals, the UDB also produces a DMA request to initiate the transfer of the next frame of LCD data.

8.6.4 LCD DAC

The LCD DAC generates the contrast control and bias voltage for the LCD system. The LCD DAC produces up to five LCD drive voltages plus ground, based on the selected bias ratio. The bias voltages are driven out to GPIO pins on a dedicated LCD bias bus, as required.

8.7 CapSense

The CapSense system provides a versatile and efficient means for measuring capacitance in applications such as touch sense buttons, sliders, proximity detection, etc. The CapSense system uses a configuration of system resources, including a few hardware functions primarily targeted for CapSense. Specific resource usage is detailed in the CapSense component in PSoC Creator.

A capacitive sensing method using a Delta-sigma Modulator (CSD) is used. It provides capacitance sensing using a switched capacitor technique with a delta-sigma modulator to convert the sensing current to a digital code.

8.8 Temp Sensor

Die temperature is used to establish programming parameters for writing flash. Die temperature is measured using a dedicated sensor based on a forward biased transistor. The temperature sensor has its own auxiliary ADC.

8.9 DAC

The CY8C36 parts contain up to four Digital to Analog Convertors (DACs). Each DAC is 8-bit and can be configured for either voltage or current output. The DACs support CapSense, power supply regulation, and waveform generation. Each DAC has the following features:

- Adjustable voltage or current output in 255 steps
- Programmable step size (range selection)
- Eight bits of calibration to correct ± 25 percent of gain error
- Source and sink option for current output
- High and low speed / power modes
- 8 Msps conversion rate for current output
- 1 Msps conversion rate for voltage output
- Monotonic in nature
- Data and strobe inputs can be provided by the CPU or DMA, or routed directly from the DSI
- Dedicated low-resistance output pin for high-current mode

Figure 8-11. DAC Block Diagram

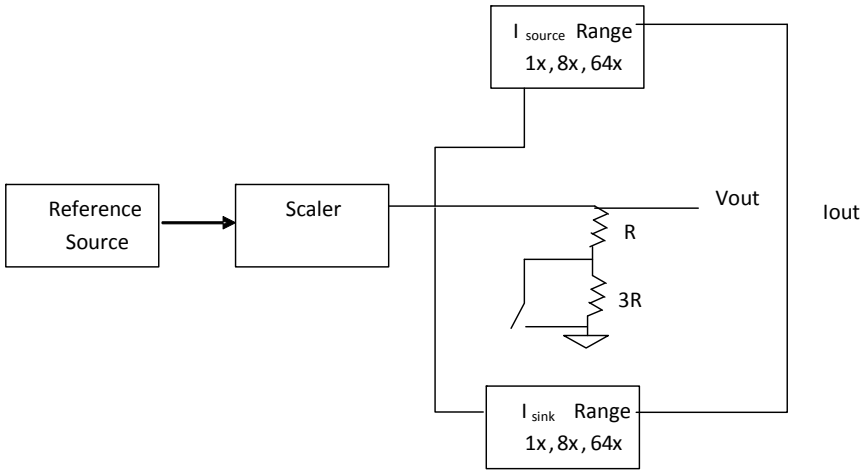

8.9.1 Current DAC

The current DAC (IDAC) can be configured for the ranges 0 to 31.875 µA, 0 to 255 µA, and 0 to 2.04 mA. The IDAC can be configured to source or sink current.

8.9.2 Voltage DAC

For the voltage DAC (VDAC), the current DAC output is routed through resistors. The two ranges available for the VDAC are 0 to 1.02 V and 0 to 4.08 V. In voltage mode any load connected to the output of a DAC should be purely capacitive (the output of the VDAC is not buffered).

8.10 Up/Down Mixer

In continuous time mode, the SC/CT block components are used to build an up or down mixer. Any mixing application contains an input signal frequency and a local oscillator frequency. The polarity of the clock, Fclk, switches the amplifier between inverting or noninverting gain. The output is the product of the input and the switching function from the local oscillator, with frequency components at the local oscillator plus and minus the signal frequency (Fclk + Fin and Fclk – Fin) and reduced-level frequency components at odd integer multiples of the local oscillator frequency. The local oscillator frequency is provided by the selected clock source for the mixer.

Continuous time up and down mixing works for applications with input signals and local oscillator frequencies up to 1 MHz.

Figure 8-12. Mixer Configuration

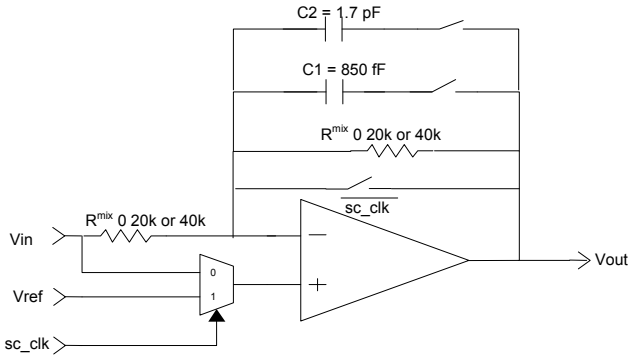

8.11 Sample and Hold

The main application for a sample and hold, is to hold a value stable while an ADC is performing a conversion. Some applications require multiple signals to be sampled simultaneously, such as for power calculations (V and I).

Figure 8-13. Sample and Hold Topology (Φ1 and Φ2 are opposite phases of a clock)

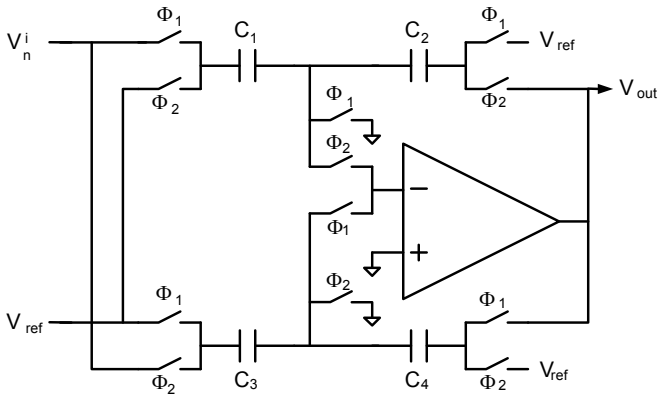

8.11.1 Down Mixer

The SC/CT block can be used as a mixer to down convert an input signal. This circuit is a high bandwidth passive sample network that can sample input signals up to 14 MHz. This sampled value is then held using the opamp with a maximum clock rate of 4 MHz. The output frequency is at the difference between the input frequency and the highest integer multiple of the Local Oscillator that is less than the input.

8.11.2 First Order Modulator – SC Mode

A first order modulator is constructed by placing the SC/CT block in an integrator mode and using a comparator to provide a 1-bit feedback to the input. Depending on this bit, a reference voltage is either subtracted or added to the input signal. The block output is the output of the comparator and not the integrator in the modulator case. The signal is downshifted and buffered and then processed by a decimator to make a delta-sigma converter or a counter to make an incremental converter. The accuracy of the sampled data from the first-order modulator is determined from several factors.

The main application for this modulator is for a low-frequency ADC with high accuracy. Applications include strain gauges, thermocouples, precision voltage, and current measurement.

9. Programming, Debug Interfaces, Resources

PSoC devices include extensive support for programming, testing, debugging, and tracing both hardware and firmware. Three interfaces are available: JTAG, SWD, and SWV. JTAG and SWD support all programming and debug features of the device. JTAG also supports standard JTAG scan chains for board level test and chaining multiple JTAG devices to a single JTAG connection.

For more information on PSoC 3 Programming, refer to the PSoC® 3 Device Programming Specifications.

Complete Debug on Chip (DoC) functionality enables full device debugging in the final system using the standard production device. It does not require special interfaces, debugging pods, simulators, or emulators. Only the standard programming connections are required to fully support debug.

The PSoC Creator IDE software provides fully integrated programming and debug support for PSoC devices. The low cost MiniProg3 programmer and debugger is designed to provide full programming and debug support of PSoC devices in conjunction with the PSoC Creator IDE. PSoC JTAG, SWD, and SWV interfaces are fully compatible with industry standard third party tools.

All DOC circuits are disabled by default and can only be enabled in firmware. If not enabled, the only way to reenable them is to erase the entire device, clear flash protection, and reprogram the device with new firmware that enables DOC. Disabling DOC features, robust flash protection, and hiding custom analog and digital functionality inside the PSoC device provide a level of security not possible with multichip application solutions. Additionally, all device interfaces can be permanently disabled (Device Security) for applications concerned about phishing attacks due to a maliciously reprogrammed device. Permanently disabling interfaces is not recommended in most applications because you cannot access the device later. Because all programming, debug, and test interfaces are disabled when device security is enabled, PSoCs with Device Security enabled may not be returned for failure analysis.

Table 9-1. Debug Configurations

Debug and Trace Configuration	GPIO Pins Used
All debug and trace disabled	0
JTAG	4 or 5
SWD	2
SWV	1
SWD + SWV	3

9.1 JTAG Interface

The IEEE 1149.1 compliant JTAG interface exists on four or five pins (the nTRST pin is optional). The JTAG interface is used for programming the flash memory, debugging, I/O scan chains, and JTAG device chaining.

PSoC 3 has certain timing requirements to be met for entering programming mode through the JTAG interface. Due to these timing requirements, not all standard JTAG programmers, or standard JTAG file formats such as SVF or STAPL, can support PSoC 3 programming. The list of programmers that support PSoC 3 programming is available at http://www.cypress.com/go/programming.

The JTAG clock frequency can be up to 14 MHz, or 1/3 of the CPU clock frequency for 8 and 16-bit transfers, or 1/5 of the CPU clock frequency for 32-bit transfers. By default, the JTAG pins are enabled on new devices but the JTAG interface can be disabled, allowing these pins to be used as GPIO instead.

Figure 9-1. JTAG Interface Connections between PSoC 3 and Programmer

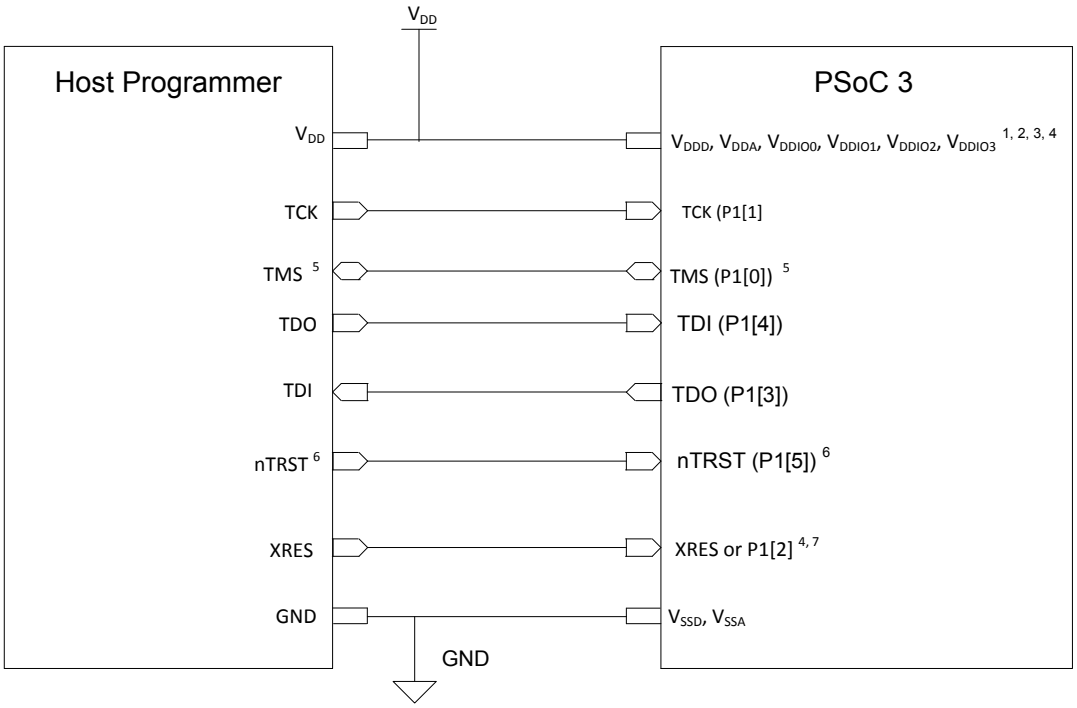

[1] The voltage levels of Host Programmer and the PSoC 3 voltage domains involved in Programming should be same. The Port 1 JTAG pins, XRES pin (XRES_N or P1[2]) are powered by V_{DDIO1}. So, V_{DDIO1} of PSoC 3 should be at same voltage level as host V_{DD}. Rest of PSoC 3 voltage domains (V_{DDD}, V_{DDA}, V_{DDIO0}, V_{DDIO2}, V_{DDIO3}) need not be at the same voltage level as host Programmer.

[2] Vdda must be greater than or equal to all other power supplies (Vddd, Vddio's) in PSoC 3.

[3] For Power cycle mode Programming, XRES pin is not required. But the Host programmer must have the capability to toggle power (Vddd, Vdda, All Vddio's) to PSoC 3. This may typically require external interface circuitry to toggle power which will depend on the programming setup. The power supplies can be brought up in any sequence, however, once stable, VDDA must be greater than or equal to all other supplies.

[4] For JTAG Programming, Device reset can also be done without connecting to the XRES pin or Power cycle mode by using the TMS,TCK,TDI, TDO pins of PSoC 3, and writing to a specific register. But this requires that the DPS setting in NVL is not equal to "Debug Ports Disabled".

[5] By default, PSoC 3 is configured for 4-wire JTAG mode unless user changes the DPS setting. So the TMS pin is unidirectional. But if the DPS setting is changed to non-JTAG mode, the TMS pin in JTAG is bi-directional as the SWD Protocol has to be used for acquiring the PSoC 3 device initially. After switching from SWD to JTAG mode, the TMS pin will be uni-directional. In such a case, unidirectional buffer should not be used on TMS line.

[6] nTRST JTAG pin (P1[5]) cannot be used to reset the JTAG TAP controlller during first time programming of PSoC 3 as the default setting is 4-wire JTAG (nTRST disabled). Use the TMS, TCK pins to do a reset of JTAG TAP controller.

[7] If XRES pin is used by host, P1[2] will be configured as XRES by default only for 48-pin devices (without dedicated XRES pin). For devices with dedicated XRES pin, P1[2] is GPIO pin by default. So use P1[2] as Reset pin only for 48-pin devices, but use dedicated XRES pin for rest of devices.

9.2 Serial Wire Debug Interface

The SWD interface is the preferred alternative to the JTAG interface. It requires only two pins instead of the four or five needed by JTAG. SWD provides all of the programming and debugging features of JTAG at the same speed. SWD does not provide access to scan chains or device chaining. The SWD clock frequency can be up to 1/3 of the CPU clock frequency.

SWD uses two pins, either two of the JTAG pins (TMS and TCK) or the USBIO D+ and D– pins. The USBIO pins are useful for in system programming of USB solutions that would otherwise require a separate programming connector. One pin is used for the data clock and the other is used for data input and output.

SWD can be enabled on only one of the pin pairs at a time. This only happens if, within 8 µs (key window) after reset, that pin pair (JTAG or USB) receives a predetermined sequence of 1s and 0s. SWD is used for debugging or for programming the flash memory.

The SWD interface can be enabled from the JTAG interface or disabled, allowing its pins to be used as GPIO. Unlike JTAG, the SWD interface can always be reacquired on any device during the key window. It can then be used to reenable the JTAG interface, if desired. When using SWD or JTAG pins as standard GPIO, make sure that the GPIO functionality and PCB circuits do not interfere with SWD or JTAG use.

Figure 9-2. SWD Interface Connections between PSoC 3 and Programmer

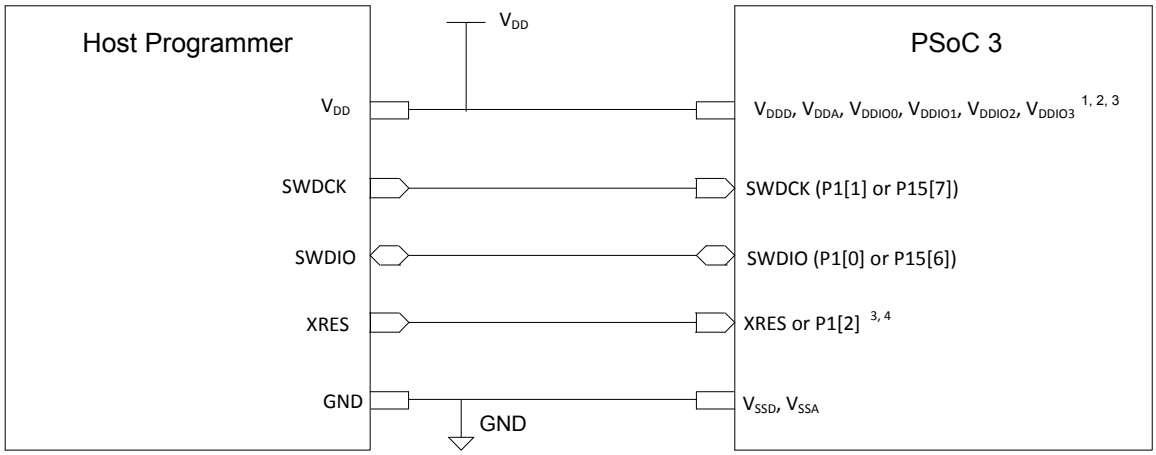

[1] The voltage levels of the Host Programmer and the PSoC 3 voltage domains involved in Programming should be the same. XRES pin (XRES_N or P1[2]) is powered by V_{DDIO1}. The USB SWD pins are powered by V_{DDD}. So for Programming using the USB SWD pins with XRES pin, the V_{DDD}, V_{DDIO1} of PSoC 3 should be at the same voltage level as Host V_{DD}. Rest of PSoC 3 voltage domains (V_{DDA}, V_{DDIO0}, V_{DDIO2}, V_{DDIO3}) need not be at the same voltage level as host Programmer. The Port 1 SWD pins are powered by V_{DDIO1}. So V_{DDIO1} of PSoC 3 should be at same voltage level as host V_{DD} for Port 1 SWD programming. Rest of PSoC 3 voltage domains (V_{DDD}, V_{DDA}, V_{DDIO0}, V_{DDIO2}, V_{DDIO3}) need not be at the same voltage level as host Programmer.

[2] Vdda must be greater than or equal to all other power supplies (Vddd, Vddio's) in PSoC 3.

[3] For Power cycle mode Programming, XRES pin is not required. But the Host programmer must have the capability to toggle power (Vddd, Vdda, All Vddio's) to PSoC 3. This may typically require external interface circuitry to toggle power which will depend on the programming setup. The power supplies can be brought up in any sequence, however, once stable, VDDA must be greater than or equal to all other supplies.

[4] P1[2] will be configured as XRES by default only for 48-pin devices (without dedicated XRES pin). For devices with dedicated XRES pin, P1[2] is GPIO pin by default. So use P1[2] as Reset pin only for 48-pin devices, but use dedicated XRES pin for rest of devices.

9.3 Debug Features

Using the JTAG or SWD interface, the CY8C36 supports the following debug features:

- Halt and single-step the CPU
- View and change CPU and peripheral registers, and RAM addresses
- Eight program address breakpoints
- One memory access breakpoint—break on reading or writing any memory address and data value
- Break on a sequence of breakpoints (non recursive)
- Debugging at the full speed of the CPU
- Compatible with PSoC Creator and MiniProg3 programmer and debugger
- Standard JTAG programming and debugging interfaces make CY8C36 compatible with other popular third-party tools (for example, ARM / Keil)

9.4 Trace Features

The CY8C36 supports the following trace features when using JTAG or SWD:

- Trace the 8051 program counter (PC), accumulator register (ACC), and one SFR / 8051 core RAM register
- Trace depth up to 1000 instructions if all registers are traced, or 2000 instructions if only the PC is traced (on devices that include trace memory)
- Program address trigger to start tracing
- Trace windowing, that is, only trace when the PC is within a given range
- Two modes for handling trace buffer full: continuous (overwriting the oldest trace data) or break when trace buffer is full

9.5 Single Wire Viewer Interface

The SWV interface is closely associated with SWD but can also be used independently. SWV data is output on the JTAG interface's TDO pin. If using SWV, you must configure the device for SWD, not JTAG. SWV is not supported with the JTAG interface.

SWV is ideal for application debug where it is helpful for the firmware to output data similar to 'printf' debugging on PCs. The SWV is ideal for data monitoring, because it requires only a single pin and can output data in standard UART format or Manchester encoded format. For example, it can be used to tune a PID control loop in which the output and graphing of the three error terms greatly simplifies coefficient tuning.

The following features are supported in SWV:

- 32 virtual channels, each 32 bits long
- Simple, efficient packing and serializing protocol
- Supports standard UART format (N81)

9.6 Programming Features

The JTAG and SWD interfaces provide full programming support. The entire device can be erased, programmed, and verified. You can increase flash protection levels to protect firmware IP. Flash protection can only be reset after a full device erase. Individual flash blocks can be erased, programmed, and verified, if block security settings permit.

9.7 Device Security

PSoC 3 offers an advanced security feature called device security, which permanently disables all test, programming, and debug ports, protecting your application from external access. The device security is activated by programming a 32-bit key (0×50536F43) to a Write Once Latch (WOL).

The Write Once Latch is a type of nonvolatile latch (NVL). The cell itself is an NVL with additional logic wrapped around it. Each WOL device contains four bytes (32 bits) of data. The wrapper outputs a '1' if a super-majority (28 of 32) of its bits match a pre-determined pattern (0×50536F43); it outputs a '0' if this majority is not reached. When the output is 1, the Write Once NV latch locks the part out of Debug and Test modes; it also permanently gates off the ability to erase or alter the contents of the latch. Matching all bits is intentionally not required, so that single (or few) bit failures do not deassert the WOL output. The state of the NVL bits after wafer processing is truly random with no tendency toward 1 or 0.

The WOL only locks the part after the correct 32-bit key (0×50536F43) is loaded into the NVL's volatile memory, programmed into the NVL's nonvolatile cells, and the part is reset. The output of the WOL is only sampled on reset and used to disable the access. This precaution prevents anyone from reading, erasing, or altering the contents of the internal memory.

The user can write the key into the WOL to lock out external access only if no flash protection is set (see "Flash Security" on page 21). However, after setting the values in the WOL, a user still has access to the part until it is reset. Therefore, a user can write the key into the WOL, program the flash protection data, and then reset the part to lock it.

If the device is protected with a WOL setting, Cypress cannot perform failure analysis and, therefore, cannot accept RMAs from customers. The WOL can be read out through the SWD port to electrically identify protected parts. The user can write the key in WOL to lock out external access only if no flash protection is set. For more information on how to take full advantage of the security features in PSoC see the PSoC 3 TRM.

Disclaimer

Note the following details of the flash code protection features on Cypress devices.

Cypress products meet the specifications contained in their particular Cypress data sheets. Cypress believes that its family of products is one of the most secure families of its kind on the market today, regardless of how they are used. There may be methods, unknown to Cypress, that can breach the code protection features. Any of these methods, to our knowledge, would be dishonest and possibly illegal. Neither Cypress nor any other semiconductor manufacturer can guarantee the security of their code. Code protection does not mean that we are guaranteeing the product as "unbreakable."

Cypress is willing to work with the customer who is concerned about the integrity of their code. Code protection is constantly evolving. We at Cypress are committed to continuously improving the code protection features of our products.

10. Development Support

The CY8C36 family has a rich set of documentation, development tools, and online resources to assist you during your development process. Visit psoc.cypress.com/getting-started to find out more.

10.1 Documentation

A suite of documentation, supports the CY8C36 family to ensure that you can find answers to your questions quickly. This section contains a list of some of the key documents.

Software User Guide: A step-by-step guide for using PSoC Creator. The software user guide shows you how the PSoC Creator build process works in detail, how to use source control with PSoC Creator, and much more.

Component data sheets: The flexibility of PSoC allows the creation of new peripherals (components) long after the device has gone into production. Component data sheets provide all of the information needed to select and use a particular component, including a functional description, API documentation, example code, and AC/DC specifications.

Application Notes: PSoC application notes discuss a particular application of PSoC in depth; examples include brushless DC motor control and on-chip filtering. Application notes often include example projects in addition to the application note document.

Technical Reference Manual: The Technical Reference Manual (TRM) contains all the technical detail you need to use a PSoC device, including a complete description of all PSoC registers.

10.2 Online

In addition to print documentation, the Cypress PSoC forums connect you with fellow PSoC users and experts in PSoC from around the world, 24 hours a day, 7 days a week.

10.3 Tools

With industry standard cores, programming, and debugging interfaces, the CY8C36 family is part of a development tool ecosystem. Visit us at www.cypress.com/go/psoccreator for the latest information on the revolutionary, easy to use PSoC Creator IDE, supported third party compilers, programmers, debuggers, and development kits.

11. Electrical Specifications

Specifications are valid for -40°C ≤ Ta ≤ 125°C and Tj ≤ 150°C, except where noted. Specifications are valid for 1.71 V to 5.5 V, except where noted. The unique flexibility of the PSoC UDBs and analog blocks enable many functions to be implemented in PSoC Creator components, see the component data sheets for full AC/DC specifications of individual functions. See the Example Peripherals on page 40 for further explanation of PSoC Creator components.

11.1 Absolute Maximum Ratings

Table 11-1. Absolute Maximum Ratings DC Specifications [17]

Parameter	Description	Conditions	Min	Typ	Max	Units
Tstorag	Storage temperature	Recommended storage temperature is 0 °C–50 °C. Exposure to storage temperatures above 125 °C for extended periods may affect device reliability	–55	25	125	°C
Vdda	Analog supply voltage relative to Vssd		–0.5	–	6	V
Vddd	Digital supply voltage relative to Vssd		–0.5	–	6	V
Vddio	I/O supply voltage relative to Vssd		–0.5	–	6	V
Vcca	Direct analog core voltage input		–0.5	–	1.95	V
Vccd	Direct digital core voltage input		–0.5	–	1.95	V
Vssa	Analog ground voltage		Vssd – 0.5	–	Vssd + 0.5	V
Vgpio[18]	DC input voltage on GPIO	Includes signals sourced by Vdda and routed internal to the pin	Vssd – 0.5	–	Vddio + 0.5	V
Vsio	DC input voltage on SIO	Output disabled	Vssd – 0.5	–	7	V
		Output enabled	Vssd – 0.5	–	6	V
Ivddio [19]	Current per Vddio supply pin	–40 °C to +85 °C	–	–	100	mA
		–40 °C to +125 °C	–	–	40	
I_{GPIO}	GPIO current		–30	–	41	mA
I_{SIO}	SIO current		–49	–	28	mA
I_{USBIO}	USBIO current		–56	–	59	mA
V_{EXTREF}	ADC external reference inputs	Pins P0[3], P3[2]	–	–	2	V
LU	Latch up current [20]		–140	–	140	mA
ESD_{HBM}	Electrostatic discharge voltage, Human body model	V_{SSA} tied to V_{SSD}	2200	–	–	V
		V_{SSA} not tied to V_{SSD}	750	–	–	V
ESD_{CDM}	Electro-static discharge voltage	Charge Device Model	500	–	–	V

Note Usage above the absolute maximum conditions listed in Table 11-1 may cause permanent damage to the device. Exposure to maximum conditions for extended periods of time may affect device reliability. When used below maximum conditions but above normal operating conditions the device may not operate to specification.

Notes
17. Usage above the absolute maximum conditions listed in Table 11-1 may cause permanent damage to the device. Exposure to Absolute Maximum conditions for extended periods of time may affect device reliability. The Maximum Storage Temperature is 150 °C in compliance with JEDEC Standard JESD22-A103, High Temperature Storage Life. When used below Absolute Maximum conditions but above normal operating conditions, the device may not operate to specification.
18. The Vddio supply voltage must be greater than the maximum analog voltage on the associated GPIO pins. Maximum analog voltage on GPIO pin ≤ Vddio ≤ Vdda.
19. Maximum value 100 mA of Iddio applies only to –40 °C to +85 °C range and the limit of Iddio parameter for the –40 °C to +125 °C range is 40 mA.
20. Meets or exceeds JEDEC Spec EIA/JESD78 IC Latch-up Test.

11.2 Device Level Specifications

Specifications are valid for -40°C ≤ Ta ≤ 125°C and Tj ≤ 150°C, except where noted. Specifications are valid for 1.71 V to 5.5 V, except where noted.

11.2.1 Device Level Specifications

Table 11-2. DC Specifications

Parameter	Description	Conditions	Min	Typ	Max	Units
V_{DDA}	Analog supply voltage and input to analog core regulator	Analog core regulator enabled	1.8	–	5.5	V
V_{DDA}	Analog supply voltage, analog regulator bypassed	Analog core regulator disabled	1.71	1.8	1.89	V
V_{DDD}	Digital supply voltage relative to V_{SSD}	Digital core regulator enabled	1.8	–	V_{DDA}[21]	V
V_{DDD}	Digital supply voltage, digital regulator bypassed	Digital core regulator disabled	1.71	1.8	1.89	V
V_{DDIO}[22]	I/O supply voltage relative to V_{SSIO}		1.71	–	V_{DDA}[21]	V
V_{CCA}	Direct analog core voltage input (Analog regulator bypass)	Analog core regulator disabled	1.71	1.8	1.89	V
V_{CCD}	Direct digital core voltage input (Digital regulator bypass)	Digital core regulator disabled	1.71	1.8	1.89	V

Notes
21. V_{DDX} = 3.3 V.
22. Based on device specifications (not production tested).

Table 11-2. DC Specifications *(continued)*

Parameter	Description	Conditions	Min	Typ	Max	Units
Idd[23, 24]	**Active Mode, VDD = 1.71 V - 5.5 V**					
	Execute from CPU instruction buffer, see Flash Program Memory on page 21					
	CPU at 3 MHz	T = –40 °C	–	1.3	–	mA
		T = 25 °C	–	1.6	–	mA
		T = 85 °C	–	4.8	–	mA
		T = 125 °C	–	4.9	–	mA
	CPU at 6 MHz	T = –40 °C	–	2.1	–	mA
		T = 25 °C	–	2.3	–	mA
		T = 85 °C	–	5.6	–	mA
		T = 125 °C	–	5.8	–	mA
	CPU at 12 MHz	T = –40 °C	–	3.5	–	mA
		T = 25 °C	–	3.8	–	mA
		T = 85 °C	–	7.1	–	mA
		T = 125 °C	–	9.0	–	mA
	CPU at 24 MHz	T = –40 °C	–	6.3	–	mA
		T = 25 °C	–	6.6	–	mA
		T = 85 °C	–	10	–	mA
		T = 125 °C	–	15.8	–	mA
	CPU at 48 MHz	T = –40 °C	–	11.5	–	mA
		T = 25 °C	–	12	–	mA
		T = 85 °C	–	15.5	–	mA
		T = 125 °C	–	21.7	–	mA
	CPU at 62 MHz	T = –40 °C	–	16	–	mA
		T = 25 °C	–	16	–	mA
		T = 85 °C	–	19.5	–	mA
		T = 125 °C	–	27.8	–	mA

Notes
23. The current consumption of additional peripherals that are implemented only in programmed logic blocks can be found in their respective data sheets, available in PSoC Creator, the integrated design environment. To compute total current, find CPU current at frequency of interest and add peripheral currents for your particular system from the device data sheet and component data sheets.
24. Total current for all power domains: digital (I_{DDD}), analog (I_{DDA}), and I/Os ($I_{DDIO0, 1, 2, 3}$). All I/Os floating.

Table 11-2. DC Specifications *(continued)*

Parameter	Description	Conditions		Min	Typ	Max	Units
	Sleep Mode[25]						
	CPU OFF RTC = ON (= ECO32K ON, in low power mode) Sleep timer = ON (= ILO ON at 1 kHz) [26] WDT = OFF I^2C Wake = OFF Comparator = OFF POR = ON SIO Pins in single ended input, unregulated output mode	$V_{DD} = V_{DDIO}$ = 4.5 V–5.5 V	T = –40 °C	–	1.1	–	µA
			T = 25 °C	–	1.1	–	µA
			T = 85 °C	–	15	–	µA
			T = 125 °C	–	20.3	–	µA
		$V_{DD} = V_{DDIO}$ = 2.7 V–3.6 V	T = –40 °C	–	1	–	µA
			T = 25 °C	–	1	–	µA
			T = 85 °C	–	12	–	µA
			T = 125 °C	–	18.5	–	µA
		$V_{CC} = V_{DDIO}$ = 1.71 V–1.95 V	T = 25 °C	–	2.2	–	µA
			T = 125 °C	–	16.2	–	µA
	Comparator = ON CPU = OFF RTC = OFF Sleep timer = OFF WDT = OFF I^2C Wake = OFF POR = ON SIO Pins in single ended input, unregulated output mode	$V_{DD} = V_{DDIO}$ = 2.7 V–3.6 V	T = 25 °C	–	2.2	–	µA
	I^2C Wake = ON CPU = OFF RTC = OFF Sleep timer = OFF WDT = OFF Comparator = OFF POR = ON SIO Pins in single ended input, unregulated output mode	$V_{DD} = V_{DDIO}$ = 2.7 V–3.6 V	T = 25 °C	–	2.2	–	µA

Notes
25. If Vccd and Vcca are externally regulated, the voltage difference between Vccd and Vcca must be less than 50 mV.
26. Sleep timer generates periodic interrupts to wake up the CPU. This specification applies only to those times that the CPU is off.

Table 11-2. DC Specifications *(continued)*

Parameter	Description	Conditions		Min	Typ	Max	Units
	Hibernate Mode[27]						
	Hibernate mode current All regulators and oscillators off. SRAM retention GPIO interrupts are active SIO Pins in single ended input, unregulated output mode	$V_{DD} = V_{DDIO}$ = 4.5 V–5.5 V	T = –40 °C	–	0.2	–	nA
			T = 25 °C	–	0.5	–	nA
			T = 85 °C	–	4.1	–	nA
			T = 125 °C	–	17.7	–	nA
		$V_{DD} = V_{DDIO}$ = 2.7 V–3.6 V	T = –40 °C	–	0.2	–	nA
			T = 25 °C	–	0.2	–	nA
			T = 85 °C	–	3.2	–	nA
			T = 125 °C	–	15.3	–	nA
		$V_{CC} = V_{DDIO}$ = 1.71 V–1.95 V	T = –40 °C	–	0.2	–	nA
			T = 25 °C	–	0.2	–	nA
			T = 85 °C	–	3.3	–	nA
			T = 125 °C	–	12.4	–	nA
I_{DDAR}	Analog current consumption while device is reset [28]	$V_{DDA} \leq 3.6$ V		–	0.3	–	mA
		$V_{DDA} > 3.6$ V		–	1.4	–	mA
I_{DDDR}	Digital current consumption while device is reset [28]	$V_{DDD} \leq 3.6$ V		–	1.1	–	mA
		$V_{DDD} > 3.6$ V		–	0.7	–	mA
I_{IB}	Input bias current [28]		T = 25 °C	–	10	–	pA

Notes
27. If Vccd and Vcca are externally regulated, the voltage difference between Vccd and Vcca must be less than 50 mV.
28. Based on device characterization (not production tested). USBIO pins tied to ground (V_{SSD}).

Figure 11-1. Active Mode Current vs F_{CPU}, V_{DD} = 3.3 V, Temperature = 25 °C

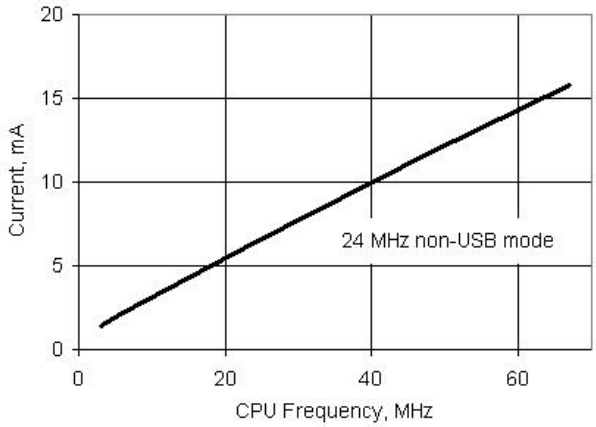

Table 11-3. AC Specifications[29]

Parameter	Description	Conditions	Min	Typ	Max	Units
F_{CPU}	CPU frequency	1.71 V ≤ Vddd ≤ 5.5 V, -40°C ≤ Ta ≤ 85°C and Tj ≤ 100°C	DC	–	67	MHz
		1.71 V ≤ Vddd ≤ 5.5 V, -40°C ≤ Ta ≤ 125°C and Tj ≤ 150°C	DC	–	50	MHz
F_{busclk}	Bus frequency	1.71 V ≤ Vddd ≤ 5.5 V, -40°C ≤ Ta ≤ 85°C and Tj ≤ 100°C	DC	–	67	MHz
		1.71 V ≤ Vddd ≤ 5.5 V, -40°C ≤ Ta ≤ 125°C and Tj ≤ 150°C	DC	–	50	MHz
Svdd	Vdd ramp rate		–	–	0.066	V/µs
Tio_init	Time from Vddd/Vdda/Vccd/Vcca ≥ IPOR to I/O ports set to their reset states		–	–	10	µs
Tstartup	Time from Vddd/Vdda/Vccd/Vcca ≥ PRES to CPU executing code at reset vector	Vcca/Vdda = regulated from Vdda/Vddd, no PLL used, fast IMO boot mode (48 MHz typ.)	–	–	33	µs
		Vcca/Vccd = regulated from Vdda/Vddd, no PLL used, slow IMO boot mode (12 MHz typ.)	–	–	66	µs
Tsleep	Wakeup from sleep mode - Occurrence of LVD interrupt to beginning of execution of next CPU instruction	1.71 V ≤ Vddd ≤ 5.5 V, Tj ≤ 100°C	–	–	15	µs
Thibernate	Wakeup from hibernate mode - Application of external interrupt to beginning of execution of next CPU instruction		–	–	100	µs

Figure 11-2. Fcpu vs. Vdd

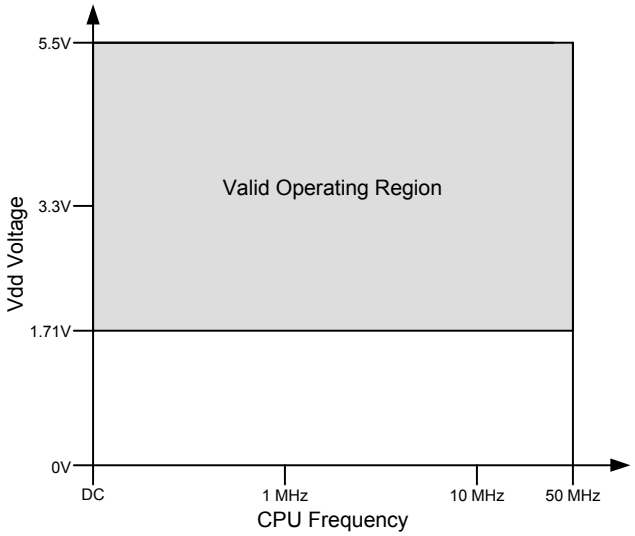

Note
29. Based on device characterization (not production tested).

11.3 Power Regulators

Specifications are valid for -40°C ≤ Ta ≤ 125°C and Tj ≤ 150°C, except where noted. Specifications are valid for 1.71 V to 5.5 V, except where noted.

11.3.1 Digital Core Regulator

Table 11-4. Digital Core Regulator DC Specifications

Parameter	Description	Conditions	Min	Typ	Max	Units
Vddd	Input voltage		1.8	-	5.5	V
Vccd	Output voltage		-	1.80	-	V
	Regulator output capacitance	Total capacitance on the two Vccd pins. Each capacitor is ±10%, X5R ceramic or better, see Power System on page 29	-	1	-	µF

Figure 11-3. Regulators V_{CC} vs V_{DD}

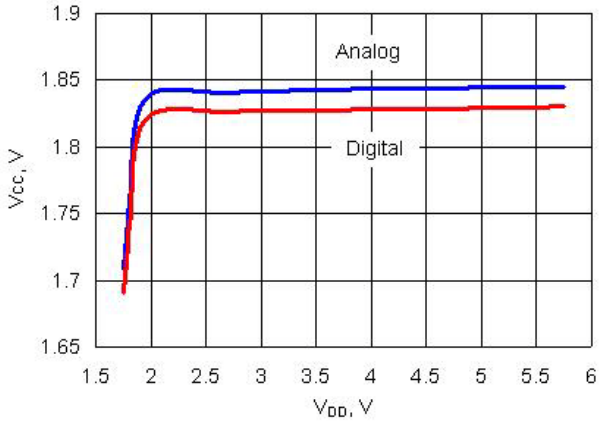

Figure 11-4. Digital Regulator PSRR vs Frequency and V_{DD}

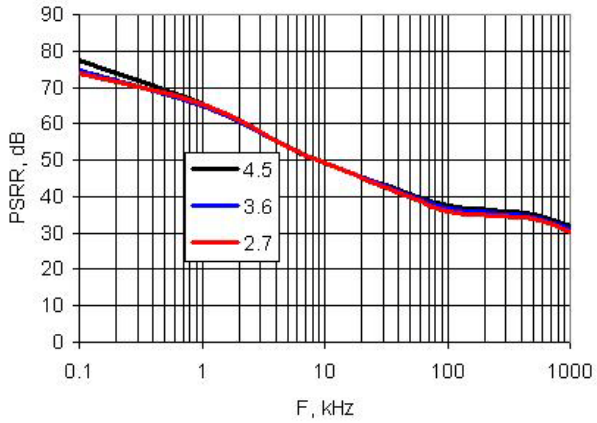

11.3.2 Analog Core Regulator

Table 11-5. Analog Core Regulator DC Specifications

Parameter	Description	Conditions	Min	Typ	Max	Units
Vdda	Input voltage		1.8	-	5.5	V
Vcca	Output voltage		-	1.80	-	V
	Regulator output capacitor	±10%, X5R ceramic or better (X7R for Ta > 85°C)	-	1	-	µF

Figure 11-5. Analog Regulator PSRR vs Frequency and V_{DD}

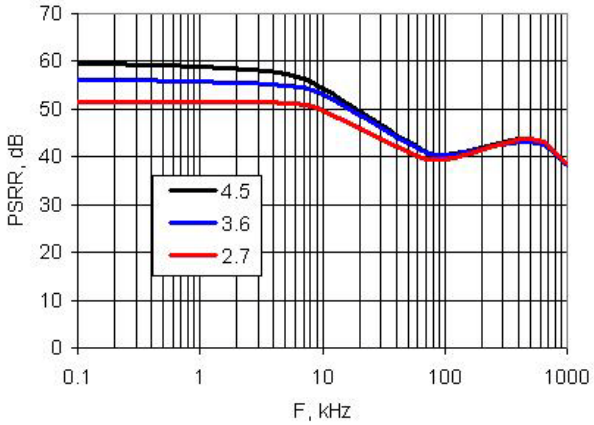

11.4 Inputs and Outputs

Specifications are valid for -40°C ≤ Ta ≤ 125°C and Tj ≤ 150°C, except where noted. Specifications are valid for 1.71 V to 5.5 V, except where noted.

11.4.1 GPIO

Table 11-6. GPIO DC Specifications

Parameter	Description	Conditions	Min	Typ	Max	Units
Vih	Input voltage high threshold	CMOS Input, PRT[x]CTL = 0	0.7 × Vddio	-	-	V
Vil	Input voltage low threshold	CMOS Input, PRT[x]CTL = 0	-	-	0.3 × Vddio	V
Vih	Input voltage high threshold	LVTTL Input, PRT[x]CTL = 1,Vddio < 2.7 V	0.7 x Vddio	-	-	V
Vih	Input voltage high threshold	LVTTL Input, PRT[x]CTL = 1, Vddio ≥ 2.7V	2.0	-	-	V
Vil	Input voltage low threshold	LVTTL Input, PRT[x]CTL = 1,Vddio < 2.7 V	-	-	0.3 x Vddio	V
Vil	Input voltage low threshold	LVTTL Input, PRT[x]CTL = 1, Vddio ≥ 2.7V	-	-	0.8	V
Voh	Output voltage high	Ioh = 4 mA at 3.3 Vddio	Vddio - 0.6	-	-	V
		Ioh = 1 mA at 1.8 Vddio	Vddio - 0.5	-	-	V
Vol	Output voltage low	Iol = 6 mA at 3.3 Vddio	–	–	0.6	V
		Iol = 3 mA at 1.8 Vddio	–	–	0.6	V
		Iol = 3 mA at 3.3 Vddio	–	–	0.4	V
Rpullup	Pull up resistor		3.5	5.6	8.5	kΩ
Rpulldown	Pull down resistor		3.5	5.6	8.5	kΩ
Iil	Input leakage current (absolute value)[30]	25°C, Vddio = 3.0 V	-	-	2	nA
C_{IN}	Input capacitance[30]	GPIOs not shared with opamp outputs, MHz ECO or kHzECO	–	4	7	pF
		GPIOs shared with MHz ECO or kHzECO[31]	–	5	7	pF
		GPIOs shared with opamp outputs	–	–	18	pF
Vh	Input voltage hysteresis (Schmitt-Trigger)[30]		-	40	-	mV
Idiode	Current through protection diode to Vddio and Vssio		-	-	100	µA
Rglobal	Resistance pin to analog global bus	25°C, Vddio = 3.0 V	–	320	–	Ω
Rmux	Resistance pin to analog mux bus	25°C, Vddio = 3.0 V	–	220	–	Ω

Notes
30. Based on device characterization (Not production tested).
31. For information on designing with PSoC 3 oscillators, refer to the application note, AN54439 - PSoC® 3 and PSoC 5 External Oscillator.

Figure 11-6. GPIO Output High Voltage and Current

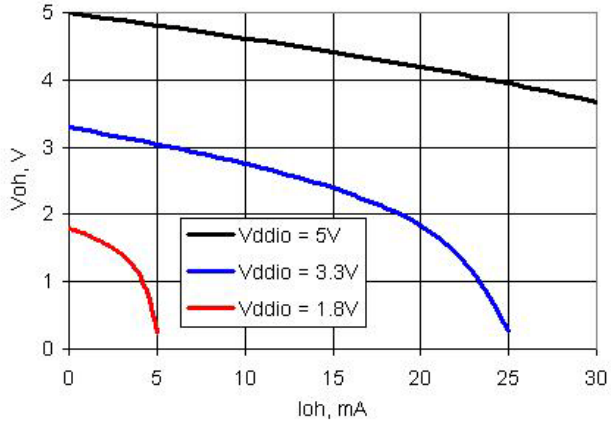

Figure 11-7. GPIO Output Low Voltage and Current

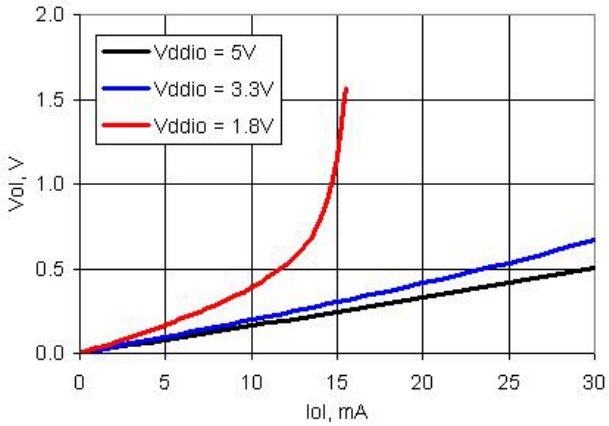

Table 11-7. GPIO AC Specifications

Parameter	Description	Conditions	Min	Typ	Max	Units
TriseF	Rise time in Fast Strong Mode[29]	3 V Vddio Cload = 25 pF	–	–	12	ns
TfallF	Fall time in Fast Strong Mode[29]	3 V Vddio Cload = 25 pF	–	–	12	ns
TriseS	Rise time in Slow Strong Mode[29]	3 V Vddio Cload = 25 pF	–	–	60	ns
TfallS	Fall time in Slow Strong Mode[29]	3 V Vddio Cload = 25 pF	–	–	60	ns
Fgpioout	GPIO output operating frequency					
	3 V ≤ Vddio ≤ 5.5 V, fast strong drive mode	90/10% Vddio into 25 pF, -40°C ≤ Ta ≤ 85°C and Tj ≤ 100°C	-	-	33	MHz
		90/10% Vddio into 25 pF, -40°C ≤ Ta ≤ 125°C and Tj ≤ 150°C	-	-	24	MHz
	1.71 V ≤ Vddio < 3 V, fast strong drive mode	90/10% Vddio into 25 pF, -40°C ≤ Ta ≤ 85°C and Tj ≤ 100°C	-	-	20	MHz
		90/10% Vddio into 25 pF, -40°C ≤ Ta ≤ 125°C and Tj ≤ 150°C	-	-	16	MHz
	3 V ≤ Vddio ≤ 5.5 V, slow strong drive mode	90/10% Vddio into 25 pF, -40°C ≤ Ta ≤ 85°C and Tj ≤ 100°C	-	-	7	MHz
		90/10% Vddio into 25 pF, -40°C ≤ Ta ≤ 125°C and Tj ≤ 150°C	-	-	7	MHz
	1.71 V ≤ Vddio < 3 V, slow strong drive mode	90/10% Vddio into 25 pF, -40°C ≤ Ta ≤ 85°C and Tj ≤ 100°C	-	-	3.5	MHz
		90/10% Vddio into 25 pF, -40°C ≤ Ta ≤ 125°C and Tj ≤ 150°C	-	-	3.5	MHz
Fgpioin	GPIO input operating frequency					
	1.71 V ≤ Vddio ≤ 5.5 V	90/10% better than 60/40 duty cycle, -40°C ≤ Ta ≤ 85°C and Tj ≤ 100°C	-	-	66	MHz
		90/10% better than 60/40 duty cycle, -40°C ≤ Ta ≤ 125°C and Tj ≤ 150°C	-	-	50	MHz

11.4.2 SIO

Table 11-8. SIO DC Specifications

Parameter	Description	Conditions	Min	Typ	Max	Units
Vinmax	Maximum input voltage	All allowed values of Vddio and Vddd	–	–	5.5	V
Vinref	Input voltage reference (Differential input mode)		0.5	-	0.52 ×Vddio	V
Voutref	Output voltage reference (Regulated output mode)					
		Vddio > 3.7	1	-	Vddio-1	V
		Vddio < 3.7	1	-	Vddio - 0.5	V
Vih	Input voltage high threshold					
	GPIO mode	CMOS input	0.7 × Vddio	-	-	V
	Differential input mode	With hysteresis	SIO_ref + 0.2	–	–	V
Vil	Input voltage low threshold					
	GPIO mode	CMOS input	-	-	0.3 × Vddio	V
	Differential input mode	With hysteresis	–	–	SIO_ref – 0.2	V
Voh	Output voltage high					
	Unregulated mode	Ioh = 4 mA, Vddio = 3.3 V	Vddio - 0.4	-	-	V
	Regulated mode [32]	Ioh = 1 mA	SIO_ref - 0.65	-	SIO_ref + 0.2	V
	Regulated mode [32]	Ioh = 0.1 mA	SIO_ref - 0.3	-	SIO_ref + 0.2	V
Vol	Output voltage low					
		Vddio = 3.30 V, Iol = 25 mA	-	-	0.8	V
		Vddio = 1.80 V, Iol = 4 mA	-	-	0.4	V
		V_{DDIO} = 3.3 V, I_{OL} = 20 mA	–	–	0.4	V
Rpullup	Pull up resistor		3.5	5.6	8.5	kΩ
Rpulldown	Pull down resistor		3.5	5.6	8.5	kΩ
Iil	Input leakage current (absolute value)[33]					
	Vih ≤ Vddsio	25°C, Vddsio = 3.0 V, Vih = 3.0 V	-	-	14	nA
	Vih > Vddsio	25°C, Vddsio = 0 V, Vih = 3.0 V	-	-	10	µA
Cin	Input Capacitance[33]		-	-	7	pF
Vh	Input voltage hysteresis (Schmitt-Trigger)[33]	Single ended mode (GPIO mode)	–	40	–	mV
		Differential mode	–	35	–	mV
Idiode	Current through protection diode to Vssio		-	-	100	µA

Notes
32. See Figure 6-8 on page 35for more information on SIO reference.
33. Based on device characterization (not production tested).

Figure 11-8. SIO Output High Voltage and Current, Unregulated Mode

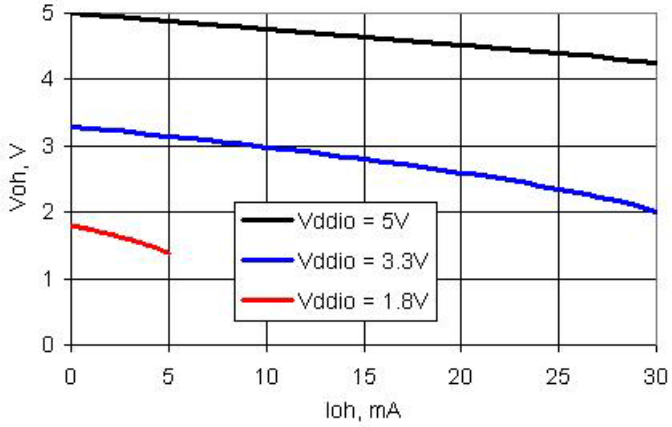

Figure 11-9. SIO Output Low Voltage and Current, Unregulated Mode

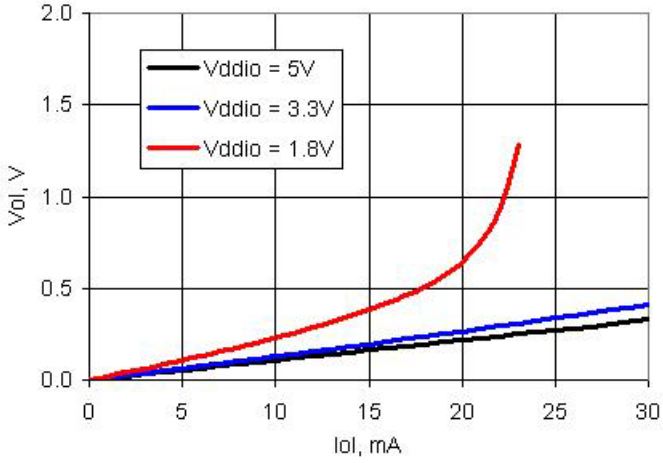

Figure 11-10. SIO Output High Voltage and Current, Regulated Mode

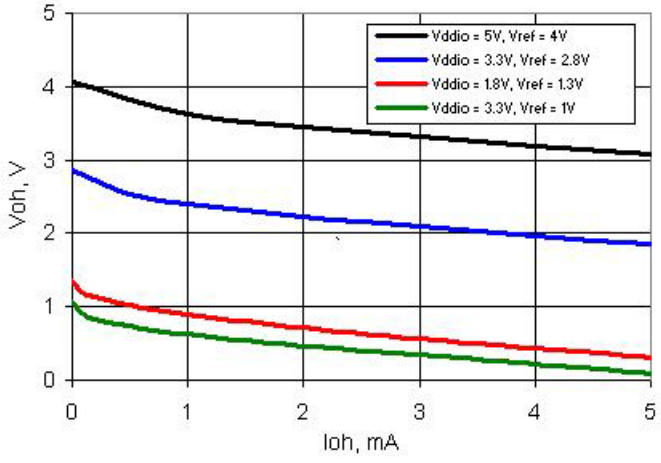

Table 11-9. SIO AC Specifications

Parameter	Description	Conditions	Min	Typ	Max	Units
TriseF	Rise time in Fast Strong Mode (90/10%)[29]	Cload = 25 pF, Vddio = 3.3 V	–	–	12	ns
TfallF	Fall time in Fast Strong Mode (90/10%)[29]	Cload = 25 pF, Vddio = 3.3 V	–	–	12	ns
TriseS	Rise time in Slow Strong Mode (90/10%)[29]	Cload = 25 pF, Vddio = 3.0 V	–	–	80	ns
TfallS	Fall time in Slow Strong Mode (90/10%)[29]	Cload = 25 pF, Vddio = 3.0 V	–	–	70	ns
Fsioout	SIO output operating frequency					
	3.3 V < Vddio < 5.5 V, Unregulated output (GPIO) mode, fast strong drive mode	90/10% Vddio into 25 pF, -40°C ≤ Ta ≤ 85°C and Tj ≤ 100°C	-	-	33	MHz
		90/10% Vddio into 25 pF, -40°C ≤ Ta ≤ 125°C and Tj ≤ 150°C	-	-	24	MHz
	1.71 V < Vddio < 3.3 V, Unregulated output (GPIO) mode, fast strong drive mode	90/10% Vddio into 25 pF	-	-	16	MHz
	3.3 V < Vddio < 5.5 V, Unregulated output (GPIO) mode, slow strong drive mode	90/10% Vddio into 25 pF	-	-	5	MHz
	1.71 V < Vddio < 3.3 V, Unregulated output (GPIO) mode, slow strong drive mode	90/10% Vddio into 25 pF	-	-	4	MHz
	3.3 V < Vddio < 5.5 V, Regulated output mode, fast strong drive mode	Output continuously switching into 25 pF	-	-	20	MHz
	1.71 V < Vddio < 3.3 V, Regulated output mode, fast strong drive mode	Output continuously switching into 25 pF	-	-	10	MHz
	1.71 V < Vddio < 5.5 V, Regulated output mode, slow strong drive mode	Output continuously switching into 25 pF	-	-	2.5	MHz
Fsioin	SIO input operating frequency					
	1.71 V ≤ Vddio ≤ 5.5 V	90/10% better than 60/40 duty cycle, -40°C ≤ Ta ≤ 85°C and Tj ≤ 100°C	-	-	66	MHz
		90/10% better than 60/40 duty cycle, -40°C ≤ Ta ≤ 125°C and Tj ≤ 150°C	-	-	50	MHz

Figure 11-11. SIO Output Rise and Fall Times, Fast Strong Mode, V_{DDIO} = 3.3 V, 25 pF Load

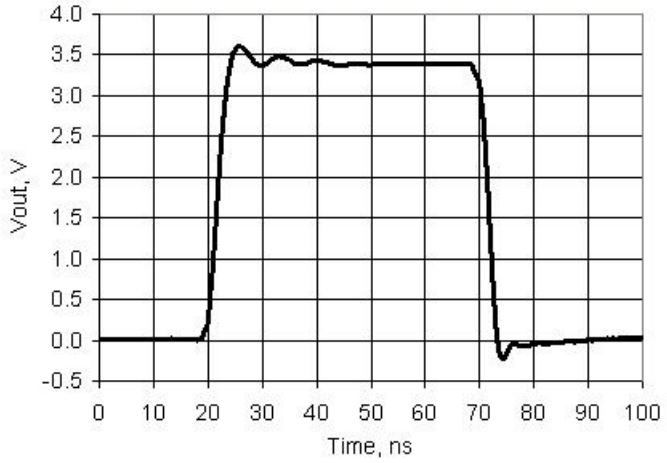

Figure 11-12. SIO Output Rise and Fall Times, Slow Strong Mode, V_{DDIO} = 3.3 V, 25 pF Load

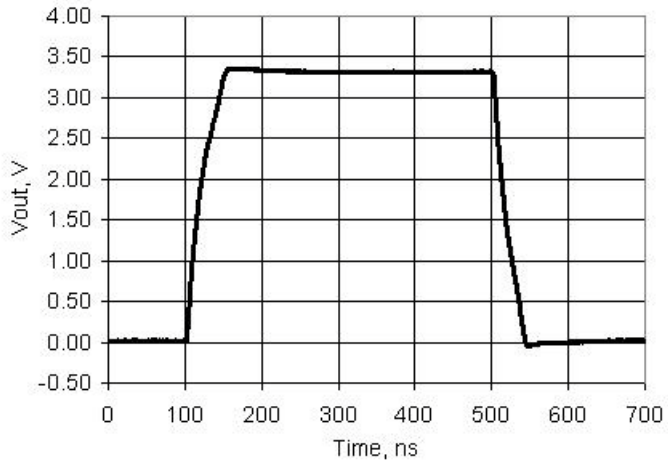

11.4.3 USBIO

Table 11-10. USBIO DC Specifications

Parameter	Description	Conditions	Min	Typ	Max	Units
Rusbi	USB D+ pull up resistance	With idle bus	0.900	-	1.575	kΩ
Rusba	USB D+ pull up resistance	While receiving traffic	1.425	-	3.090	kΩ
Vohusb	Static output high	15 kΩ ±5% to Vss, internal pull up enabled	2.8	-	3.6	V
Volusb	Static output low	15 kΩ ±5% to Vss, internal pull up enabled	-	-	0.3	V
Vihgpio	Input voltage high, GPIO mode	$V_{DDD} \geq 3$ V	2	–	–	V
Vilgpio	Input voltage low, GPIO mode	$V_{DDD} \geq 3$ V	–	–	0.8	V
Vohgpio	Output voltage high, GPIO mode	Ioh = 4 mA, Vddio ≥ 3 V	2.4	-	-	V
Volgpio	Output voltage low, GPIO mode	Iol = 4 mA, Vddio ≥ 3 V	-	-	0.3	V
Vdi	Differential input sensitivity	|(D+)-(D-)|	-	-	0.2	V
Vcm	Differential input common mode range		0.8	-	2.5	V
Vse	Single ended receiver threshold		0.8	-	2	V
Rps2	PS/2 pull up resistance	In PS/2 mode, with PS/2 pull up enabled	3	-	7	kΩ
Rext	External USB series resistor	In series with each USB pin	21.78 (-1%)	22	22.22 (+1%)	Ω
Zo	USB driver output impedance	Including Rext, -40°C ≤ Ta ≤ 85°C and Tj ≤ 100°C	28	-	44	Ω
		Including Rext, -40°C ≤ Ta ≤ 125°C and Tj ≤ 150°C	28	-	46	Ω
Cin	USB transceiver input capacitance		-	-	20	pF
Iil [34]	Input leakage current (absolute value)	25°C, Vddio = 3.0 V	-	-	2	nA

Note
34. Based on device characterization (not production tested).

Figure 11-13. USBIO Output High Voltage and Current, GPIO Mode

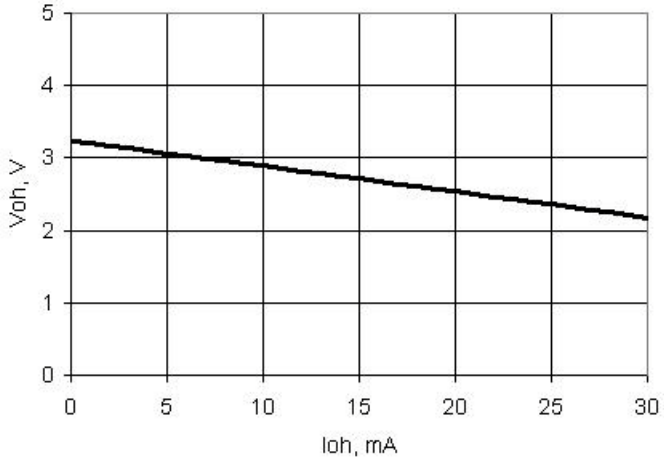

Figure 11-14. USBIO Output Low Voltage and Current, GPIO Mode

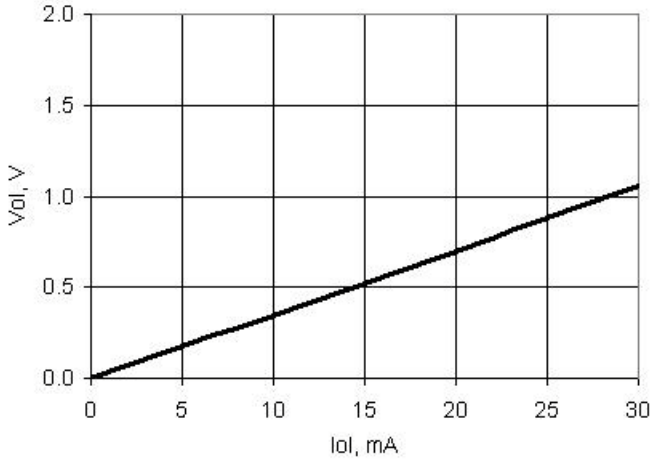

Table 11-11. USBIO AC Specifications

Parameter	Description	Conditions	Min	Typ	Max	Units
Tdrate	Full-speed data rate average bit rate		12 - 0.25%	12	12 + 0.25%	MHz
Tdjr1	Receiver data jitter tolerance to next transition		-8	-	8	ns
Tdjr2	Receiver data jitter tolerance to pair transition		-5	-	5	ns
Tudj1	Driver differential jitter to next transition		-3.5	-	3.5	ns
Tudj2	Driver differential jitter to pair transition		-4	-	4	ns
Tfdeop	Source jitter for differential transition to SE0 transition		-2	-	5	ns
Tfeopt	Source SE0 interval of EOP		160	-	175	ns
Tfeopr	Receiver SE0 interval of EOP		82	-	-	ns
Tfst	Width of SE0 interval during differential transition		-	-	14	ns
Fgpio_out	GPIO mode output operating frequency	3 V ≤ Vddd ≤ 5.5 V	-	-	20	MHz
		Vddd = 1.71 V	-	-	6	MHz
Tr_gpio	Rise time, GPIO mode, 10%/90% Vddd	Vddd > 3 V, 25 pF load	–	–	12	ns
		Vddd = 1.71 V, 25 pF load	–	–	40	ns
Tf_gpio	Fall time, GPIO mode, 90%/10% Vddd	Vddd > 3 V, 25 pF load	–	–	12	ns
		Vddd = 1.71 V, 25 pF load	–	–	40	ns

Figure 11-15. USBIO Output Rise and Fall Times, GPIO Mode, V_{DDD} = 3.3 V, 25 pF Load

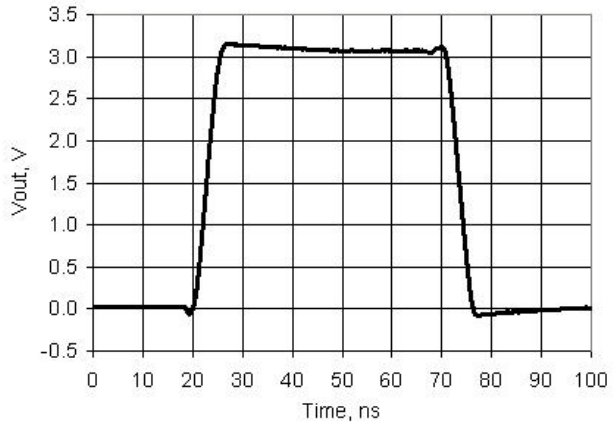

Table 11-12. USB Driver AC Specifications

Parameter	Description	Conditions	Min	Typ	Max	Units
Tr	Transition rise time		–	–	20	ns
Tf	Transition fall time		–	–	20	ns
TR	Rise/fall time matching	VUSB_5, VUSB_3.3, see	90%	-	111%	
Vcrs	Output signal crossover voltage		1.3	-	2	V

11.4.4 XRES

Table 11-13. XRES DC Specifications

Parameter	Description	Conditions	Min	Typ	Max	Units
Vih	Input voltage high threshold	CMOS Input, PRT[x]CTL = 0	0.7 × Vddio	-	-	V
Vil	Input voltage low threshold	CMOS Input, PRT[x]CTL = 0	-	-	0.3 × Vddio	V
Rpullup	Pull up resistor		3.5	5.6	8.5	kΩ
Cin	Input capacitance[29]		-	3	-	pF
Vh	Input voltage hysteresis (Schmitt-Trigger)[29]		-	100	-	mV
Idiode	Current through protection diode to Vddio and Vssio		-	-	100	µA

Table 11-14. XRES AC Specifications

Parameter	Description	Conditions	Min	Typ	Max	Units
Treset	Reset pulse width		1	-	-	µs

11.5 Analog Peripherals

Specifications are valid for -40°C ≤ Ta ≤ 125°C and Tj ≤ 150°C, except where noted. Specifications are valid for 1.71 V to 5.5 V, except where noted.

11.5.1 Opamp

Table 11-15. Opamp DC Specifications

Parameter	Description	Conditions	Min	Typ	Max	Units
Vioff	Input offset voltage	-40°C ≤ Ta ≤ 85°C and Tj ≤ 100°C	-	-	±2.5	mV
		-40°C ≤ Ta ≤ 125°C and Tj ≤ 150°C	-	-	±5.0	mV
TCVos	Input offset voltage drift with temperature	Power mode = high	–	–	±30	µV / °C
Ge1	Gain error, unity gain buffer mode	Rload = 1 kΩ	-	-	±0.1	%
Vi	Input voltage range		Vssa	-	Vdda	mV
Vo	Output voltage range	Output load = 1 mA	Vssa + 50	-	Vdda - 50	mV
Iout	Output current	Output voltage is between Vssa +500 mV and Vdda -500 mV, and Vdda > 2.7 V, -40°C ≤ Ta ≤ 85°C and Tj ≤ 100°C	25	-	-	mA
		Output voltage is between Vssa +500 mV and Vdda -500 mV, and Vdda > 2.7 V, -40°C ≤ Ta ≤ 125°C and Tj ≤ 150°C	20	-	-	mA
Iout	Output current	Output voltage is between Vssa +500 mV and Vdda -500 mV, and Vdda > 1.7 V and Vdda < 2.7 V	16	-	-	mA
I_{DD}	Quiescent current	Power mode = min	–	250	400	µA
		Power mode = low	–	250	400	µA
		Power mode = med	–	330	950	µA
		Power mode = high	–	1000	2500	µA
CMRR	Common mode rejection ratio[29]		80	–	–	dB
PSRR	Power supply rejection ratio	Vdda ≥ 2.7 V	85	–	–	dB
		Vdda < 2.7 V	70	–	–	dB

Figure 11-16. Opamp Voffset Histogram, 3388 samples/847 parts, 25 °C, Vdda = 5 V

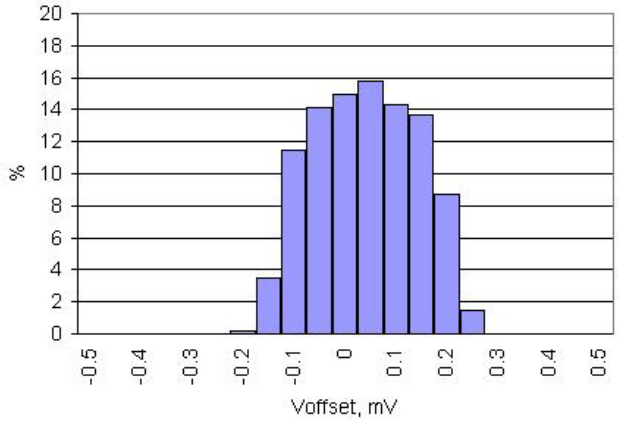

Figure 11-17. Opamp Voffset vs Temperature, Vdda = 5 V

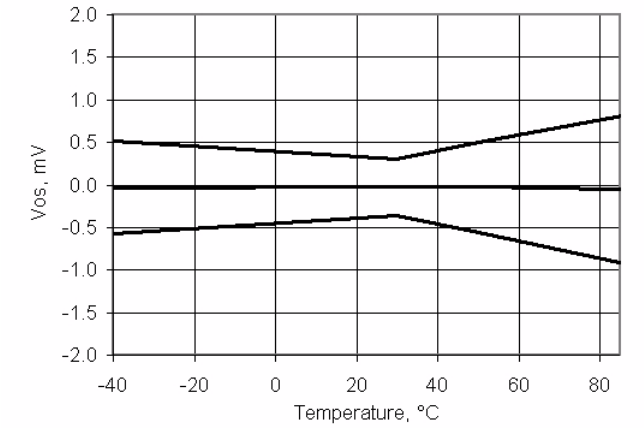

Figure 11-18. Opamp Voffset vs Vcommon and Vdda, 25 °C

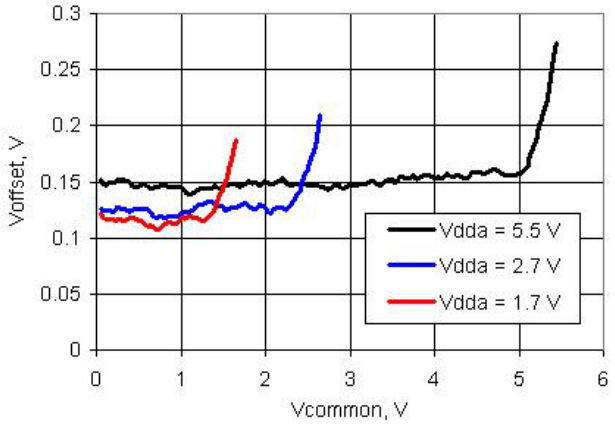

Figure 11-19. Opamp Output Voltage vs Load Current and Temperature, High Power Mode, 25 °C, Vdda = 2.7 V

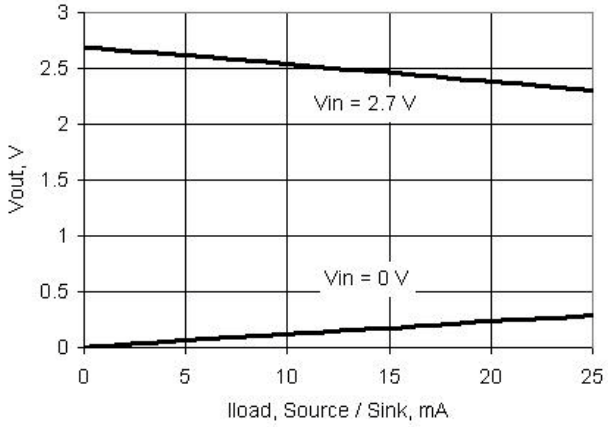

Figure 11-20. Opamp Operating Current vs Vdda and Power Mode

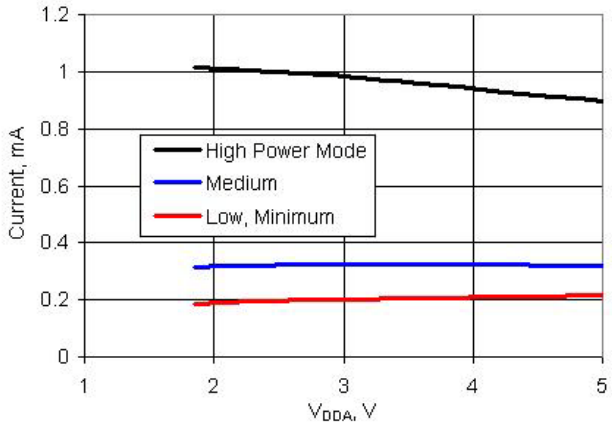

Table 11-16. Opamp AC Specifications

Parameter	Description	Conditions	Min	Typ	Max	Units
GBW	Gain-bandwidth product	Power mode = minimum, 15 pF load	1	–	–	MHz
		Power mode = low, 15 pF load	2	–	–	MHz
		Power mode = medium, 200 pF load	1	–	–	MHz
		Power mode = high, 200 pF load	2.5	–	–	MHz
SR	Slew rate, 20% - 80%	Power mode = low, 15 pF load	1.1	–	–	V/µs
		Power mode = medium, 200 pF load	0.9	–	–	V/µs
		Power mode = high, 200 pF load	3	–	–	V/µs
e_n	Input noise density	Power mode = high, Vdda = 5 V, at 100 kHz	–	45	–	nV/sqrtHz

Figure 11-21. Opamp Noise vs Frequency, Power Mode = High, Vdda = 5 V

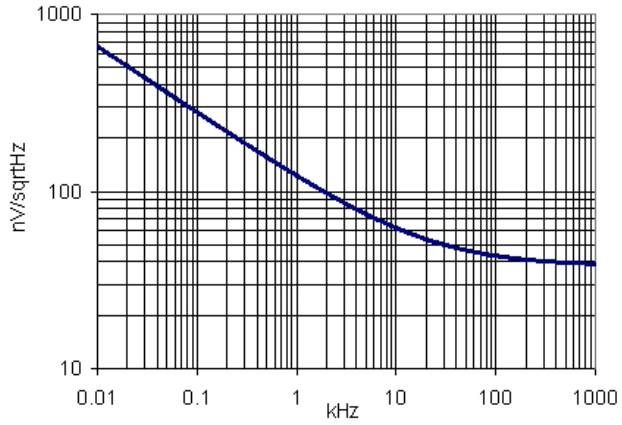

Figure 11-22. Opamp Step Response, Rising

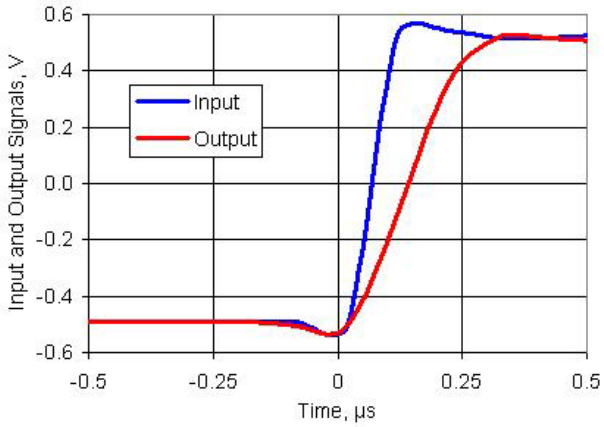

Figure 11-23. Opamp Step Response, Falling

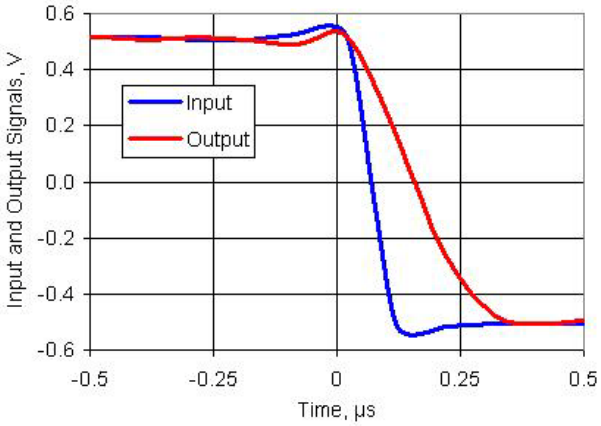

11.5.2 Delta-Sigma ADC

Unless otherwise specified, operating conditions are:

- Operation in continuous sample mode
- fclk = 6.144 MHz
- Reference = 1.024 V internal reference bypassed on P3.2 or P0.3
- Unless otherwise specified, all charts and graphs show typical values

Table 11-17. 12-bit Delta-sigma ADC DC Specifications

Parameter	Description	Conditions	Min	Typ	Max	Units
	Resolution		8	–	12	bits
	Number of channels, single ended		–	–	No. of GPIO	–
	Number of channels, differential	Differential pair is formed using a pair of GPIOs.	–	–	No. of GPIO/2	–
	Monotonic	Yes	–	–	–	–
Ge	Gain error	Buffered, buffer gain = 1, Range = ±1.024 V, 12-bit mode, 25 °C	–	–	±0.2	%
Gd	Gain drift	Buffered, buffer gain = 1, Range = ±1.024 V, 12-bit mode	–	–	50	ppm/°C
Vos	Input offset voltage	Buffered, 16-bit mode, full voltage range	–	–	±0.2	mV
		Buffered, 16-bit mode, V_{DDA} = 1.8 V ± 5%	–	–	±0.1	mV
TCVos	Temperature coefficient, input offset voltage	Buffer gain = 1, 12-bit, Range = ±1.024 V	–	–	1	µV/°C
	Input voltage range, single ended[35]		V_{SSA}	–	V_{DDA}	V
	Input voltage range, differential unbuffered[35]		V_{SSA}	–	V_{DDA}	V
	Input voltage range, differential, buffered[35]		V_{SSA}	–	V_{DDA} – 1	V
INL12	Integral non linearity[35]	Range = ±1.024 V, unbuffered	–	–	±1	LSB
DNL12	Differential non linearity[35]	Range = ±1.024 V, unbuffered	–	–	±1	LSB
INL8	Integral non linearity[35]	Range = ±1.024 V, unbuffered	–	–	±1	LSB
DNL8	Differential non linearity[35]	Range = ±1.024 V, unbuffered	–	–	±1	LSB

Note
35. Based on device characterization (not production tested).

Table 11-17. 12-bit Delta-sigma ADC DC Specifications *(continued)*

Parameter	Description	Conditions	Min	Typ	Max	Units
Rin_Buff	ADC input resistance	Input buffer used	10	–	–	MΩ
Rin_ADC12	ADC input resistance	Input buffer bypassed, 12 bit, Range = ±1.024 V	–	148[36]	–	kΩ
Vextref	ADC external reference input voltage	Pins P0[3], P3[2]	0.9	–	1.3	V
Current Consumption						
I_{DD_12}	I_{DDD} + I_{DDA} Current consumption, 12 bit [37]	192 ksps, unbuffered	–	–	1.95	mA
I_{BUFF}	Buffer current consumption[37]		–	–	2.5	mA

Notes
36. By using switched capacitors at the ADC input an effective input resistance is created. Holding the gain and number of bits constant, the resistance is proportional to the inverse of the clock frequency. This value is calculated, not measured. For more information see the Technical Reference Manual.
37. Based on device characterization (Not production tested).

Table 11-18. Delta-sigma ADC AC Specifications

Parameter	Description	Conditions	Min	Typ	Max	Units
	Startup time		–	–	4	Samples
THD	Total harmonic distortion[37]	Buffer gain = 1, 16 bit, Range = ±1.024 V	–	–	0.0040	%
12-Bit Resolution Mode						
SR12	Sample rate, continuous, high power[37]	Range = ±1.024 V, unbuffered	4	–	192	ksps
BW12	Input bandwidth at max sample rate[37]	Range = ±1.024 V, unbuffered	–	44	–	kHz
SINAD12int	Signal to noise ratio, 12-bit, internal reference[37]	Range = ±1.024 V, unbuffered	66	–	–	dB
8-Bit Resolution Mode						
SR8	Sample rate, continuous, high power[37]	Range = ±1.024 V, unbuffered	8	–	384	ksps
BW8	Input bandwidth at max sample rate[37]	Range = ±1.024 V, unbuffered	–	88	–	kHz
SINAD8int	Signal to noise ratio, 8-bit, internal reference[37]	Range = ±1.024 V, unbuffered	43	–	–	dB

Table 11-19. Delta-sigma ADC Sample Rates, Range = ±1.024 V

Resolution, Bits	Continuous		Multi-Sample		Multi-Sample Turbo	
	Min	Max	Min	Max	Min	Max
8	8000	384000	1911	91701	1829	87771
9	6400	307200	1543	74024	1489	71441
10	5566	267130	1348	64673	1307	62693
11	4741	227555	1154	55351	1123	53894
12	4000	192000	978	46900	956	45850

Figure 11-24. Delta-sigma ADC IDD vs sps, Range = ±1.024 V, Continuous Sample Mode, Input Buffer Bypassed

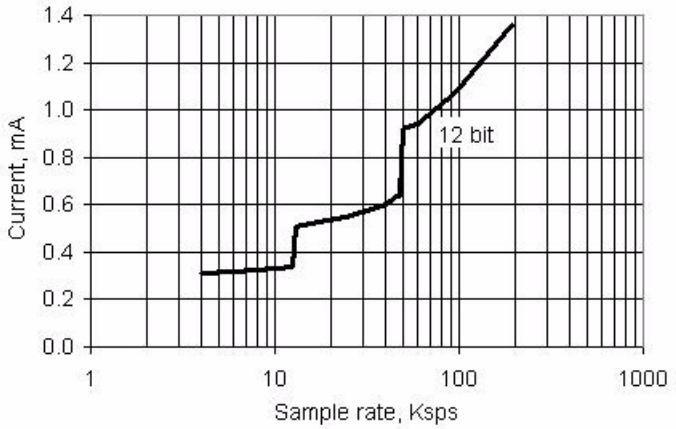

11.5.3 Voltage Reference

Table 11-20. Voltage Reference Specifications

Parameter	Description	Conditions	Min	Typ	Max	Units
Vref [38]	Precision reference	-40°C ≤ Ta ≤ 85°C and Tj ≤ 100°C	1.021 (-0.3%)	1.024	1.027 (+0.3%)	V
		-40°C ≤ Ta ≤ 125°C and Tj ≤ 150°C	1.018 (–0.6%)	1.024	1.030 (+0.6%)	V
	After typical PCB assembly, post reflow	Typical (non-optimized) board layout and 250 °C solder reflow. Device may be calibrated after assembly to improve performance.				
		–40 °C		±0.5		%
		25 °C		±0.2		%
		85 °C		±0.2		%
	Temperature drift[39]	Box method	–	–	30	ppm/°C
	Long term drift		–	100	–	ppm/khr
	Thermal cycling drift (stability)[39, 40]		–	100	–	ppm

Figure 11-25. Voltage Reference vs. Temperature and V_{CCA}

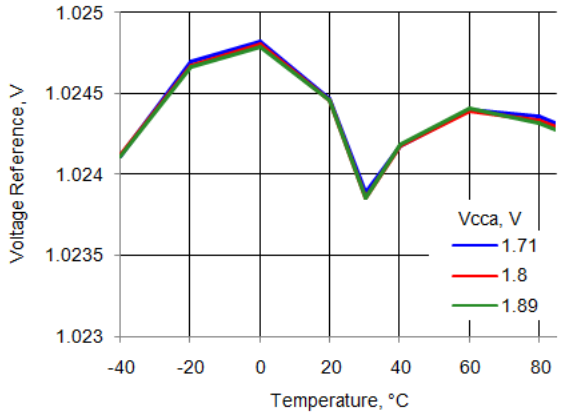

Figure 11-26. Voltage Reference Long-Term Drift

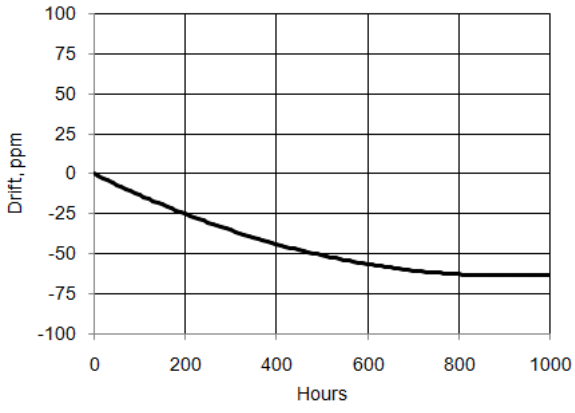

Notes
38. V_{REF} is measured after packaging, and thus accounts for substrate and die attach stresses.
39. Based on device characterization (Not production tested).
40. After eight full cycles between –40 °C and 100 °C.

11.5.4 Analog Globals

Table 11-21. Analog Globals Specifications

Parameter	Description	Conditions	Min	Typ	Max	Units
Rppag	Resistance pin-to-pin through P2[4], AGL0, DSM INP, AGL1, P2[5][41]	V_{DDA} = 3 V	–	1472	2200	Ω
Rppmuxbus	Resistance pin-to-pin through P2[3], amuxbusL, P2[4][41]	V_{DDA} = 3 V	–	706	1100	Ω

11.5.5 Comparator

Table 11-22. Comparator DC Specifications

Parameter	Description	Conditions	Min	Typ	Max	Units
V_{OS}	Input offset voltage in fast mode	Factory trim, Vdda > 2.7 V, Vin ≥ 0.5 V	–		10	mV
	Input offset voltage in slow mode	Factory trim, Vin ≥ 0.5 V	–		9	mV
	Input offset voltage in fast mode[42]	Custom trim	–	–	4	mV
	Input offset voltage in slow mode[42]	Custom trim	–	–	4	mV
	Input offset voltage in ultra low-power mode	V_{DDA} ≤ 4.6 V	–	±12	–	mV
V_{HYST}	Hysteresis	Hysteresis enable mode	–	10	32	mV
V_{ICM}	Input common mode voltage	High current / fast mode	V_{SSA}	–	V_{DDA}	V
		Low current / slow mode	V_{SSA}	–	V_{DDA}	V
		Ultra low-power mode V_{DDA} ≤ 4.6 V	V_{SSA}	–	V_{DDA} – 1.15	V
CMRR	Common mode rejection ratio		–	50	–	dB
Icmp	High current mode/fast mode[29]	-40°C ≤ Ta ≤ 85°C and Tj ≤ 100°C	-	-	400	µA
		-40°C ≤ Ta ≤ 125°C and Tj ≤ 150°C	-	-	600	µA
	Low current mode/slow mode[29]	-40°C ≤ Ta ≤ 85°C and Tj ≤ 100°C	-	-	100	µA
		-40°C ≤ Ta ≤ 125°C and Tj ≤ 150°C	-	-	150	µA
	Ultra low power mode[29]	VDDA ≤ 4.6 V	-	6	-	µA

Table 11-23. Comparator AC Specifications

Parameter	Description	Conditions	Min	Typ	Max	Units
T_{RESP}	Response time, high current mode[43]	50 mV overdrive, measured pin-to-pin	–	75	110	ns
	Response time, low current mode[43]	50 mV overdrive, measured pin-to-pin	–	155	200	ns
	Response time, ultra low-power mode[43]	50 mV overdrive, measured pin-to-pin, V_{DDA} ≤ 4.6 V	–	55	–	µs

Note
41. The resistance of the analog global and analog mux bus is high if V_{DDA} ≤ 2.7 V, and the chip is in either sleep or hibernate mode. Use of analog global and analog mux bus under these conditions is not recommended.
42. The recommended procedure for using a custom trim value for the on-chip comparators can be found in the TRM.
43. Based on device characterization (Not production tested).

11.5.6 IDAC

All specifications are based on use of the low-resistance IDAC output pins (see Pin Descriptions on page 9 for details). See the IDAC component data sheet in PSoC Creator for full electrical specifications and APIs.

Unless otherwise specified, all charts and graphs show typical values.

Table 11-24. IDAC (Current Digital-to-Analog Converter) DC Specifications

Parameter	Description	Conditions	Min	Typ	Max	Units
Resolution			-	8	-	
I_{OUT}	Output current at code = 255	Range = 2.04 mA, code = 255, $V_{DDA} \geq 2.7$ V, Rload = 600 Ω	–	2.04	–	mA
		Range = 2.04 mA, high speed mode, code = 255, $V_{DDA} \leq 2.7$ V, Rload = 300 Ω	–	2.04	–	mA
		Range = 255 µA, code = 255, Rload = 600 Ω	–	255	–	µA
		Range = 31.875 µA, code = 255, Rload = 600 Ω	–	31.875	–	µA
	Monotonicity		–	–	Yes	
INL	Integral nonlinearity	Sink mode, range = 255 µA, Codes 8 – 255, Rload = 2.4 kΩ, Cload = 15 pF	–	±0.9	±1	LSB
		Source mode, range = 255 µA, Codes 8 – 255, Rload = 2.4 kΩ, Cload = 15 pF	–	±1.2	±1.5	LSB
DNL	Differential nonlinearity	Sink mode, range = 255 µA, Rload = 2.4 kΩ, Cload = 15 pF	–	±0.3	±1	LSB
		Source mode, range = 255 µA, Rload = 2.4 kΩ, Cload = 15 pF	–	±0.3	±1	LSB
Ezs	Zero scale error	-40°C ≤ Ta ≤ 85°C and Tj ≤ 100°C	-	0	±1	LSB
		-40°C ≤ Ta ≤ 125°C and Tj ≤ 150°C	-	-	±2	LSB
Eg	Gain error	Range = 2.04 mA, 25 °C	–	–	±2.5	%
		Range = 255 µA, 25 ° C	–	–	±2.5	%
		Range = 31.875 µA, 25 ° C	–	–	±3.5	%
TC_Eg	Temperature coefficient of gain error	Range = 2.04 mA	–	–	0.04	% / °C
		Range = 255 µA	–	–	0.04	% / °C
		Range = 31.875 µA	–	–	0.05	% / °C
Vcompliance	Dropout voltage, source or sink mode	Voltage headroom at max current, Rload to Vdda or Rload to Vssa, Vdiff from Vdda	1	–	–	V

Table 11-24. IDAC (Current Digital-to-Analog Converter) DC Specifications *(continued)*

Parameter	Description	Conditions	Min	Typ	Max	Units
I_{DD}	Operating current, code = 0	Low speed mode, source mode, range = 31.875 µA	–	44	100	µA
		Low speed mode, source mode, range = 255 µA,	–	33	100	µA
		Low speed mode, source mode, range = 2.04 mA	–	33	100	µA
		Low speed mode, sink mode, range = 31.875 µA	–	36	100	µA
		Low speed mode, sink mode, range = 255 µA	–	33	100	µA
		Low speed mode, sink mode, range = 2.04 mA	–	33	100	µA
		High speed mode, source mode, range = 31.875 µA	–	310	500	µA
		High speed mode, source mode, range = 255 µA	–	305	500	µA
		High speed mode, source mode, range = 2.04 mA	–	305	500	µA
		High speed mode, sink mode, range = 31.875 µA	–	310	500	µA
		High speed mode, sink mode, range = 255 µA	–	300	500	µA
		High speed mode, sink mode, range = 2.04 mA	–	300	500	µA

Figure 11-27. IDAC INL vs Input Code, Range = 255 µA, Source Mode

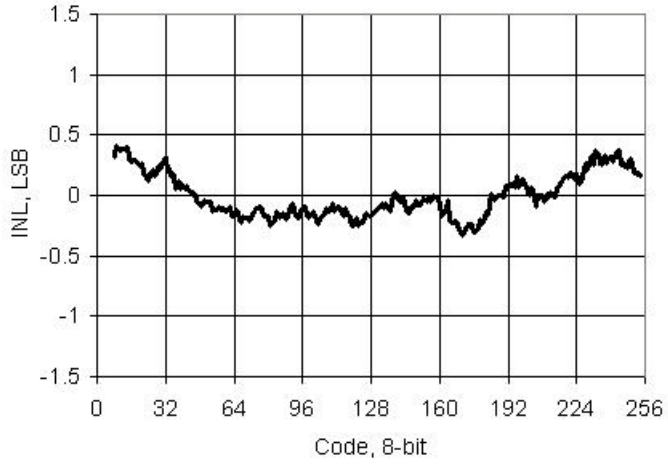

Figure 11-28. IDAC INL vs Input Code, Range = 255 µA, Sink Mode

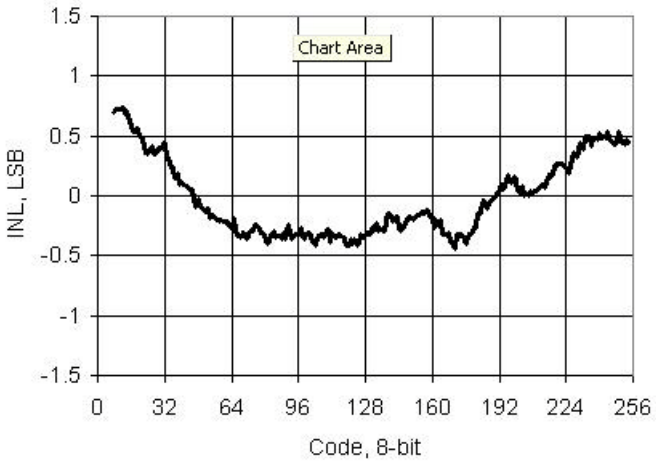

Figure 11-29. IDAC DNL vs Input Code, Range = 255 µA, Source Mode

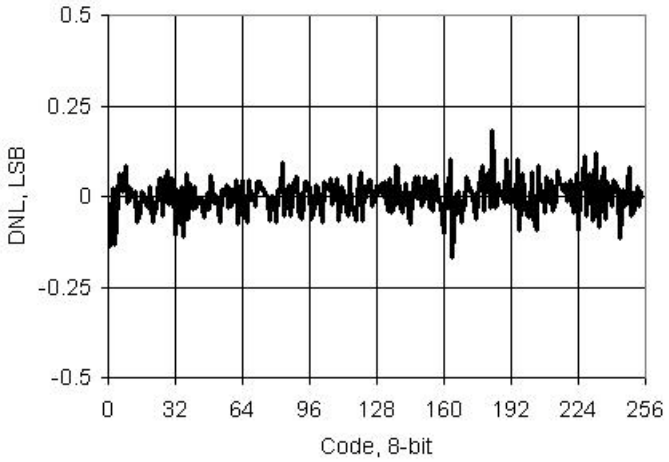

Figure 11-30. IDAC DNL vs Input Code, Range = 255 µA, Sink Mode

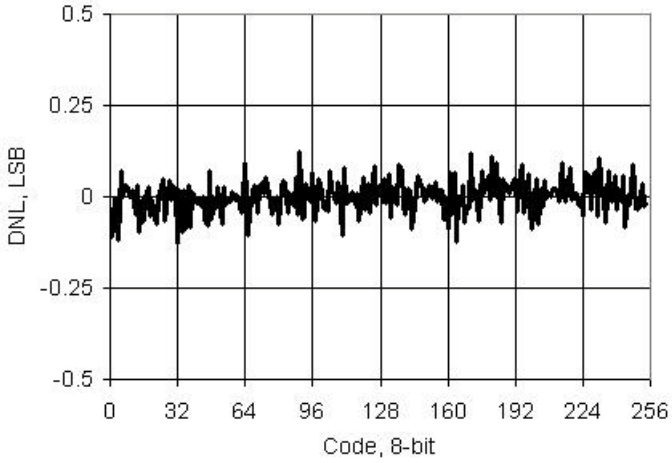

Figure 11-31. IDAC INL vs Temperature, Range = 255 µA, High speed mode

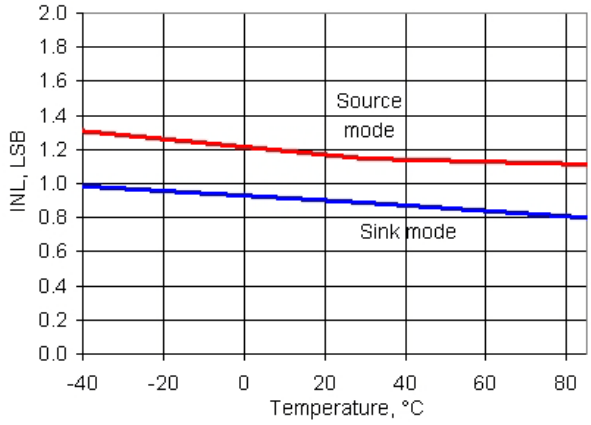

Figure 11-32. IDAC DNL vs Temperature, Range = 255 µA, High speed mode

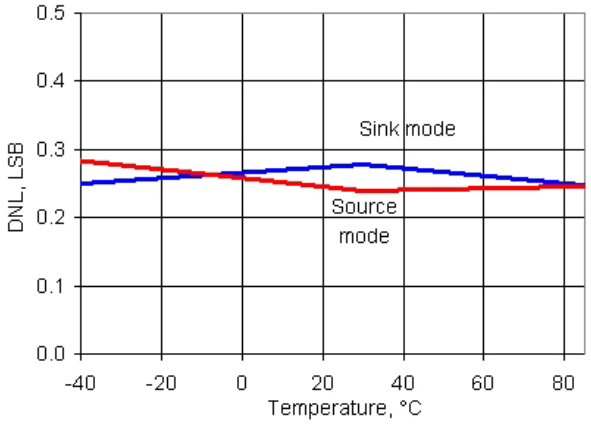

Figure 11-33. IDAC Full Scale Error vs Temperature, Range = 255 µA, Source Mode

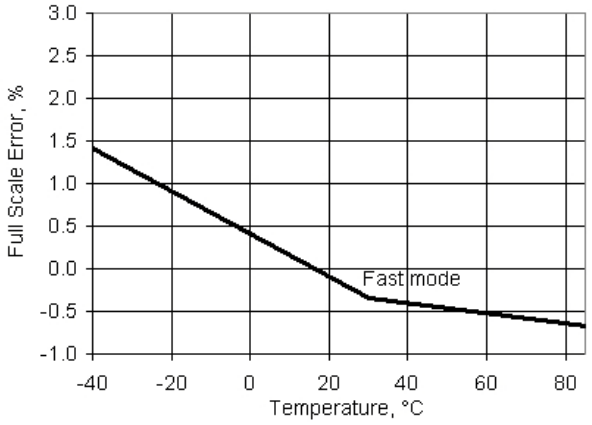

Figure 11-34. IDAC Full Scale Error vs Temperature, Range = 255 µA, Sink Mode

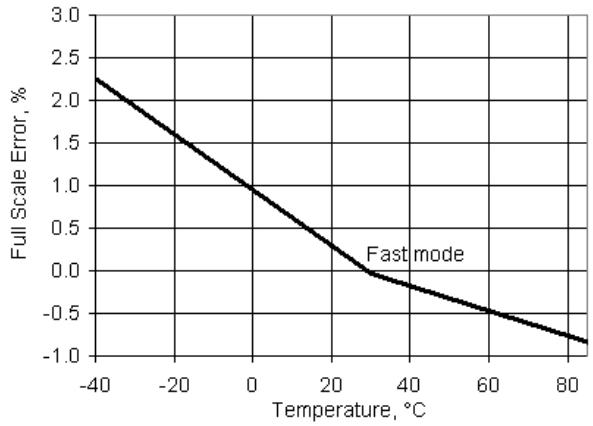

Figure 11-35. IDAC Operating Current vs Temperature, Range = 255 µA, Code = 0, Source Mode

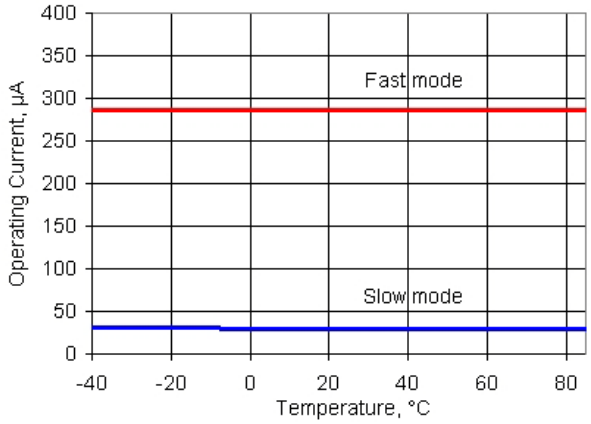

Figure 11-36. IDAC Operating Current vs Temperature, Range = 255 µA, Code = 0, Sink Mode

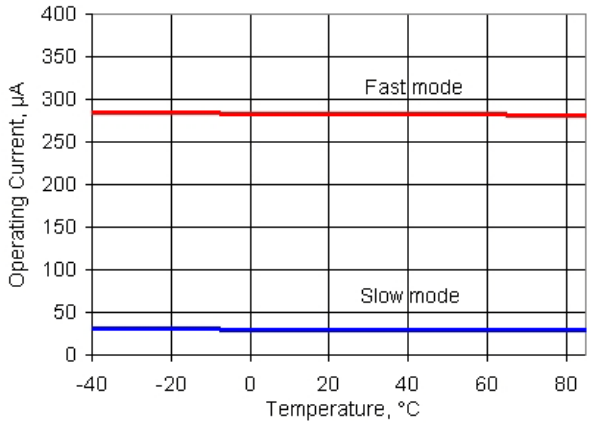

Table 11-25. IDAC (Current Digital-to-Analog Converter) AC Specifications

Parameter	Description	Conditions	Min	Typ	Max	Units
Fdac	Update rate		–	–	8	Msps
T_{SETTLE}	Settling time to 0.5 LSB	Range = 31.875 µA or 255 µA, full scale transition, High speed mode, 600 Ω 15-pF load	–	–	125	ns
	Current noise	Range = 255 µA, source mode, High speed mode, Vdda = 5 V, 10 kHz	–	340	–	pA/sqrtHz

Figure 11-37. IDAC Step Response, Codes 0x40 - 0xC0, 255 µA Mode, Source Mode, High speed mode, Vdda = 5 V

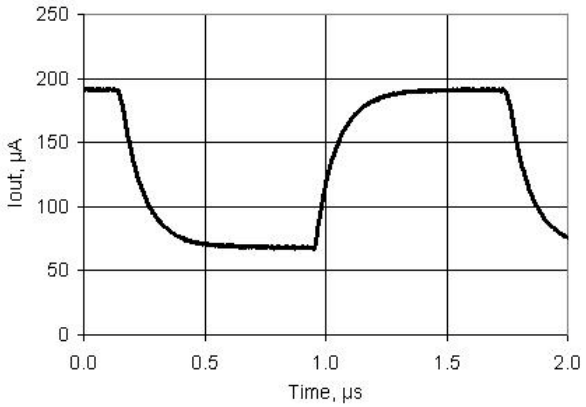

Figure 11-38. IDAC Glitch Response, Codes 0x7F - 0x80, 255 µA Mode, Source Mode, High speed mode, Vdda = 5 V

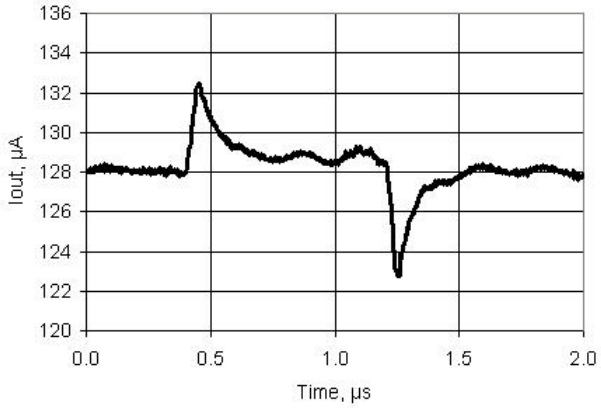

Figure 11-39. IDAC PSRR vs Frequency

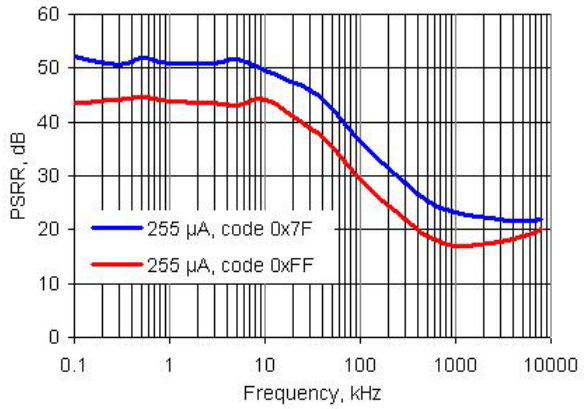

Figure 11-40. IDAC Current Noise, 255 µA Mode, Source Mode, High speed mode, Vdda = 5 V

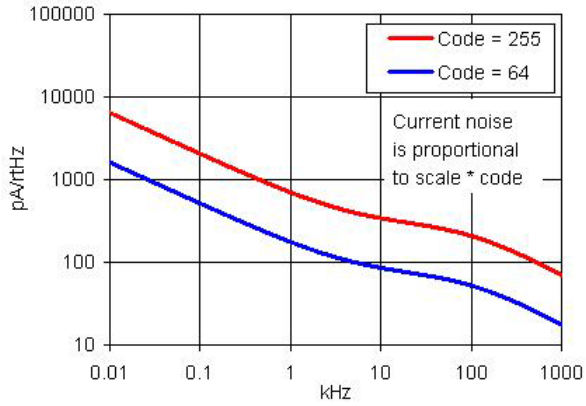

11.5.7 VDAC

Table 11-26. VDAC (Voltage Digital-to-Analog Converter) DC Specifications

Parameter	Description	Conditions	Min	Typ	Max	Units
Resolution			-	8	-	
Rout	Output resistance[29]					
	High	Vout = 4 V	-	16	-	kΩ
	Low	Vout = 1 V	-	4	-	kΩ
Vout	Output voltage range, code = 255	1 V scale	–	1.02	–	V
		4 V scale, Vdda = 5 V	–	4.08	–	V
INL	Integral nonlinearity	1 V scale	–	±2.1	±2.5	LSB
DNL	Differential nonlinearity	1 V scale	–	±0.3	±1	LSB
	Monotonicity		–	–	Yes	–
Eg	Gain error	1 V scale,	–	–	±2.5	%
		4 V scale	–	–	±2.5	%
TC_Eg	Temperature coefficient, gain error	1 V scale,	–	–	0.03	%FSR / °C
		4 V scale	–	–	0.03	%FSR / °C
VDAC_ICC	Operating current	Low speed mode	–	–	100	µA
		High speed mode	–	–	500	µA
V_{OS}	Zero scale error		–	0	±0.9	LSB

Figure 11-41. VDAC INL vs Input Code, 1 V Mode

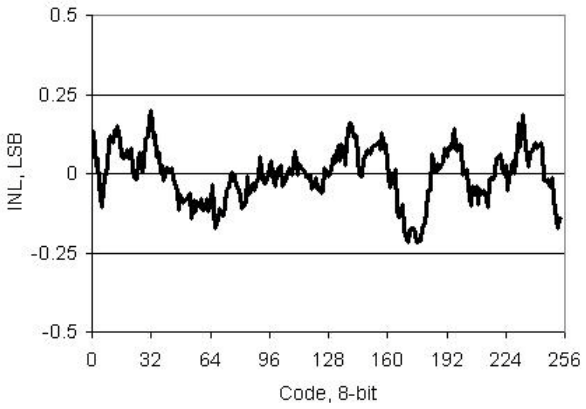

Figure 11-42. VDAC DNL vs Input Code, 1 V Mode

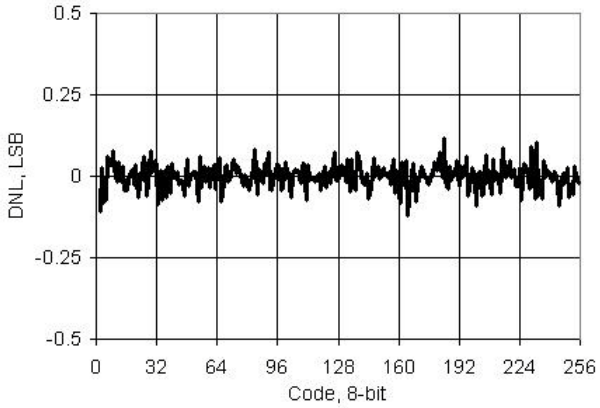

Figure 11-43. VDAC INL vs Temperature, 1 V Mode

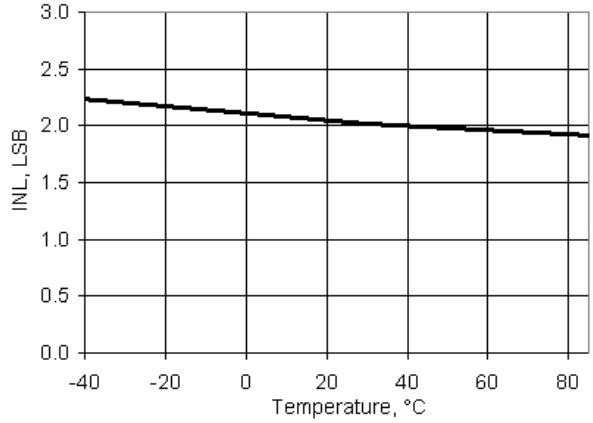

Figure 11-44. VDAC DNL vs Temperature, 1 V Mode

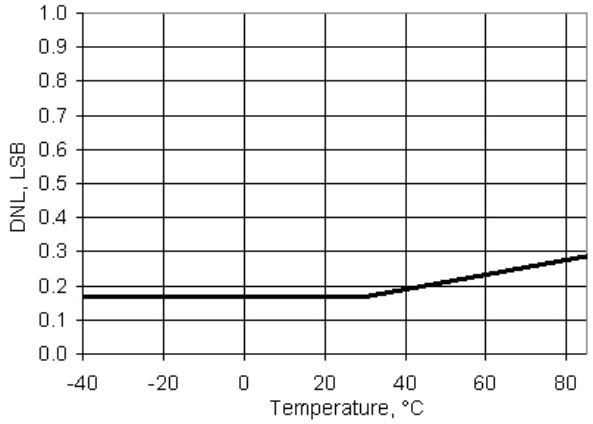

Figure 11-45. VDAC Full Scale Error vs Temperature, 1 V Mode

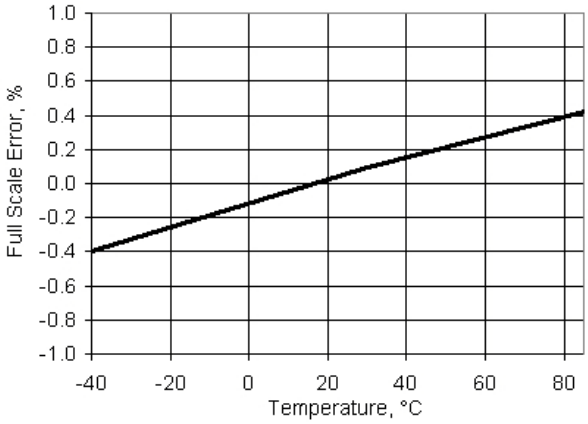

Figure 11-46. VDAC Full Scale Error vs Temperature, 4 V Mode

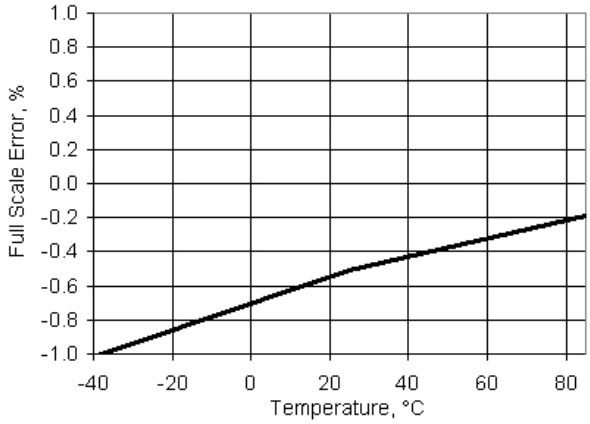

Figure 11-47. VDAC Operating Current vs Temperature, 1V Mode, Low speed mode

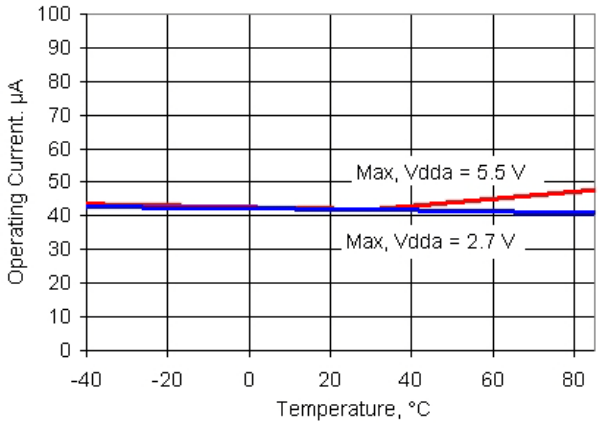

Figure 11-48. VDAC Operating Current vs Temperature, 1 V Mode, High speed mode

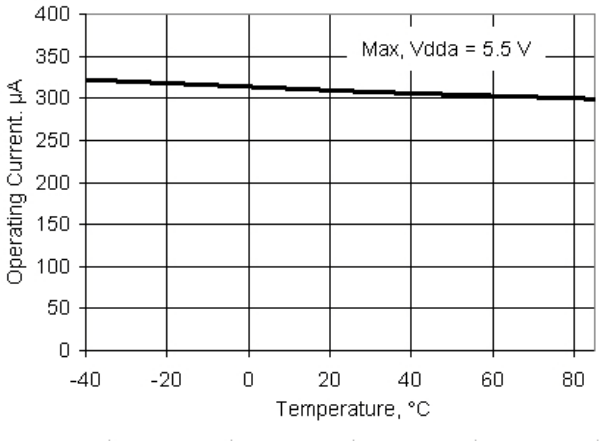

Table 11-27. VDAC (Voltage Digital-to-Analog Converter) AC Specifications

Parameter	Description	Conditions	Min	Typ	Max	Units
Fdac	Update rate[29]	1 V mode	-	-	1	Msps
	Update rate[29]	4 V mode			250	Ksps
TsettleP	Settling time to 0.1%, step 25% to 75%	1 V scale, Cload = 15 pF	–	0.45	1	µs
		4 V scale, Cload = 15 pF	–	0.8	3.2	µs
TsettleN	Settling time to 0.1%, step 75% to 25%	1 V scale, Cload = 15 pF	–	0.45	1	µs
		4 V scale, Cload = 15 pF	–	0.7	3	µs
	Voltage noise	Range = 1 V, High speed mode, Vdda = 5 V, 10 kHz	–	750	–	nV/sqrtHz

Figure 11-49. VDAC Step Response, Codes 0x40 - 0xC0, 1 V Mode, High speed mode, Vdda = 5 V

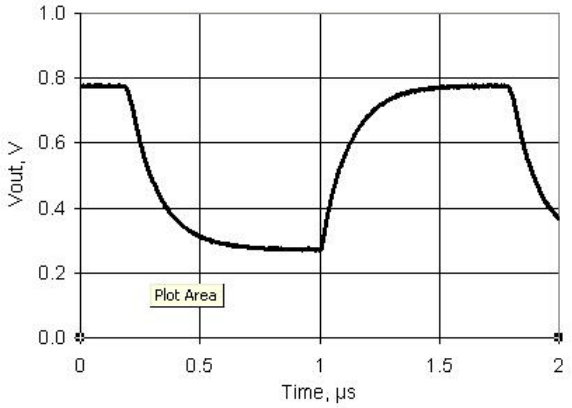

Figure 11-50. VDAC Glitch Response, Codes 0x7F - 0x80, 1 V Mode, High speed mode, Vdda = 5 V

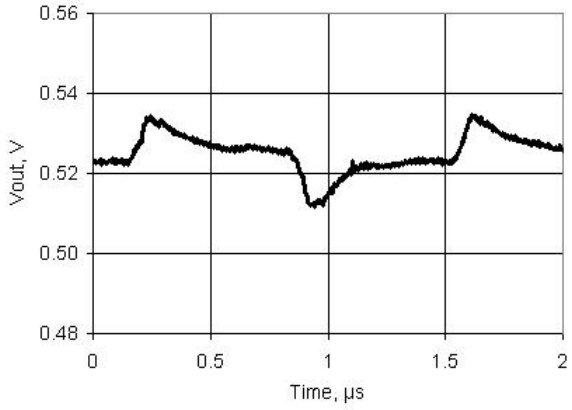

Figure 11-51. VDAC PSRR vs Frequency

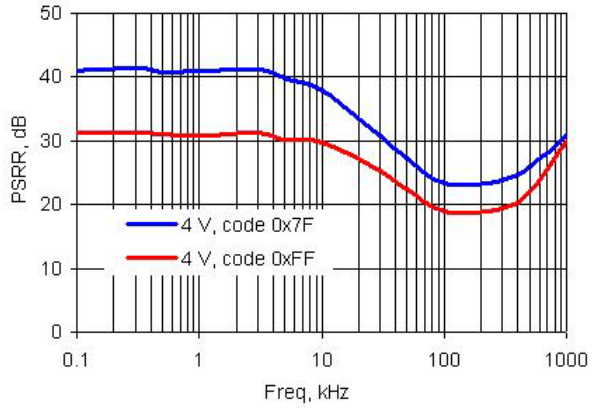

Figure 11-52. VDAC Voltage Noise, 1 V Mode, High speed mode, Vdda = 5 V

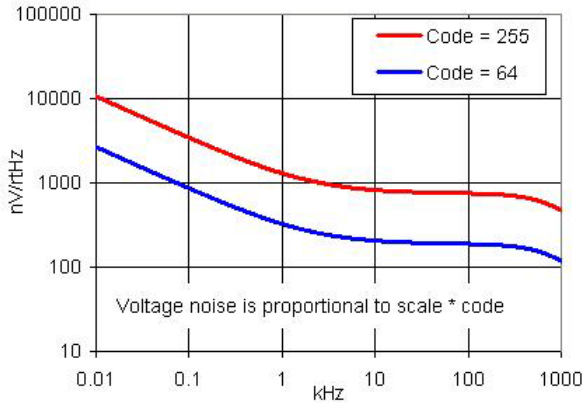

11.5.8 Discrete and Continuous Time Mixer

The mixer is created using a SC/CT analog block; see the Mixer component data sheet in PSoC Creator for full electrical specifications and APIs.

Table 11-28. Mixer DC Specifications

Parameter	Description	Conditions	Min	Typ	Max	Units
V_{OS}	Input offset voltage		–	–	15	mV
	Quiescent current		–	0.9	2	mA
G	Gain		–	0	–	dB

Table 11-29. Mixer AC Specifications

Parameter	Description	Conditions	Min	Typ	Max	Units
f_{LO}	Local oscillator frequency	Down mixer mode	–	–	4	MHz
f_{in}	Input signal frequency	Down mixer mode	–	–	14	MHz
f_{LO}	Local oscillator frequency	Up mixer mode	–	–	1	MHz
f_{in}	Input signal frequency	Up mixer mode	–	–	1	MHz
SR	Slew rate		3	–	–	V/µs

Note
44. Bandwidth is guaranteed for input common mode between 0.3 V and Vdda-1.2 V and for output that is between 0.05 V and Vdda-0.05 V.

11.5.9 Transimpedance Amplifier

The TIA is created using a SC/CT Analog Block, see the TIA component data sheet in PSoC Creator for full AC/DC specifications, and APIs and example code.

Table 11-30. Transimpedance Amplifier (TIA) DC Specifications

Parameter	Description	Conditions	Min	Typ	Max	Units
Vioff	Input offset voltage		-	-	10	mV
Rconv	Conversion resistance[45]					
	R = 20K	40 pF load	-25	-	+35	%
	R = 30K	40 pF load	-25	-	+35	%
	R = 40K	40 pF load	-25	-	+35	%
	R = 80K	40 pF load	-25	-	+35	%
	R = 120K	40 pF load	-25	-	+35	%
	R = 250K	40 pF load	-25	-	+35	%
	R= 500K	40 pF load	-25	-	+35	%
	R = 1M	40 pF load	-25	-	+35	%
	Quiescent current		–	1.1	2	mA

Table 11-31. Transimpedance Amplifier (TIA) AC Specifications

Parameter	Description	Conditions	Min	Typ	Max	Units
BW	Input bandwidth (–3 dB)	R = 20K; –40 pF load	1000	–	–	kHz
		R = 120K; –40 pF load	220	–	–	kHz
		R = 1M; –40 pF load	25	–	–	kHz

Note
45. Conversion resistance values are not calibrated. Calibrated values and details about calibration are provided in PSoC Creator component data sheets. External precision resistors can also be used.

11.5.10 Programmable Gain Amplifier

The PGA is created using a SC/CT Analog Block, see the PGA component data sheet in PSoC Creator for full AC/DC specifications, and APIs and example code.

Unless otherwise specified, operating conditions are:

- Operating temperature = 25 °C for typical values
- Unless otherwise specified, all charts and graphs show typical values

Table 11-32. PGA DC Specifications

Parameter	Description	Conditions	Min	Typ	Max	Units
Vin	Input voltage range	Power mode = minimum	Vssa	–	Vdda	V
Vos	Input offset voltage	Power mode = high, gain = 1	–	–	10	mV
	Gain Error[29]	Non inverting mode, reference = Vssa				
Ge1	Gain = 1	Rin of 40K, -40°C ≤ Ta ≤ 85°C and Tj ≤ 100°C	–	–	±0.15	%
		Rin of 40K, -40°C ≤ Ta ≤ 125°C and Tj ≤ 150°C	–	–	±0.15	%
Ge16	Gain = 16	Rin of 40K, -40°C ≤ Ta ≤ 85°C and Tj ≤ 100°C	–	–	±2.5	%
		Rin of 40K, -40°C ≤ Ta ≤ 125°C and Tj ≤ 150°C	–	–	±4	%
Ge50	Gain = 50	Rin of 40K, -40°C ≤ Ta ≤ 85°C and Tj ≤ 100°C	–	–	±5	%
		Rin of 40K, -40°C ≤ Ta ≤ 125°C and Tj ≤ 150°C	–	–	±6	%
TCVos	Input offset voltage drift with temperature	Power mode = high, gain = 1	–	–	±30	µV/°C
Vonl	DC output nonlinearity	Gain = 1	–	–	±0.01	% of FSR
Cin	Input capacitance		–	–	7	pF
Voh	Output voltage swing	Power mode = high, gain = 1, Rload = 100 kΩ to V_{DDA} / 2	V_{DDA} – 0.15	–	–	V
Vol	Output voltage swing	Power mode = high, gain = 1, Rload = 100 kΩ to V_{DDA} / 2	–	–	V_{SSA} + 0.15	V
Vsrc	Output voltage under load	Iload = 250 µA, Vdda ≥ 2.7V, power mode = high	–	–	300	mV
Idd	Operating current	Power mode = high	–	1.5	1.65	mA
PSRR	Power supply rejection ratio		48	–	–	dB

Figure 11-53. PGA Voffset Histogram, 4096 samples / 1024 parts

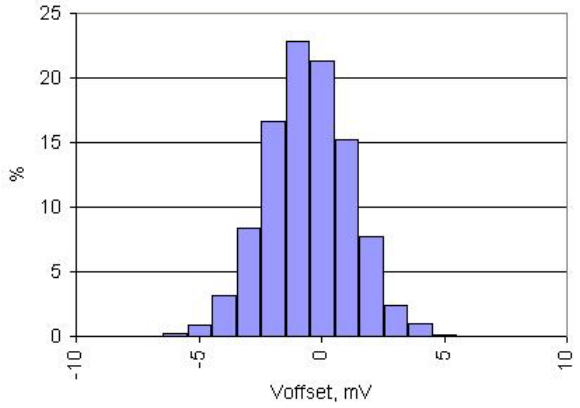

Table 11-33. PGA AC Specifications

Parameter	Description	Conditions	Min	Typ	Max	Units
BW1	–3 dB bandwidth	Power mode = high, gain = 1, input = 100 mV peak-to-peak, Cl = 40 pF	5.5	8	–	MHz
SR1	Slew rate	Power mode = high, gain = 1, 20% to 80%	3	–	–	V/µs
e_n	Input noise density	Power mode = high, Vdda = 5 V, at 100 kHz	–	43	–	nV/sqrtHz

Figure 11-54. Noise vs. Frequency, Vdda = 5 V, Power Mode = High

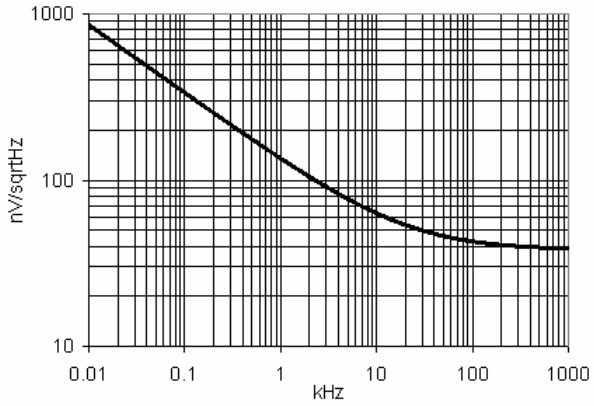

11.5.11 Temperature Sensor

Table 11-34. Temperature Sensor Specifications

Parameter	Description	Conditions	Min	Typ	Max	Units
	Temp sensor accuracy	Range: –40 °C to +150 °C	-	±5	-	°C

11.5.12 LCD Direct Drive

Table 11-35. LCD Direct Drive DC Specifications

Parameter	Description	Conditions	Min	Typ	Max	Units
I_{CC}	LCD system operating current	Device sleep mode with wakeup at 400-Hz rate to refresh LCDs, bus clock = 3 Mhz, Vddio = Vdda = 3 V, 4 commons, 16 segments, 1/4 duty cycle, 50 Hz frame rate, no glass connected	–	38	–	µA
I_{CC_SEG}	Current per segment driver	Strong drive mode	–	260	–	µA
V_{BIAS}	LCD bias range (V_{BIAS} refers to the main output voltage(V0) of LCD DAC)	$V_{DDA} \geq 3$ V and $V_{DDA} \geq V_{BIAS}$	2	–	5	V
	LCD bias step size	$V_{DDA} \geq 3$ V and $V_{DDA} \geq V_{BIAS}$	–	9.1 × V_{DDA}	–	mV
	LCD capacitance per segment/common driver	Drivers may be combined	–	500	5000	pF
	Long term segment offset		–	–	20	mV
I_{OUT}	Output drive current per segment driver)	Vddio = 5.5V, strong drive mode	355	–	710	µA

Table 11-36. LCD Direct Drive AC Specifications

Parameter	Description	Conditions	Min	Typ	Max	Units
f_{LCD}	LCD frame rate		10	50	150	Hz

11.6 Digital Peripherals

Specifications are valid for -40°C ≤ Ta ≤ 125°C and Tj ≤ 150°C, except where noted. Specifications are valid for 1.71 V to 5.5 V, except where noted.

11.6.1 Timer

Table 11-37. Timer DC Specifications

Parameter	Description	Conditions	Min	Typ	Max	Units
	Block current consumption	16-bit timer, at listed input clock frequency	–	–	–	µA
	3 MHz		–	15	–	µA
	12 MHz		–	60	–	µA
	50 MHz		–	260	–	µA
	67 MHz		–	350	–	µA

Table 11-38. Timer AC Specifications

Parameter	Description	Conditions	Min	Typ	Max	Units
	Operating frequency	-40°C ≤ Ta ≤ 85°C and Tj ≤ 100°C	DC	-	67 [46]	MHz
		-40°C ≤ Ta ≤ 125°C and Tj ≤ 150°C	DC	-	50	MHz
	Capture pulse width (Internal)	-40°C ≤ Ta ≤ 85°C and Tj ≤ 100°C	15	-	-	ns
		-40°C ≤ Ta ≤ 125°C and Tj ≤ 150°C	21	-	-	ns
	Capture pulse width (external)	-40°C ≤ Ta ≤ 85°C and Tj ≤ 100°C	30	-	-	ns
		-40°C ≤ Ta ≤ 125°C and Tj ≤ 150°C	42	-	-	ns
	Timer resolution	-40°C ≤ Ta ≤ 85°C and Tj ≤ 100°C	15	-	-	ns
		-40°C ≤ Ta ≤ 125°C and Tj ≤ 150°C	21	-	-	ns
	Enable pulse width	-40°C ≤ Ta ≤ 85°C and Tj ≤ 100°C	15	-	-	ns
		-40°C ≤ Ta ≤ 125°C and Tj ≤ 150°C	21	-	-	ns
	Enable pulse width (external)	-40°C ≤ Ta ≤ 85°C and Tj ≤ 100°C	30	-	-	ns
		-40°C ≤ Ta ≤ 125°C and Tj ≤ 150°C	42	-	-	ns
	Reset pulse width	-40°C ≤ Ta ≤ 85°C and Tj ≤ 100°C	15	-	-	ns
		-40°C ≤ Ta ≤ 125°C and Tj ≤ 150°C	21	-	-	ns
	Reset pulse width (external)	-40°C ≤ Ta ≤ 85°C and Tj ≤ 100°C	30	-	-	ns
		-40°C ≤ Ta ≤ 125°C and Tj ≤ 150°C	42	-	-	ns

Note
46. Applicable at -40°C to 85°C; 50 MHz at -40°C to 125°C.

11.6.2 Counter

Table 11-39. Counter DC Specifications

Parameter	Description	Conditions	Min	Typ	Max	Units
	Block current consumption	16-bit counter, at listed input clock frequency	–	–	–	µA
	3 MHz		–	15	–	µA
	12 MHz		–	60	–	µA
	50 MHz		–	260	–	µA
	67 MHz		–	350	–	µA

Table 11-40. Counter AC Specifications

Parameter	Description	Conditions	Min	Typ	Max	Units
	Operating frequency	-40°C ≤ Ta ≤ 85°C and Tj ≤ 100°C	DC	-	67[47]	MHz
		-40°C ≤ Ta ≤ 125°C and Tj ≤ 150°C	DC	-	50	MHz
	Capture pulse	-40°C ≤ Ta ≤ 85°C and Tj ≤ 100°C	15	-	-	ns
		-40°C ≤ Ta ≤ 125°C and Tj ≤ 150°C	21	-	-	ns
	Resolution	-40°C ≤ Ta ≤ 85°C and Tj ≤ 100°C	15	-	-	ns
		-40°C ≤ Ta ≤ 125°C and Tj ≤ 150°C	21	-	-	ns
	Pulse width	-40°C ≤ Ta ≤ 85°C and Tj ≤ 100°C	15	-	-	ns
		-40°C ≤ Ta ≤ 125°C and Tj ≤ 150°C	21	-	-	ns
	Pulse width (external)	-40°C ≤ Ta ≤ 85°C and Tj ≤ 100°C	30	-	-	ns
		-40°C ≤ Ta ≤ 125°C and Tj ≤ 150°C	42	-	-	ns
	Enable pulse width	-40°C ≤ Ta ≤ 85°C and Tj ≤ 100°C	15	-	-	ns
		-40°C ≤ Ta ≤ 125°C and Tj ≤ 150°C	21	-	-	ns
	Enable pulse width (external)	-40°C ≤ Ta ≤ 85°C and Tj ≤ 100°C	30	-	-	ns
		-40°C ≤ Ta ≤ 125°C and Tj ≤ 150°C	42	-	-	ns
	Reset pulse width	-40°C ≤ Ta ≤ 85°C and Tj ≤ 100°C	15	-	-	ns
		-40°C ≤ Ta ≤ 125°C and Tj ≤ 150°C	21	-	-	ns
	Reset pulse width (external)	-40°C ≤ Ta ≤ 85°C and Tj ≤ 100°C	30	-	-	ns
		-40°C ≤ Ta ≤ 125°C and Tj ≤ 150°C	42	-	-	ns

Note
47. Applicable at -40°C to 85°C; 50 MHz at -40°C to 125°C.

11.6.3 Pulse Width Modulation

Table 11-41. PWM DC Specifications

Parameter	Description	Conditions	Min	Typ	Max	Units
	Block current consumption	16-bit PWM, at listed input clock frequency	–	–	–	µA
	3 MHz		–	15	–	µA
	12 MHz		–	60	–	µA
	50 MHz		–	260	–	µA
	67 MHz		–	350	–	µA

Table 11-42. Pulse Width Modulation (PWM) AC Specifications

Parameter	Description	Conditions	Min	Typ	Max	Units
	Operating frequency	-40°C ≤ Ta ≤ 85°C and Tj ≤ 100°C	DC	-	67 [48]	MHz
		-40°C ≤ Ta ≤ 125°C and Tj ≤ 150°C	DC	-	50	MHz
	Pulse width	-40°C ≤ Ta ≤ 85°C and Tj ≤ 100°C	15	-	-	ns
		-40°C ≤ Ta ≤ 125°C and Tj ≤ 150°C	21	-	-	ns
	Pulse width (external)	-40°C ≤ Ta ≤ 85°C and Tj ≤ 100°C	30	-	-	ns
		-40°C ≤ Ta ≤ 125°C and Tj ≤ 150°C	42	-	-	ns
	Kill pulse width	-40°C ≤ Ta ≤ 85°C and Tj ≤ 100°C	15	-	-	ns
		-40°C ≤ Ta ≤ 125°C and Tj ≤ 150°C	21	-	-	ns
	Kill pulse width (external)	-40°C ≤ Ta ≤ 85°C and Tj ≤ 100°C	30			ns
		-40°C ≤ Ta ≤ 125°C and Tj ≤ 150°C	42	-	-	ns
	Enable pulse width	-40°C ≤ Ta ≤ 85°C and Tj ≤ 100°C	15	-	-	ns
		-40°C ≤ Ta ≤ 125°C and Tj ≤ 150°C	21	-	-	ns
	Enable pulse width (external)	-40°C ≤ Ta ≤ 85°C and Tj ≤ 100°C	30	-	-	ns
		-40°C ≤ Ta ≤ 125°C and Tj ≤ 150°C	42	-	-	ns
	Reset pulse width	-40°C ≤ Ta ≤ 85°C and Tj ≤ 100°C	15	-	-	ns
		-40°C ≤ Ta ≤ 125°C and Tj ≤ 150°C	21	-	-	ns
	Reset pulse width (external)	-40°C ≤ Ta ≤ 85°C and Tj ≤ 100°C	30	-	-	ns
		-40°C ≤ Ta ≤ 125°C and Tj ≤ 150°C	42	-	-	ns

Note
48. Applicable at -40°C to 85°C; 50 MHz at -40°C to 125°C.

11.6.4 I^2C

Table 11-43. Fixed I^2C DC Specifications

Parameter	Description	Conditions	Min	Typ	Max	Units
	Block current consumption	Enabled, configured for 100 kbps	–	–	250	µA
	–	Enabled, configured for 400 kbps	–	–	260	µA
	–	Wake from sleep mode	–	–	30	µA

Table 11-44. Fixed I^2C AC Specifications

Parameter	Description	Conditions	Min	Typ	Max	Units
	Bit rate		-	-	1	Mbps

11.6.5 Controller Area Network[49]

Table 11-45. CAN DC Specifications

Parameter	Description	Conditions	Min	Typ	Max	Units
	Block current consumption	500 kbps	-	-	285	µA
		1 Mbps	-	-	330	µA

Table 11-46. CAN AC Specifications

Parameter	Description	Conditions	Min	Typ	Max	Units
	Bit rate	Minimum 8 MHz clock	-	-	1	Mbit

11.6.6 Digital Filter Block

Table 11-47. DFB DC Specifications

Parameter	Description	Conditions	Min	Typ	Max	Units
	DFB operating current	64-tap FIR at Fdfb				
		500 kHz (6.7 ksps)	-	0.16	0.27	mA
		1 MHz (13.4 ksps)	-	0.33	0.53	mA
		10 MHz (134 ksps)	-	3.3	5.3	mA
		50 MHz (644 ksps)	-	15.7	25.5	mA
		67 MHz (900 ksps)[50]	-	21.8	35.6	mA

Table 11-48. DFB AC Specifications

Parameter	Description	Conditions	Min	Typ	Max	Units
Fdfb	DFB operating frequency	-40°C ≤ Ta ≤ 85°C and Tj ≤ 100°C	DC	-	67 [50]	MHz
		-40°C ≤ Ta ≤ 125°C and Tj ≤ 150°C	DC	-	50 [50]	MHz

Note
49. Refer to ISO 11898 specification for details.
50. Applicable at -40°C to 85°C; 50 MHz at -40°C to 125°C.

11.6.7 USB

Table 11-49. USB DC Specifications

Parameter	Description	Conditions	Min	Typ	Max	Units
V_{USB_5}	Device supply for USB operation	USB configured, USB regulator enabled	4.35	–	5.25	V
$V_{USB_3.3}$		USB configured, USB regulator bypassed	3.15	–	3.6	V
V_{USB_3}		USB configured, USB regulator bypassed[51]	2.85	–	3.6	V
$I_{USB_Configured}$	Device supply current in device active mode, bus clock and IMO = 24 MHz	V_{DDD} = 5 V, F_{CPU} = 1.5 MHz	–	10	–	mA
		V_{DDD} = 3.3 V, F_{CPU} = 1.5 MHz	–	8	–	mA
$I_{USB_Suspended}$	Device supply current in device sleep mode	V_{DDD} = 5 V, connected to USB host, PICU configured to wake on USB resume signal	–	0.5	–	mA
		V_{DDD} = 5 V, disconnected from USB host	–	0.3	–	mA
		V_{DDD} = 3.3 V, connected to USB host, PICU configured to wake on USB resume signal	–	0.5	–	mA
		V_{DDD} = 3.3 V, disconnected from USB host	–	0.3	–	mA

11.6.8 Universal Digital Blocks (UDBs)

PSoC Creator provides a library of pre-built and tested standard digital peripherals (UART, SPI, LIN, PRS, CRC, timer, counter, PWM, AND, OR, and so on) that are mapped to the UDB array. See the component data sheets in PSoC Creator for full AC/DC specifications, APIs, and example code.

Table 11-50. UDB AC Specifications

Parameter	Description	Conditions	Min	Typ	Max	Units
Datapath Performance						
Fmax_timer	Maximum frequency of 16-bit timer in a UDB pair	-40°C ≤ Ta ≤ 85°C and Tj ≤ 100°C	-	-	67	MHz
		-40°C ≤ Ta ≤ 125°C and Tj ≤ 150°C	-	-	50	MHz
Fmax_adder	Maximum frequency of 16-bit adder in a UDB pair	-40°C ≤ Ta ≤ 85°C and Tj ≤ 100°C	-	-	67	MHz
		-40°C ≤ Ta ≤ 125°C and Tj ≤ 150°C	-	-	50	MHz
Fmax_CRC	Maximum frequency of 16-bit CRC/PRS in a UDB pair	-40°C ≤ Ta ≤ 85°C and Tj ≤ 100°C	-	-	67	MHz
		-40°C ≤ Ta ≤ 125°C and Tj ≤ 150°C	-	-	50	MHz
PLD Performance						
Fmax_PLD	Maximum frequency of a two-pass PLD function in a UDB pair	-40°C ≤ Ta ≤ 85°C and Tj ≤ 100°C	-	-	67	MHz
		-40°C ≤ Ta ≤ 125°C and Tj ≤ 150°C	-	-	50	MHz
Clock to Output Performance						
t_{clk_out}	Propogation delay for clock in to data out, see Figure 11-55.	25 °C, Vddd ≥ 2.7 V	-	20	25	ns
t_{clk_out}	Propogation delay for clock in to data out, see Figure 11-55.	Worst-case placement, routing, and pin selection	-	–	55	ns

Note
51. Rise/fall time matching (TR) not guaranteed, see .

Figure 11-55. Clock to Output Performance

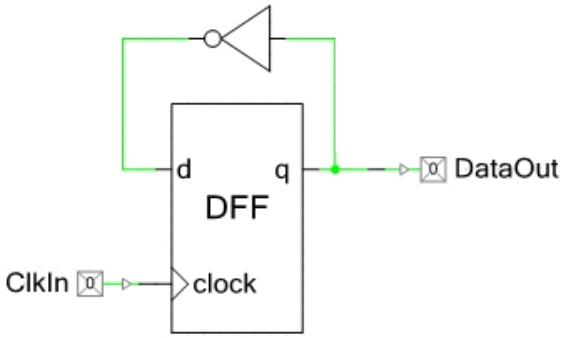

11.7 Memory

Specifications are valid for -40°C ≤ Ta ≤ 125°C and Tj ≤ 150°C, except where noted. Specifications are valid for 1.71 V to 5.5 V, except where noted.

11.7.1 Flash

Table 11-51. Flash DC Specifications

Parameter	Description	Conditions	Min	Typ	Max	Units
	Erase and program voltage	Vddd pin	1.71	-	5.5	V

Table 11-52. Flash AC Specifications

Parameter	Description	Conditions	Min	Typ	Max	Units
Twrite	Block write time (erase + program)	-40°C ≤ Ta ≤ 85°C and Tj ≤ 100°C	-	-	15	ms
		-40°C ≤ Ta ≤ 125°C and Tj ≤ 140°C	-	-	15	ms
Terase	Block erase time	-40°C ≤ Ta ≤ 85°C and Tj ≤ 100°C	-	-	10	ms
		-40°C ≤ Ta ≤ 125°C and Tj ≤ 140°C	-	-	10	ms
	Block program time	-40°C ≤ Ta ≤ 85°C and Tj ≤ 100°C	-	-	5	ms
		-40°C ≤ Ta ≤ 125°C and Tj ≤ 140°C	-	-	5	ms
Tbulk	Bulk erase time (16 KB to 64 KB)[52]	-40°C ≤ Ta ≤ 85°C and Tj ≤ 100°C	-	-	35	ms
		-40°C ≤ Ta ≤ 125°C and Tj ≤ 140°C	-	-	TBD	ms
	Sector erase time (8 KB to 16 KB)[52]	-40°C ≤ Ta ≤ 85°C and Tj ≤ 100°C	-	-	15	ms
		-40°C ≤ Ta ≤ 125°C and Tj ≤ 140°C	-	-	15	ms
	Total device program time (including JTAG, etc.)	No overhead [53]	-	-	5	seconds
	Flash data retention time, retention period measured from last erase cycle [54]	Average ambient temp. $T_A \le 55$ °C, 100 K erase/program cycles	20	–	–	years
		Retention period measured from last erase cycle after 100k progra/erase cycles at $T_A \le 85$ °C	10	–	–	

Notes
52. ECC not included.
53. See PSoC® 3 Device Programming Specifications for a description of a low-overhead method of programming PSoC 3 flash. (Please take care of Foot note numbers)
54. Cypress provides a retention calculator to calculate the retention lifetime based on customers' individual temperature profiles for operation over the –40 °C to +125 °C ambient temperature range. Contact customercare@cypress.com.

11.7.2 EEPROM

Table 11-53. EEPROM DC Specifications

Parameter	Description	Conditions	Min	Typ	Max	Units
	Erase and program voltage		1.71	-	5.5	V

Table 11-54. EEPROM AC Specifications

Parameter	Description	Conditions	Min	Typ	Max	Units
T_{WRITE}	Single row erase/write cycle time		–	2	20	ms
	EEPROM data retention time, retention period measured from last erase cycle	Average ambient temp, $T_A \leq 25$ °C, 1M erase/program cycles	20	–	–	years
		Average ambient temp, $T_A \leq 55$ °C, 100 K erase/program cycles	20	–	–	
		Average ambient temp. $T_A \leq 85$ °C, 10 K erase/program cycles	10	–	–	

11.7.3 Nonvolatile Latches (NVL)

Table 11-55. NVL DC Specifications

Parameter	Description	Conditions	Min	Typ	Max	Units
	Erase and program voltage	Vddd pin	1.71	-	5.5	V

Table 11-56. NVL AC Specifications

Parameter	Description	Conditions	Min	Typ	Max	Units
	NVL endurance	Programmed at 25°C	1K	-	-	program/ erase cycles
		Programmed at 0-70°C	100	-	-	program/ erase cycles
	NVL data retention time	Programmed at 55°C	20	-	-	years
		Programmed at 0-70°C	10	-	-	years

11.7.4 SRAM

Table 11-57. SRAM DC Specifications

Parameter	Description	Conditions	Min	Typ	Max	Units
Vsram	SRAM retention voltage		1.2	-	-	V

Table 11-58. SRAM AC Specifications

Parameter	Description	Conditions	Min	Typ	Max	Units
Fsram	SRAM operating frequency	-40°C ≤ Ta ≤ 85°C and Tj ≤ 100°C	DC	-	67	MHz
		-40°C ≤ Ta ≤ 125°C and Tj ≤ 150°C	DC	-	50	MHz

11.7.5 External Memory Interface

Figure 11-56. Asynchronous Read Cycle Timing

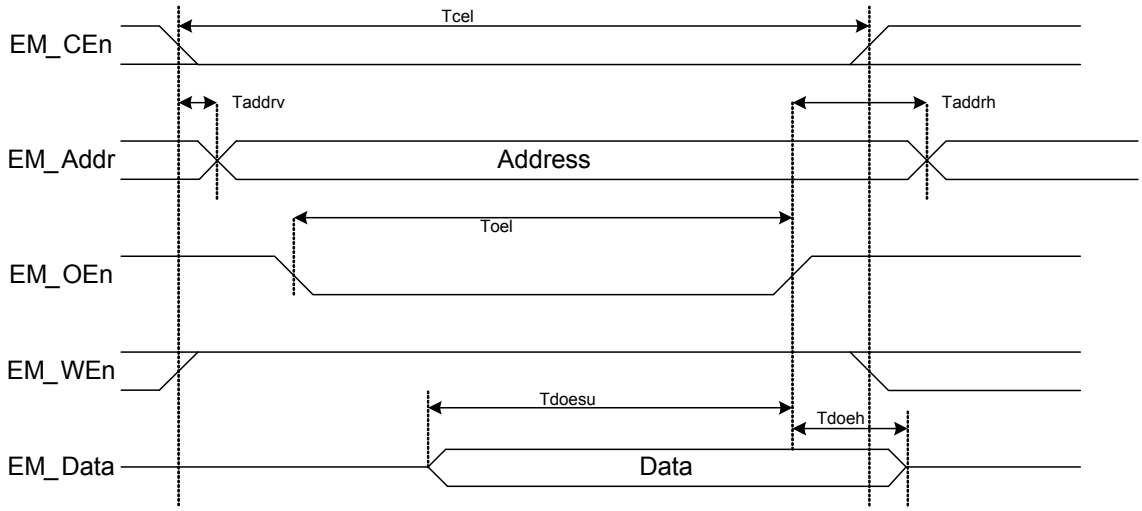

Table 11-59. Asynchronous Read Cycle Specifications

Parameter	Description	Conditions	Min	Typ	Max	Units
T	EMIF clock period[55]	Vdda ≥ 3.3 V	30.3	–	–	ns
Tcel	EM_CEn low time		2T – 5	–	2T+ 5	ns
Taddrv	EM_CEn low to EM_Addr valid		–	–	5	ns
Taddrh	Address hold time after EM_Wen high		T	–	–	ns
Toel	EM_OEn low time		2T – 5	–	2T + 5	ns
Tdoesu	Data to EM_OEn high setup time		T + 15	–	–	ns
Tdoeh	Data hold time after EM_OEn high		3	–	–	ns

Note
55. Limited by GPIO output frequency, see .

Figure 11-57. Asynchronous Write Cycle Timing

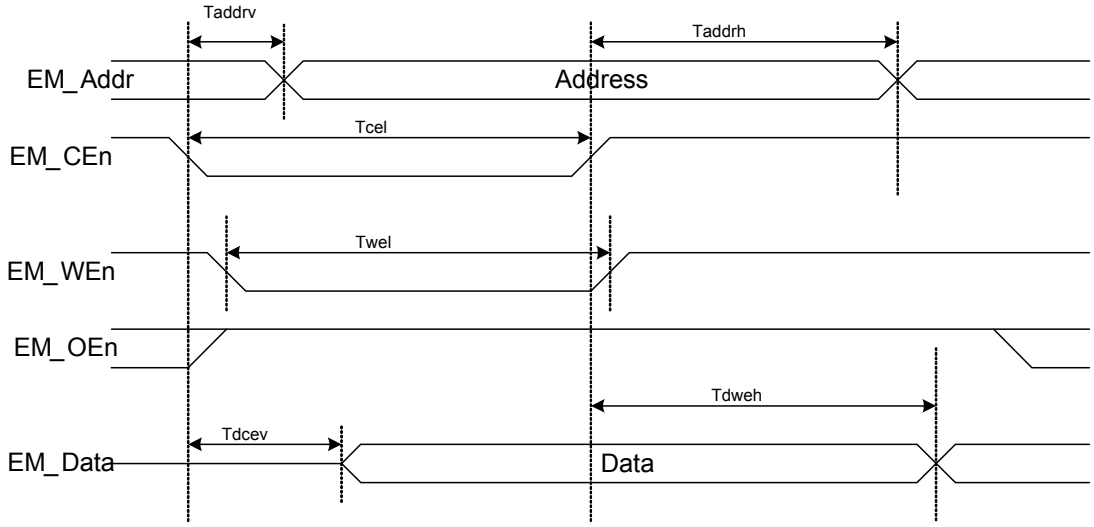

Table 11-60. Asynchronous Write Cycle Specifications

Parameter	Description	Conditions	Min	Typ	Max	Units
T	EMIF clock period[55]	Vdda ≥ 3.3 V	30.3	–	–	ns
Tcel	EM_CEn low time		T – 5	–	T + 5	ns
Taddrv	EM_CEn low to EM_Addr valid		–	–	5	ns
Taddrh	Address hold time after EM_WEn high		T	–	–	ns
Twel	EM_WEn low time		T – 5	–	T + 5	ns
Tdcev	EM_CEn low to data valid		–	–	7	ns
Tdweh	Data hold time after EM_WEn high		T	–	–	ns

Figure 11-58. Synchronous Read Cycle Timing

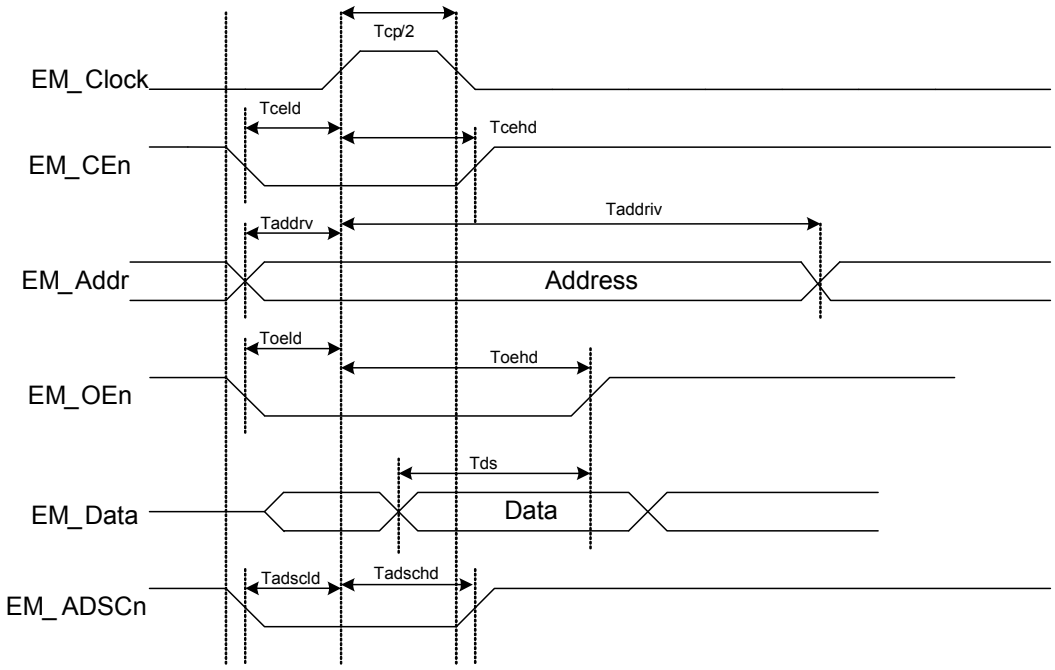

Table 11-61. Synchronous Read Cycle Specifications

Parameter	Description	Conditions	Min	Typ	Max	Units
T	EMIF clock period[56]	Vdda ≥ 3.3 V	30.3	–	–	ns
Tcp/2	EM_Clock pulse high		T/2	–	–	ns
Tceld	EM_CEn low to EM_Clock high		5	–	–	ns
Tcehd	EM_Clock high to EM_CEn high		T/2 – 5	–	–	ns
Taddrv	EM_Addr valid to EM_Clock high		5	–	–	ns
Taddriv	EM_Clock high to EM_Addr invalid		T/2 – 5	–	–	ns
Toeld	EM_OEn low to EM_Clock high		5	–	–	ns
Toehd	EM_Clock high to EM_OEn high		T	–	–	ns
Tds	Data valid before EM_OEn high		T + 15	–	–	ns
Tadscld	EM_ADSCn low to EM_Clock high		5	–	–	ns
Tadschd	EM_Clock high to EM_ADSCn high		T/2 – 5	–	–	ns

Note
56. Limited by GPIO output frequency, see .

Figure 11-59. Synchronous Write Cycle Timing

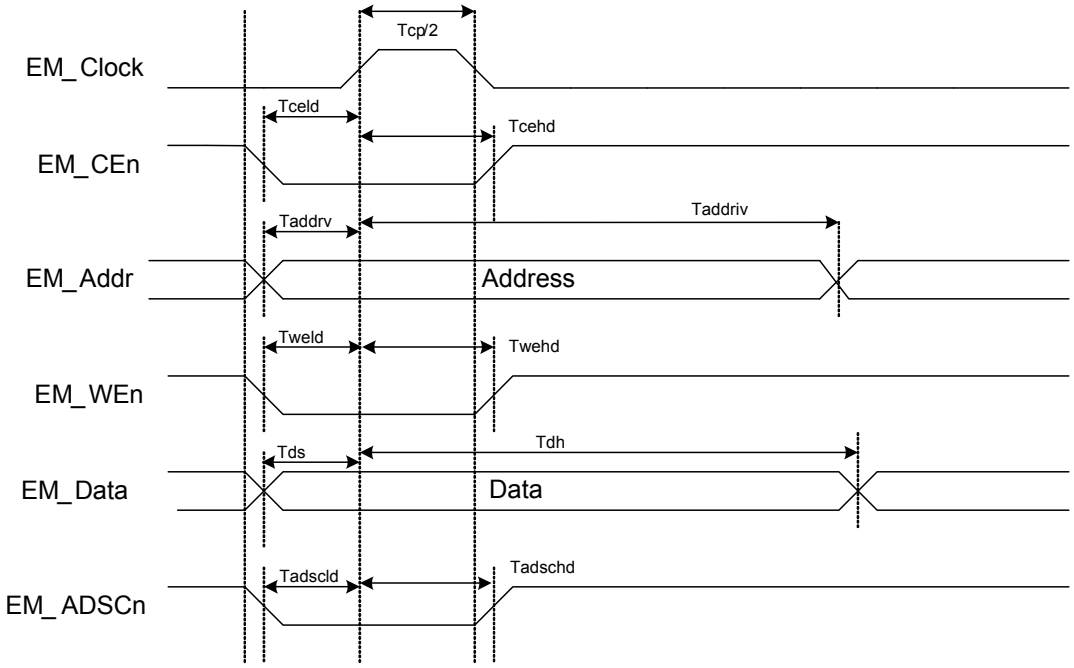

Table 11-62. Synchronous Write Cycle Specifications

Parameter	Description	Conditions	Min	Typ	Max	Units
T	EMIF clock Period[57]	Vdda ≥ 3.3 V	30.3	–	–	ns
Tcp/2	EM_Clock pulse high		T/2	–	–	ns
Tceld	EM_CEn low to EM_Clock high		5	–	–	ns
Tcehd	EM_Clock high to EM_CEn high		T/2 – 5	–	–	ns
Taddrv	EM_Addr valid to EM_Clock high		5	–	–	ns
Taddriv	EM_Clock high to EM_Addr invalid		T/2 – 5	–	–	ns
Tweld	EM_WEn low to EM_Clock high		5	–	–	ns
Twehd	EM_Clock high to EM_WEn high		T/2 – 5	–	–	ns
Tds	Data valid before EM_Clock high		5	–	–	ns
Tdh	Data invalid after EM_Clock high		T	–	–	ns
Tadscld	EM_ADSCn low to EM_Clock high		5	–	–	ns
Tadschd	EM_Clock high to EM_ADSCn high		T/2 – 5	–	–	ns

Note
57. Limited by GPIO output frequency, see .

11.8 PSoC System Resources

Specifications are valid for -40°C ≤ Ta ≤ 125°C and Tj ≤ 150°C, except where noted. Specifications are valid for 1.71 V to 5.5 V, except where noted.

11.8.1 POR with Brown Out

For brown out detect in regulated mode, Vddd and Vdda must be ≥ 2.0 V. Brown out detect is available in externally regulated mode.

Table 11-63. Precise Power On Reset (PRES) with Brown Out DC Specifications

Parameter	Description	Conditions	Min	Typ	Max	Units
PRESR	Rising trip voltage	Factory trim	1.64	–	1.68	V
PRESF	Falling trip voltage		1.62	–	1.66	V

Table 11-64. Precise Power On Reset (PRES) with Brown Out AC Specifications

Parameter	Description	Conditions	Min	Typ	Max	Units
PRES_TR	Response time		–	–	0.5	µs
	V_{DDD}/V_{DDA} droop rate	Sleep mode	–	5	–	V/sec

11.8.2 Voltage Monitors

Table 11-65. Voltage Monitors DC Specifications

Parameter	Description	Conditions	Min	Typ	Max	Units
LVI	Trip voltage					
	LVI_A/D_SEL[3:0] = 0000b		1.68	1.73	1.77	V
	LVI_A/D_SEL[3:0] = 0001b		1.89	1.95	2.01	V
	LVI_A/D_SEL[3:0] = 0010b		2.14	2.20	2.27	V
	LVI_A/D_SEL[3:0] = 0011b		2.38	2.45	2.53	V
	LVI_A/D_SEL[3:0] = 0100b		2.62	2.71	2.79	V
	LVI_A/D_SEL[3:0] = 0101b		2.87	2.95	3.04	V
	LVI_A/D_SEL[3:0] = 0110b		3.11	3.21	3.31	V
	LVI_A/D_SEL[3:0] = 0111b		3.35	3.46	3.56	V
	LVI_A/D_SEL[3:0] = 1000b		3.59	3.70	3.81	V
	LVI_A/D_SEL[3:0] = 1001b		3.84	3.95	4.07	V
	LVI_A/D_SEL[3:0] = 1010b		4.08	4.20	4.33	V
	LVI_A/D_SEL[3:0] = 1011b		4.32	4.45	4.59	V
	LVI_A/D_SEL[3:0] = 1100b		4.56	4.70	4.84	V
	LVI_A/D_SEL[3:0] = 1101b		4.83	4.98	5.13	V
	LVI_A/D_SEL[3:0] = 1110b		5.05	5.21	5.37	V
	LVI_A/D_SEL[3:0] = 1111b		5.30	5.47	5.63	V
HVI	Trip voltage		5.57	5.75	5.92	V

Table 11-66. Voltage Monitors AC Specifications

Parameter	Description	Conditions	Min	Typ	Max	Units
	Response time[58]		–	–	1	µs

Note
58. Based on device characterization (Not production tested).

11.8.3 Interrupt Controller

Table 11-67. Interrupt Controller AC Specifications

Parameter	Description	Conditions	Min	Typ	Max	Units
	Delay from Interrupt signal input to ISR code execution from ISR code	Includes worse case completion of longest instruction DIV with 6 cycles	-	-	25	Tcy CPU

11.8.4 JTAG Interface

Table 11-68. JTAG Interface AC Specifications[29]

Parameter	Description	Conditions	Min	Typ	Max	Units
f_TCK	TCK frequency	3.3 V ≤ V_{DDD} ≤ 5 V	–	–	14[59]	MHz
		1.71 V ≤ V_{DDD} < 3.3 V	–	–	7[59]	MHz
T_TDI_setup	TDI setup before TCK high		(T/10) – 5	–	–	ns
T_TMS_setup	TMS setup before TCK high		T/4	–	–	
T_TDI_hold	TDI, TMS hold after TCK high	T = 1/f_TCK max	T/4	–	–	
T_TDO_valid	TCK low to TDO valid	T = 1/f_TCK max	–	–	2T/5	
T_TDO_hold	TDO hold after TCK high	T = 1/f_TCK max	T/4	–	–	

Figure 11-60. JTAG Interface Timing

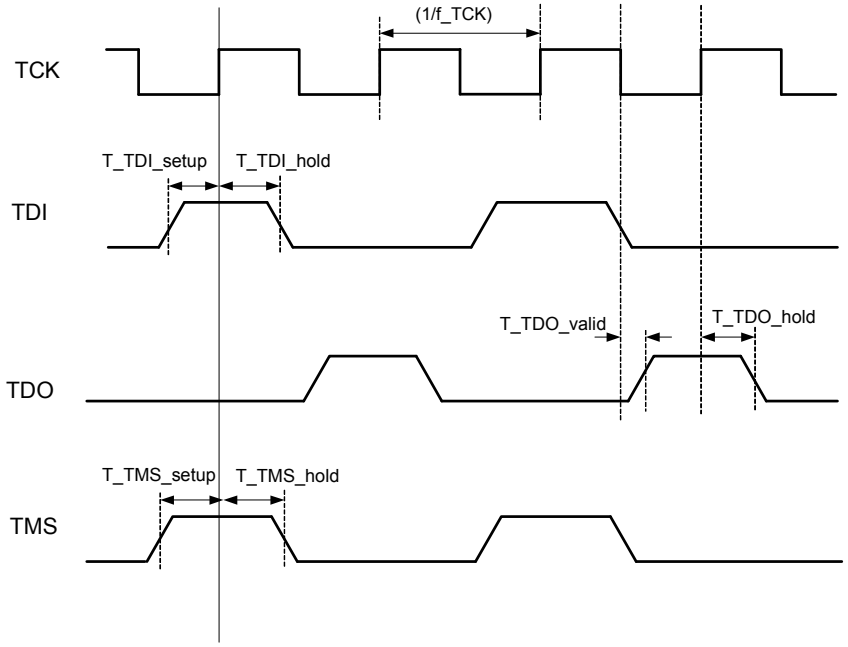

11.8.5 SWD Interface

Table 11-69. SWD Interface AC Specifications[29]

Parameter	Description	Conditions	Min	Typ	Max	Units
f_SWDCK	SWDCLK frequency	3.3 V ≤ V_{DDD} ≤ 5 V	–	–	14[60]	MHz
		1.71 V ≤ V_{DDD} < 3.3 V	–	–	7[60]	MHz
		1.71 V ≤ V_{DDD} < 3.3 V, SWD over USBIO pins	–	–	5.5[60]	MHz
T_SWDI_setup	SWDIO input setup before SWDCK high	T = 1/f_SWDCK max	T/4	–	–	
T_SWDI_hold	SWDIO input hold after SWDCK high	T = 1/f_SWDCK max	T/4	–	–	
T_SWDO_valid	SWDCK high to SWDIO output	T = 1/f_SWDCK max	–	–	2T/5	

Figure 11-61. SWD Interface Timing

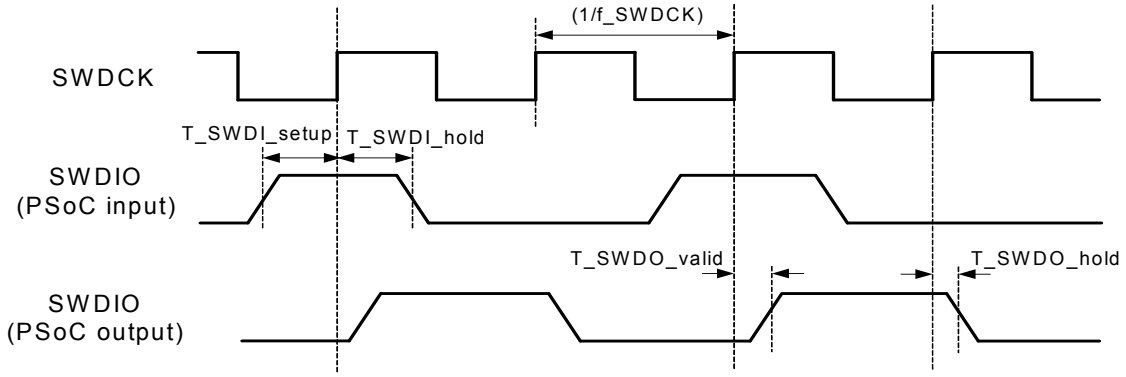

11.8.6 SWV Interface

Table 11-70. SWV Interface AC Specifications[29]

Parameter	Description	Conditions	Min	Typ	Max	Units
	SWV mode SWV bit rate		-	-	33	Mbit

Notes
59. f_TCK must also be no more than 1/3 CPU clock frequency.
60. f_SWDCK must also be no more than 1/3 CPU clock frequency.

11.9 Clocking

Specifications are valid for -40°C ≤ Ta ≤ 125°C and Tj ≤ 150°C, except where noted. Specifications are valid for 1.71 V to 5.5 V, except where noted.

11.9.1 Internal Main Oscillator

Table 11-71. IMO DC Specifications

Parameter	Description	Conditions	Min	Typ	Max	Units
	Supply current					
	62.6 MHz		–	–	600	µA
	48 MHz		–	–	500	µA
	24 MHz – USB mode	With oscillator locking to USB bus	–	–	500	µA
	24 MHz – non USB mode		–	–	300	µA
	12 MHz		–	–	200	µA
	6 MHz		–	–	180	µA
	3 MHz		–	–	150	µA

Figure 11-62. IMO Current vs. Frequency

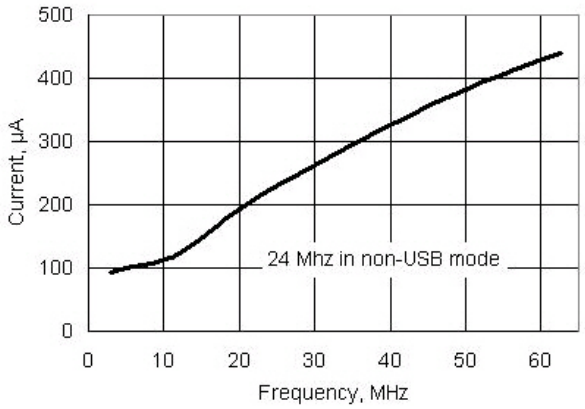

Table 11-72. IMO AC Specifications

Parameter	Description	Conditions	Min	Typ	Max	Units
F_{IMO} [61]	IMO frequency stability (with factory trim)					
	62.6 MHz		–7	–	7	%
	48 MHz		–5	–	5	%
	24 MHz – Non USB mode		–4	–	4	%
	24 MHz – USB mode	With oscillator locking to USB bus	–0.25	–	0.25	%
	12 MHz		–3	–	3	%
	6 MHz		–2	–	2	%
	3 MHz		–2	–	2	%
	3 MHz frequency stability after typical PCB assembly post-reflow.	Typical (non-optimized) board layout and 250 °C solder reflow. Device may be calibrated after assembly to improve performance.	-	±2	-	%
	Startup time[62]	From enable (during normal system operation)	–	–	13	µs
Jp–p	Jitter (peak to peak)[62]					
	F = 24 MHz		–	0.9	–	ns
	F = 3 MHz		–	1.6	–	ns
Jperiod	Jitter (long term)[62]					
	F = 24 MHz		–	0.9	–	ns
	F = 3 MHz		–	12	–	ns

Notes
61. F_{IMO} is measured after packaging, and thus accounts for substrate and die attach stresses.
62. Based on device characterization (Not production tested).

Figure 11-63. IMO Frequency Variation vs. Temperature

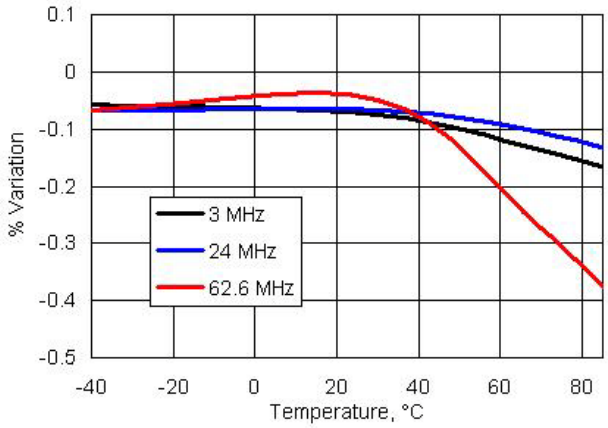

Figure 11-64. IMO Frequency Variation vs. V_{CC}

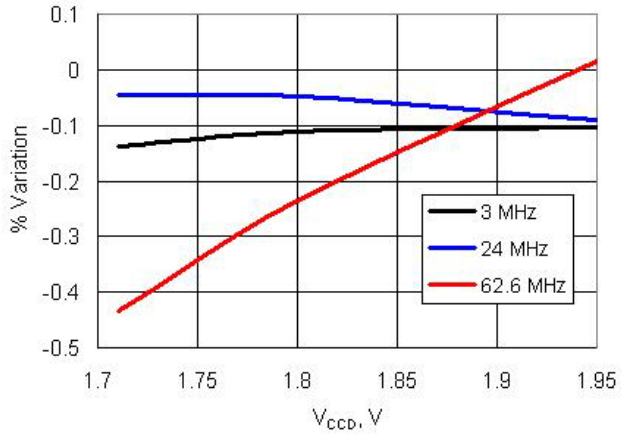

11.9.2 Internal Low Speed Oscillator

Table 11-73. ILO DC Specifications

Parameter	Description	Conditions	Min	Typ	Max	Units
I_{CC}	Operating current[63]	F_{OUT} = 1 kHz	–	–	1.7	µA
		F_{OUT} = 33 kHz	–	–	2.6	µA
		F_{OUT} = 100 kHz	–	–	2.6	µA
	Leakage current[63]	-40°C ≤ Ta ≤ 85°C and Tj ≤ 100°C	-	2.0	15	nA
		Power down mode				
	Leakage current[63]	-40°C ≤ Ta ≤ 125°C and Tj ≤ 150°C	-	-	200	nA
		Power down mode				

Table 11-74. ILO AC Specifications

Parameter	Description	Conditions	Min	Typ	Max	Units
	Startup time	Turbo mode	-	-	2	ms
Filo	ILO frequencies (trimmed)	-40°C ≤ Ta ≤ 85°C and Tj ≤ 100°C				
	100 kHz		45	100	200	kHz
	1 kHz		0.5	1	2	kHz
	ILO frequencies (untrimmed)	-40°C ≤ Ta ≤ 85°C and Tj ≤ 100°C				
	100 kHz		30	100	300	kHz
	1 kHz		0.3	1	3.5	kHz
Filo	ILO frequencies (trimmed)	-40°C ≤ Ta ≤ 125°C and Tj ≤ 150°C				
	100 kHz		45	-	450	kHz
	1 kHz		0.5	-	5	kHz
	ILO frequencies (untrimmed)	-40°C ≤ Ta ≤ 125°C and Tj ≤ 150°C				
	100 kHz		150	-	500	kHz
	1 kHz		0.3	-	6.5	kHz

Figure 11-65. ILO Frequency Variation vs. V_{DD}

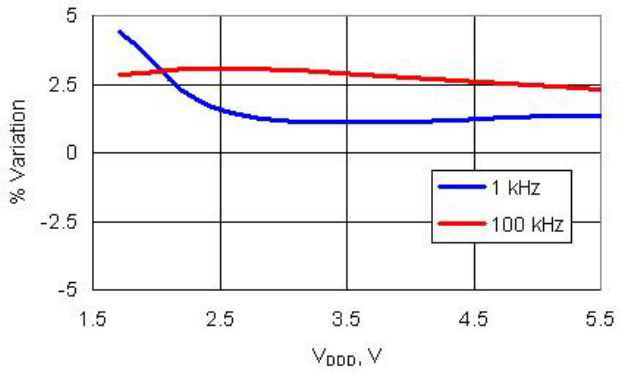

Note
63. This value is calculated, not measured.
64. Based on device characterization (Not production tested).

11.9.3 External Crystal Oscillator

Table 11-75. 32 kHz External Crystal DC Specifications[65]

Parameter	Description	Conditions	Min	Typ	Max	Units
Icc	Operating current	Low power mode; C_L = 6 pF; -40°C ≤ Ta ≤ 125°C and Tj ≤ 150°C	–	0.25	1.0	µA
DL	Drive level	Low-power mode; C_L = 6 pF	–	–	1	µW

Table 11-76. 32 kHz External Crystal AC Specifications

Parameter	Description	Conditions	Min	Typ	Max	Units
F	Frequency		–	32.768	–	kHz
Ton	Startup time	High power mode	–	1	–	s

Table 11-77. MHz ECO AC Specifications

Parameter	Description	Conditions	Min	Typ	Max	Units
F	Crystal frequency range		4	–	25	MHz

11.9.4 External Clock Reference

Table 11-78. External Clock Reference AC Specifications

Parameter	Description	Conditions	Min	Typ	Max	Units
	External frequency range		0	–	33	MHz
	Input duty cycle range	Measured at V_{DDIO}/2	30	50	70	%
	Input edge rate	V_{IL} to V_{IH}	0.51	–	–	V/ns

11.9.5 Phase-Locked Loop

Table 11-79. PLL DC Specifications

Parameter	Description	Conditions	Min	Typ	Max	Units
I_{DD}	PLL operating current	In = 3 MHz, Out = 67 MHz	–	400	–	µA
		In = 3 MHz, Out = 24 MHz	–	200	–	µA

Table 11-80. PLL AC Specifications

Parameter	Description	Conditions	Min	Typ	Max	Units
Fpllin	PLL input frequency[66]	Output of Prescalar	1	-	48	MHz
	PLL intermediate frequency[67]		1	-	3	MHz
Fpllout	PLL output frequency[66]	-40°C ≤ Ta ≤ 85°C and Tj ≤ 100°C	24	-	67	MHz
		-40°C ≤ Ta ≤ 125°C and Tj ≤ 150°C	24	-	50	MHz
	Lock time at startup		-	-	250	µs
Jperiod-rms	Jitter (rms)[29]	-40°C ≤ Ta ≤ 85°C and Tj ≤ 100°C	-	-	250	ps
		-40°C ≤ Ta ≤ 125°C and Tj ≤ 150°C	-	-	400	ps

Notes
65. Based on device characterization (not production tested).
66. This specification is guaranteed by testing the PLL across the specified range using the IMO as the source for the PLL.
67. PLL input divider, Q, must be set so that the input frequency is divided down to the intermediate frequency range. Value for Q ranges from 1 to 16.

12. Ordering Information

In addition to the features listed in Table 12-1, every CY8C36 device includes: a precision on-chip voltage reference, precision oscillators, Flash, ECC, DMA, a fixed function I^2C, 4 KB trace RAM, JTAG/SWD programming and debug, external memory interface, and more. In addition to these features, the flexible UDBs and Analog Subsection support a wide range of peripherals. To assist you in selecting the ideal part, PSoC Creator makes a part recommendation after you choose the components required by your application. All CY8C36 derivatives incorporate device and Flash security in user-selectable security levels; see TRM for details.

Table 12-1. CY8C36 Family with Single Cycle 8051

Part Number	MCU Core				Analog								Digital				I/O[69]				Package	JTAG ID[70]
	CPU Speed (MHz)	Flash (KB)	SRAM (KB)	EEPROM (KB)	LCD Segment Drive	ADC	DAC	Comparator	SC/CT Analog Blocks	Opamps	DFB	CapSense	UDBs[68]	16-bit Timer/PWM	FS USB	CAN 2.0b	Total I/O	GPIO	SIO	USBIO		
32 KB Flash																						
CY8C3645AXE-169	50	32	4	1	-	12-bit Del-Sig	4	4	4	4	✔	✔	20	4	✔	-	72	62	8	2	100-TQFP	0x1E0A9069
CY8C3665AXA-010	67	32	4	1	-	12-bit Del-Sig	4	4	4	4	✔	✔	20	4	-	-	70	62	8	0	100-TQFP	0x1E00A069
CY8C3665AXA-016	67	32	4	1	-	12-bit Del-Sig	4	4	4	4	✔	✔	20	4	✔	-	72	62	8	2	100-TQFP	0x1E010069
CY8C3665PVA-007	67	32	4	1	✔	12-bit Del-Sig	4	4	4	2	✔	✔	20	4	✔	-	31	25	4	2	48-SSOP	0x1E007069
CY8C3665PVA-008	67	32	4	1	-	12-bit Del-Sig	4	4	4	2	✔	✔	20	4	-	-	29	25	4	0	48-SSOP	0x1E008069
CY8C3665PVA-080	67	32	4	1	✔	12-bit Del-Sig	4	4	4	2	✔	✔	20	4	-	✔	29	25	4	0	48-SSOP	0x1E050069
64 KB Flash																						
CY8C3646AXE-170	50	64	8	2	-	12-bit Del-Sig	4	4	4	4	✔	✔	24	4	-	-	70	62	8	0	100-TQFP	0x1E0AA069
CY8C3646AXE-178	50	64	8	2	-	12-bit Del-Sig	4	4	4	4	✔	✔	24	4	-	✔	70	62	8	0	100-TQFP	0x1E0B2069
CY8C3646PVE-171	50	64	8	2	-	12-bit Del-Sig	4	4	4	2	✔	✔	24	4	-	-	29	25	4	0	48-SSOP	0x1E0AB069
CY8C3646PVE-179	50	64	8	2	-	12-bit Del-Sig	4	4	4	2	✔	✔	24	4	-	✔	29	25	4	0	48-SSOP	0x1E0B3069
CY8C3666AXA-036	67	64	8	2	✔	12-bit Del-Sig	4	4	4	4	✔	✔	24	4	✔	-	72	62	8	2	100-TQFP	0x1E024069
CY8C3666AXA-037	67	64	8	2	✔	12-bit Del-Sig	4	4	4	4	✔	✔	24	4	-	✔	70	62	8	0	100-TQFP	0x1E025069
CY8C3666AXA-052	67	64	8	2	-	12-bit Del-Sig	4	4	4	4	✔	✔	24	4	-	-	70	62	8	0	100-TQFP	0x1E034069
CY8C3666PVA-022	67	64	8	2	-	12-bit Del-Sig	4	4	4	2	✔	✔	24	4	✔	-	31	25	4	2	48-SSOP	0x1E016069
CY8C3666PVA-026	67	64	8	2	✔	12-bit Del-Sig	4	4	4	2	✔	✔	24	4	-	-	29	25	4	0	48-SSOP	0x1E01A069
CY8C3666PVA-180	67	64	8	2	-	12-bit Del-Sig	4	4	4	2	✔	✔	24	4	-	✔	29	25	4	0	48-SSOP	0x1E0B4069

Notes

68. UDBs support a wide variety of functionality including SPI, LIN, UART, timer, counter, PWM, PRS, and others. Individual functions may use a fraction of a UDB or multiple UDBs. Multiple functions can share a single UDB. See the "Example Peripherals" section on page 40 for more information on how UDBs may be used.
69. The I/O Count includes all types of digital I/O: GPIO, SIO, and the two USB I/O. See the ""I/O System and Routing" section on page 33" for details on the functionality of each of these types of I/O.
70. The JTAG ID has three major fields. The most significant nibble (left digit) is the version, followed by a 2 byte part number and a 3 nibble manufacturer ID.

12.1 Part Numbering Conventions

PSoC 3 devices follow the part numbering convention described below. All fields are single character alphanumeric (0, 1, 2, …, 9, A, B, …, Z) unless stated otherwise.

CY8Cabcdefg-xxx

- a: Architecture
  - 3: PSoC 3
  - 5: PSoC 5
- b: Family Group within Architecture
  - 2: CY8C32 family
  - 4: CY8C34 family
  - 6: CY8C36 family
  - 8: CY8C38 family
- c: Speed Grade
  - 4: 50 MHz
  - 6: 67 MHz
- d: Flash Capacity
  - 4: 16 KB
  - 5: 32 KB
  - 6: 64 KB
- ef: Package Code
  - Two character alphanumeric
  - AX: TQFP
  - LT: QFN
  - PV: SSOP
- g: Temperature Range
  - C: commercial 0°C to 70°C
  - I: industrial -40°C to 85°C
  - A: automotive -40°C to 85°C
  - E: extended -40°C to 125°C
- xxx: Peripheral Set
  - Three character numeric
  - No meaning is associated with these three characters.

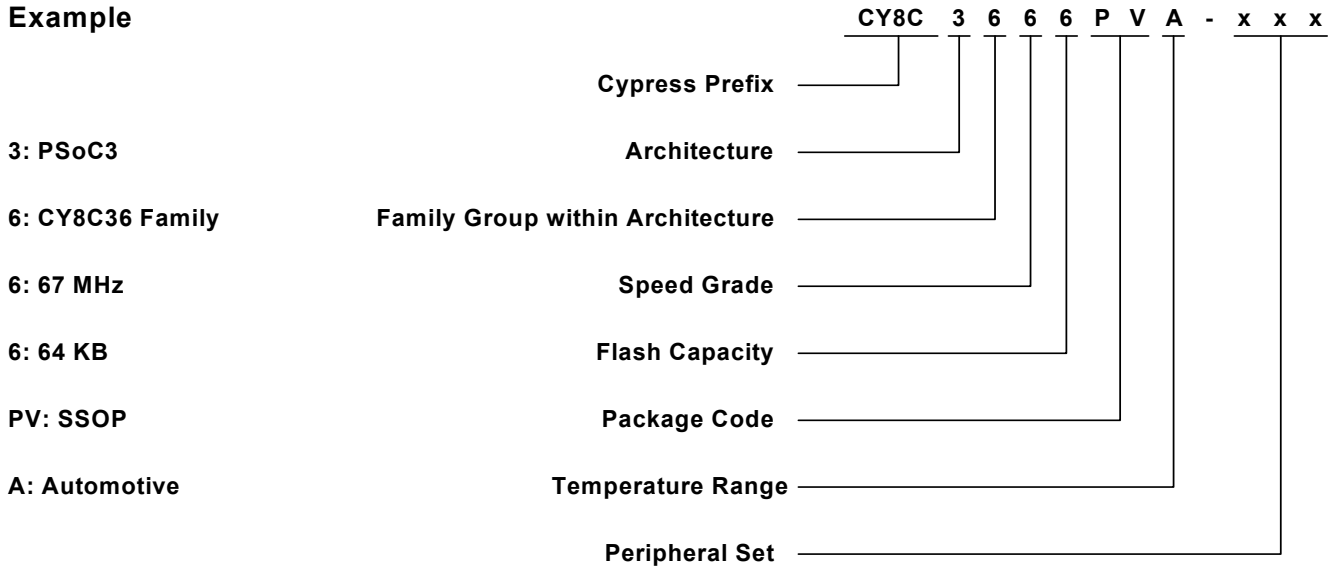

All devices in the PSoC 3 CY8C36 family comply to RoHS-6 specifications, demonstrating the commitment by Cypress to lead-free products. Lead (Pb) is an alloying element in solders that has resulted in environmental concerns due to potential toxicity. Cypress uses nickel-palladium-gold (NiPdAu) technology for the majority of leadframe-based packages.

A high level review of the Cypress Pb-free position is available on our website. Specific package information is also available. Package Material Declaration Datasheets (PMDDs) identify all substances contained within Cypress packages. PMDDs also confirm the absence of many banned substances. The information in the PMDDs will help Cypress customers plan for recycling or other "end of life" requirements.

13. Packaging

Table 13-1. Package Characteristics

Parameter	Description	Conditions	Min	Typ	Max	Units
T_A	Operating ambient temperature		–40	25.00	125	°C
T_J	Operating junction temperature		–40	–	150	°C
T_{JA}	Package θ_{JA} (48-pin SSOP)		–	49	–	°C/W
T_{JA}	Package θ_{JA} (100-pin TQFP)		–	34	–	°C/W
T_{JC}	Package θ_{JC} (48-pin SSOP)		–	24	–	°C/W
T_{JC}	Package θ_{JC} (100-pin TQFP)		–	10	–	°C/W

Table 13-2. Solder Reflow Peak Temperature

Package	Maximum Peak Temperature	Maximum Time at Peak Temperature
48-pin SSOP	260 °C	30 seconds
100-pin TQFP	260 °C	30 seconds

Table 13-3. Package Moisture Sensitivity Level (MSL), IPC/JEDEC J-STD-2

Package	MSL
48-pin SSOP	MSL 3
100-pin TQFP	MSL 3

Figure 13-1. 48-pin (300 mil) SSOP Package Outline

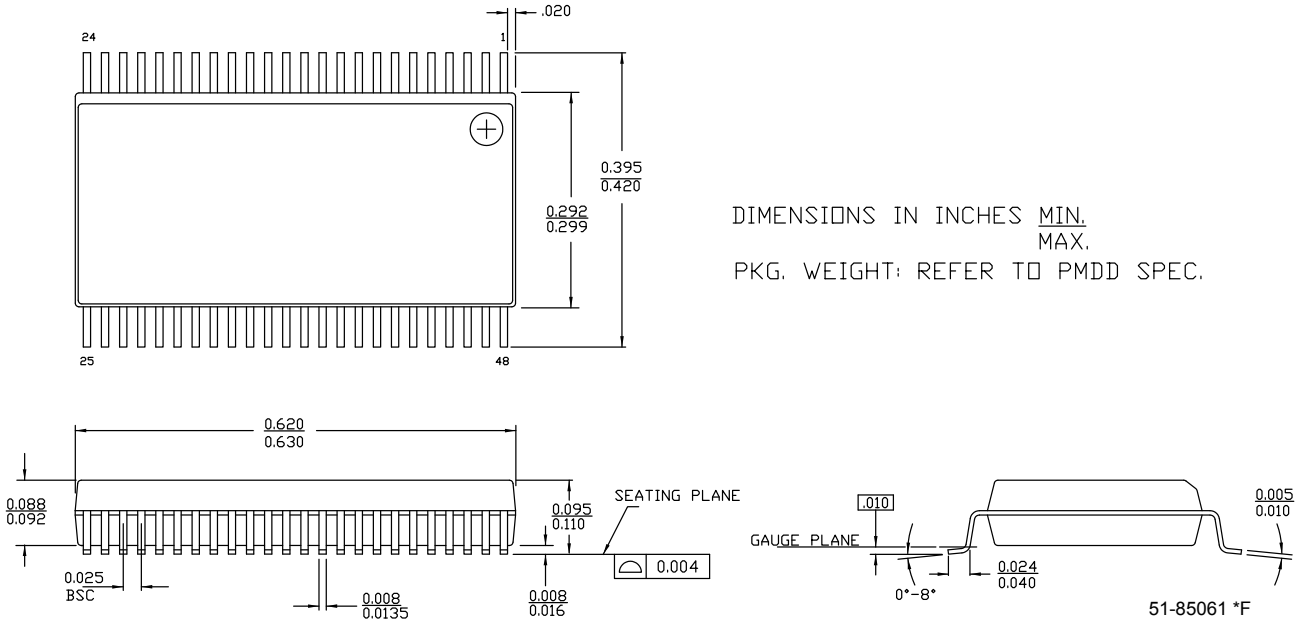

Figure 13-2. 100-pin TQFP (14 × 14 × 1.4 mm) Package Outline

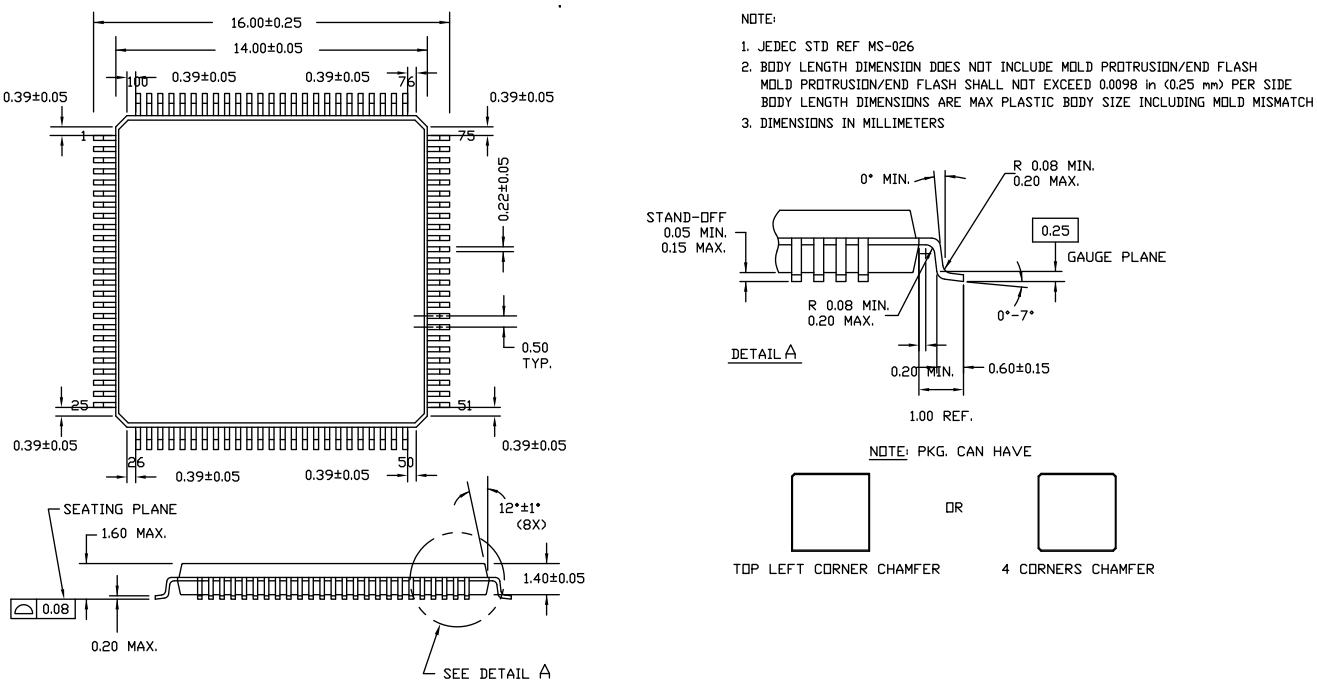

51-85048 *I

14. Acronyms

Table 14-1. Acronyms Used in this Document

Acronym	Description
abus	analog local bus
ADC	analog-to-digital converter
AG	analog global
AHB	AMBA (advanced microcontroller bus architecture) high-performance bus, an ARM data transfer bus
ALU	arithmetic logic unit
AMUXBUS	analog multiplexer bus
API	application programming interface
APSR	application program status register
ARM®	advanced RISC machine, a CPU architecture
ATM	automatic thump mode
BW	bandwidth
CAN	Controller Area Network, a communications protocol
CMRR	common-mode rejection ratio
CPU	central processing unit
CRC	cyclic redundancy check, an error-checking protocol
DAC	digital-to-analog converter, see also IDAC, VDAC
DFB	digital filter block
DIO	digital input/output, GPIO with only digital capabilities, no analog. See GPIO.
DMA	direct memory access, see also TD
DNL	differential nonlinearity, see also INL
DNU	do not use
DR	port write data registers
DSI	digital system interconnect
DWT	data watchpoint and trace
ECC	error correcting code
ECO	external crystal oscillator
EEPROM	electrically erasable programmable read-only memory
EMI	electromagnetic interference
EMIF	external memory interface
EOC	end of conversion
EOF	end of frame
EPSR	execution program status register
ESD	electrostatic discharge
ETM	embedded trace macrocell

Table 14-1. Acronyms Used in this Document *(continued)*

Acronym	Description
FIR	finite impulse response, see also IIR
FPB	flash patch and breakpoint
FS	full-speed
GPIO	general-purpose input/output, applies to a PSoC pin
HVI	high-voltage interrupt, see also LVI, LVD
IC	integrated circuit
IDAC	current DAC, see also DAC, VDAC
IDE	integrated development environment
I^2C, or IIC	Inter-Integrated Circuit, a communications protocol
IIR	infinite impulse response, see also FIR
ILO	internal low-speed oscillator, see also IMO
IMO	internal main oscillator, see also ILO
INL	integral nonlinearity, see also DNL
I/O	input/output, see also GPIO, DIO, SIO, USBIO
IPOR	initial power-on reset
IPSR	interrupt program status register
IRQ	interrupt request
ITM	instrumentation trace macrocell
LCD	liquid crystal display
LIN	Local Interconnect Network, a communications protocol.
LR	link register
LUT	lookup table
LVD	low-voltage detect, see also LVI
LVI	low-voltage interrupt, see also HVI
LVTTL	low-voltage transistor-transistor logic
MAC	multiply-accumulate
MCU	microcontroller unit
MISO	master-in slave-out
NC	no connect
NMI	nonmaskable interrupt
NRZ	non-return-to-zero
NVIC	nested vectored interrupt controller
NVL	nonvolatile latch, see also WOL
opamp	operational amplifier
PAL	programmable array logic, see also PLD
PC	program counter
PCB	printed circuit board
PGA	programmable gain amplifier

Table 14-1. Acronyms Used in this Document *(continued)*

Acronym	Description
PHUB	peripheral hub
PHY	physical layer
PICU	port interrupt control unit
PLA	programmable logic array
PLD	programmable logic device, see also PAL
PLL	phase-locked loop
PMDD	package material declaration data sheet
POR	power-on reset
PRES	precise low-voltage reset
PRS	pseudo random sequence
PS	port read data register
PSoC®	Programmable System-on-Chip™
PSRR	power supply rejection ratio
PWM	pulse-width modulator
RAM	random-access memory
RISC	reduced-instruction-set computing
RMS	root-mean-square
RTC	real-time clock
RTL	register transfer language
RTR	remote transmission request
RX	receive
SAR	successive approximation register
SC/CT	switched capacitor/continuous time
SCL	I^2C serial clock
SDA	I^2C serial data
S/H	sample and hold
SINAD	signal to noise and distortion ratio
SIO	special input/output, GPIO with advanced features. See GPIO.
SOC	start of conversion

Table 14-1. Acronyms Used in this Document *(continued)*

Acronym	Description
SOF	start of frame
SPI	Serial Peripheral Interface, a communications protocol
SR	slew rate
SRAM	static random access memory
SRES	software reset
SWD	serial wire debug, a test protocol
SWV	single-wire viewer
TD	transaction descriptor, see also DMA
THD	total harmonic distortion
TIA	transimpedance amplifier
TRM	technical reference manual
TTL	transistor-transistor logic
TX	transmit
UART	Universal Asynchronous Transmitter Receiver, a communications protocol
UDB	universal digital block
USB	Universal Serial Bus
USBIO	USB input/output, PSoC pins used to connect to a USB port
VDAC	voltage DAC, see also DAC, IDAC
WDT	watchdog timer
WOL	write once latch, see also NVL
WRES	watchdog timer reset
XRES	external reset I/O pin
XTAL	crystal

15. Reference Documents

PSoC® 3, PSoC® 5 Architecture TRM

PSoC® 3 Registers TRM

16. Document Conventions

16.1 Units of Measure

Table 16-1. Units of Measure

Symbol	Unit of Measure
°C	degrees Celsius
dB	decibels
fF	femtofarads
Hz	hertz
KB	1024 bytes
kbps	kilobits per second
Khr	kilohours
kHz	kilohertz
kΩ	kilohms
ksps	kilosamples per second
LSB	least significant bit
Mbps	megabits per second
MHz	megahertz
MΩ	megaohms
Msps	megasamples per second
µA	microamperes
µF	microfarads
µH	microhenrys
µs	microseconds
µV	microvolts
µW	microwatts
mA	milliamperes
ms	milliseconds
mV	millivolts
nA	nanoamperes
ns	nanoseconds
nV	nanovolts
Ω	ohms
pF	picofarads
ppm	parts per million
ps	picoseconds
s	seconds
sps	samples per second
sqrtHz	square root of hertz
V	volts

17. Revision History

Description Title: PSoC® 3: CY8C36 Automotive Family Datasheet, Programmable System-on-Chip (PSoC®) Document Number: 001-57330				
Revision	**ECN**	**Submission Date**	**Orig. of Change**	**Description of Change**
**	2800070	01/05/10	SECA	New data sheet
*A	2921624	04/26/2010	MKEA	Updated Active Mode Idd values in Table 11-2 Updated Boost AC and DC specifications Updated solder paste reflow temperature (Table 11-3) Moved Filo spec from ILO DC to ILO AC table Updated Figure 7-14, Interrupt and DMA processing Added Bytes column in Tables 4-1 and 4-5 Updated Figure 6-3, Power mode transitions Updated JTAG and SWD specifications Updated Interrupt Vector table Updated Sales links Updated PCB Schematic Updated Vbias spec Added UDBs subsection under 11.6 Digital Peripherals Updated Iout parameter in LCD Direct Drive DC Specs table Added footnote in PLL AC Specification table Added Load regulation and Line regulation parameters to Inductive Boost Regulator DC Specifications table Updated Icc parameter in LCD Direct Drive DC Specs table Updated Tstartup parameter in AC Specifications table Updated LVD in Tables 6-2 and 6-3 In page 1, updated internal oscillator range under Precision programmable clocking to start from 3 MHz Updated Pin Descriptions section and modified Figures 6-6, 6-8, 6-9 Added PLL intermediate frequency row with footnote in PLL AC Specs table Added bullets on CapSense in page 1; added CapSense column in Section Updated Figure 2-6 (PCB Layout) Updated Tstartup values in Table 11-3 Updated IMO frequency Updated section 5.2 and Table 11-2 to correct suggestion of execution from Flash Updated Vref specs in Table 11-21. Updated IDAC uncompensated gain error in Table 11-25. Updated Tresp, high and low power modes, in Table 11-24. Updated Delay from Interrupt signal input to ISR code execution from ISR code in Table 72. Updated sleep wakeup time in Table 6-3 and Tsleep in Table 11-3. Updated SNR condition in Table 11-20
*B	3490494	01/11/2012	GIR	Updated Figure 6-7 on page 34
*C	3994809	05/08/2013	KPAT	Updated all tables in Electrical Specifications. Updated Ordering Information (Updated part numbers, JTAG ID). Removed all references of Vboost across the document.
*D	4047900	07/02/2013	RASB	Changed status from Preliminary to Final. Updated Features. Updated Architectural Overview. Updated Memory. Updated Analog Subsystem. Updated Electrical Specifications.

17. Revision History *(continued)*

Description Title: PSoC® 3: CY8C36 Automotive Family Datasheet, Programmable System-on-Chip (PSoC®) Document Number: 001-57330				
Revision	**ECN**	**Submission Date**	**Orig. of Change**	**Description of Change**
*E	4109902	08/31/2013	NFB / ANMD	Updated Features. Updated Architectural Overview: Added Note 4 and referred the same note in features in “The heart of the analog subsystem is a fast, accurate, configurable delta-sigma ADC with these features”. Updated Pinouts: Updated Figure 2-5. Updated Memory: Updated EEPROM: Updated description. Updated Nonvolatile Latches (NVLs): Updated Table 5-2 and Table 5-3. Updated Memory Map: Updated I/O Port SFRs: Updated xdata Space: Updated Table 5-5. Updated Digital Subsystem: Updated Universal Digital Block: Updated PLD Module: Updated Figure 7-3. Updated I^2C: Updated description. Updated Analog Subsystem: Updated Programmable SC/CT Blocks: Updated PGA: Updated Table 8-3. Updated Electrical Specifications: Updated Device Level Specifications: Updated Table 11-2. Updated Inputs and Outputs: Updated GPIO: Removed figure “GPIO Output Rise and Fall Times, Fast Strong Mode, V_{DDIO} = 3.3 V, 25 pF Load” and figure “GPIO Output Rise and Fall Times, Slow Strong Mode, V_{DDIO} = 3.3 V, 25 pF Load”. Updated Analog Peripherals: Updated Delta-Sigma ADC: Updated Table 11-17. Updated Table 11-18. Updated Voltage Reference: Updated Table 11-20. Updated Programmable Gain Amplifier: Updated Table 11-33. Updated Memory: Updated Flash: Updated Table 11-52. Updated Packaging: spec 51-85048 – Changed revision from *G to *H. Updated in new template.

17. Revision History *(continued)*

Description Title: PSoC® 3: CY8C36 Automotive Family Datasheet, Programmable System-on-Chip (PSoC®) Document Number: 001-57330				
Revision	**ECN**	**Submission Date**	**Orig. of Change**	**Description of Change**
*F	4174914	10/26/2013	NFB / ANMD	Updated Pinouts: Added Note 7 and referred the same note in 100 mA in description. Updated Electrical Specifications: Updated Absolute Maximum Ratings: Updated Table 11-1. Added Note 17 and referred the same note in Table 11-1. Added Note 19 and referred the same note in Ivddio parameter in Table 11-1. Updated Analog Peripherals: Updated Opamp: Updated Table 11-15. Updated Voltage Reference: Updated Table 11-20. Updated Packaging: Updated Table 13-1.
*G	4281204	02/14/2014	ANMD	Updated Digital Subsystem: Updated I^2C: Updated Note 16. Updated Electrical Specifications: Updated Analog Peripherals: Updated Delta-Sigma ADC: Updated Table 11-17: Updated Conditions of Vos parameter. Updated Memory: Updated Flash: Updated Table 11-52: Added Note 54 and referred the same note in “Flash data retention time, retention period measured from last erase cycle” in description column. Replaced “Tjavg” with “T_A” in last row in conditions column. Updated Packaging: spec 51-85048 – Changed revision from *H to *I. Completing Sunset Review.

18. Sales, Solutions, and Legal Information

Worldwide Sales and Design Support

Cypress maintains a worldwide network of offices, solution centers, manufacturer's representatives, and distributors. To find the office closest to you, visit us at Cypress Locations.

Products

Automotive	cypress.com/go/automotive
Clocks & Buffers	cypress.com/go/clocks
Interface	cypress.com/go/interface
Lighting & Power Control	cypress.com/go/powerpsoc cypress.com/go/plc
Memory	cypress.com/go/memory
PSoC	cypress.com/go/psoc
Touch Sensing	cypress.com/go/touch
USB Controllers	cypress.com/go/USB
Wireless/RF	cypress.com/go/wireless

PSoC® Solutions

psoc.cypress.com/solutions

PSoC 1 | PSoC 3 | PSoC 4 | PSoC 5LP

Cypress Developer Community

Community | Forums | Blogs | Video | Training

Technical Support

cypress.com/go/support

© Cypress Semiconductor Corporation, 2010-2014. The information contained herein is subject to change without notice. Cypress Semiconductor Corporation assumes no responsibility for the use of any circuitry other than circuitry embodied in a Cypress product. Nor does it convey or imply any license under patent or other rights. Cypress products are not warranted nor intended to be used for medical, life support, life saving, critical control or safety applications, unless pursuant to an express written agreement with Cypress. Furthermore, Cypress does not authorize its products for use as critical components in life-support systems where a malfunction or failure may reasonably be expected to result in significant injury to the user. The inclusion of Cypress products in life-support systems application implies that the manufacturer assumes all risk of such use and in doing so indemnifies Cypress against all charges.

Any Source Code (software and/or firmware) is owned by Cypress Semiconductor Corporation (Cypress) and is protected by and subject to worldwide patent protection (United States and foreign), United States copyright laws and international treaty provisions. Cypress hereby grants to licensee a personal, non-exclusive, non-transferable license to copy, use, modify, create derivative works of, and compile the Cypress Source Code and derivative works for the sole purpose of creating custom software and or firmware in support of licensee product to be used only in conjunction with a Cypress integrated circuit as specified in the applicable agreement. Any reproduction, modification, translation, compilation, or representation of this Source Code except as specified above is prohibited without the express written permission of Cypress.

Disclaimer: CYPRESS MAKES NO WARRANTY OF ANY KIND, EXPRESS OR IMPLIED, WITH REGARD TO THIS MATERIAL, INCLUDING, BUT NOT LIMITED TO, THE IMPLIED WARRANTIES OF MERCHANTABILITY AND FITNESS FOR A PARTICULAR PURPOSE. Cypress reserves the right to make changes without further notice to the materials described herein. Cypress does not assume any liability arising out of the application or use of any product or circuit described herein. Cypress does not authorize its products for use as critical components in life-support systems where a malfunction or failure may reasonably be expected to result in significant injury to the user. The inclusion of Cypress' product in a life-support systems application implies that the manufacturer assumes all risk of such use and in doing so indemnifies Cypress against all charges.

Use may be limited by and subject to the applicable Cypress software license agreement.

CapSense®, PSoC® 3, PSoC® 5, and PSoC® Creator™ are trademarks and PSoC® is a registered trademark of Cypress Semiconductor Corp. ARM is a registered trademark, and Keil, and RealView are trademarks, of ARM Limited. All other trademarks or registered trademarks referenced herein are property of the respective corporations.