Please note that Cypress is an Infineon Technologies Company.
The document following this cover page is marked as “Cypress” document as this is the company that originally developed the product. Please note that Infineon will continue to offer the product to new and existing customers as part of the Infineon product portfolio.

Continuity of document content
The fact that Infineon offers the following product as part of the Infineon product portfolio does not lead to any changes to this document. Future revisions will occur when appropriate, and any changes will be set out on the document history page.

Continuity of ordering part numbers
Infineon continues to support existing part numbers. Please continue to use the ordering part numbers listed in the datasheet for ordering.

The following document contains information on Cypress products. The document has the series name, product name, and ordering part numbering with the prefix “MB”. However, Cypress will offer these products to new and existing customers with the series name, product name, and ordering part number with the prefix “CY”.

How to Check the Ordering Part Number

1. Go to www.cypress.com/pcn.
2. Enter the keyword (for example, ordering part number) in the **SEARCH PCNS** field and click **Apply**.
3. Click the corresponding title from the search results.
4. Download the Affected Parts List file, which has details of all changes

For More Information

Please contact your local sales office for additional information about Cypress products and solutions.

About Cypress

Cypress is the leader in advanced embedded system solutions for the world's most innovative automotive, industrial, smart home appliances, consumer electronics and medical products. Cypress' microcontrollers, analog ICs, wireless and USB-based connectivity solutions and reliable, high-performance memories help engineers design differentiated products and get them to market first. Cypress is committed to providing customers with the best support and development resources on the planet enabling them to disrupt markets by creating new product categories in record time. To learn more, go to www.cypress.com.

New 8FX, MB95810K Series

8-bit Microcontroller Hardware Manual

Doc. # 002-05469 Rev. *A

Cypress Semiconductor
198 Champion Court
San Jose, CA 95134-1709

Phone (USA): 800.858.1810
Phone (Intnl): +1.408.943.2600
www.cypress.com

Copyrights

© Cypress Semiconductor Corporation, 2013-2016. This document is the property of Cypress Semiconductor Corporation and its subsidiaries, including Spansion LLC ("Cypress"). This document, including any software or firmware included or referenced in this document ("Software"), is owned by Cypress under the intellectual property laws and treaties of the United States and other countries worldwide. Cypress reserves all rights under such laws and treaties and does not, except as specifically stated in this paragraph, grant any license under its patents, copyrights, trademarks, or other intellectual property rights. If the Software is not accompanied by a license agreement and you do not otherwise have a written agreement with Cypress governing the use of the Software, then Cypress hereby grants you a personal, non-exclusive, nontransferable license (without the right to sublicense) (1) under its copyright rights in the Software (a) for Software provided in source code form, to modify and reproduce the Software solely for use with Cypress hardware products, only internally within your organization, and (b) to distribute the Software in binary code form externally to end users (either directly or indirectly through resellers and distributors), solely for use on Cypress hardware product units, and (2) under those claims of Cypress's patents that are infringed by the Software (as provided by Cypress, unmodified) to make, use, distribute, and import the Software solely for use with Cypress hardware products. Any other use, reproduction, modification, translation, or compilation of the Software is prohibited.

TO THE EXTENT PERMITTED BY APPLICABLE LAW, CYPRESS MAKES NO WARRANTY OF ANY KIND, EXPRESS OR IMPLIED, WITH REGARD TO THIS DOCUMENT OR ANY SOFTWARE OR ACCOMPANYING HARDWARE, INCLUDING, BUT NOT LIMITED TO, THE IMPLIED WARRANTIES OF MERCHANTABILITY AND FITNESS FOR A PARTICULAR PURPOSE. To the extent permitted by applicable law, Cypress reserves the right to make changes to this document without further notice. Cypress does not assume any liability arising out of the application or use of any product or circuit described in this document. Any information provided in this document, including any sample design information or programming code, is provided only for reference purposes. It is the responsibility of the user of this document to properly design, program, and test the functionality and safety of any application made of this information and any resulting product. Cypress products are not designed, intended, or authorized for use as critical components in systems designed or intended for the operation of weapons, weapons systems, nuclear installations, life-support devices or systems, other medical devices or systems (including resuscitation equipment and surgical implants), pollution control or hazardous substances management, or other uses where the failure of the device or system could cause personal injury, death, or property damage ("Unintended Uses"). A critical component is any component of a device or system whose failure to perform can be reasonably expected to cause the failure of the device or system, or to affect its safety or effectiveness. Cypress is not liable, in whole or in part, and you shall and hereby do release Cypress from any claim, damage, or other liability arising from or related to all Unintended Uses of Cypress products. You shall indemnify and hold Cypress harmless from and against all claims, costs, damages, and other liabilities, including claims for personal injury or death, arising from or related to any Unintended Uses of Cypress products.

Cypress, the Cypress logo, Spansion, the Spansion logo, and combinations thereof, WICED, PSoC, CapSense, EZ-USB, F-RAM, and Traveo are trademarks or registered trademarks of Cypress in the United States and other countries. For a more complete list of Cypress trademarks, visit cypress.com. Other names and brands may be claimed as property of their respective owners.

ARM and Cortex are the trademarks of ARM Limited in the EU and other countries.

Preface

The Purpose and Intended Readership of This Manual

Thank you very much for your continued special support for Cypress products.

The MB95810K Series is a line of products developed as general-purpose products in the New 8FX family of proprietary 8-bit single-chip microcontrollers applicable as application-specific integrated circuits (ASICs). The MB95810K Series can be used for a wide range of applications from consumer products including portable devices to industrial equipment.

Intended for engineers who actually develop products using the MB95810K Series of microcontrollers, this manual describes its functions, features, and operations. You should read through the manual.

This manual is written to explain the respective configurations and operations of peripheral functions, but not to provide specifications of a device.

For detailed specifications of a device, refer to its data sheet.

For details on individual instructions, refer to "F^{2}MC-8FXProgramming Manual".

Sample Programs

Cypress provides sample programs free of charge to operate the peripheral resources of the New 8FX family of microcontrollers. Feel free to use such sample programs to check the operational specifications and usages of Cypress microcontrollers.

Note that sample programs are subject to change without notice. As these pieces of software are offered to show standard operations and usages, evaluate them sufficiently before use with your system. Cypress assumes no liability for any damages whatsoever arising out of the use of sample programs.

How to Use This Manual

Finding a function

The following methods can be used to search for details of a peripheral function in this manual:

- Searching from Contents

Contents lists the contents in this manual in the order of description.

- Searching from registers

The address at which a register is located is not mentioned in this manual. To check the address of a register, refer to “I/O Map" in the device data sheet.

Chapters

This manual explains one peripheral function in one chapter.

Terminology

This manual uses the following terminology.

Term	Explanation
Word	Indicates an access in unit of 16 bits.
Byte	Indicates an access in unit of 8 bits.

Notations

The notations in "Register Configuration" in this manual are explained below:

- bit: bit number
- Field: bit field name
- Attribute: Attributes for read access and write access of each bit
  - R: Read-only
  - W: Write-only
  - R/W: Readable/Writable
  - —: Undefined
- Initial value: Initial value of a bit after a reset

  0: The initial value is "0".
  - 1: The initial value is "1".
  - X: The initial value is undefined.

Multiple bits are indicated in this manual in the following way.

- Example 1: bit7:0 represents bit7 to bit0.
- Example 2: SCM[2:0] represents SCM2 to SCM0.

The values such as those indicating addresses are written in this manual in the following ways:

- Hexadecimal number: The prefix "0x" is attached to the beginning of a value (e.g: 0xFFFF).
- Binary number: The prefix "0b" is attached to the beginning of a value (e.g: 0b1111).
- Decimal number: Only the number is used (e.g: 1234).

In this manual, "n" in a pin name and a register abbreviation represents the channel number.

Contents

1. Memory Access Mode **17**

1.1 Memory Access Mode 17
1.1.1 Single-chip Mode 17

2. CPU **19**

2.1 Dedicated Registers 19
2.1.1 Register Bank Pointer (RP) 21
2.1.2 Direct Bank Pointer (DP) 22
2.1.3 Condition Code Register (CCR) 24
2.1.4 Configuration of Condition Code Register (CCR) 24
2.1.5 Bits Showing Operation Results 24
2.1.6 Interrupt Acceptance Control Bits 25
2.2 General-purpose Register 26
2.2.1 Configuration of General-purpose Register 26
2.2.2 Features of General-purpose Registers 27
2.3 Placement of 16-bit Data in Memory 28
2.3.1 Placement of 16-bit Data in Memory 28

3. Clock Controller **29**

3.1 Overview 29
3.1.1 Overview of Clock Controller 29
3.1.2 Block Diagram of Clock Controller 30
3.1.3 Configuration of Clock Controller 31
3.1.4 Clock Modes 32
3.1.5 Standby Mode 33
3.1.6 Combinations of Clock Mode and Standby Mode 34
3.2 Oscillation Stabilization Wait Time 36
3.2.1 Oscillation Stabilization Wait Time 36
3.2.2 PLL Clock Oscillation Stabilization Wait Time 37
3.2.3 CR Clock Oscillation Stabilization Wait Time 37
3.2.4 Oscillation Stabilization Wait Time and Clock Mode/Standby Mode Transition 37
3.2.5 Order of Priority for Oscillation Stabilization Wait Times 38
3.3 Registers 39
3.3.1 System Clock Control Register (SYCC) 39
3.3.2 PLL Control Register (PLLC) 41
3.3.3 Oscillation Stabilization Wait Time Setting Register (WATR) 42
3.3.4 Standby Control Register (STBC) 44
3.3.5 System Clock Control Register 2 (SYCC2) 46
3.3.6 Standby Control Register 2 (STBC2) 49
3.4 Clock Modes 50
3.4.1 Operations in Main Clock Mode 50
3.4.2 Operations in Subclock Mode 50

3.4.3 Operations in Main CR Clock Mode or Main CR PLL Clock Mode 50
3.4.4 Operations in Sub-CR Clock Mode 50
3.4.5 Clock Mode State Transition Diagram 50
3.5 Operations in Low Power Consumption Mode (Standby Mode) 54
3.5.1 Notes on Using Standby Mode 54
3.5.2 Sleep Mode 60
3.5.3 Stop Mode 61
3.5.4 Time-base Timer Mode 62
3.5.5 Watch Mode 63
3.6 Clock Oscillator Circuit 64
3.6.1 Clock Oscillator Circuit 64
3.7 Overview of Prescaler 65
3.7.1 Prescaler 65
3.8 Configuration of Prescaler 66
3.8.1 Block Diagram of Prescaler 66
3.8.2 Input Clock 66
3.8.3 Output Clock 66
3.9 Operation of Prescaler 67
3.9.1 Operation of Prescaler 67
3.10 Notes on Using Prescaler 69

4. Reset 71

4.1 Reset Operation 71
4.1.1 Reset Sources 71
4.1.2 Reset Time 72
4.1.3 Reset Output 72
4.1.4 Overview of Reset Operation 73
4.1.5 Effect of Reset on RAM Contents 74
4.1.6 Pin State During a Reset 74
4.2 Register 75
4.2.1 Reset Source Register (RSRR) 75
4.2.2 State of Reset Source Register (RSRR) 77
4.3 Notes on Using Reset 78
4.3.1 Notes on Using Reset 78

5. Interrupts 79

5.1 Interrupts 79
5.1.1 Interrupt Level Setting Registers (ILR0 to ILR5) 80
5.1.2 Interrupt Processing 81
5.1.3 Nested Interrupts 83
5.1.4 Interrupt Processing Time 84
5.1.5 Stack Operation During Interrupt Processing 85
5.1.6 Interrupt Processing Stack Area 86

6. I/O Ports 87

6.1 Overview 87
6.2 Configuration and Operations 88
6.2.1 Configuration of I/O Port 88
6.2.2 Operations of I/O Port 88

7. Time-Base Timer 91

7.1 Overview 91

7.1.1 Interval Timer Function 91
7.2 Configuration 93
7.2.1 Block Diagram of Time-base Timer 93
7.2.2 Input Clock 94
7.2.3 Output Clock 94
7.3 Interrupt 95
7.3.1 Interrupt When Interval Function Is in Operation 95
7.4 Operations and Setting Procedure Example 96
7.4.1 Operations of Time-base Timer 96
7.4.2 Clearing Time-base Timer 96
7.4.3 Operation Examples of Time-base Timer 97
7.4.4 Setting Procedure Example 98
7.5 Register 99
7.5.1 Time-base Timer Control Register (TBTC) 99
7.6 Notes on Using Time-base Timer 101
7.6.1 Notes on Using Time-base Timer 101

8. Hardware / Software Watchdog Timer 103

8.1 Overview 103
8.1.1 Watchdog Timer Function 103
8.2 Configuration 105
8.2.1 Block Diagram of Watchdog Timer 105
8.2.2 Input Clock 106
8.3 Operations and Setting Procedure Example 107
8.3.1 Operations of Watchdog Timer 107
8.3.2 Setting Procedure Example 108
8.4 Register 109
8.4.1 Watchdog Timer Control Register (WDTC) 109
8.5 Notes on Using Watchdog Timer 111
8.5.1 Notes on Using Watchdog Timer 111

9. Watch Prescaler 113

9.1 Overview 113
9.1.1 Interval Timer Function 113
9.2 Configuration 114
9.2.1 Block Diagram of Watch Prescaler 114
9.2.2 Input Clock 115
9.2.3 Output Clock 115
9.3 Interrupt 116
9.3.1 Interrupts in Operation of Interval Timer Function (Watch Prescaler Interrupts) 116
9.4 Operations and Setting Procedure Example 117
9.4.1 Operations of Interval Timer Function (Watch Prescaler) 117
9.4.2 Clearing Watch Prescaler 117
9.4.3 Input Clock Selection for Watch Prescaler 117
9.4.4 Operation Example of Watch Prescaler 118
9.4.5 Setting Procedure Example 119
9.5 Register 120
9.5.1 Watch Prescaler Control Register (WPCR) 120
9.6 Notes on Using Watch Prescaler 122
9.6.1 Notes on Using Watch Prescaler 122

10. Watch Counter 123

10.1 Overview 123
10.1.1 Function of Watch Counter 123
10.2 Configuration 124
10.2.1 Block Diagram of Watch Counter 124
10.2.2 Input Clock 124
10.3 Interrupt 125
10.3.1 Watch Counter Interrupt 125
10.4 Operations and Setting Procedure Example 126
10.4.1 Setup Procedure of Watch Counter 126
10.4.2 Operation in Substop Mode and Sub-CR Clock Stop Mode 126
10.4.3 Operation in Main Stop Mode and Main CR Clock Stop Mode 127
10.4.4 Setting Procedure Example 127
10.5 Registers 128
10.5.1 Watch Counter Data Register (WCDR) 128
10.5.2 Watch Counter Control Register (WCSR) 129
10.6 Notes on Using Watch Counter 130

11. Wild Register Function 131

11.1 Overview 131
11.1.1 Wild Register Function 131
11.2 Configuration 132
11.2.1 Block Diagram of Wild Register Function 132
11.3 Operations 133
11.3.1 Procedure for Setting Wild Register Function 133
11.3.2 Wild Register Function Applicable Addresses 133
11.4 Registers 134
11.4.1 Wild Register Data Setting Registers (WRDR0 to WRDR2) 135
11.4.2 Wild Register Address Setting Registers (WRAR0 to WRAR2) 136
11.4.3 Wild Register Address Compare Enable Register (WREN) 137
11.4.4 Wild Register Data Test Setting Register (WROR) 138
11.5 Typical Hardware Connection Example 138
11.5.1 Hardware Connection Example 138

12. 8/16-bit Composite Timer 139

12.1 Overview 139
12.1.1 Interval Timer Function (One-shot Mode) 139
12.1.2 Interval Timer Function (Continuous Mode) 140
12.1.3 Interval Timer Function (Free-run Mode) 140
12.1.4 PWM Timer Function (Fixed-cycle Mode) 140
12.1.5 PWM Timer Function (Variable-cycle Mode) 140
12.1.6 PWC Timer Function 140
12.1.7 Input Capture Function 140
12.2 Configuration 141
12.2.1 Block Diagram of 8/16-bit Composite Timer 141
12.2.2 Input Clock 142
12.3 Channel 143
12.3.1 Channel of 8/16-bit Composite Timer 143
12.4 Pins 144
12.4.1 Pins of 8/16-bit Composite Timer 144
12.5 Interrupts 145
12.5.1 Timer n0 Interrupt 145

12.5.2 Timer n1 Interrupt 145
12.6 Operation of Interval Timer Function (One-shot Mode) 146
12.6.1 Operation of Interval Timer Function (One-shot Mode) 146
12.7 Operation of Interval Timer Function (Continuous Mode) 147
12.7.1 Operation of Interval Timer Function (Continuous Mode) 147
12.8 Operation of Interval Timer Function (Free-run Mode) 148
12.8.1 Operation of Interval Timer Function (Free-run Mode) 148
12.9 Operation of PWM Timer Function (Fixed-cycle Mode) 149
12.9.1 Operation of PWM Timer Function (Fixed-cycle Mode) 149
12.10 Operation of PWM Timer Function (Variable-cycle Mode) 150
12.10.1 Operation of PWM Timer Function (Variable-cycle Mode) 150
12.11 Operation of PWC Timer Function 151
12.11.1 Operation of PWC Timer Function 151
12.12 Operation of Input Capture Function 153
12.12.1 Operation of Input Capture Function 153
12.13 Operation of Noise Filter 155
12.14 Registers 156
12.14.1 8/16-bit Composite Timer Status Control Register 0 (Tn0CR0/Tn1CR0) 156
12.14.2 8/16-bit Composite Timer Status Control Register 1 (Tn0CR1/Tn1CR1) 158
12.14.3 8/16-bit Composite Timer Timer Mode Control Register (TMCRn) 161
12.14.4 8/16-bit Composite Timer Data Register (Tn0DR/Tn1DR) 163
12.15 Notes on Using 8/16-bit Composite Timer 165
12.15.1 Notes on Using 8/16-bit Composite Timer 165

13. External Interrupt Circuit 167

13.1 Overview 167
13.1.1 Function of External Interrupt Circuit 167
13.2 Configuration 168
13.2.1 Block Diagram of External Interrupt Circuit 168
13.3 Channels 169
13.3.1 Channels of External Interrupt Circuit 169
13.4 Pin 170
13.4.1 Pin of External Interrupt Circuit 170
13.5 Interrupt 170
13.5.1 Interrupt during Operation of External Interrupt Circuit 170
13.6 Operations and Setting Procedure Example 171
13.6.1 Operations of External Interrupt Circuit 171
13.6.2 Setting Procedure Example 171
13.7 Register 172
13.7.1 External Interrupt Control Register (EIC) 172
13.8 Notes on Using External Interrupt Circuit 174
13.8.1 Notes on Using External Interrupt Circuit 174

14. Interrupt Pin Selection Circuit 175

14.1 Overview 175
14.1.1 Interrupt Pin Selection Circuit 175
14.2 Configuration 176
14.2.1 Block Diagram of Interrupt Pin Selection Circuit 176
14.3 Pins 177
14.3.1 Pins of Interrupt Pin Selection Circuit 177
14.4 Operation 178
14.4.1 Operation of Interrupt Pin Selection Circuit 178

14.5 Register 179
14.5.1 Interrupt Pin Selection Circuit Control Register (WICR) 179
14.6 Notes on Using Interrupt Pin Selection Circuit 182

15. LIN-UART 183

15.1 Overview 183
15.1.1 Functions of LIN-UART 183
15.2 Configuration 185
15.2.1 Block Diagram of LIN-UART 186
15.2.2 Input Clock 188
15.3 Pins 189
15.3.1 Pins of LIN-UART 189
15.4 Interrupts 190
15.4.1 Receive Interrupt 190
15.4.2 Transmit Interrupts 191
15.4.3 LIN Synch Field Edge Detection Interrupt (8/16-bit Composite Timer Interrupt) 192
15.4.4 Timing of Receive Interrupt Generation and Flag Set 193
15.4.5 Timing of Transmit Interrupt Generation and Flag Set 194
15.4.6 Timing of Transmit Interrupt Generation and Flag Set 194
15.5 LIN-UART Baud Rate 195
15.5.1 LIN-UART Baud Rate Selection 195
15.5.2 Baud Rate Setting 196
15.5.3 Reload Counter 198
15.6 Operations of LIN-UART and LIN-UART Setting Procedure Example 200
15.6.1 Operations of LIN-UART 200
15.6.2 Operations in Asynchronous Mode (Operating Mode 0, 1) 202
15.6.3 Operations in Synchronous Mode (Operating Mode 2) 205
15.6.4 Operations of LIN function (Operating Mode 3) 208
15.6.5 Serial Pin Direct Access 211
15.6.6 Bidirectional Communication Function (Normal Mode) 212
15.6.7 Master/Slave Mode Communication Function (Multiprocessor Mode) 214
15.6.8 LIN Communication Function 216
15.6.9 Examples of LIN-UART LIN Communication Flow Chart (Operating Mode 3) 217
15.7 Registers 219
15.7.1 LIN-UART Serial Control Register (SCR) 219
15.7.2 LIN-UART Serial Mode Register (SMR) 222
15.7.3 LIN-UART Serial Status Register (SSR) 224
15.7.4 LIN-UART Receive Data Register/LIN-UART Transmit Data Register (RDR/TDR) 226
15.7.5 LIN-UART Extended Status Control Register (ESCR) 227
15.7.6 LIN-UART Extended Communication Control Register (ECCR) 230
15.7.7 LIN-UART Baud Rate Generator Registers 1, 0 (BGR1, BGR0) 232
15.8 Notes on Using LIN-UART 233
15.8.1 Notes on Using LIN-UART 233

16. 8/10-bit A/D Converter 237

16.1 Overview 237
16.1.1 A/D Conversion Function 237
16.2 Configuration 238
16.2.1 Block Diagram of 8/10-bit A/D Converter 238
16.2.2 Input Clock 239
16.3 Pins 240
16.3.1 Pins of 8/10-bit A/D Converter 240

16.4 Interrupt 240
16.4.1 Interrupt During 8/10-bit A/D Converter Operation 240
16.5 Operations and Setting Procedure Example 241
16.5.1 Operations of 8/10-bit A/D Converter Conversion Function 241
16.5.2 Operations of A/D Conversion Function 242
16.5.3 Setting Procedure Example 242
16.6 Registers 243
16.6.1 8/10-bit A/D Converter Control Register 1 (ADC1) 243
16.6.2 8/10-bit A/D Converter Control Register 2 (ADC2) 245
16.6.3 8/10-bit A/D Converter Data Register (Upper/Lower) (ADDH/ADDL) 247
16.7 Notes on Using 8/10-bit A/D Converter 248
16.7.1 Notes on Using 8/10-bit A/D Converter 248

17. Low-Voltage Detection Reset Circuit 249

17.1 Overview 249
17.1.1 Low-voltage Detection Reset Circuit 249
17.2 Configuration 250
17.2.1 Block Diagram of Low-voltage Detection Reset Circuit 250
17.3 Pins 250
17.3.1 Pins of Low-voltage Detection Reset Circuit 250
17.4 Operation 251
17.4.1 Reset Threshold Voltage 251
17.4.2 Operation of Low-voltage Detection Reset Circuit 251
17.4.3 Operation in Standby Mode 251
17.5 Registers 252
17.5.1 LVD Reset Voltage Selection ID Register (LVDR) 252
17.5.2 LVD Reset Circuit Password Register (LVDPW) 253
17.5.3 LVD Reset Circuit Control Register (LVDCC) 254

18. Clock Supervisor Counter 255

18.1 Overview 255
18.1.1 Overview of Clock Supervisor Counter 255
18.2 Configuration 256
18.2.1 Block Diagram of Clock Supervisor Counter 256
18.3 Operations 258
18.3.1 Clock Supervisor Counter 258
18.3.2 Table of Time-base Timer Intervals & Clock Supervisor Counter Values 260
18.3.3 Sample Operation Flow Chart of Clock Supervisor 262
18.4 Registers 263
18.4.1 Clock Monitoring Data Register (CMDR) 263
18.4.2 Clock Monitoring Control Register (CMCR) 264
18.5 Notes on Using Clock Supervisor Counter 266
18.5.1 Notes on Using Clock Supervisor Counter 266

19. 8/16-bit PPG 269

19.1 Overview 269
19.1.1 Overview of 8/16-bit PPG 269
19.2 Configuration 270
19.2.1 Block Diagram of 8/16-bit PPG 270
19.2.2 Input Clock 271
19.3 Channel 272
19.3.1 Channel of 8/16-bit PPG 272

19.4 Pins 272
19.4.1 Pins of 8/16-bit PPG 272
19.5 Interrupt 273
19.5.1 Interrupt of 8/16-bit PPG 273
19.6 Operations and Setting Procedure Example 274
19.6.1 8-bit PPG Independent Mode 274
19.6.2 8-bit Prescaler + 8-bit PPG Mode 276
19.6.3 16-bit PPG Mode 278
19.7 Registers 281
19.7.1 8/16-bit PPG timer n1 Control Register (PCn1) 281
19.7.2 8/16-bit PPG timer n0 Control Register (PCn0) 283
19.7.3 8/16-bit PPG timer n1/n0 Cycle Setup Buffer Register (PPSn1/PPSn0) 285
19.7.4 8/16-bit PPG timer n1/n0 Duty Setup Buffer Register (PDSn1/PDSn0) 286
19.7.5 8/16-bit PPG Start Register (PPGS) 287
19.7.6 8/16-bit PPG Output Reverse Register (REVC) 289
19.8 Notes on Using 8/16-bit PPG 291
19.8.1 Notes on Using 8/16-bit PPG 291

20. 16-bit PPG Timer 293

20.1 Overview 293
20.1.1 16-bit PPG Timer 293
20.2 Configuration 294
20.2.1 Block Diagram of 16-bit PPG Timer 294
20.2.2 Input Clock 295
20.3 Channel 296
20.3.1 Channel of 16-bit PPG Timer 296
20.4 Pins 296
20.4.1 Pins of 16-bit PPG Timer 296
20.5 Interrupts 297
20.5.1 Interrupts of 16-bit PPG Timer 297
20.6 Operations and Setting Procedure Example 298
20.6.1 PWM Mode (MDSE Bit in PCNTHn Register = 0) 298
20.6.2 One-shot Mode (MDSE Bit in PCNTHn Register = 1) 300
20.6.3 Hardware Trigger 301
20.6.4 Setting Procedure Example 301
20.7 Registers 302
20.7.1 16-bit PPG Downcounter Register (Upper/Lower) ch. n (PDCRHn/PDCRLn) 302
20.7.2 16-bit PPG Cycle Setting Buffer Register (Upper/ Lower) ch. n (PCSRHn/PCSRLn) 303
20.7.3 16-bit PPG Duty Setting Buffer Register (Upper/Lower) ch. n (PDUTHn/PDUTLn) 304
20.7.4 16-bit PPG Status Control Register (Upper) ch. n (PCNTHn) 305
20.7.5 16-bit PPG Status Control Register (Lower) ch. n (PCNTLn) 307
20.8 Notes on Using 16-bit PPG Timer 309
20.8.1 Notes on Using 16-bit PPG Timer 309

21. 16-bit Reload Timer 311

21.1 Overview 311
21.1.1 Operation Modes of 16-bit Reload Timer 311
21.1.2 Internal Clock Mode 311
21.1.3 Event Count Mode (External Clock Mode) 312
21.1.4 Counter Operating Mode 312
21.2 Configuration 313

21.2.1 Block Diagram of 16-bit Reload Timer 313
21.2.2 Input Clock 314
21.3 Channel 315
21.3.1 Channel of 16-bit Reload Timer 315
21.4 Pins 315
21.4.1 Pins of 16-bit Reload Timer 315
21.5 Interrupt 316
21.5.1 Interrupt of 16-bit Reload Timer 316
21.6 Operations and Setting Procedure Example 317
21.6.1 Internal Clock Mode 319
21.6.2 Event Count Mode 323
21.7 Registers 325
21.7.1 16-bit Reload Timer Control Status Register (Upper) ch. n (TMCSRHn) 325
21.7.2 16-bit Reload Timer Control Status Register (Lower) ch. n (TMCSRLn) 327
21.7.3 16-bit Reload Timer Timer Register (Upper/Lower) ch. n (TMRHn/TMRLn) 329
21.7.4 16-bit Reload Timer Reload Register (Upper/Lower) ch. n (TMRLRHn/TMRLRLn) 330
21.8 Notes on Using 16-bit Reload Timer 330
21.8.1 Notes on Using 16-bit Reload Timer 330

22. UART/SIO 331

22.1 Overview 331
22.1.1 Functions of UART/SIO 331
22.2 Configuration 333
22.2.1 Block Diagram of UART/SIO 333
22.2.2 Input Clock 334
22.3 Channel 335
22.3.1 Channel of UART/SIO 335
22.4 Pins 335
22.4.1 Pins of UART/SIO 335
22.5 Interrupts 336
22.5.1 Interrupts of UART/SIO 336
22.5.2 Transmit Interrupt 336
22.5.3 Receive Interrupt 336
22.6 Operations and Setting Procedure Example 337
22.6.1 Operations in Operation Mode 0 338
22.6.2 Operations in Operation Mode 1 343
22.7 Registers 348
22.7.1 UART/SIO Serial Mode Control Register 1 ch. n (SMC1n) 348
22.7.2 UART/SIO Serial Mode Control Register 2 ch. n (SMC2n) 350
22.7.3 UART/SIO Serial Status and Data Register ch. n (SSRn) 352
22.7.4 UART/SIO Serial Input Data Register ch. n (RDRn) 355
22.7.5 UART/SIO Serial Output Data Register ch. n (TDRn) 355

23. UART/SIO Dedicated Baud Rate Generator 357

23.1 Overview 357
23.1.1 Block Diagram of UART/SIO Dedicated Baud Rate Generator 357
23.1.2 Input Clock 357
23.1.3 Output Clock 357
23.2 Channel 358
23.2.1 Channel of UART/SIO Dedicated Baud Rate Generator 358
23.3 Operations 358
23.3.1 Baud Rate Setting 358

23.4 Registers 360
23.4.1 UART/SIO Dedicated Baud Rate Generator Prescaler Select Register ch. n (PSSRn) . 360
23.4.2 UART/SIO Dedicated Baud Rate Generator Baud Rate Setting Register ch. n (BRSRn) 361

24. I2C Bus Interface 363

24.1 Overview 363
24.1.1 I2C Bus Interface Functions 363
24.2 Configuration 364
24.2.1 Block Diagram of I2C Bus Interface 365
24.2.2 Input Clock 366
24.3 Channel 367
24.3.1 Channel of I2C Bus Interface 367
24.4 Pins 367
24.4.1 Pins of I2C Bus Interface 367
24.5 Interrupts 368
24.5.1 Transfer Interrupt 368
24.5.2 Stop Interrupt 369
24.6 Operations and Setting Procedure Example 370
24.6.1 I2C Bus Interface 371
24.6.2 Function to Wake up the MCU from Standby Mode 378
24.7 Registers 380
24.7.1 I2C Bus Control Register 0 ch. n (IBCR0n) 380
24.7.2 I2C Bus Control Register 1 ch. n (IBCR1n) 384
24.7.3 I2C Bus Status Register ch. n (IBSRn) 388
24.7.4 I2C Data Register ch. n (IDDRn) 390
24.7.5 I2C Address Register ch. n (IAARn) 390
24.7.6 I2C Clock Control Register ch. n (ICCRn) 391
24.8 Notes on Using I2C Bus Interface 393
24.8.1 Notes on Using I2C Bus Interface 393

25. Example of Serial Programming Connection 395

25.1 Basic Configuration of Serial Programming Connection 395
25.1.1 Basic Configuration of Serial Programming Connection 395
25.2 Example of Serial Programming Connection 396
25.2.1 MCU Transiting to PGM Mode 396
25.2.2 Example of Serial Programming Connection 397

26. Dual Operation Flash Memory 399

26.1 Overview 399
26.1.1 Overview of Dual Operation Flash Memory 399
26.1.2 Features of Dual Operation Flash Memory 400
26.1.3 Programming and Erasing Flash Memory 400
26.2 Sector/Bank Configuration 401
26.2.1 Sector/Bank Configuration of Dual Operation Flash Memory 401
26.3 Invoking Flash Memory Automatic Algorithm 402
26.3.1 Command Sequence Table 402
26.3.2 Note on Issuing Commands 403
26.4 Checking Automatic Algorithm Execution Status 403
26.4.1 Hardware Sequence Flags 403
26.4.2 Data Polling Flag (DQ7) 405

26.4.3 Toggle Bit Flag (DQ6) 406
26.4.4 Execution Timeout Flag (DQ5) 407
26.4.5 Sector Erase Timer Flag (DQ3) 408
26.4.6 Toggle Bit2 Flag (DQ2) 409
26.5 Programming/Erasing Flash Memory 410
26.5.1 Details of Programming/Erasing Flash Memory 410
26.5.2 Placing Flash Memory in Read/Reset State 410
26.5.3 Programming Data to Flash Memory 411
26.5.4 Erasing All Data from Flash Memory (Chip Erase) 413
26.5.5 Erasing Specific Data from Flash Memory (Sector Erase) 414
26.5.6 Suspending Sector Erase from Flash Memory 416
26.5.7 Resuming Sector Erase of Flash Memory 417
26.5.8 Unlock Bypass Program 417
26.6 Operations 418
26.6.1 Interrupt Generated When Upper Banks Are Updated 418
26.6.2 Procedure for Setting Sector Swap Enable Bit (FSR:SSEN) 418
26.6.3 Operation during Programming/Erasing 418
26.7 Flash Security 419
26.7.1 Flash Security 419
26.8 Registers 420
26.8.1 Flash Memory Status Register 2 (FSR2) 420
26.8.2 Flash Memory Status Register (FSR) 424
26.8.3 Flash Memory Sector Write Control Register 0 (SWRE0) 427
26.8.4 Flash Memory Status Register 3 (FSR3) 429
26.8.5 Flash Memory Status Register 4 (FSR4) 431
26.9 Notes on Using Dual Operation Flash Memory 437
26.9.1 Restriction on Using Toggle Bit Flag (DQ6) 438

27. Non-Volatile Register (NVR) Interface 439

27.1 Overview 439
27.1.1 Functions of NVR Interface 439
27.2 Configuration 440
27.2.1 Block Diagram of NVR Interface 440
27.3 Registers 441
27.3.1 Main CR Clock Trimming Register (Upper) (CRTH) 441
27.3.2 Main CR Clock Trimming Register (Lower) (CRTL) 442
27.3.3 Main CR Clock Temperature Dependent Adjustment Register (CRTDA) 443
27.3.4 Watchdog Timer Selection ID Register (Upper/Lower) (WDTH/WDTL) 444
27.4 Notes on Main CR Clock Trimming 445
27.5 Notes on Using NVR Interface 446
27.5.1 Note on Changing Main CR Frequency 446
27.5.2 Note on Flash Erase and Trimming Value 446

28. Comparator 447

28.1 Overview 447
28.1.1 Function of Comparator 447
28.2 Configuration 448
28.2.1 Block Diagram of Comparator 448
28.3 Dedicated BGR 450
28.3.1 Function of Dedicated BGR 450
28.4 Pins 450
28.4.1 Pins of Comparator 450

28.5 Interrupt 450
28.5.1 Output Edge Detection Interrupt 450
28.6 Operations and Setting Procedure Example 451
28.6.1 Software Activation of Comparator (With Analog Input from External Pin) 451
28.6.2 Setting Procedure Example 451
28.6.3 Software Activation of Comparator (With Analog Input from Dedicated BGR) 452
28.6.4 Setting Procedure Example 452
28.7 Register 453
28.7.1 Comparator Control Register ch. n (CMRn) 453

29. System Configuration Controller 457

29.1 Overview 457
29.1.1 Functions of SYSC 457
29.2 Register 458
29.2.1 System Configuration Register (SYSC) 458

A. Appendix 461

A.1 Instruction Overview 461
A.1.1 Instruction Overview of F2MC-8FX 461
A.1.2 Meanings of Signs in Instruction Codes 462
A.1.3 Meanings of Items in Instruction Table 463
A.2 Addressing 464
A.2.1 Explanation of Addressing 464
A.3 Special Instruction 468
A.3.1 Special Instruction 468
A.4 Bit Manipulation Instructions (SETB, CLRB) 471
A.4.1 Read-modify-write Operation 471
A.4.2 Read Destination on the Execution of Bit Manipulation Instructions 471
A.5 F2MC-8FX Instructions 472
A.5.1 Transfer Instructions 472
A.5.2 Arithmetic Operation Instructions 474
A.5.3 Other Instructions 476
A.6 Instruction Map 477
A.6.1 Instruction Map 477

31. Major Changes 479

Revision History 481

1. Memory Access Mode

This chapter describes the memory access mode.

1.1 Memory Access Mode

1.1 Memory Access Mode

The MB95810K Series supports only one memory access mode: single-chip mode.

1.1.1 Single-chip Mode

In single-chip mode, only the internal RAM and the Flash memory are used, and no external bus access is executed.

1.1.1.1 Mode data

Mode data is the data used to determine the memory access mode of the CPU.

The mode data address is fixed at "0xFFFD". Always set the mode data of the Flash memory to "0x00" to select the single-chip mode.

Figure 1-1. Mode Data Settings

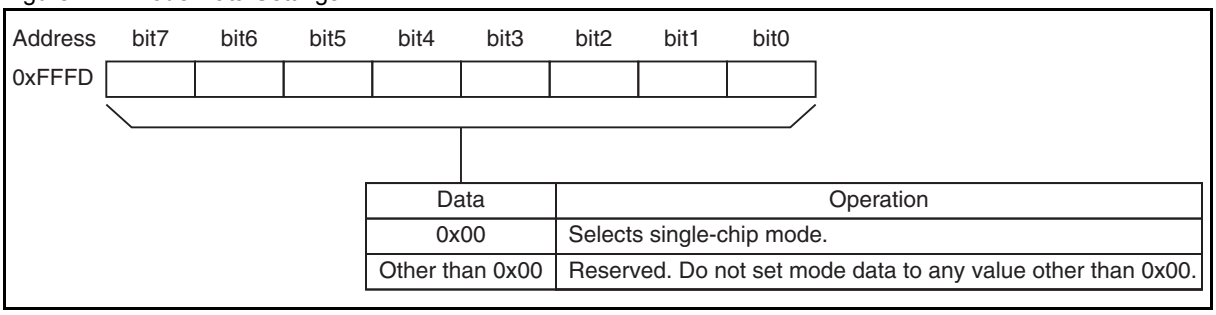

Data	Operation
0x00	Selects single-chip mode.
Other than 0x00	Reserved. Do not set mode data to any value other than 0x00.

After a reset is released, the CPU fetches mode data first.

The CPU then fetches the reset vector after the mode data. It starts executing instructions from the address set in the reset vector.

2. CPU

This chapter describes the functions and operations of the CPU.

2.1 Dedicated Registers

2.2 General-purpose Register

2.3 Placement of 16-bit Data in Memory

2.1 Dedicated Registers

The CPU has dedicated registers: a program counter (PC), two registers for arithmetic operations (A and T), three address pointers (IX, EP, and SP), and the program status (PS) register. Each of the registers is 16 bits long. The PS register consists of the register bank pointer (RP), direct bank pointer (DP), and condition code register (CCR).

Configuration of Dedicated Registers

The dedicated registers in the CPU consist of seven 16-bit registers. As for the accumulator (A) and the temporary accumulator (T), using only the lower eight bits of the respective registers is also supported.

Figure 2-1 shows the configuration of the dedicated registers.

Figure 2-1. Configuration of Dedicated Registers

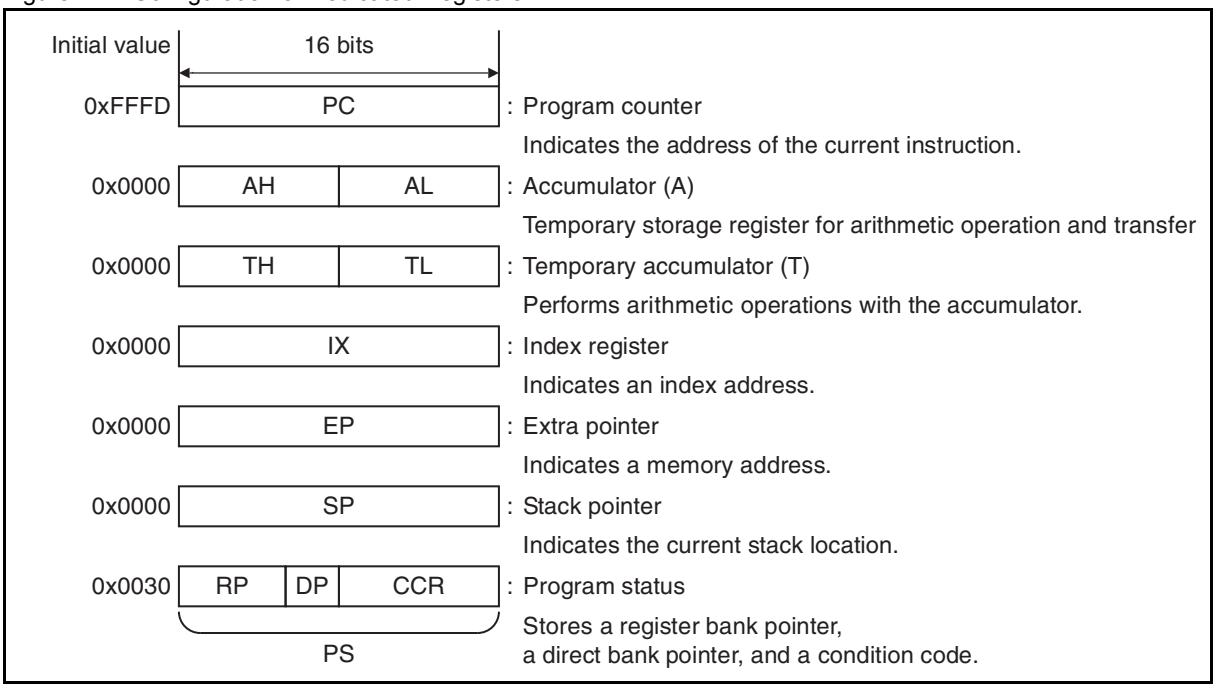

Functions of Dedicated Registers

- Program counter (PC)

The program counter is a 16-bit counter which contains the memory address of the instruction currently executed by the CPU. The program counter is updated whenever an instruction is executed or an interrupt or a reset occurs. The initial value set immediately after a reset is the mode data read address (0xFFFD).

- Accumulator (A)

The accumulator is a 16-bit register for arithmetic operation. It is used for a variety of arithmetic and transfer operations of data in memory or data in other registers such as the temporary accumulator (T). The data in the accumulator can be handled either as word (16-bit) data or byte (8-bit) data. For byte-length arithmetic and transfer operations, only the lower eight bits (AL) of the accumulator are used with the upper eight bits (AH) left unchanged. The initial value set immediately after a reset is "0x0000".

- Temporary accumulator (T)

The temporary accumulator is an auxiliary 16-bit register for arithmetic operation. It is used to perform arithmetic operations with the data in the accumulator (A). The data in the temporary accumulator is handled as word data for word-length (16-bit) operations with the accumulator (A) and as byte data for byte-length (8-bit) operations. For byte-length operations, only the lower eight bits (TL) of the temporary accumulator are used and the upper eight bits (TH) are not used.

When a MOV instruction is used to transfer data to the accumulator (A), the previous contents of the accumulator are automatically transferred to the temporary accumulator. When transferring byte-length data, the upper eight bits (TH) of the temporary accumulator remain unchanged. The initial value after a reset is "0x0000".

- Index register (IX)

The index register is a 16-bit register used to hold the index address. The index register is used with a single-byte offset (-128 to +127). The offset value is added to the index address to generate the memory address for data access. The initial value after a reset is "0x0000".

- Extra pointer (EP)

The extra pointer is a 16-bit register which contains the value indicating the memory address for data access. The initial value after a reset is "0x0000".

- Stack pointer (SP)

The stack pointer is a 16-bit register which holds the address referenced when an interrupt or a sub-routine call occurs and by the stack push and pop instructions. During program execution, the value of the stack pointer indicates the address of the most recent data pushed onto the stack. The initial value after a reset is "0x0000".

- Program status (PS)

The program status is a 16-bit control register. The upper eight bits consists of the register bank pointer (RP) and direct bank pointer (DP); the lower eight bits consists of the condition code register (CCR).

In the upper eight bits, the upper five bits consists of the register bank pointer used to contain the address of the general-purpose register bank. The lower three bits consists of the direct bank pointer which locates the area to be accessed at high-speed by direct addressing.

The lower eight bits consists of the condition code register (CCR) which consists of flags that represent the state of the CPU.

The instructions that can access the program status are "MOVW A,PS" and "MOVW PS,A". The register bank pointer (RP) and direct bank pointer (DP) in the program status register can also be read from and written to by accessing the mirror address (0x0078).

Note that the condition code register (CCR) is a part of the program status register and cannot be accessed independently.

Refer to the F^{2}MC-8FXProgramming Manual" for details on using the dedicated registers.

2.1.1 Register Bank Pointer (RP)

The register bank pointer (RP) in bit15 to bit11 of the program status (PS) register contains the address of the general-purpose register bank that is currently in use and is translated into a real address when general-purpose register addressing is used.

2.1.1.1 Configuration of Register Bank Pointer (RP)

Figure 2-2 shows the configuration of the register bank pointer.

Figure 2-2. Configuration of Register Bank Pointer

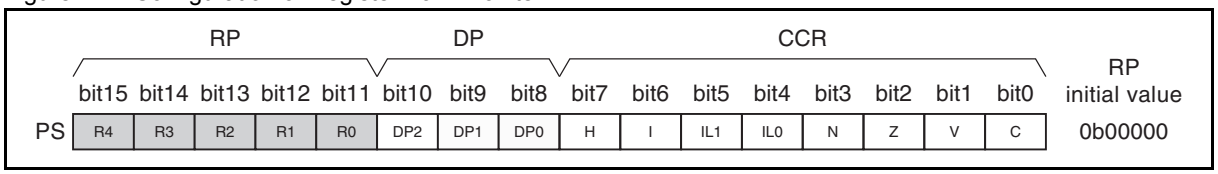

The register bank pointer contains the address of the register bank currently in use. The content of the register bank pointer is translated into a real address according to the rule shown in Figure 2-3.

Figure 2-3. Rule for Translation into Real Addresses in General-purpose Register Area

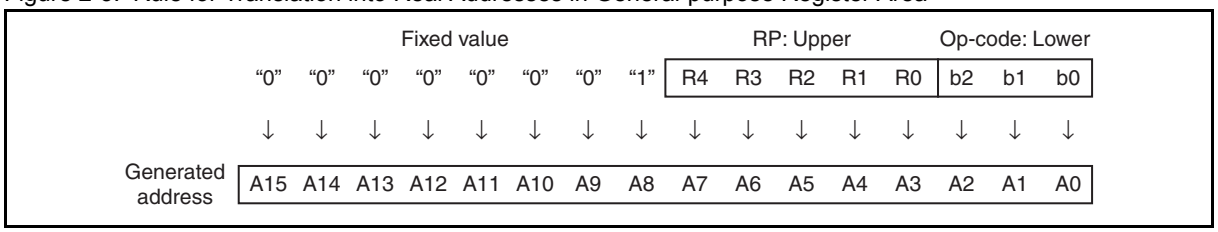

The register bank pointer specifies the register bank used as general-purpose registers in the RAM area. There are a total of 32 register banks, which are specified by setting a value between 0 and 31 in the upper five bits of the register bank pointer. Each register bank has eight 8-bit general-purpose registers which are selected by the lower three bits of the op-code.

The register bank pointer allows the space from "0x0100" to "0x01FF"(max) to be used as a general-purpose register area. However, certain products have restrictions on the size of the area available for the general-purpose register area. The initial value of the register bank pointer after a reset is "0x0000".

2.1.1.2 Mirror Address for Register Bank and Direct Bank Pointer

Values can be written to the register bank pointer (RP) and the direct bank pointer (DP) by accessing the program status (PS) register with the "MOVW PS,A" instruction; the two pointers can be read by accessing PS with the "MOVW A,PS" instruction. Values can also be directly written to and read from the two pointers by accessing "0x0078", the mirror address of the register bank pointer.

2.1.2 Direct Bank Pointer (DP)

The direct bank pointer (DP) in bit10 to bit8 of the program status (PS) register specifies the area to be accessed by direct addressing.

2.1.2.1 Configuration of Direct Bank Pointer (DP)

Figure 2-4 shows the configuration of the direct bank pointer.

Figure 2-4. Configuration of Direct Bank Pointer

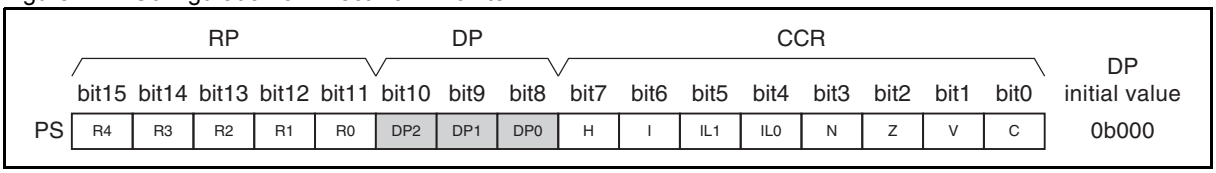

The area of "0x0000 to 0x007F" and that of "0x0090 to 0x047F" can be accessed by direct addressing. Access to 0x0000 to 0x007F is specified by an operand regardless of the value in the direct bank pointer. Access to 0x0090 to 0x047F is specified by the value of the direct bank pointer and the operand.

Table 2-1 shows the relationship between the direct bank pointer (DP) and the access area; Table 2-2 lists the direct addressing instructions.

Table 2-1. Direct Bank Pointer and Access Area

Direct bank pointer (DP[2:0])	Operand-specified dir	Access area[a]
0bXXX (It does not affect mapping.)	0x0000 to 0x007F	0x0000 to 0x007F
0b000 (Initial value)	0x0090 to 0x00FF	0x0090 to 0x00FF
0b001	0x0080 to 0x00FF	0x0100 to 0x017F
0b010		0x0180 to 0x01FF
0b011		0x0200 to 0x027F
0b100		0x0280 to 0x02FF
0b101		0x0300 to 0x037F
0b110		0x0380 to 0x03FF
0b111		0x0400 to 0x047F

a. The available access area varies among products. For details, refer to the device data sheet.

Table 2-2. Direct Address Instruction List

Applicable instructions
CLRB dir:bit
SETB dir:bit
BBC dir:bit,rel
BBS dir:bit,rel
MOV A,dir
CMP A,dir
ADDC A,dir
SUBC A,dir
MOV dir,A
XOR A,dir
AND A,dir
OR A,dir
MOV dir,#imm
CMP dir,#imm
MOVW A,dir
MOVW dir,A

2.1.3 Condition Code Register (CCR)

The condition code register (CCR) in the lower eight bits of the program status (PS) register consists of the bits (H, N, Z, V, and C) containing information about the arithmetic result or transfer data and the bits (I, IL1, and IL0) used to control the acceptance of interrupt requests.

2.1.4 Configuration of Condition Code Register (CCR)

Figure 2-5. Configuration of Condition Code Register (CCR)

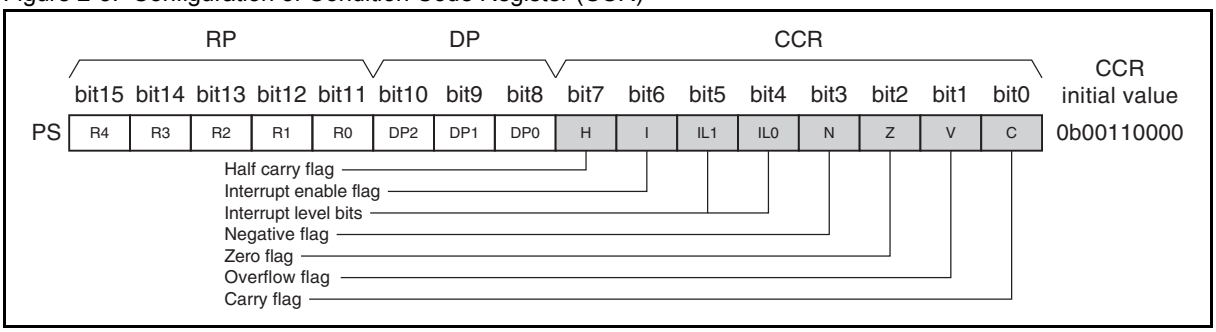

The condition code register is a part of the program status (PS) register and therefore cannot be accessed independently.

2.1.5 Bits Showing Operation Results

Half carry flag (H)

This flag is set to "1" when a carry from bit3 to bit4 or a borrow from bit4 to bit3 occurs due to the result of an operation. Otherwise, the flag is set to "0". Do not use this flag for any operation other than addition and subtraction as the flag is intended for decimal-adjusted instructions.

Negative flag (N)

This flag is set to "1" when the value of the most significant bit is "1" due to the result of an operation, and is set to "0" when the value of the most significant bit is "0".

Zero flag (Z)

This flag is set to "1" when the result of an operation is "0", and is set to "0" when the result of an operation is a value other than "0".

Overflow flag (V)

This flag indicates whether the result of an operation has caused an overflow, with the operand used in the operation being regarded as an integer expressed as a complement of two. If an overflow occurs, the overflow flag is set to "1"; otherwise, it is set to "0".

Carry flag (C)

This flag is set to "1" when a carry from bit7 or a borrow to bit7 occurs due to the result of an operation. Otherwise, the flag is set to "0". When a shift instruction is executed, the flag is set to the shift-out value.

Figure 2-6 shows how the carry flag is updated by a shift instruction.

Figure 2-6. Carry Flag Updated by Shift Instruction

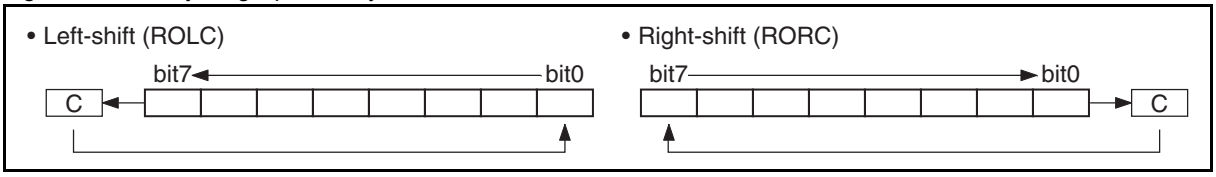

2.1.6 Interrupt Acceptance Control Bits

Interrupt enable flag (I)

When this flag is set to "1", interrupts are enabled and accepted by the CPU. When this flag is set to "0", interrupts are disabled and rejected by the CPU.

The initial value after a reset is "0".

The SETI and CLRI instructions set and clear the flag to "1" and "0", respectively.

Interrupt level bits (IL[1:0])

These bits indicate the level of the interrupt currently accepted by the CPU.

The interrupt level is compared with the value of the interrupt level setting register (ILR0 to ILR5) that corresponds to the interrupt request (IRQ00 to IRQ23) of each peripheral function.

The CPU services an interrupt request only when its interrupt level is smaller than the value of these bits with the interrupt enable flag set (CCR:I = 1). Table 2-3 lists interrupt level priorities. The initial value after a reset is "0b11".

Table 2-3. Interrupt Levels

IL1	IL0	Interrupt level	Priority
0	0	0	High
0	1	1	↕
1	0	2	
1	1	3	Low (No interrupt)

The interrupt level bits (IL[1:0]) are usually "0b11" when the CPU does not service an interrupt (with the main program running).

For details of interrupts, see 5.1 Interrupts.

2.2 General-purpose Register

The general-purpose registers are a memory block in which each bank consists of eight 8-bit registers. Up to 32 register banks can be used in total. The register bank pointer (RP) is used to specify a register bank.

Register banks are useful for interrupt handling, vector call processing, and sub-routine calls.

2.2.1 Configuration of General-purpose Register

- The general-purpose register is an 8-bit register and is located in a register bank in the general-purpose register area (in RAM).
- Up to 32 banks can be used, each of which consists of eight registers (R0 to R7).
- The register bank pointer (RP) specifies the register bank currently being used and the lower three bits of the op-code specify the general-purpose register 0 (R0) to the general-purpose register 7 (R7).

Figure 2-7 shows the configuration of the register banks.

Figure 2-7. Configuration of Register Banks

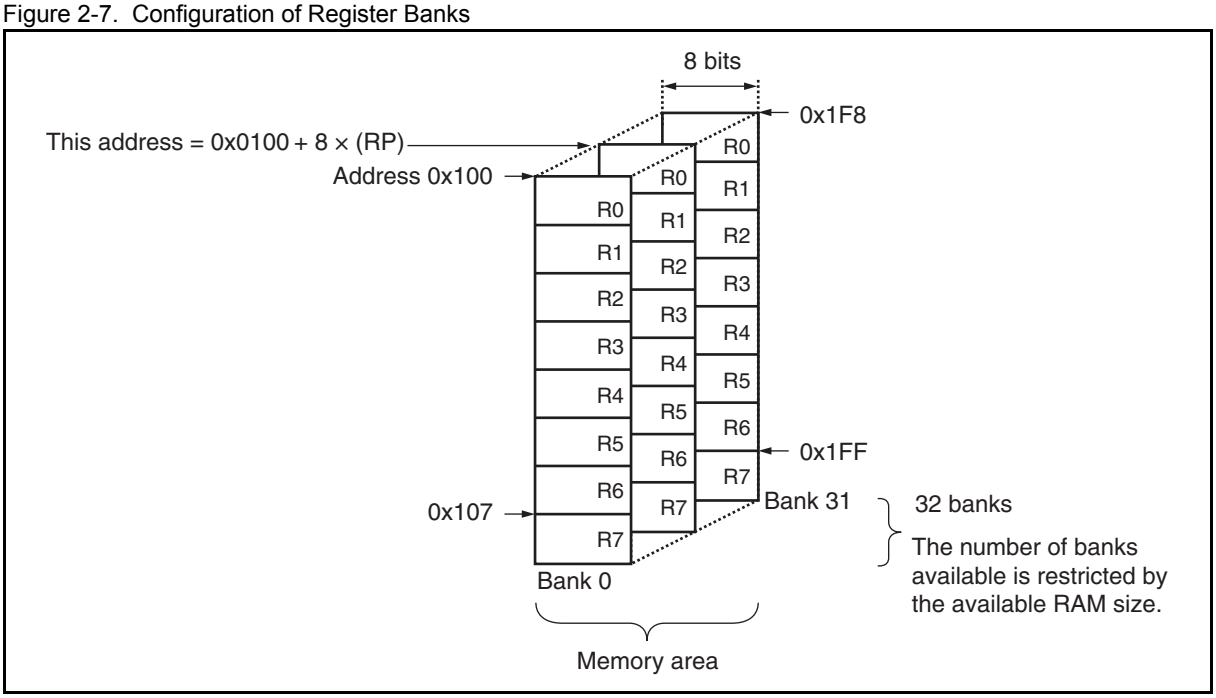

For information on the general-purpose register area available on each product, see "Areas For Specific Applications" in the device data sheet.

2.2.2 Features of General-purpose Registers

The general-purpose register has the following features.

- High-speed access to RAM with short instructions (general-purpose register addressing).
- Grouping registers into a block of register banks facilitates data protection and division of registers in terms of functions.

A general-purpose register bank can be allocated exclusively to an interrupt service routine or a vector call (CALLV #0 to #7) service routine. For instance, the fourth register bank is always assigned to the second interrupt.

Data of a general-purpose register before an interrupt can be saved to a dedicated register bank by just specifying that register bank at the beginning of an interrupt service routine. This therefore eliminates the need to save data of a general-purpose register in a stack, thereby enabling the CPU to receive interrupts at high speed.

Note:

In an interrupt service routine, include one of the following in a program to ensure that values of the interrupt level bits (CCR:IL[1:0]) of the condition code register are not modified when modifying a register bank pointer (RP) to specify a register bank.

- Read the interrupt level bits and save their values before writing a value to the RP.
- Directly write a new value to the RP mirror address "0x0078" to update the RP.
- As for a product whose RAM size is 256 bytes, the area available for general-purpose registers is from "0x0100" to "0x018F", which is half of that of the product whose RAM size is 512 bytes or above. Therefore, when using a program development tool such as a C compiler to set a general-purpose register area, ensure that the area used as a general-purpose register area does not exceed the size of RAM installed.

2.3 Placement of 16-bit Data in Memory

This section describes how 16-bit data is stored in memory.

2.3.1 Placement of 16-bit Data in Memory

- State of 16-bit data stored in RAM

When 16-bit data is written to memory, the upper byte of the data is stored at a smaller address and the lower byte is stored at the next address. When 16-bit data is read, it is handled in the same way.

Figure 2-8 shows how 16-bit data is placed in memory.

Figure 2-8. 8Placement of 16-bit Data in Memory

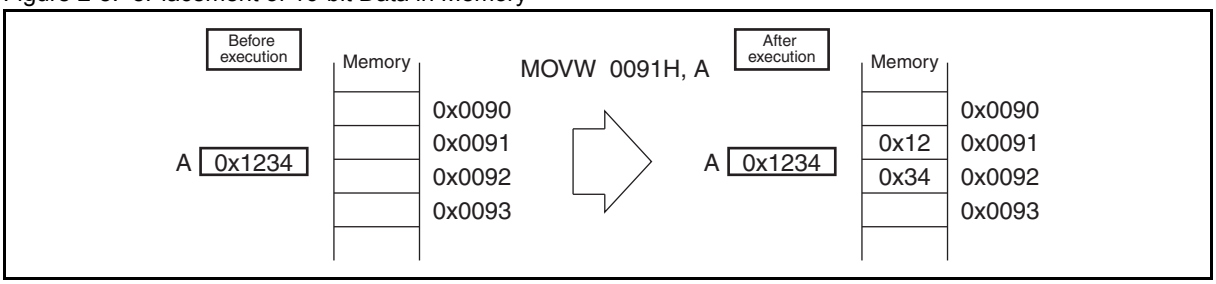

- Storage state of 16-bit data specified by an operand

Even when the operand in an instruction specifies 16-bit data, the upper byte is stored at the address closer to the op-code (instruction) and the lower byte is stored at the address next to the one at which the upper byte is stored.

That is true whether an operand is either a memory address or 16-bit immediate data.

Figure 2-9 shows how 16-bit data in an instruction is placed.

Figure 2-9. Placement of 16-bit Data in Instruction

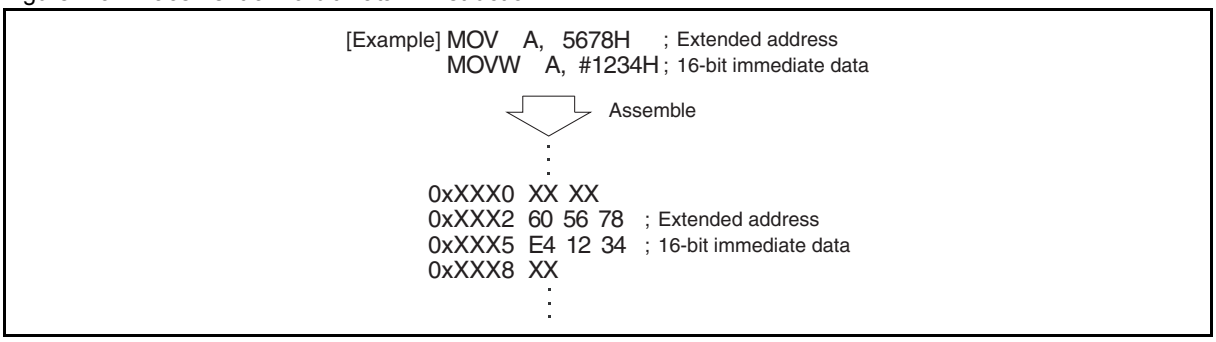

- Storage state of 16-bit data in the stack

When 16-bit register data is saved in a stack on an interrupt, the upper byte is stored at a lower address in the same way as 16-bit data specified by an operand.

3. Clock Controller

This chapter describes the functions and operations of the clock controller.

3.1 Overview
3.2 Oscillation Stabilization Wait Time
3.3 Registers
3.4 Clock Modes
3.5 Operations in Low Power Consumption Mode (Standby Mode)
3.6 Clock Oscillator Circuit
3.7 Overview of Prescaler
3.8 Configuration of Prescaler
3.9 Operation of Prescaler
3.10 Notes on Using Prescaler

3.1 Overview

The New 8FX family has a built-in clock controller that optimizes its power consumption. It supports both of the external main clock and the external subclock.
The clock controller enables/disables clock oscillation, enables/disables the supply of clock signals to the internal circuit, selects the clock source, and controls the internal CR oscillator and frequency divider circuits.

3.1.1 Overview of Clock Controller

The clock controller enables/disables clock oscillation, enables/disables clock supply to the internal circuit, selects the clock source, and controls the internal CR oscillator and frequency divider circuits.

The clock controller controls the internal clock according to the clock mode, standby mode settings and the reset operation. The clock mode is used to select an internal operating clock; the standby mode is used to enable or disable clock oscillation and signal supply.

The clock controller selects the optimum power consumption and functions depending on the combination of clock mode and standby mode.

This device has five source clocks: a main clock formed by dividing the main oscillation clock by two, a subclock formed by dividing the suboscillation clock by two, a main CR clock, a main CR PLL clock formed by multiplying the main CR oscillation clock by the PLL multiplication rate, and a sub-CR clock formed by dividing the sub-CR oscillation clock by two.

3.1.2 Block Diagram of Clock Controller

Figure 3-1 is the block diagram of the clock controller.

Figure 3-1. Block Diagram of Clock Controller

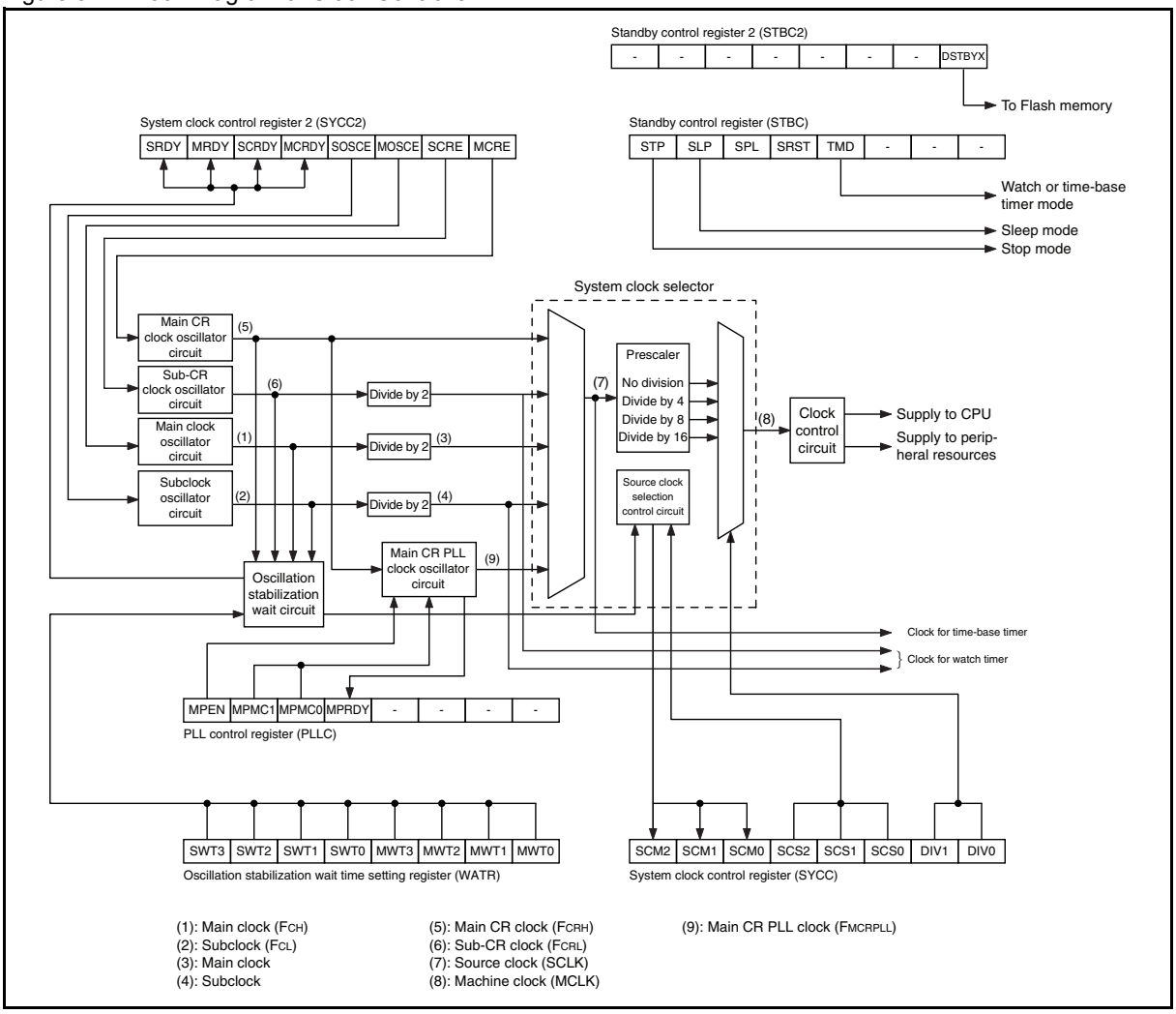

3.1.3 Configuration of Clock Controller

- Main clock oscillator circuit

This block is the oscillator circuit for the main clock.

- Subclock oscillator circuit

This block is the oscillator circuit for the subclock.

- Main CR clock oscillator circuit

This block is the oscillator circuit for the main CR clock.

- Main CR PLL clock oscillator circuit

This block is the oscillator circuit for the main CR PLL clock.

- Sub-CR clock oscillator circuit

This block is the oscillator circuit for the sub-CR clock.

- System clock selector

This block selects a clock according to the clock mode used from the following five types of source clock: main clock, subclock, main CR clock, main CR PLL clock and sub-CR clock. The source clock selected is divided by the prescaler. The divided clock is called "machine clock", which is to be supplied to the clock control circuit.

- Clock control circuit

This block controls the supply of the machine clock to the CPU and each peripheral function according to the standby mode used or oscillation stabilization wait time.

- Oscillation stabilization wait circuit

This block outputs oscillation stabilization wait time signals according to clocks that are enabled to operate.

In the case of main clock, its oscillation stabilization signal can be selected from 14 types of oscillation stabilization signals created by a dedicated timer in the oscillation stabilization wait circuit. In case of subclock, its oscillation stabilization signal can be selected from 15 types of oscillation stabilization signals created by the same dedicated timer.

- System clock control register (SYCC)

This register selects a clock mode and a machine clock divide ratio, and indicates the current clock mode.

- PLL control register (PLLC)

This register controls the main CR PLL clock multiplication rate settings.

- Standby control register (STBC)

This register controls the transition from RUN state to standby mode, the setting of pin states in stop mode, time-base timer mode, or watch mode, and the generation of software resets.

- System clock control register 2 (SYCC2)

This register enables or disables the oscillations of the main clock, main CR clock, subclock, and sub-CR clock, and displays the ready signals of main clock oscillation, main CR clock oscillation, subclock oscillation and sub-CR clock oscillation.

- Oscillation stabilization wait time setting register (WATR)

This register sets the oscillation stabilization wait times for the main clock and subclock.

- Standby control register 2 (STBC2)

This register controls the deep standby mode.

3.1.4 Clock Modes

There are five clock modes:

- Main clock mode
- Main CR clock mode
- Main CR PLL clock mode
- Subclock mode
- Sub-CR clock mode.

Table 3-1 shows the relationships between the clock modes and the machine clock (operating clock for the CPU and peripheral functions).

Table 3-1. Clock Modes and Machine Clock Selection

Clock mode	Machine clock
Main clock mode	The machine clock is generated by dividing the main clock by two.
Main CR clock mode	The machine clock is generated from the main CR clock.
Main CR PLL clock mode	The machine clock is generated by multiplying the main CR clock by a PLL multiplication rate.
Subclock mode	The machine clock is generated by dividing the subclock by two.
Sub-CR clock mode	The machine clock is generated by dividing the sub-CR clock by two.

In any clock mode, the frequency of a selected clock can be divided.

3.1.5 Standby Mode

The clock controller selects whether to enable or disable clock oscillation and clock supply to the internal circuitry according to the standby mode selected. With the exception of time-base timer mode and watch mode, the standby mode can be set independently of the clock mode.

Table 3-2 shows the relationships between standby modes and clock supply states.

Table 3-2. Standby Mode and Clock Supply States

Standby mode	Clock supply state
Sleep mode	Clock supply to the CPU is stopped. As a result, the CPU stops operating, but other peripheral functions continue operating.
Time-base timer mode	Clock signals are only supplied to the time-base timer and the watch prescaler, while the clock supply to other circuits is stopped. As a result, all the functions other than the time-base timer, watch prescaler, external interrupt, and low-voltage detection reset (option) are stopped. The time-base timer mode can be used in main clock mode, main CR clock mode and main CR PLL clock mode.
Watch mode	Main clock oscillation is stopped. Clock signals are supplied only to the watch prescaler, while clock supply to other circuits is stopped. As a result, all the functions other than the watch prescaler, external interrupt, and low-voltage detection reset (option) are stopped. The watch mode is the standby mode that can be used in subclock mode and sub-CR clock mode.
Stop mode	Main clock oscillation and subclock oscillation are stopped, and clock supply to all circuits is stopped. As a result, all the functions other than external interrupt and low-voltage detection reset (option) are stopped.

In every standby mode, two further operating mode options, normal standby mode and deep standby mode, can be selected by the deep standby mode control bit in the standby control register 2 (STBC2:DSTBYX).

For details, see 3.5.1 Notes on Using Standby Mode.

Note:

Clocks that are not mentioned in Table 3-2 are supplied under particular settings.
For example, with main clock mode being used in stop mode, when SYCC2:SOSCE or SYCC2:SCRE has been set to "1", the watch prescaler continues its operation.

In addition, with the hardware watchdog timer already started, the watchdog timer operates also in standby mode, depending on the settings of the non-volatile register (NVR) interface. For details of the non-volatile register (NVR) interface, see Chapter 27. Non-Volatile Register (NVR) Interface

3.1.6 Combinations of Clock Mode and Standby Mode

Table 3-3 and Table 3-4 list the combinations of clock mode and standby mode, and the respective operating states of different internal circuits with different combinations of clock mode and standby mode.

Table 3-3. Combinations of Standby Mode and Clock Mode, and Internal Operating States (1)

Function	RUN				Sleep			
	Main clock mode	Main CR clock mode/ Main CR PLL clock mode	Subclock mode	Sub-CR clock mode	Main clock mode	Main CR clock mode/ Main CR PLL clock mode	Subclock mode	Sub-CR clock mode
Main clock	Operating	Stopped[1]	Stopped		Operating	Stopped[1]	Stopped	
Main CR clock/ Main CR PLL clock	Stopped[2]	Operating	Stopped		Stopped[2]	Operating	Stopped	
Subclock	Operating[3]		Operating	Operating[3]	Operating[3]		Operating	Operating[3]
Sub-CR clock	Operating[4]		Operating[4]	Operating	Operating[4]		Operating[4]	Operating
CPU	Operating		Operating		Stopped		Stopped	
Flash memory	Operating		Operating		Value held[6]		Value held[6]	
RAM	Operating		Operating		Value held		Value held	
I/O ports	Operating		Operating		Output held		Output held	
Time-base timer	Operating		Stopped		Operating		Stopped	
Watch prescaler	Operating[3], [4]		Operating		Operating[3], [4]		Operating	
External interrupt	Operating		Operating		Operating		Operating	
Hardware watch-dog timer	Operating		Operating		Operating[5]		Operating[5]	
Software watch-dog timer	Operating		Operating		Stopped		Stopped	
Low-voltage detection reset	Operating		Operating		Operating		Operating	
Other peripheral functions	Operating		Operating		Operating		Operating	

[1]: The main clock runs when the main clock oscillation enable bit in the system clock control register 2 (SYCC2:MOSCE) is set to "1".
[2]: The main CR clock or the main CR PLL clock runs when main CR clock oscillation enable bit in the system clock control register 2 (SYCC2:MCRE) is set to "1".
[3]: The module runs when the subclock oscillation enable bit in the system clock control register 2 (SYCC2:SOSCE) is set to "1".
[4]: The module runs when the sub-CR clock oscillation enable bit in the system clock control register 2 (SYCC2:SCRE) is set to "1".
[5]: The hardware watchdog timer stops when the hardware watchdog timer is disabled by the non-volatile register (NVR) interface.
[6]: The state of the Flash memory in a standby mode can be selected from two options, normal state and low-power state, by the deep standby mode control bit in the standby control register 2 (STBC2:DSTBYX).

Table 3-4. Combinations of Standby Mode and Clock Mode and Internal Operating States (2)

Function	Time-base timer		Watch		Stop			
	Main clock mode	Main CR clock mode/ Main CR PLL clock mode	Subclock mode	Sub-CR clock mode	Main clock mode	Main CR clock mode/ Main CR PLL clock mode	Subclock mode	Sub-CR clock mode
Main clock	Operating	Stopped[1]	Stopped		Stopped			
Main CR clock/ Main CR PLL clock	Stopped[2]	Operating	Stopped		Stopped			
Subclock	Operating[3]		Operating	Operating[3]	Operating[3]		Stopped	
Sub-CR clock	Operating[4]		Operating[4]	Operating	Operating[4]		Stopped	
CPU	Stopped		Stopped		Stopped			
Flash memory	Value held[6]		Value held[6]		Value held[6]			
RAM	Value held		Value held		Value held			
I/O ports	Output held / Hi-Z		Output held/Hi-Z		Output held/Hi-Z			
Time-base timer	Operating		Stopped		Stopped			
Watch prescaler	Operating [3] [4]		Operating		Operating [3], [4]		Stopped	
External interrupt	Operating		Operating		Operating			
Hardware watch-dog timer	Operating[5]		Operating[5]		Operating[5]			
Software watch-dog timer	Stopped		Stopped		Stopped			
Low-voltage detection reset	Operating		Operating		Operating			
Other peripheral functions	Stopped		Stopped		Stopped			

[1]: The main clock runs when the main clock oscillation enable bit in the system clock control register 2 (SYCC2:MOSCE) is set to "1".
[2]: The main CR clock or the main CR PLL clock runs when main CR clock oscillation enable bit in the system clock control register 2 (SYCC2:MCRE) is set to "1".
[3]: The module runs when the subclock oscillation enable bit in the system clock control register 2 (SYCC2:SOSCE) is set to "1".
[4]: The module runs when the sub-CR clock oscillation enable bit in the system clock control register 2 (SYCC2:SCRE) is set to "1".
[5]: The hardware watchdog timer stops when the hardware watchdog timer is disabled by the non-volatile register (NVR) interface.
[6]: The state of the Flash memory in a standby mode can be selected from two options, normal state and low-power state, by the deep standby mode control bit in the standby control register 2 (STBC2:DSTBYX).

3.2 Oscillation Stabilization Wait Time

The oscillation stabilization wait time is the time after the oscillator circuit stops oscillation until the oscillator resumes its stable oscillation at its natural frequency. The clock controller obtains the oscillation stabilization wait time after the start of oscillation by counting a specific number of oscillation clock cycles. During the oscillation stabilization wait time, the clock controller stops clock supply to internal circuits.

3.2.1 Oscillation Stabilization Wait Time

The clock controller obtains the oscillation stabilization wait time after the start of oscillation by counting a specific number of oscillation clock cycles. During the oscillation stabilization wait time, the clock controller stops clock supply to internal circuits.

When the power is switched on, or when a state transition request making the oscillator start from the oscillation stop state is generated due to a change of clock mode caused by a reset, by an interrupt in stop mode or by the software operation, before making the clock mode transit to another mode, the clock controller automatically waits for the oscillation stabilization wait time of the clock for that mode to elapse.

Figure 3-2 shows how the oscillator runs immediately after starting oscillating.

Figure 3-2. Behavior of Oscillator Immediately after Starting Oscillation

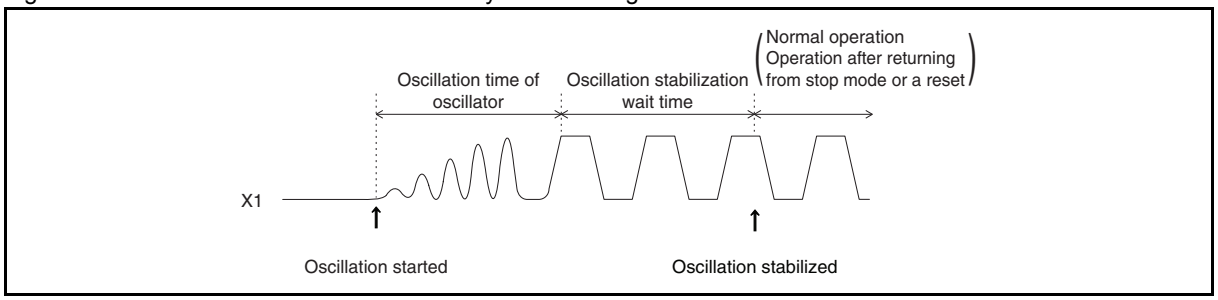

Oscillation stabilization wait time of main clock, subclock, main CR clock, main CR PLL clock or sub-CR clock is counted by using a dedicated counter. The count value can be set in the oscillation stabilization wait time setting register (WATR). Set it in keeping with the oscillator characteristics.

When a power-on reset occurs, the oscillation stabilization wait time is fixed at the initial value.

Table 3-5 shows the length of oscillation stabilization wait time.

Table 3-5. Oscillation Stabilization Wait Time

Clock	Reset source	Oscillation stabilization wait time
Main clock	Power-on reset	Initial value: $(2^{14}-2)/F_{CH}$ (F_{CH}: main clock frequency)
	Other than power-on reset	Register settings (WATR:MWT[3:0])
Subclock	Power-on reset	Initial value: $(2^{15}-2)/F_{CL}$ (F_{CL}: subclock frequency)
	Other than power-on reset	Register settings (WATR:SWT[3:0])

3.2.2 PLL Clock Oscillation Stabilization Wait Time

As with the oscillation stabilization wait time of the oscillator, when a request for state transition from PLL oscillation stopped state to PLL oscillation start is generated due to an interrupt in stop mode or a change of clock mode by software, the clock controller first waits for the main CR clock oscillation stabilization wait time to elapse, and then automatically waits for the PLL clock oscillation stabilization wait time to elapse.

Table 3-6 shows the PLL oscillation stabilization wait time.

Table 3-6. PLL Oscillation Stabilization Wait Time

	PLL oscillation stabilization wait time
Main CR PLL clock	$2^{12}/F_{MCRPLL}$ [a]

a. F_{MCRPLL} = 16 MHz

3.2.3 CR Clock Oscillation Stabilization Wait Time

As with the oscillation stabilization wait time of the oscillator, when a state transition request making CR oscillation start from the CR oscillation stop state is generated due to a change of clock mode caused by an interrupt in standby mode or by the software operation, the clock controller automatically waits for the CR oscillation stabilization wait time to elapse.

Table 3-7 shows the CR oscillation stabilization wait time.

Table 3-7. CR Oscillation Stabilization Wait Time

	CR oscillation stabilization wait time
Main CR clock	$2^{10}/F_{CRH}$ [a]
Sub-CR clock	$2^{5}/F_{CRL}$ [b]

a. F_{CRH} = 4 MHz
b. F_{CRL} = 150 kHz

3.2.4 Oscillation Stabilization Wait Time and Clock Mode/Standby Mode Transition

If state transition occurs, the clock controller automatically waits for the oscillation stabilization wait time to elapse whenever necessary. Depending on the circumstances under which state transition occurs, the clock controller does not wait for the oscillation stabilization wait time to elapse even if state transition occurs.

For details on state transition, see 3.4 Clock Modes and 3.5 Operations in Low Power Consumption Mode (Standby Mode).

3.2.5 Order of Priority for Oscillation Stabilization Wait Times

When multiple clocks are enabled simultaneously, the clock controller counts the respective oscillation stabilization wait times of clocks according to a designated order of priority. Below are the respective orders of priority for counting different oscillation stabilization wait times in different clock modes.

- Main clock mode
  Sub-CR clock > Subclock > Main CR clock > Main CR PLL clock
- Main CR clock mode
  Sub-CR clock > Subclock > Main CR PLL clock > Main clock
- Main CR PLL clock mode
  Sub-CR clock > Subclock > Main clock
- Subclock mode
  Sub-CR clock > Main CR clock or main clock > Main CR PLL clock
- Sub-CR clock mode
  Main CR clock or main clock > Subclock > Main CR PLL clock

3.3 Registers

This section provides details of registers of the clock controller.
Table 3-8. List of Clock Controller Registers

Register abbreviation	Register name	Reference
SYCC	System clock control register	3.3.1
PLLC	PLL control register	3.3.2
WATR	Oscillation stabilization wait time setting register	3.3.3
STBC	Standby control register	3.3.4
SYCC2	System clock control register 2	3.3.5
STBC2	Standby control register 2	3.3.6

3.3.1 System Clock Control Register (SYCC)

The system clock control register (SYCC) selects a machine clock divide ratio and a clock mode, and indicates the current clock mode.

Register Configuration

bit	7	6	5	4	3	2	1	0
Field	SCM2	SCM1	SCM0	SCS2	SCS1	SCS0	DIV1	DIV0
Attribute	R	R	R	R/W	R/W	R/W	R/W	R/W
Initial value	X	X	X	1	1	0	1	1

Register Functions

[bit7:5] SCM[2:0]: Clock mode monitor bits

These bits indicate the current clock mode.

These bits are read-only bits. Writing values to these bits has no effect on operation.

bit7:5	Details
Reading "000"	Indicates that the current clock mode is subclock mode.
Reading "010"	Indicates that the current clock mode is main clock mode.
Reading "100"	Indicates that the current clock mode is sub-CR clock mode.
Reading "110"	Indicates that the current clock mode is main CR clock mode.
Reading "111"	Indicates that the current clock mode is main CR PLL clock mode.

[bit4:2] SCS[2:0]: Clock mode select bits

These bits select a clock mode.

bit4:2	Details
Writing "000"	Selects subclock mode.
Writing "010"	Selects main clock mode.
Writing "100"	Selects sub-CR clock mode.
Writing "110"	Selects main CR clock mode.
Writing "111"	Selects main CR PLL clock mode.

Note:

Do not write to SCS[2:0] any value other than those listed in the table above.

[bit1:0] DIV[1:0]: Machine clock divide ratio select bits

These bits select the machine clock divide ratio for the source clock.

The machine clock is generated from the source clock according to the divide ratio set by these bits.

bit1:0	Details
Writing "00"	Source clock (no division)
Writing "01"	Source clock/4
Writing "10"	Source clock/8
Writing "11"	Source clock/16

3.3.2 PLL Control Register (PLLC)

The PLL control register (PLLC) controls the main CR PLL clock multiplication rate settings.

Register Configuration

bit	7	6	5	4	3	2	1	0
Field	MPEN	MPMC1	MPMC0	MPRDY	—	—	—	—
Attribute	R/W	R/W	R/W	R	—	—	—	—
Initial value	0	0	0	X	0	0	0	0

Register Functions

[bit7] MPEN: Main CR PLL clock enable bit

This bit enables or disables the main CR PLL clock.

When SCS[2:0] are set to "0b111", this bit is automatically set to "1".

When SCS[2:0] or SCM[2:0] are set to "0b111", writing "0" to this bit has no effect on operation.

This bit is automatically set to "0" when the clock mode transits from one mode to another mode except main CR PLL clock mode.

When the current clock mode is subclock mode or sub-CR clock mode, writing "1" to this bit has no effect on operation.

bit7	Details
Writing "0"	Disables the main CR PLL clock.
Writing "1"	Enables the main CR PLL clock.

[bit6:5] MPMC[1:0]: Main CR PLL clock multiplication rate select bits

These bits select a main CR PLL clock multiplication rate.

The settings of these bits can be modified only when the main CR PLL clock is stopped. Thus these bits can be modified in main clock mode, main CR clock mode, subclock mode or sub-CR clock mode.

bit6:5	Details
Writing "00"	Main CR clock × 2
Writing "01"	Main CR clock × 2.5
Writing "10"	Main CR clock × 3
Writing "11"	Main CR clock × 4

Note:

When SCS[2:0] or SCM[2:0] are set to "0b111", writing values to MPMC[1:0] is prohibited.

[bit4] MPRDY: Main CR PLL clock oscillation stabilization bit

This bit indicates whether the main CR PLL clock oscillation is ready.

bit4	Details
Reading "0"	Indicates that main CR PLL clock is in the oscillation stabilization wait state or that the main CR PLL clock oscillation has stopped.
Reading "1"	Indicates that the main CR PLL clock oscillation wait time is over.

[bit3:0] Undefined bits

Their read values are always "0". Writing values to these bits has no effect on operation.

3.3.3 Oscillation Stabilization Wait Time Setting Register (WATR)

The oscillation stabilization wait time setting register (WATR) sets oscillation stabilization wait times.

Register Configuration

bit	7	6	5	4	3	2	1	0
Field	SWT3	SWT2	SWT1	SWT0	MWT3	MWT2	MWT1	MWT0
Attribute	R/W	R/W	R/W	R/W	R/W	R/W	R/W	R/W
Initial value	1	1	1	1	1	1	1	1

Register Functions

[bit7:4] SWT[3:0]: Subclock oscillation stabilization wait time select bits

These bits select the subclock oscillation stabilization wait time.

bit7:4	Details		
	No. of cycles	Subclock (F_{CL}) = 32.768 kHz	
Writing "1111"	2^{15} - 2	$(2^{15}-2)/F_{CL}$	About 1.0 s
Writing "1110"	2^{14} - 2	$(2^{14}-2)/F_{CL}$	About 0.5 s
Writing "1101"	2^{13} - 2	$(2^{13}-2)/F_{CL}$	About 0.25 s
Writing "1100"	2^{12} - 2	$(2^{12}-2)/F_{CL}$	About 0.125 s
Writing "1011"	2^{11} - 2	$(2^{11}-2)/F_{CL}$	About 62.44 ms
Writing "1010"	2^{10} - 2	$(2^{10}-2)/F_{CL}$	About 31.19 ms
Writing "1001"	2^{9} - 2	$(2^{9}-2)/F_{CL}$	About 15.56 ms
Writing "1000"	2^{8} - 2	$(2^{8}-2)/F_{CL}$	About 7.75 ms
Writing "0111"	2^{7} - 2	$(2^{7}-2)/F_{CL}$	About 3.85 ms
Writing "0110"	2^{6} - 2	$(2^{6}-2)/F_{CL}$	About 1.89 ms
Writing "0101"	2^{5} - 2	$(2^{5}-2)/F_{CL}$	About 915.5 µs
Writing "0100"	2^{4} - 2	$(2^{4}-2)/F_{CL}$	About 427.2 µs
Writing "0011"	2^{3} - 2	$(2^{3}-2)/F_{CL}$	About 183.1 µs
Writing "0010"	2^{2} - 2	$(2^{2}-2)/F_{CL}$	About 61.0 µs
Writing "0001"	2^{1} - 2	$(2^{1}-2)/F_{CL}$	0.0 µs
Writing "0000"	2^{1} - 2	$(2^{1}-2)/F_{CL}$	0.0 µs

The number of cycles in the above table is the minimum value. The maximum value is the number of cycles in the above table plus $1/F_{CL}$.

Note:

Do not modify these bits during subclock oscillation stabilization wait time. Modify them when the subclock oscillation stabilization bit in the system clock control register 2 (SYCC2:SRDY) has been set to "1". These bits can be modified when the subclock is stopped with the subclock oscillation stop bit in the system clock control register 2 (SYCC2:SOSCE) set to "0" in main clock mode, main CR clock mode, main CR PLL clock mode, or sub-CR clock mode.

[bit3:0] MWT[3:0]: Main clock oscillation stabilization wait time select bits

These bits select the main clock oscillation stabilization wait time.

bit3:0	Details		
	No. of cycles	Main clock (F_{CH}) = 4 MHz	
Writing "1111"	2^{14} - 2	(2^{14} - 2)/F_{CH}	About 4.10 ms
Writing "1110"	2^{13} - 2	(2^{13} - 2)/F_{CH}	About 2.05 ms
Writing "1101"	2^{12} - 2	(2^{12} - 2)/F_{CH}	About 1.02 ms
Writing "1100"	2^{11} - 2	(2^{11} - 2)/F_{CH}	About 511.5 µs
Writing "1011"	2^{10}- 2	(2^{10}- 2)/F_{CH}	About 255.5 µs
Writing "1010"	2^{9} - 2	(2^{9} - 2)/F_{CH}	About 127.5 µs
Writing "1001"	2^{8} - 2	(2^{8} - 2)/F_{CH}	About 63.5 µs
Writing "1000"	2^{7} - 2	(2^{7} - 2)/F_{CH}	About 31.5 µs
Writing "0111"	2^{6} - 2	(2^{6} - 2)/F_{CH}	About 15.5 µs
Writing "0110"	2^{5} - 2	(2^{5} - 2)/F_{CH}	About 7.5 µs
Writing "0101"	2^{4} - 2	(2^{4} - 2)/F_{CH}	About 3.5 µs
Writing "0100"	2^{3} - 2	(2^{3} - 2)/F_{CH}	About 1.5 µs
Writing "0011"	2^{2} - 2	(2^{2} - 2)/F_{CH}	About 0.5 µs
Writing "0010"	2^{1} - 2	(2^{1} - 2)/F_{CH}	0.0 µs
Writing "0001"	2^{1} - 2	(2^{1} - 2)/F_{CH}	0.0 µs
Writing "0000"	2^{1} - 2	(2^{1} - 2)/F_{CH}	0.0 µs

The number of cycles in the above table is the minimum value. The maximum value is the number of cycles in the above table plus 1/F_{CH}.

Note:

Do not modify these bits during main clock oscillation stabilization wait time. Modify them when the main clock oscillation stabilization bit in the system clock control register 2 (SYCC2:MRDY) has been set to "1". These bits can be modified when the main clock is stopped with the main clock oscillation stop bit in the system clock control register 2 (SYCC2:MOSCE) set to "0" in main CR clock mode, main CR PLL clock mode, subclock mode, or sub-CR clock mode.

3.3.4 Standby Control Register (STBC)

The standby control register (STBC) controls transition from the RUN state to sleep mode, stop mode, time-base timer mode, or watch mode, sets the pin state in stop mode, time-base timer mode, and watch mode, and controls the generation of software resets.

Register Configuration

bit	7	6	5	4	3	2	1	0
Field	STP	SLP	SPL	SRST	TMD	—	—	—
Attribute	W	W	R/W	W	W	—	—	—
Initial value	0	0	0	0	0	0	0	0

Register Functions

[bit7] STP: Stop bit

This bit sets the transition to stop mode.

The read value of this bit is always "0".

bit7	Details
Writing "0"	Has no effect on operation.
Writing "1"	Causes the device to transit to stop mode.

Note:

After an interrupt request is generated, writing "1" to this bit is ignored. For details, see 3.5.1 Notes on Using Standby Mode.

[bit6] SLP: Sleep bit

This bit sets the transition to sleep mode.

The read value of this bit is always "0".

bit6	Details
Writing "0"	Has no effect on operation.
Writing "1"	Causes the device to transit to sleep mode.

Note:

After an interrupt request is generated, writing "1" to this bit is ignored. For details, see 3.5.1 Notes on Using Standby Mode.

[bit5] SPL: Pin state setting bit

This bit sets the states of external pins in stop mode, time-base timer mode, and watch mode.

bit5	Details
Writing "0"	The state (level) of an external pin in stop mode, time-base timer mode and watch mode is kept.
Writing "1"	An external pin becomes high impedance in stop mode, time-base timer mode and watch mode. (A pin for which connection to a pull-up resistor has been selected in the pull-up register is pulled up.)

[bit4] SRST: Software reset bit

This bit sets the software reset.

The read value of this bit is always "0".

bit4	Details
Writing "0"	Has no effect on operation.
Writing "1"	Generates a 3-machine clock reset signal.

[bit3] TMD: Watch bit

This bit sets transition to time-base timer mode or watch mode.

Writing "1" to this bit in main clock mode, main CR clock mode, or main CR PLL clock mode causes the device to transit to time-base timer mode.

Writing "1" to this bit in subclock mode or sub-CR clock mode causes the device to transit to watch mode.

Writing "0" to this bit has no effect on operation.

The read value of this bit is always "0".

bit3	Details	
	In main clock mode, main CR clock mode or main CR PLL clock mode	In subclock mode or sub-CR clock mode
Writing "0"	Has no effect on operation.	Has no effect on operation.
Writing "1"	Causes the device to transit to time-base timer mode.	Causes the device to transit to watch mode

Note:

After an interrupt request is generated, writing "1" to this bit is ignored. For details, see 3.5.1 Notes on Using Standby Mode.

[bit2:0] Undefined bits

Their read values are always "0". Writing values to these bits has no effect on operation.

Notes:

- Set a standby mode after making sure that the transition to clock mode has been completed by comparing the values of the clock mode monitor bits (SYCC:SCM[2:0]) and clock mode select bits (SYCC:SCS[2:0]) in the system clock control register.
- If two or more of the following bits, stop bit (STP), sleep bit (SLP), software reset bit (SRST) and watch bit (TMD), are set to "1" together, the order of priority for such bits is as follows:

(1) Software reset bit (SRST)

(2) Stop bit (STP)

(3) Watch bit (TMD)

(4) Sleep bit (SLP)

When released from standby mode, the device returns to the normal operating state.

3.3.5 System Clock Control Register 2 (SYCC2)

The system clock control register 2 (SYCC2) indicates the respective stabilization conditions of main clock oscillation, subclock oscillation, main CR clock oscillation and sub-CR clock oscillation, and controls main clock oscillation, subclock oscillation, main CR clock oscillation and sub-CR clock oscillation.

Register Configuration

bit	7	6	5	4	3	2	1	0
Field	SRDY	MRDY	SCRDY	MCRDY	SOSCE	MOSCE	SCRE	MCRE
Attribute	R	R	R	R	R/W	R/W	R/W	R/W
Initial value	X	X	X	X	0	0	1	1

Register Functions

[bit7] SRDY: Subclock oscillation stabilization bit

This bit indicates whether the subclock oscillation has become stable.

This bit is read-only. Writing a value to this bit has no effect on operation.

bit7	Details
Reading "0"	Indicates that the clock controller is in the subclock oscillation stabilization wait state or that the subclock oscillation has stopped.
Reading "1"	Indicates that the subclock oscillation wait time is over.

[bit6] MRDY: Main clock oscillation stabilization bit

This bit indicates whether the main clock oscillation has become stable.

This bit is read-only. Writing a value to this bit has no effect on operation.

bit6	Details
Reading "0"	Indicates that the clock controller is in the main clock oscillation stabilization wait state or that the main clock oscillation has stopped.
Reading "1"	Indicates that the main clock oscillation wait time is over.

[bit5] SCRDY: Sub-CR clock oscillation stabilization bit

This bit indicates whether the sub-CR clock oscillation has become stable.

This bit is read-only. Writing a value to this bit has no effect on operation.

bit5	Details
Reading "0"	Indicates that the clock controller is in the sub-CR clock oscillation stabilization wait state or that the sub-CR clock oscillation has stopped.
Reading "1"	Indicates that the sub-CR clock oscillation wait time is over.

[bit4] MCRDY: Main CR clock oscillation stabilization bit

This bit indicates whether the main CR clock oscillation has become stable.

This bit is read-only. Writing a value to this bit has no effect on operation.

bit4	Details
Reading "0"	Indicates that the clock controller is in the main CR clock oscillation stabilization wait state or that the main CR clock oscillation has stopped.
Reading "1"	Indicates that the main CR clock oscillation wait time is over.

[bit3] SOSCE: Subclock oscillation enable bit

This bit enables or disables the subclock oscillation.

When SCS[2:0] are set to "0b000", this bit is automatically set to "1".

When SCS[2:0] or SCM[2:0] are set to "0b000", writing "0" to this bit has no effect on operation.

bit3	Details
Writing "0"	Disables the subclock oscillation.
Writing "1"	Enables the subclock oscillation.

[bit2] MOSCE: Main clock oscillation enable bit

This bit enables or disables the main clock oscillation.

When SCS[2:0] are set to "0b010", this bit is automatically set to "1".

When SCS[2:0] or SCM[2:0] are set to "0b010", writing "0" to this bit has no effect on operation.

This bit is automatically set to "0" when the clock mode is changed from one mode to another mode other than main clock mode.

When the current clock mode is subclock mode or sub-CR clock mode, writing "1" to this bit has no effect on operation.

bit2	Details
Writing "0"	Disables the main clock oscillation.
Writing "1"	Enables the main clock oscillation.

[bit1] SCRE: Sub-CR clock oscillation enable bit

This bit enables or disables the sub-CR clock oscillation.

When SCS[2:0] are set to "0b100", this bit is automatically set to "1".

When SCS[2:0] or SCM[2:0] are set to "0b100", writing "0" to this bit has no effect on operation.

When SCS[2:0] and SCM[2:0] are not set to "0b100", this bit can be modified independently of other bits.

bit1	Details
Writing "0"	Disables the sub-CR clock oscillation.
Writing "1"	Enables the sub-CR clock oscillation.

[bit0] MCRE: Main CR clock oscillation enable bit

This bit enables or disables the main CR clock oscillation.

When SCS[2:0] are set to "0b110" or "0b111", this bit is automatically set to "1".

When SCS[2:0] or SCM[2:0] are set to "0b110" or "0b111", writing "0" to this bit has no effect on operation.

This bit is automatically set to "0" when the clock mode is changed from one mode to another mode except main CR clock mode or from main CR PLL clock mode.

When the current clock mode is subclock mode or sub-CR clock mode, writing "1" to this bit has no effect on operation.

bit0	Details
Writing "0"	Disables the main CR clock oscillation.
Writing "1"	Enables the main CR clock oscillation.

3.3.6 Standby Control Register 2 (STBC2)

The standby control register 2 (STBC2) controls the deep standby mode.

Register Configuration

bit	7	6	5	4	3	2	1	0
Field	—	—	—	—	—	—	—	DSTBYX
Attribute	—	—	—	—	—	—	—	R/W
Initial value	0	0	0	0	0	0	0	0

Register Functions

[bit7:1] Undefined bits

Their read values are always "0". Writing values to these bits has no effect on operation.

[bit0] DSTBYX: Deep standby mode control bit

This bit makes the device transit to deep standby mode by setting the Flash memory to the low-power state in standby mode.

bit0	Details
Writing "0"	Sets the Flash memory to the low-power state when the device enters standby mode according to the setting of the standby control register (STBC). (deep standby mode)
Writing "1"	Keeps the Flash memory at the normal state when the device enters standby mode according to the setting of the standby control register (STBC). (normal standby mode)

Notes:

Waking up the device from deep standby mode and waking up the device from the normal standby mode have the following difference.

	Maximum time required to wake up the device from deep standby mode (SCLK: source clock, MCLK: machine clock)		
In main clock mode, main CR clock mode, or main CR PLL clock mode	(10 SCLK + 150 µs + 6 MCLK)	+	time required to wake up the device from normal standby mode
In subclock mode or sub-CR clock mode	(2 SCLK + 150 µs + 6 MCLK)	+	time required to wake up the device from normal standby mode

- Refer to "Electrical Characteristics" in the device data sheet for the difference between the deep standby mode and the normal standby mode in power consumption.
- Do not make the device transit to deep standby mode when a Flash command sequence (except read/reset) has been invoked.

3.4 Clock Modes

There are five clock modes: main clock mode, subclock mode, main CR clock mode, main CR PLL clock mode, and sub-CR clock mode. The clock mode switches according to the settings in the system clock control register (SYCC).

3.4.1 Operations in Main Clock Mode

In main clock mode, the main clock is used as the machine clock for the CPU and peripheral functions.

The time-base timer operates using the main clock.

The watch prescaler operates using the subclock or the sub-CR clock.

While the device is operating in main clock mode, it can be set to transit to one of the following standby mode: sleep mode, stop mode, or time-base timer mode.

After a reset, the device always enters main CR clock mode regardless of the clock mode used before that reset.

3.4.2 Operations in Subclock Mode

In subclock mode, main clock oscillation is stopped* and the subclock is used as the machine clock for the CPU and peripheral functions. In this mode, the time-base timer stops as it requires the main clock for operation.

While the device is operating in subclock mode, it can be set to transit to one of the following standby mode: sleep mode, stop mode, or watch mode.

3.4.3 Operations in Main CR Clock Mode or Main CR PLL Clock Mode

In main CR clock mode or main CR PLL clock mode, the main CR clock or the main CR PLL clock is used as the machine clock for the CPU and peripheral functions. The time-base timer and the watchdog timer operate using the main CR clock or the main CR PLL clock.

The watch prescaler operates using the subclock or the sub-CR clock.

While the device is operating in main CR clock mode or the main CR PLL clock mode, it can be set to transit to one of the following standby mode: sleep mode, stop mode, or time-base timer mode.

3.4.4 Operations in Sub-CR Clock Mode

In sub-CR clock mode, main clock oscillation is stopped* and the sub-CR clock is used as the machine clock for the CPU and peripheral functions. In this mode, the time-base timer stops as it requires the main clock for operation. The watch prescaler operates using the sub-CR clock.

While the device is operating in sub-CR clock mode, it can be set to transit to one of the following standby mode: sleep mode, stop mode, or watch mode.

*: The oscillation of the main clock, main CR clock, or main CR PLL clock is automatically disabled (writing "0" to SYCC2:MOSCE, SYCC2:MCRE or PLLC:MPEN respectively) when the clock mode transits from main clock mode, main CR clock mode or main CR PLL clock mode to subclock mode or sub-CR clock mode. In subclock mode or sub-CR clock mode, writing "1" to SYCC2:MOSCE, SYCC2:MCRE or PLLC:MPEN cannot enable the main clock, the main CR clock, or the main CR PLL clock respectively.

3.4.5 Clock Mode State Transition Diagram

There are five clock modes: main clock mode, subclock mode, main CR clock mode, main CR PLL clock mode and sub-CR clock mode. The device can switch between these modes according to the settings in the system clock control register (SYCC).

Figure 3-3. Clock Mode State Transition Diagram

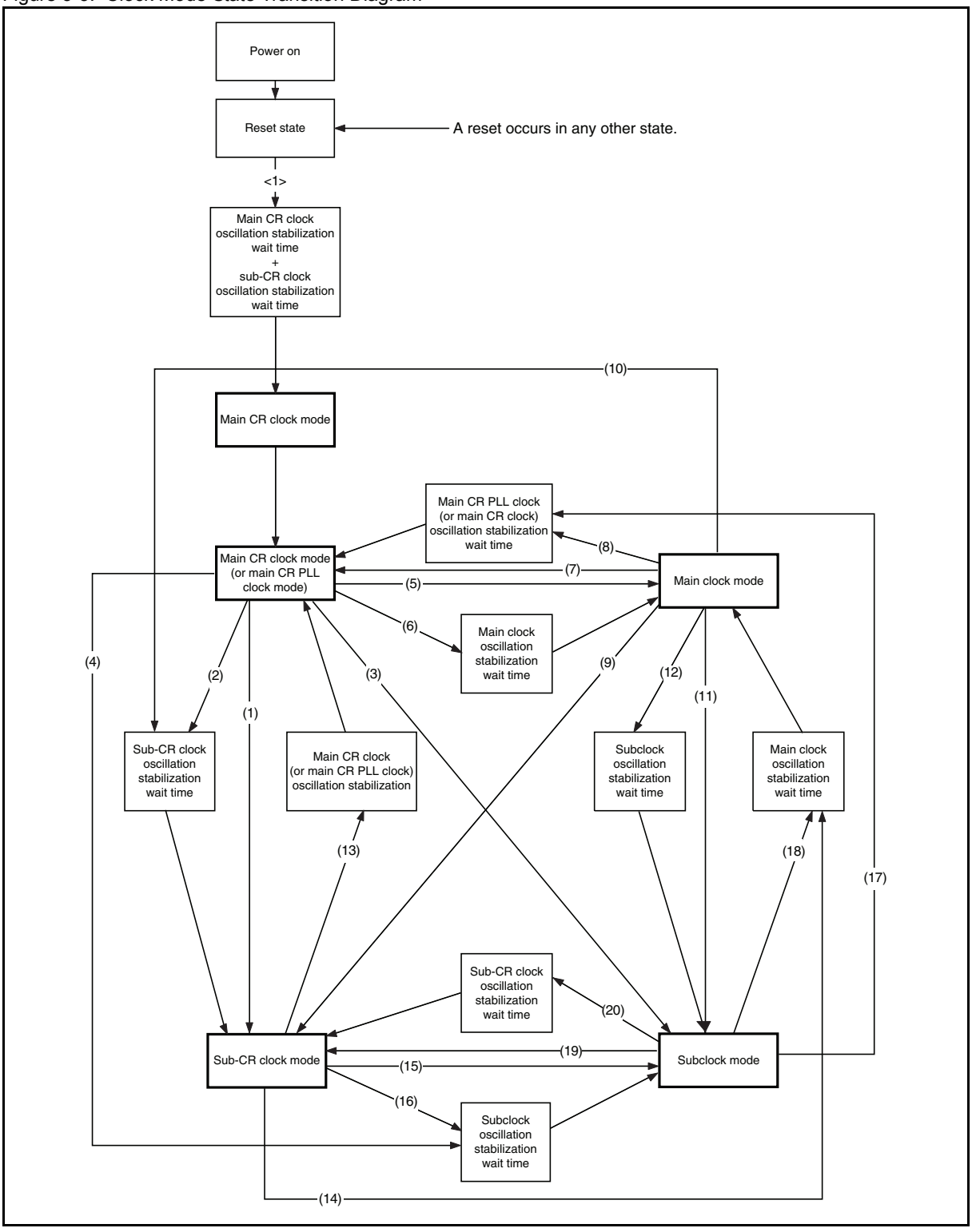

Table 3-9. Clock Mode State Transition Table (Sheet 1 of 2)

	Current State	Next State	Description
<1>	Reset state	Main CR clock	After a reset, the device waits for the main CR clock oscillation stabilization wait time and the sub-CR clock oscillation stabilization wait time to elapse and transits to main CR clock mode. Even if that reset is a watchdog reset, software reset or external reset caused in any clock mode, the device waits for the sub-CR clock oscillation stabilization wait time and the main CR clock oscillation stabilization wait time to elapse.
(1)	Main CR clock/ Main CR PLL clock	Sub-CR clock	The device transits to sub-CR clock mode when the clock mode select bits in the system clock control register (SYCC:SCS[2:0]) are set to "0b100". However, when the sub-CR has been stopped according to the setting of the sub-CR clock oscillation enable bit in the system clock control register 2 (SYCC2:SCRE), the device waits for the sub-CR clock oscillation stabilization wait time to elapse before transiting to sub-CR clock mode. In other words, when the sub-CR clock oscillation is enabled in advance, and the sub-CR clock oscillation stabilization bit in the system clock control register 2 (SYCC2:SCRDY) is "1", the device transits to sub-CR clock mode immediately after the clock mode select bits (SYCC:SCS[2:0]) are set to "0b100".
(2)			
(3)		Subclock	When the clock mode select bits in the system clock control register (SYCC:SCS[2:0]) are set to "0b000", the device transits to subclock mode after waiting for the subclock oscillation stabilization wait time. When the subclock oscillation is enabled by the setting of the subclock oscillation enable bit in the system clock control register 2 (SYCC2:SOSCE), and the subclock oscillation stabilization bit in the system clock control register 2 (SYCC2:SRDY) is "1", the device transits to subclock mode immediately after the clock mode select bits (SYCC:SCS[2:0]) are set to "0b000".
(4)			
(5)		Main clock	When the clock mode select bits in the system clock control register (SYCC:SCS[2:0]) are set to "0b010", the device transits to main clock mode after waiting for the main clock oscillation stabilization wait time. When the main clock oscillation is enabled by the setting of the main clock oscillation enable bit in the system clock control register 2 (SYCC2:MOSCE), and the main clock oscillation stabilization bit in the system clock control register 2 (SYCC2:MRDY) is "1", the device transits to main clock mode immediately after the clock mode select bits (SYCC:SCS[2:0]) are set to "0b010".
(6)			
(7)	Main clock	Main CR clock/ Main CR PLL clock	When the clock mode select bits in the system clock control register (SYCC:SCS[2:0]) are set to "0b110", the device transits to main CR clock mode after waiting for the main CR clock oscillation stabilization wait time. When the main CR clock oscillation is enabled by the setting of the main CR clock oscillation enable bit in the system clock control register 2 (SYCC2:MCRE), and the main CR clock oscillation stabilization bit in the system clock control register 2 (SYCC2:MCRDY) is "1", the device transits to main CR clock mode immediately after the clock mode select bits (SYCC:SCS[2:0]) are set to "0b110". When the clock mode select bits in the system clock control register (SYCC:SCS[2:0]) are set to "0b111", the device transits to main CR PLL clock mode after waiting for the main CR PLL clock oscillation stabilization wait time. When the main CR PLL clock oscillation is enabled by the setting of the main CR PLL clock enable bit in the PLL control register (PLLC:MPEN), and the main CR PLL clock oscillation stabilization bit in the PLL control register (PLLC:MPRDY) is "1", the device transits to main CR PLL clock mode immediately after the clock mode select bits (SYCC:SCS[2:0]) are set to "0b111".
(8)			
(9)		Sub-CR clock	Same as (1) and (2)
(10)			
(11)		Subclock	Same as (3) and (4)
(12)			

Table 3-9. Clock Mode State Transition Table (Sheet 2 of 2)

	Current State	Next State	Description
(13)	Sub-CR clock	Main CR clock/ Main CR PLL clock	When the clock mode select bits in the system clock control register (SYCC:SCS[2:0]) are set to "0b110", the device transits to main CR clock mode after waiting for the main CR clock oscillation stabilization wait time. When the clock mode select bits in the system clock control register (SYCC:SCS[2:0]) are set to "0b111", the device transits to main CR PLL clock mode after waiting for the main CR PLL clock oscillation stabilization wait time.
(14)		Main clock	When the clock mode select bits in the system clock control register (SYCC:SCS[2:0]) are set to "0b010", the device transits to main clock mode after waiting for the main clock oscillation stabilization wait time.
(15)		Subclock	Same as (3) and (4)
(16)			
(17)	Subclock	Main CR clock/ Main CR PLL clock	Same as (13)
(18)		Main clock	Same as (14)
(19)		Sub-CR clock	Same as (1) and (2)
(20)			

3.5 Operations in Low Power Consumption Mode (Standby Mode)

There are four standby modes: sleep mode, stop mode, time-base timer mode and watch mode.

Overview of Transiting to and Returning from Standby Mode

There are four standby modes: sleep mode, stop mode, time-base timer mode, and watch mode. The device transits to standby mode according to the settings in the standby control register (STBC).

The device is released from standby mode by an interrupt or a reset. Before transiting to normal operation, the device may wait for the oscillation stabilization wait time to elapse if necessary.

When the clock mode returns from standby mode due to a reset, the device returns to main CR clock mode. When the clock mode returns from standby mode due to an interrupt, the device returns to the previous clock mode before transiting to standby mode.

Pin States in Standby Mode

The pin state setting bit (STBC:SPL) of the standby control register can be used to keep the preceding state of an I/O port or a peripheral function pin before its transition to stop mode, time-base timer mode or watch mode, and to set an I/O port or a peripheral function pin to high impedance in stop mode, time-base timer mode or watch mode.

Refer to the device data sheet for the states of all pins in standby mode.

3.5.1 Notes on Using Standby Mode

Even if the standby control register (STBC) sets standby mode, transition to standby mode does not occur when an interrupt request has been generated from a peripheral function. When the device returns from standby mode to the normal operating state in response to an interrupt, the operation that follows varies depending on whether the interrupt request is accepted or not.

3.5.1.1 Insert at least three NOP instructions immediately after a standby mode setting instruction.

The device requires four machine clock cycles before entering standby mode after it is set in the standby control register. During that period, the CPU executes the program. To avoid program execution during this transition to standby mode, insert at least three NOP instructions.

The device still runs normally even if instructions other than NOP instructions are inserted after the instruction that sets the device to transit to standby mode. On this occasion, the following two events may occur. Firstly, an instruction that should be executed after the standby mode is released may be executed before the device transits to standby mode. Secondly, the device may transit to standby mode while an instruction is being executed, and the execution of that same instruction is resumed after the device is released from standby mode (increasing the number of instruction execution cycles).

3.5.1.2 Check that clock mode transition has been completed before setting the standby mode.

Before setting the standby mode, ensure that clock-mode transition has been completed by comparing the values of the clock mode monitor bits (SYCC:SCM[2:0]) and clock mode select bits (SYCC:SCS[2:0]) in the system clock control register.

3.5.1.3 An interrupt request may suppress the transition to standby mode.

When the standby mode is set with an interrupt request whose interrupt level is higher than "0b11" having been issued, the device ignores the value written to the standby control register and continues executing instructions without transiting to the standby mode set. Even after the interrupt of that interrupt request is processed, the device does not transit to the standby mode set.

The same operations are executed when interrupts are disabled by the interrupt enable flag (CCR:I) and the interrupt level bits (CCR:IL[1:0]) of the condition code register of the CPU.

3.5.1.4 The standby mode is also released when the CPU rejects interrupts.

When an interrupt request whose interrupt level is higher than "0b11" is issued in standby mode, the device is released from standby mode, regardless of the settings of the interrupt enable flag (CCR:I) and the interrupt level bits (CCR:IL[1:0]) of the condition code register (CCR) of the CPU.

After being released from standby mode, the device processes interrupts if interrupts are to be accepted according to the settings of the condition code register (CCR) of the CPU. If interrupts are not to be accepted according to the settings of CCR, the device resumes instruction execution from the instruction following the one executed before the device transits to standby mode.

3.5.1.5 In every standby mode, the following two operating modes can be selected.

1. Deep standby mode (STBC2:DSTBYX = 0)

In standby mode, the power consumption in deep standby mode is lower than that in normal standby mode. However, since the device has to wait for the Flash recovery wait time to elapse before being woken up from deep standby mode by a reset or an interrupt source, it takes more time to wake up the device from deep standby mode than from normal standby mode.

2. Normal standby mode (STBC2:DSTBYX = 1)

In standby mode, the power consumption in normal standby mode is higher than that in deep standby mode. However, since the device does not have to wait for the Flash recovery wait time to elapse before being woken up from normal standby mode by a reset or an interrupt source, it takes lesser time to wake up the device from deep standby mode than from normal standby mode.

For details of the Flash recovery wait time, see Table 3-11. For the difference between deep standby mode and normal standby mode in power consumption, refer to "Electrical Characteristics" in the device data sheet.

3.5.1.6 *Standby Mode State Transition Diagram (with Deep Standby Mode Disabled)*

Figure 3-4 shows a standby mode state transition diagram (with deep standby mode disabled).

Figure 3-4. Standby Mode State Transition Diagram (with Deep Standby Mode Disabled)

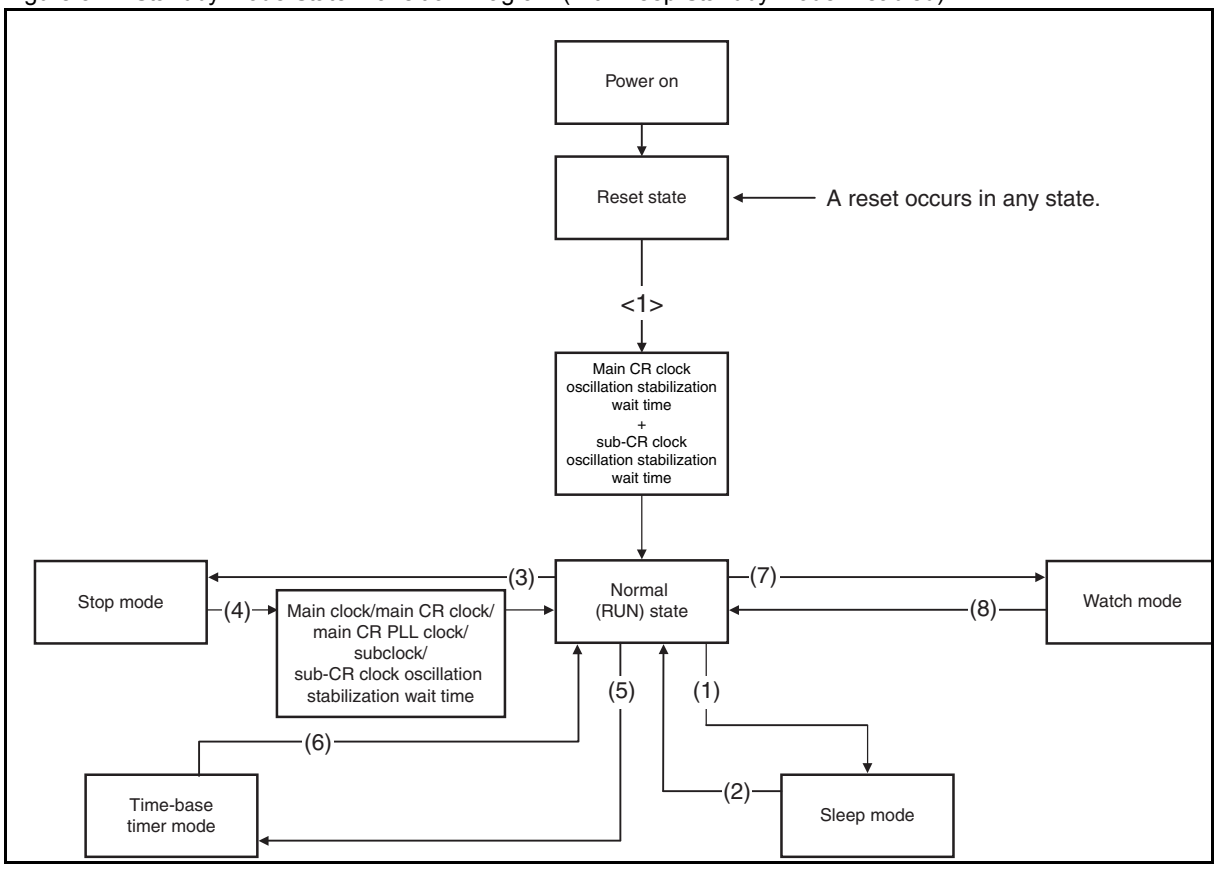

Table 3-10. Table of State Transition with Deep Standby Mode Disabled (Transition to and from Standby Mode)

	State transition	Description
<1>	Normal operation after reset state	After a reset, the device transits to main CR clock mode. If the reset that has occurred is a power-on reset, a watchdog reset, a software reset, or an external reset, the device always waits for the main CR clock oscillation stabilization wait time and the sub-CR clock oscillation stabilization wait time to elapse.
(1)	Sleep mode	The device transits to sleep mode when "1" is written to the sleep bit in the standby control register (STBC:SLP).
(2)		The device returns to the RUN state in response to an interrupt from a peripheral function.
(3)	Stop mode	The device transits to stop mode when "1" is written to the stop bit in the standby control register (STBC:STP).
(4)		In response to an external interrupt, after waiting for the elapse of the oscillation stabilization wait time required according to the current clock mode, the device returns to the RUN state.
(5)	Time-base timer mode	The device transits to time-base timer mode when "1" is written to the watch bit in the standby control register (STBC:TMD) in main clock mode, main CR clock mode, or main CR PLL clock mode.
(6)		The device returns to the RUN state in response to an interrupt from a peripheral function.
(7)	Watch mode	The device transits to watch mode when "1" is written to the watch bit in the standby control register (STBC:TMD) in subclock mode or sub-CR clock mode.
(8)		The device returns to the RUN state in response to an interrupt from a peripheral function.

3.5.1.7 *Standby Mode State Transition Diagram (with Deep Standby Mode Enabled)*

Figure 3-5 shows a standby mode state transition diagram (with deep standby mode enabled).

Figure 3-5. Standby Mode State Transition Diagram (with Deep Standby Mode Enabled)

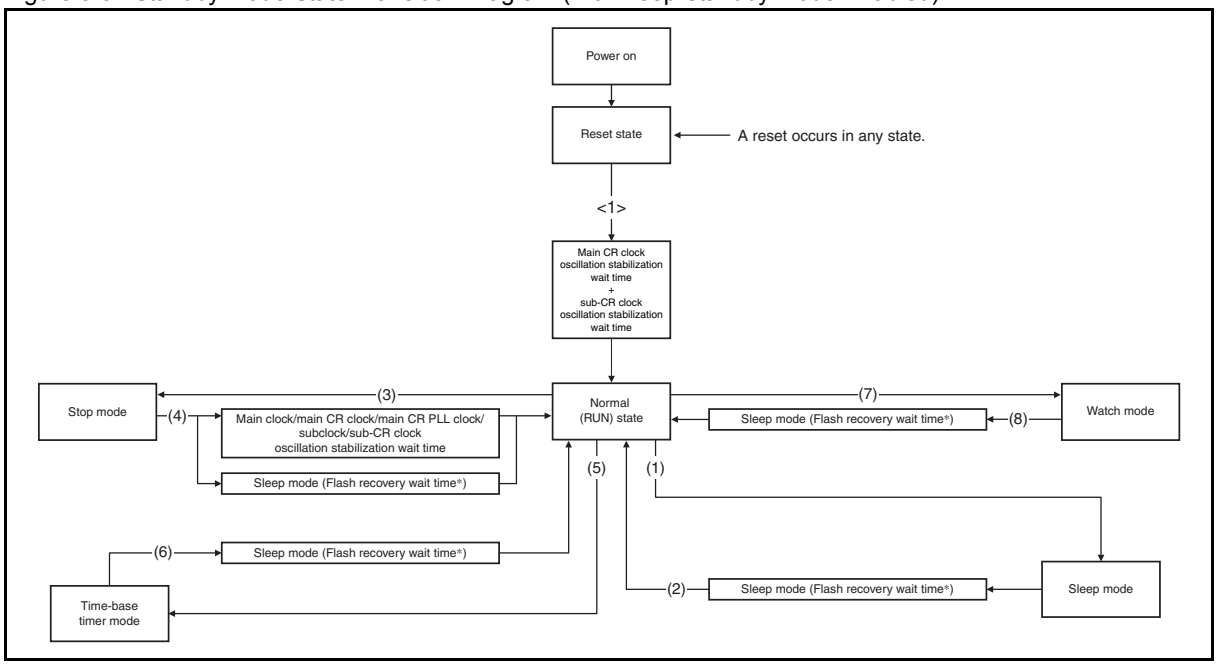

*: Flash memory recovery wait time (SCLK: source clock, MCLK: machine clock)

- In main clock mode, main CR clock mode, or main CR PLL clock mode
  Maximum: 10 SCLK + 150 µs + 6 MCLK
- In subclock mode or sub-CR clock mode
  Maximum: 2 SCLK + 150 µs + 6 MCLK

Table 3-11. Table of State Transition with Deep Standby Mode Enabled (Transition to and from Standby Mode)

	State transition	Description
<1>	Normal operation after reset state	After a reset, the device transits to main CR clock mode. If the reset that has occurred is a power-on reset, a watchdog reset, a software reset, or an external reset, the device always wait for the main CR clock oscillation stabilization wait time and the sub-CR clock oscillation stabilization wait time to elapse.
(1)	Sleep mode	The device transits to sleep mode when "1" is written to the sleep bit in the standby control register (STBC:SLP).
(2)		In response to an interrupt from a peripheral function, after the Flash recovery wait time elapses, the device returns to the RUN state. During the Flash recovery wait time, the device transits to sleep mode. (The CPU stops its operation; the peripheral function resumes its operation.) However, if a program is being executed on the RAM, no Flash recovery wait time occurs.
(3)	Stop mode	The device transits to stop mode when "1" is written to the stop bit in the standby control register (STBC:STP).
(4)		In response to an external interrupt, after the oscillation stabilization wait time required according to the current clock mode and the Flash recovery wait time elapse, the device returns to the RUN state. When the oscillation stabilization wait time is shorter than the Flash recovery wait time, after the oscillation stabilization wait time elapses, the device transits to sleep mode and remains in sleep mode until the Flash recovery wait time elapses. When the oscillation stabilization wait time is longer than the Flash recovery wait time, after the oscillation stabilization wait time elapses, the device returns to the RUN state. However, if a program is being executed on the RAM, no Flash recovery wait time occurs.
(5)	Time-base timer mode	The device transits to time-base timer mode when "1" is written to the watch bit in the standby control register (STBC:TMD) in main clock mode or main CR clock mode.
(6)		In response to an interrupt from a peripheral function, after the Flash recovery wait time elapses, the device returns to the RUN state. During the Flash recovery wait time, the device transits to sleep mode. (The CPU stops its operation; the peripheral function resumes its operation.) However, if a program is being executed on the RAM, no Flash recovery wait time occurs.
(7)	Watch mode	The device transits to watch mode when "1" is written to the watch bit in the standby control register (STBC:TMD) in subclock mode or sub-CR clock mode.
(8)		In response to an interrupt from a peripheral function, after the Flash recovery wait time elapses, the device returns to the RUN state. During the Flash recovery wait time, the device transits to sleep mode. (The CPU stops its operation; the peripheral function resumes its operation.) However, if a program is being executed on the RAM, no Flash recovery wait time occurs.

3.5.2 Sleep Mode

In sleep mode, the operations of the CPU and watchdog timer are stopped.

3.5.2.1 Operations in Sleep Mode

In sleep mode, the CPU and the operating clock for the watchdog timer are stopped. The CPU retains the contents of registers and RAM existing at the point immediately before the device transits to sleep mode and stops; however, all peripheral functions except the watchdog timer continue their operations.

In the case of hardware watchdog timer, if it is enabled in standby mode by the non-volatile register function, in sleep mode, the sub-CR clock does not stop and the hardware watchdog timer continues its operation. For details, see Chapter 27.Non-Volatile Register (NVR) Interface.

- Transition to sleep mode

Writing "1" to the sleep bit in the standby control register (STBC:SLP) causes the device to enter sleep mode.

- Release from sleep mode

A reset or an interrupt from a peripheral function releases the device from sleep mode.

With the deep standby mode control bit (STBC2:DSTBYX) set to "0", even after a reset occurs or an interrupt is generated by a peripheral function, the device continues operating in sleep mode until the Flash recovery wait time elapses.

However, if a program is being executed on the RAM, no Flash recovery wait time occurs.

3.5.3 Stop Mode

In stop mode, the main clock, the main CR clock, the main CR PLL clock and the subclock are stopped.

3.5.3.1 Operations in Stop Mode

In stop mode, the main clock, the main CR clock, the main CR PLL clock and the subclock are stopped. In this mode, while retaining the contents of registers and RAM existing at the point immediately before the device transits to stop mode, the device stops all functions except external interrupt and low-voltage detection reset.

As for hardware watchdog timer, if it is enabled in standby mode by the non-volatile register function, in stop mode, the sub-CR clock does not stop and the hardware watchdog timer continues its operation. For details, see Chapter 27.Non-Volatile Register (NVR) Interface

Transition to stop mode

Writing "1" to the stop bit in the standby control register (STBC:STP) causes the device to transit to stop mode. At that point, if the pin state setting bit in the standby control register (STBC:SPL) is "0", the states of the external pins are kept; if the SPL bit is "1", the states of the external pins become high impedance (a pin is pulled up if the pull-up resistor connection for that pin is selected in the pull-up register).

Release from stop mode

The device is released from stop mode by a reset or an external interrupt. In any clock mode, if the hardware watchdog timer is enabled in standby mode by the non-volatile register function, the sub-CR clock does not stop, and the watchdog timer and the watch prescaler operate in stop mode. The device can also be released from stop mode by an interrupt from the watch prescaler. For details, see Chapter 27.Non-Volatile Register (NVR) Interface.

With the deep standby mode control bit (STBC2:DSTBYX) set to "0", after a reset occurs or an interrupt is generated by a peripheral function, the device executes different operations, depending on the relation between the oscillation stabilization wait time and the Flash recovery wait time as explained below.

- When the oscillation stabilization wait time is shorter than the Flash recovery wait time
  After the oscillation stabilization wait time elapses, the device transits to sleep mode and remains in sleep mode until the Flash recovery wait time elapses.
- When the oscillation stabilization wait time is longer than the Flash recovery wait time
  After the oscillation stabilization wait time elapses, the device returns to the RUN state.

However, if a program is being executed on the RAM, no Flash recovery wait time occurs.

Note:

If the device is released from stop mode by an interrupt, a peripheral function having transited to stop mode during operation resumes operating from the point at which it transited to stop mode. Therefore, some settings of that peripheral function, such as the initial interval time of the interval timer, become undefined. Initialize that peripheral function if necessary after releasing the device from stop mode.

3.5.4 Time-base Timer Mode

In time-base timer mode, only the main clock oscillator, the subclock oscillator, the time-base timer, and the watch prescaler operate. The CPU and the operating clock for peripheral functions are stopped in this mode.

3.5.4.1 Operations in Time-base Timer Mode

The time-base timer mode is a mode in which main clock supply is stopped except the clock supply to the time-base timer. In this mode, while retaining the contents of registers and RAM existing at the point immediately before the device transits to time-base timer mode, the device stops all functions except the time-base timer, external interrupt and low-voltage detection reset.

Subclock oscillation and sub-CR clock oscillation can be enabled or disabled by the subclock oscillation enable bit and the sub-CR clock oscillation enable bit in the system clock control register 2 (SYCC2:SOSCE, SCRE) respectively. If the subclock oscillates, the watch prescaler continues its operation.

In the case of hardware watchdog timer, if it is enabled in standby mode by the non-volatile register function, in time-base timer mode, the sub-CR clock does not stop and the hardware watchdog timer continues its operation. For details, see Chapter 27.Non-Volatile Register (NVR) Interface.

- Transition to time-base timer mode

If the clock mode monitor bits in the system clock control register (SYCC:SCM[2:0]) are "0b010", "0b110", or "0b111", writing "1" to the watch bit in the standby control register (STBC:TMD) causes the device to transit to time-base timer mode.

The device can transit to time-base timer mode only when the clock mode is main clock mode, main CR clock mode or main CR PLL clock mode.

After the device transits to time-base timer mode, if the pin state setting bit in the standby control register (STBC:SPL) is "0", the states of the external pins are kept; if the SPL bit is "1", the states of the external pins become high impedance (a pin is pulled up if the pull-up resistor connection for that pin is selected in the pull-up register).

- Release from time-base timer mode

The device is released from time-base timer mode by a reset, a time-base timer interrupt, or an external interrupt.

Subclock oscillation and sub-CR clock oscillation can be enabled or disabled by setting the subclock oscillation enable bit (SOSCE) and the sub-CR clock oscillation enable bit (SCRE) in the system clock control register 2 (SYCC2). When the subclock oscillates, the device can be released from time-base timer mode by an interrupt from the watch prescaler.

With the deep standby mode control bit (STBC2:DSTBYX) set to "0", even after a reset occurs or an interrupt is generated by a peripheral function, the device continues operating in sleep mode until the Flash recovery wait time elapses.

However, if a program is being executed on the RAM, no Flash recovery wait time occurs.

Note:

If the device is released from time-base timer mode by an interrupt, a peripheral function having transited to time-base timer mode during operation resumes operating from the point at which it transited to time-base timer mode. Therefore, some settings of that peripheral function, such as the initial interval time of the interval timer, become undefined. Initialize that peripheral function if necessary after releasing the device from time-base timer mode.

3.5.5 Watch Mode

In watch mode, only the subclock, the sub-CR clock and the watch prescaler operate. The CPU and the operating clock for peripheral functions are stopped in this mode.

3.5.5.1 Operations in Watch Mode

In watch mode, while retaining the contents of registers and RAM existing at the point immediately before the device transits to watch mode, the device stops all functions except the watch prescaler, external interrupt and low-voltage detection reset.

In the case of hardware watchdog timer, if it is enabled in standby mode by the non-volatile register function, in watch mode, the sub-CR clock does not stop and the hardware watchdog timer continues its operation. For details, see Chapter 27.Non-Volatile Register (NVR) Interface.

- Transition to watch mode

If the clock mode monitor bits in the system clock control register (SYCC:SCM[2:0]) are "0b000" or "0b100", writing "1" to the watch bit in the standby control register (STBC:TMD) causes the device to transit to watch mode.

The device can transit to watch mode only when the clock mode is subclock mode or sub-CR clock mode.

After the device transits to watch mode, if the pin state setting bit in the standby control register (STBC:SPL) is "0", the states of the external pins are kept; if the SPL bit is "1", the states of the external pins become high impedance (a pin is pulled up if the pull-up resistor connection for that pin is selected in the pull-up register).

- Release from watch mode

The device is released from watch mode by a reset, a watch interrupt, or an external interrupt.

With the deep standby mode control bit (STBC2:DSTBYX) set to "0", even after a reset occurs or an interrupt is generated by a peripheral function, the device continues operating sleep mode until the Flash recovery wait time elapses.

However, if a program is being executed on the RAM, no Flash recovery wait time occurs.

Note:

If the device is released from watch mode by an interrupt, a peripheral function having transited to watch mode during operation resumes operating from the point at which it transited to watch mode. Therefore, some settings of that peripheral function, such as the initial interval time of the interval timer, become undefined. Initialize that peripheral function if necessary after releasing the device from watch mode.

3.6 Clock Oscillator Circuit

The clock oscillator circuit generates an internal clock with an oscillator connected to the clock oscillation pin or by inputting a clock signal to the clock oscillation pin.

3.6.1 Clock Oscillator Circuit

- Using crystal oscillators and ceramic oscillators

Connect crystal oscillators or ceramic oscillators as shown in Figure 3-6.

Figure 3-6. Sample Connection of Crystal Oscillators and Ceramic Oscillators

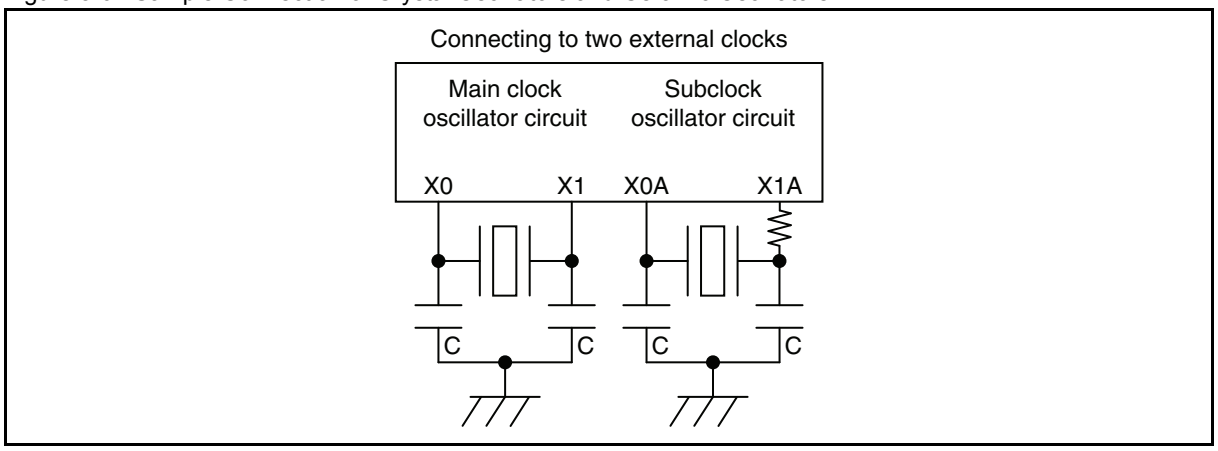

- Using external clock

As shown in Figure 3-7, connect the external clock to the X0 pin while leaving the X1 pin unconnected or supplying inverted clock of the X0 pin to the X1 pin (refer to the device data sheet). To supply clock signals to the subclock from an external clock, connect that external clock to the X0A pin while leaving the X1A pin unconnected.

Figure 3-7. Sample Connection of External Clocks

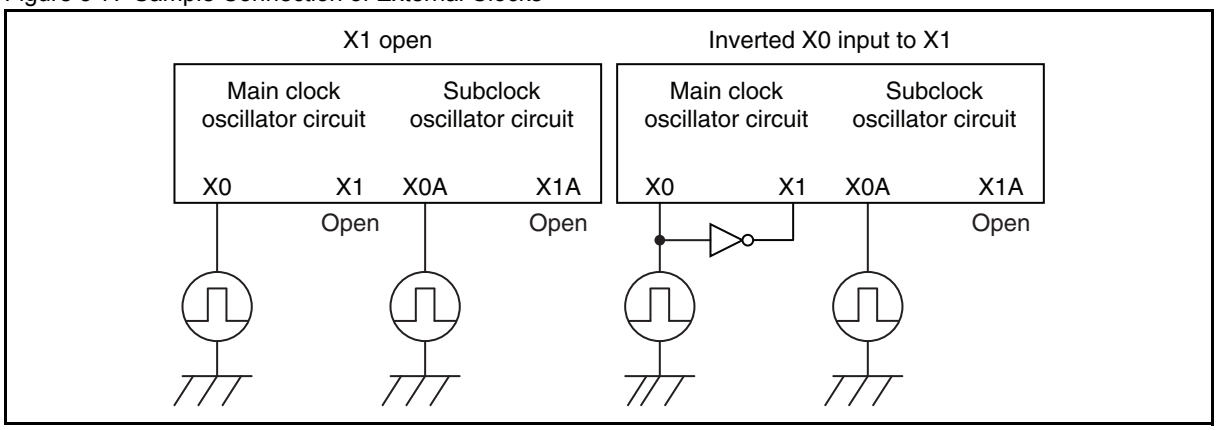

3.7 Overview of Prescaler

The prescaler generates the count clock source to be supplied to various peripheral functions from the machine clock (MCLK) and the count clock output from the time-base timer.

3.7.1 Prescaler

The prescaler generates the count clock source to be supplied to various peripheral functions from the machine clock (MCLK) with which the CPU operates and from the count clock ($F_{CH}/2^7$, $F_{CH}/2^8$, $F_{CRH}/2^6$, $F_{CRH}/2^7$, $F_{MCRPLL}/2^6$, or $F_{MCRPLL}/2^7$) output from the time-base timer. The count clock source is a clock whose frequency is divided by the prescaler or a buffered clock. The peripheral functions listed below use the clock whose frequency is divided by the prescaler as the count clock source.

The prescaler has no control register and always operates with the machine clock (MCLK) and the count clock ($F_{CH}/2^7$, $F_{CH}/2^8$, $F_{CRH}/2^6$, $F_{CRH}/2^7$, $F_{MCRPLL}/2^6$, or $F_{MCRPLL}/2^7$) of the time-base timer.

- 8/16-bit composite timer
- 8/10-bit A/D converter
- 8/16-bit PPG
- 16-bit PPG timer
- 16-bit reload timer
- UART/SIO dedicated baud rate generator

3.8 Configuration of Prescaler

Figure 3-8 is the block diagram of the prescaler.

3.8.1 Block Diagram of Prescaler

Figure 3-8. Block Diagram of Prescaler

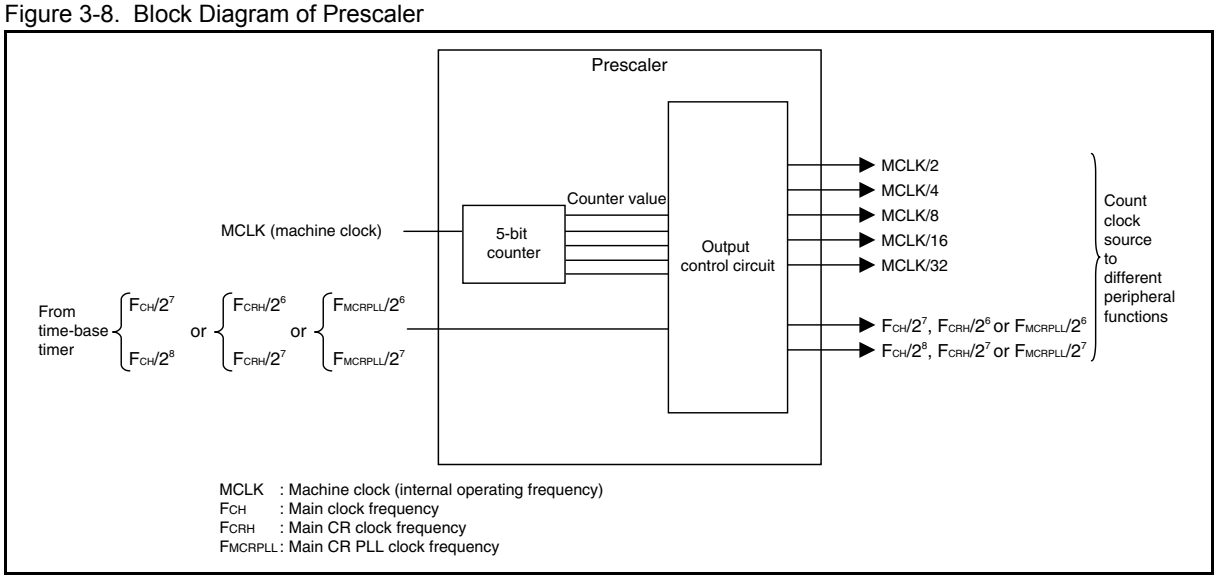

- 5-bit counter
  This counter counts the machine clock (MCLK) and outputs the count value to the output control circuit.
- Output control circuit
  Based on the 5-bit counter value, this circuit supplies clocks generated by dividing the machine clock (MCLK) by 2, 4, 8, 16, or 32 to individual peripheral functions. The circuit also buffers the clock from the time-base timer ($F_{CH}/2^7$, $F_{CH}/2^8$, $F_{CRH}/2^6$, $F_{CRH}/2^7$, $F_{MCRPLL}/2^6$, or $F_{MCRPLL}/2^7$) and supplies it to peripheral functions.

3.8.2 Input Clock

The prescaler uses the machine clock, or the output clock of the time-base timer as the input clock.

3.8.3 Output Clock

The prescaler supplies clocks to the following peripheral functions:

- 8/16-bit composite timer
- 8/10-bit A/D converter
- 8/16-bit PPG
- 16-bit PPG timer
- 16-bit reload timer
- UART/SIO dedicated baud rate generator

3.9 Operation of Prescaler

The prescaler generates count clock sources to different peripheral functions.

3.9.1 Operation of Prescaler

The prescaler generates count clock sources from a clock whose frequency is generated by dividing the machine clock (MCLK), or from buffered signals from the time-base timer ($F_{CH}/2^7$, $F_{CH}/2^8$, $F_{CRH}/2^6$, $F_{CRH}/2^7$, $F_{MCRPLL}/2^6$, or $F_{MCRPLL}/2^7$), and then supplies them to different peripheral functions. The prescaler keeps operating while the machine clock and the clocks from the time-base timer are being supplied.

Table 3-12, Table 3-13 and Table 3-14 list the count clock sources generated by the prescaler.

Table 3-12. Count Clock Sources Generated by Prescaler (F_{CH})

Count clock source frequency	Frequency (F_{CH} = 20 MHz, MCLK = 10 MHz)	Frequency (F_{CH} = 32 MHz, MCLK = 16 MHz)	Frequency (F_{CH} = 32.5 MHz, MCLK = 16.25 MHz)
MCLK/2	5 MHz	8 MHz	8.125 MHz
MCLK/4	2.5 MHz	4 MHz	4.0625 MHz
MCLK/8	1.25 MHz	2 MHz	2.0313 MHz
MCLK/16	0.625 MHz	1 MHz	1.0156 MHz
MCLK/32	0.3125 MHz	0.5 MHz	0.5078 MHz
$F_{CH}/2^7$	156.25 kHz	250 kHz	253.9 kHz
$F_{CH}/2^8$	78.125 kHz	125 kHz	126.95 kHz

Table 3-13. Count Clock Sources Generated by Prescaler (F_{CRH})

Count clock source frequency	Frequency (F_{CRH} = 4 MHz, MCLK= 4 MHz)
MCLK/2	2 MHz
MCLK/4	1 MHz
MCLK/8	0.5 MHz
MCLK/16	0.25 MHz
MCLK/32	125 kHz
$F_{CRH}/2^6$	62.5 kHz
$F_{CRH}/2^7$	31.25 kHz

Table 3-14. Count Clock Sources Generated by Prescaler (F_{MCRPLL})

Count clock source frequency	Frequency (F_{MCRPLL} = 8 MHz, MCLK = 8 MHz)	Frequency (F_{MCRPLL} = 10 MHz, MCLK = 10 MHz)	Frequency (F_{MCRPLL} = 12 MHz, MCLK = 12 MHz)	Frequency (F_{MCRPLL} = 16 MHz, MCLK = 16 MHz)
MCLK/2	4 MHz	5 MHz	6 MHz	8 MHz
MCLK/4	2 MHz	2.5 MHz	3 MHz	4 MHz
MCLK/8	1 MHz	1.25 MHz	1.5 MHz	2 MHz
MCLK/16	0.5 MHz	0.625 MHz	0.75 MHz	1 MHz
MCLK/32	0.25 MHz	0.3125 MHz	0.375 MHz	0.5 MHz
$F_{MCRPLL}/2^6$	125 kHz	156.25 kHz	187.5 kHz	0.25 MHz
$F_{MCRPLL}/2^7$	62.5 kHz	78.125 kHz	93.75 kHz	125 kHz

3.10 Notes on Using Prescaler

This section provides notes on using the prescaler.

The prescaler operates with the machine clock and the clock generated from the time-base timer, and keeps operating while those clocks are being supplied. Therefore, in the operation immediately after a peripheral function is started, an error of up to one cycle of the clock source captured by that peripheral function will occur, depending on the output value of the prescaler.

Figure 3-9. Clock Capture Error Occurring Immediately after a Peripheral Function Starts

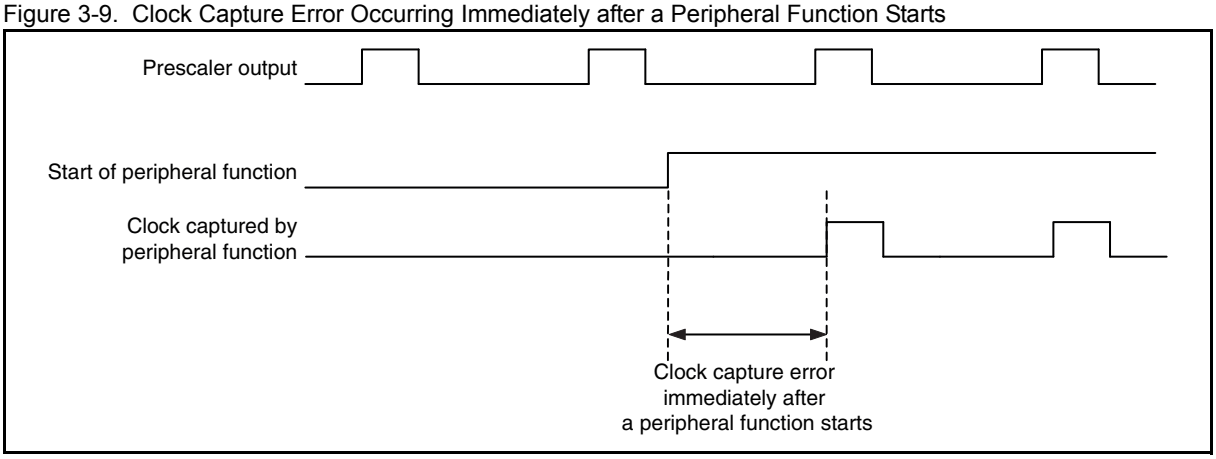

The prescaler count value affects the following peripheral functions:

- 8/16-bit composite timer
- 8/10-bit A/D converter
- 8/16-bit PPG
- 16-bit PPG timer
- 16-bit reload timer
- UART/SIO dedicated baud rate generator

4. Reset

This section describes the reset operation.

4.1 Reset Operation

4.2 Register

4.3 Notes on Using Reset

4.1 Reset Operation

When a reset source occurs, the CPU immediately stops the process being executed and enters the reset release wait state. When the reset is released, the CPU reads mode data and the reset vector from the Flash memory (mode fetch). When the power is switched on or when the device is released from a reset in subclock mode, sub-CR clock mode, or stop mode, the CPU performs mode fetch after the oscillation stabilization wait time has elapsed.

4.1.1 Reset Sources

There are five reset sources for the reset.

Table 4-1. Reset Sources

Reset source	Reset condition
External reset	"L" level is input to the external reset pin.
Software reset	"1" is written to the software reset bit in the standby control register (STBC:SRST).
Watchdog reset	The watchdog timer overflows.
Power-on reset	The power is switched on.
Low-voltage detection reset	The supply voltage falls below the detection voltage.

4.1.1.1 External reset

An external reset is generated if "L" level is input to the external reset pin ($\overline{\text{RST}}$).

An external input reset signal is received asynchronously with the operating clock of the microcontroller via the internal noise filter and then generates an internal reset signal that is synchronized with the machine clock to initialize the internal circuit. Therefore, the operating clock of the microcontroller is necessary for initializing the internal circuit. In order to operate with the external clock, external clock signals must be input. However, the external pins (including I/O ports and peripheral functions) are reset asynchronously. In addition, there is a standard value of the pulse width for external reset input. If the value is below the standard value, a reset signal may not be accepted.

The standard value is shown in the device data sheet. Design an external reset circuit that satisfies the standard value.

4.1.1.2 Software reset

Writing "1" to the software reset bit of the standby control register (STBC:SRST) generates a software reset.

4.1.1.3 Watchdog reset

After the watchdog timer starts, a watchdog reset is generated if the watchdog timer is not cleared within a predetermined period of time.

4.1.1.4 Power-on reset

A power-on reset is generated when the power is switched on.

4.1.1.5 Low-voltage detection reset

The low-voltage detection reset circuit generates a reset if the power supply voltage falls below a predetermined level.

The logical function of the low-voltage detection reset is equivalent to that of the power-on reset. All information relating to the power-on reset of this hardware manual also applies to the low-voltage detection reset.

However, the LVD reset voltage selection ID register (LVDR), LVD reset circuit password register (LVDPW) and LVD reset circuit control register (LVDCC) of the low-voltage detection reset circuit are not reset by the low-voltage detection reset.

For details of the low-voltage detection reset, see Chapter 17.Low-Voltage Detection Reset Circuit.

4.1.2 Reset Time

The reset time varies according to the reset source.

- In the case of software reset, watchdog reset and external reset:
  The reset time is affected by the number of machine cycles selected before a reset, the RAM access protection function inhibiting resets during the RAM access, and the sub-CR clock oscillation stabilization wait time. The effective time of the RAM access protection function lengthens according to the number of machine clock cycles selected before a reset.
  When a reset occurs with the sub-CR clock oscillation stabilization bit in the system clock control register 2 (SYCC2:SCRDY) set to "1", the device is released from the reset state after the main CR clock oscillation stabilization wait time elapses.
  When a reset occurs with the sub-CR clock oscillation stabilization bit in the system clock control register 2 (SYCC2:SCRDY) set to "0", the device is released from the reset state after both sub-CR clock oscillation stabilization wait time and main CR clock oscillation stabilization wait time elapse.
- In the case of power-on reset and low-voltage detection reset:
  The device is released from the reset state after both sub-CR clock oscillation stabilization wait time and main CR clock oscillation stabilization wait time elapse.

4.1.3 Reset Output

When the reset input function is effective and the reset output function is effective, the $\overline{\text{RST}}$ pin outputs "L" level while resetting it. However, the function to output "L" level is not provided for external reset in the reset pin.

For details of the reset input function and the reset output function setting, see Chapter 29.System Configuration Controller.

4.1.4 Overview of Reset Operation

Figure 4-1. Reset Operation Flow

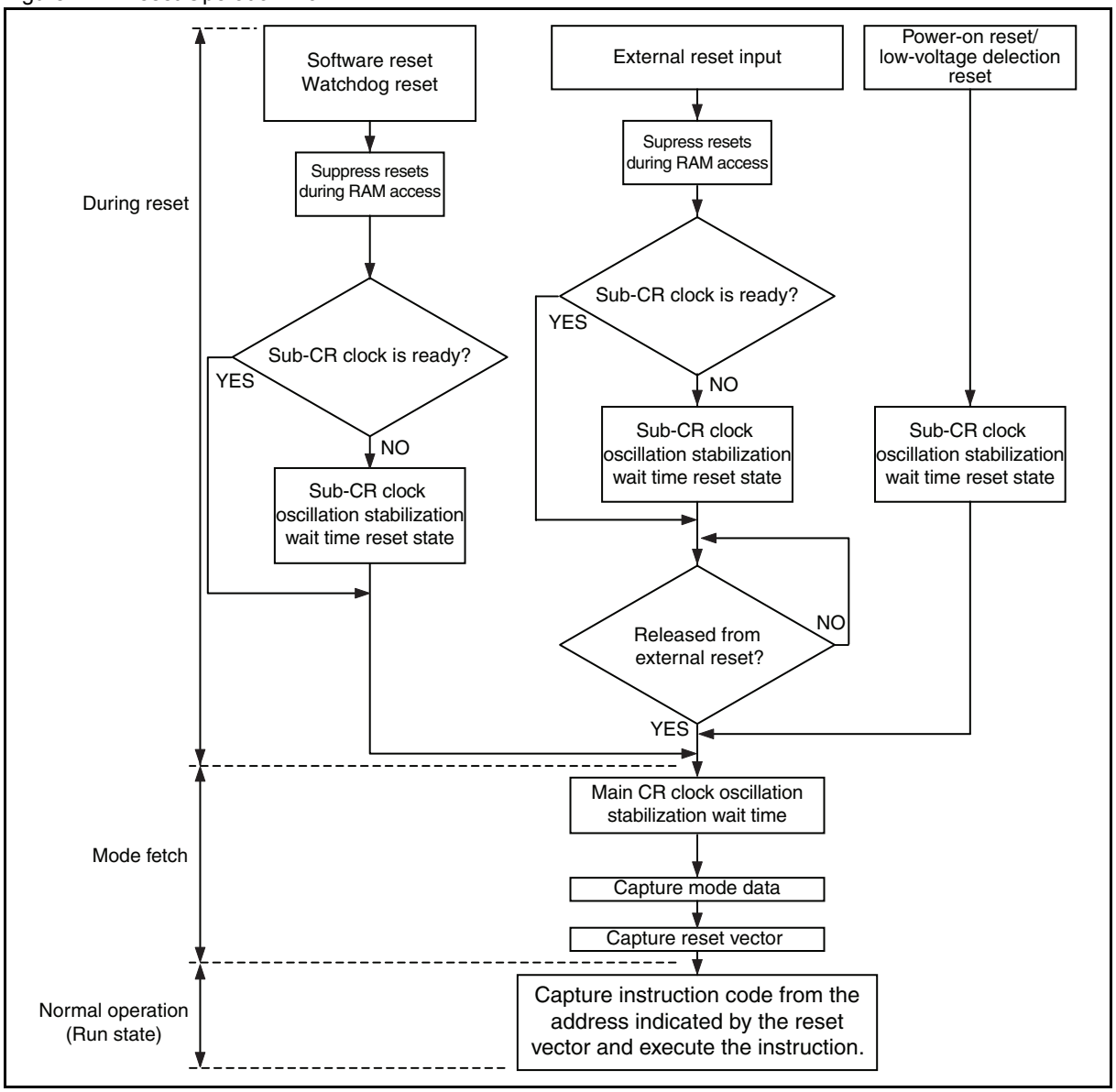

In any reset, the CPU performs mode fetch after the main CR clock oscillation stabilization wait time elapses.

4.1.5 Effect of Reset on RAM Contents

When a reset occurs, the CPU halts the operation of the command currently being executed, and enters the reset state. However, during RAM access execution, in order to protect the RAM access, an internal reset signal synchronized with the machine clock is generated after an RAM access ends. This function prevents a word-data write operation from being interrupted by a reset while data of two bytes is being written.

4.1.6 Pin State During a Reset

When a reset occurs, an I/O port or a peripheral resource pin remains high impedance until the setting of that I/O port or that peripheral resource pin by software is executed after the reset is released.

Note:

Connect a pull-up resistor to a pin that becomes high impedance during a reset to prevent the device from malfunctioning.

For details of the states of all pins during a reset, refer to the device data sheet.

4.2 Register

This section provides details of the register for reset.

Table 4-2. List of Register for Reset

Register abbreviation	Register name	Reference
RSRR	Reset source register	4.2.1

4.2.1 Reset Source Register (RSRR)

The reset source register indicates the source of a reset generated.

Register Configuration

bit	7	6	5	4	3	2	1	0
Field	—	—	—	EXTS	WDTR	PONR	HWR	SWR
Attribute	—	—	—	R/W	R/W	R/W	R/W	R/W
Initial value	0	0	0	X	X	X	X	X

Register Functions

[bit7:5] Undefined bits

Their read values are always "0". Writing values to these bits has no effect on operation.

[bit4] EXTS: External reset flag bit

When this bit is set to "1", that indicates an external reset has occurred.

When any other reset occurs, this bit retains the value that has existed before such reset occurs.

A read access or a write access (writing "0" or "1") to this bit sets it to "0".

bit4	Details
Read access	The read value is always "0".
Being set to "1"	Indicates that the an external reset has occurred.
Write access	Sets this bit to "0".

[bit3] WDTR: Watchdog reset flag bit

When this bit is set to "1", that indicates a watchdog reset has occurred.

When any other reset occurs, this bit retains the value that has existed before such reset occurs.

A read access or a write access (writing "0" or "1") to this bit sets it to "0".

bit3	Details
Read access	The read value is always "0".
Being set to "1"	Indicates that the a watchdog reset has occurred.
Write access	Sets this bit to "0".

[bit2] PONR: Power-on reset flag bit

When this bit is set to "1", that indicates a power-on reset or a low-voltage detection reset has occurred.

When any other reset occurs, this bit retains the value that has existed before such reset occurs.

A read access or a write access (writing "0" or "1") to this bit sets it to "0".

bit2	Details
Read access	The read value is always "0".
Being set to "1"	Indicates that the a power-on reset or a low-voltage detection reset has occurred.
Write access	Sets this bit to "0".

[bit1] HWR: Hardware reset flag bit

When this bit is set to "1", that indicates a hardware reset (power-on reset, low-voltage detection reset, external reset or watchdog reset) has occurred. Therefore, when any of bit2 to bit4 is set to "1", this bit is set to "1" as well.

When a software reset occurs, the bit retains the value that has existed before the software reset occurs.

A read access or a write access (writing "0" or "1") to this bit sets it to "0".

bit1	Details
Read access	The read value is always "0".
Being set to "1"	Indicates that the a hardware reset has occurred.
Write access	Sets this bit to "0".

[bit0] SWR: Software reset flag bit

When this bit is set to "1", that indicates a software reset has occurred.

When a hardware reset occurs, the bit retains the value that has existed before the hardware reset occurs.

A read access or a write access (writing "0" or "1") to this bit or a power-on reset sets it to "0".

bit0	Details
Read access	The read value is always "0".
Being set to "1"	Indicates that the a software reset has occurred.
Write access	Sets this bit to "0".

Note:

Since reading the reset source register clears its contents, save the contents of this register to the RAM before using those contents for calculation.

4.2.2 State of Reset Source Register (RSRR)

Table 4-3. State of Reset Source Register

Reset source	EXTS	WDTR	PONR	HWR	SWR
Power-on reset	×	×	1	1	0
Low-voltage detection reset	×	×	1	1	0
Software reset	△	△	△	△	1
Watchdog reset	△	1	△	1	△
External reset	1	△	△	1	△

1:Flag set

△:Previous state kept

×:Indeterminate

EXTS:When this bit is set to "1", that indicates an external reset has occurred.

WDTR:When this bit is set to "1", that indicates a watchdog reset has occurred.

PONR:When this bit is set to "1", that indicates a power-on reset or low-voltage detection reset has occurred.

HWR:When this bit is set to "1", that indicates one of the following reset has occurred: an external reset, a watchdog reset, a power-on reset or a low-voltage detection reset.

SWR:When this bit is set to "1", that indicates that a software reset has occurred.

4.3 Notes on Using Reset

This section provides notes on using the reset.

4.3.1 Notes on Using Reset

Initialization of registers and bits by reset source

Some registers and bits are initialized only by a certain reset source.

- The type of reset source determines which bit in the reset source register (RSRR) is to be initialized.
- The oscillation stabilization wait time setting register (WATR) of the clock controller can only be initialized by a power-on reset.

5. Interrupts

This chapter describes the interrupts.

5.1 Interrupts

5.1 Interrupts

This section describes the interrupts.

Overview of Interrupts

The New 8FX family has 24 interrupt request inputs for respective peripheral functions, for each of which an interrupt level can be set independently to each other.

When a peripheral function generates an interrupt request, the interrupt request is output to the interrupt controller. The interrupt controller checks the interrupt level of that interrupt request and then notifies the CPU of the generation of the interrupt. The CPU processes that interrupt according to the interrupt acceptance status. The device wakes up from standby mode by an interrupt request generated in standby mode and resumes executing instructions.

Interrupt Requests from Peripheral Functions

When the CPU receives an interrupt request, it branches to the interrupt service routine with the interrupt vector table address corresponding to the interrupt request as the address of the branch destination.

The priority of each interrupt request in interrupt processing can be set to one of the four levels by the interrupt level setting registers (ILR0 to ILR5).

While an interrupt is being processed in the interrupt service routine, if another interrupt whose interrupt request is of the same level or below the one of the interrupt being processed is generated, it is processed after the current interrupt service routine is completed. In addition, if multiple interrupt requests that are set to the same interrupt level are made, IRQ00 is at the top of the priority order.

For interrupt sources, refer to "Interrupt Source Table" in the device data sheet.

5.1.1 Interrupt Level Setting Registers (ILR0 to ILR5)

The interrupt level setting registers (ILR0 to ILR5) contain 24 pairs of 2-bit data assigned to the interrupt requests of different peripheral functions. Each pair of bits (interrupt level setting bits) is used to set the interrupt level of an interrupt request.

Register Configuration

ILR0

bit	7	6	5	4	3	2	1	0
Field	L03[1:0]		L02[1:0]		L01[1:0]		L00[1:0]	
Attribute	R/W	R/W	R/W	R/W	R/W	R/W	R/W	R/W
Initial value	1	1	1	1	1	1	1	1

ILR1

bit	7	6	5	4	3	2	1	0
Field	L07[1:0]		L06[1:0]		L05[1:0]		L04[1:0]	
Attribute	R/W	R/W	R/W	R/W	R/W	R/W	R/W	R/W
Initial value	1	1	1	1	1	1	1	1

ILR2

bit	7	6	5	4	3	2	1	0
Field	L11[1:0]		L10[1:0]		L09[1:0]		L08[1:0]	
Attribute	R/W	R/W	R/W	R/W	R/W	R/W	R/W	R/W
Initial value	1	1	1	1	1	1	1	1

ILR3

bit	7	6	5	4	3	2	1	0
Field	L15[1:0]		L14[1:0]		L13[1:0]		L12[1:0]	
Attribute	R/W	R/W	R/W	R/W	R/W	R/W	R/W	R/W
Initial value	1	1	1	1	1	1	1	1

ILR4

bit	7	6	5	4	3	2	1	0
Field	L19[1:0]		L18[1:0]		L17[1:0]		L16[1:0]	
Attribute	R/W	R/W	R/W	R/W	R/W	R/W	R/W	R/W
Initial value	1	1	1	1	1	1	1	1

ILR5

bit	7	6	5	4	3	2	1	0
Field	L23[1:0]		L22[1:0]		L21[1:0]		L20[1:0]	
Attribute	R/W	R/W	R/W	R/W	R/W	R/W	R/W	R/W
Initial value	1	1	1	1	1	1	1	1

The interrupt level setting registers assign a pair of bits to every interrupt request. The values of interrupt level setting bits in these registers represent the priority of an interrupt request (interrupt level: 0 to 3) in interrupt processing.

The interrupt level setting bits are compared with the interrupt level bits in the condition code register (CCR:IL[1:0]).

If the interrupt level of an interrupt request is 3, the CPU ignores that interrupt request.

Table 5-1 shows the relationships between interrupt level setting bits and interrupt levels.

Table 5-1. Relationships Between Interrupt Level Setting Bits and Interrupt Levels

LXX[1:0]	Interrupt level	Priority
00	0	Highest
01	1	↕
10	2	
11	3	Lowest (No interrupt)

XX:00 to 23 Number of an interrupt request

While the main program is being executed, the interrupt level bits in the condition code register (CCR:IL[1:0]) are "0b11".

5.1.2 Interrupt Processing

When an interrupt request is made by a peripheral function, the interrupt controller notifies the CPU of the interrupt level of that interrupt request. When the CPU is ready to accept interrupts, it halts the program it is executing and executes an interrupt service routine.

5.1.2.1 Interrupt Processing

The procedure for processing an interrupt is as follows: the generation of an interrupt source in a peripheral function, the execution of the main program, the setting of the interrupt request flag bit, the checking of the interrupt request enable bit, the determination of the interrupt level (ILR0 to ILR5 and CCR:IL[1:0]), the checking for interrupt requests of the same interrupt level made simultaneously, and the checking of the interrupt enable flag (CCR:I).

Figure 5-1 shows the interrupt processing.

Figure 5-1. Interrupt Processing

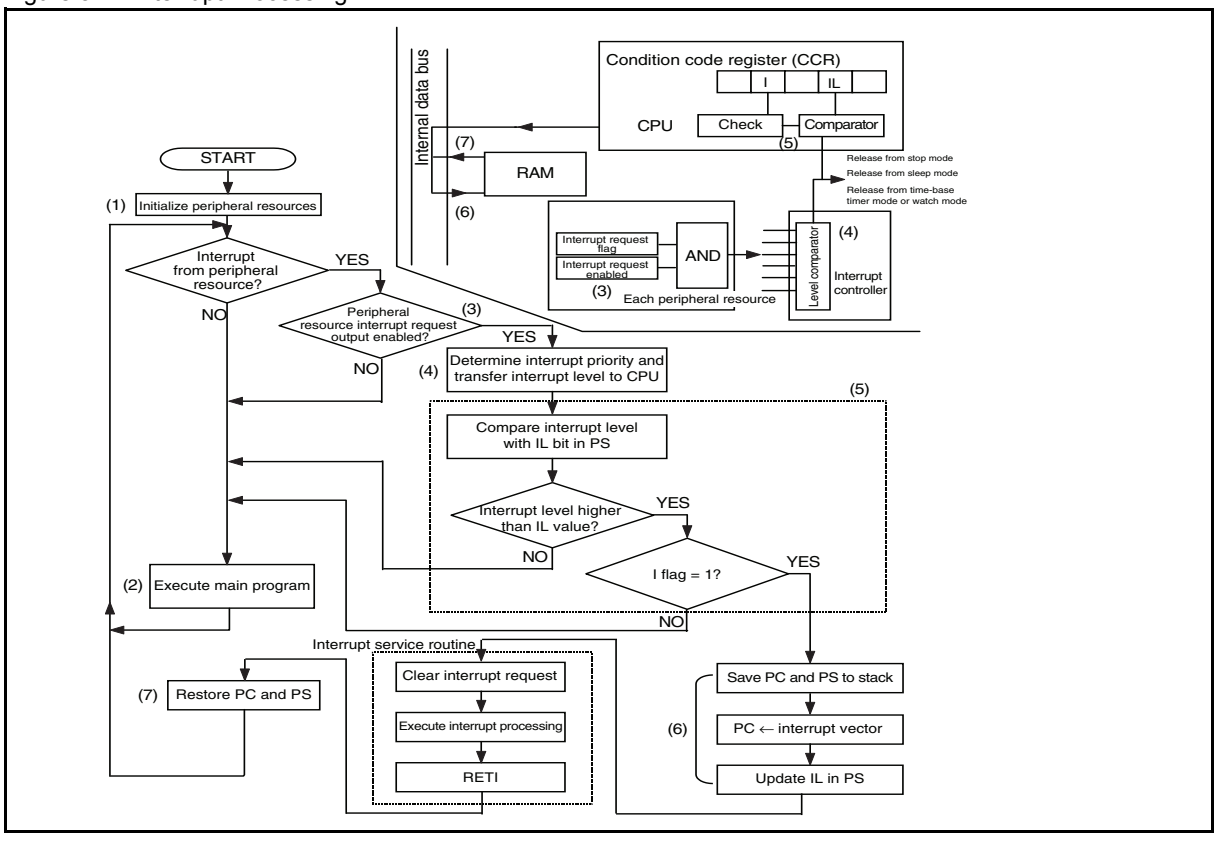

1. All interrupt requests are disabled immediately after a reset. In the peripheral function initialization program, initialize those peripheral functions that generate interrupts and set their interrupt levels in their respective interrupt level setting registers (ILR0 to ILR5) before starting operating such peripheral functions. The interrupt level can be set to 0, 1, 2, or 3. Level 0 is given the highest priority, and level 1 the second highest. Assigning level 3 to a peripheral function disables interrupts from that peripheral function.
2. Execute the main program (or the interrupt service routine in the case of nested interrupts).
3. When an interrupt source is generated in a peripheral function, the interrupt request flag bit for that peripheral function is set to "1". Provided that the interrupt request enable bit for that peripheral function has been set to the value that enables interrupts, an interrupt request of that peripheral function is output to the interrupt controller.
4. The interrupt controller keeps monitoring interrupt requests from individual peripheral functions and notifies the CPU of the interrupt level having priority over the others among interrupt levels already made. If there are interrupt requests having the same interrupt level, their positions in the priority order are also compared in the interrupt controller.
5. If the interrupt level received has priority over (smaller interrupt level number) the level set in the interrupt level bits in the condition code register (CCR:IL[1:0]), the CPU checks the content of the interrupt enable flag (CCR:I), and accepts the interrupt provided that interrupts have been enabled (CCR:I = 1).
6. The CPU saves the contents of the program counter (PC) and the program status (PS) to the stack, captures the start address of the interrupt service routine from the corresponding interrupt vector table address, modifies the values of the interrupt level bits in the condition code register (CCR:IL[1:0]) to the values of the interrupt level received, then starts executing the interrupt service routine.
7. Finally, the CPU uses the RETI instruction to restore the values of the program counter (PC) and the program status (PS) from the stack and resumes executing the instruction following the one executed just before the interrupt.

Note:

- The interrupt request flag bit for a peripheral function is not automatically cleared to "0" after an interrupt request is accepted. Therefore, clear such bit to "0" by using a program (writing "0" to the interrupt request flag bit) in the interrupt service routine.

The low power consumption mode (standby mode) is released by an interrupt. For details, see 3.5 Operations in Low Power Consumption Mode (Standby Mode).

5.1.3 Nested Interrupts

Different interrupt levels can be assigned to multiple interrupt requests from peripheral functions in the interrupt level setting registers (ILR0 to ILR5) to process nested interrupts.

5.1.3.1 Nested Interrupts

During the execution of an interrupt service routine, if another interrupt request whose interrupt level has priority over the interrupt level of the interrupt being processed is made, the CPU suspends the current interrupt processing and accepts the interrupt request given priority. The interrupt level of an interrupt request can be set to 0 to 3. If it is set to 3, the CPU does not accept that interrupt request.

[Example: Nested interrupts]

In the following example of nested interrupts, assuming that the external interrupt is to be given priority over the timer interrupt, the interrupt level of the timer interrupt is set to 2 and that of the external interrupt to 1. If the external interrupt is generated while the timer interrupt is being processed, they are processed as shown in Figure 5-2.

Figure 5-2. Example of Nested Interrupts

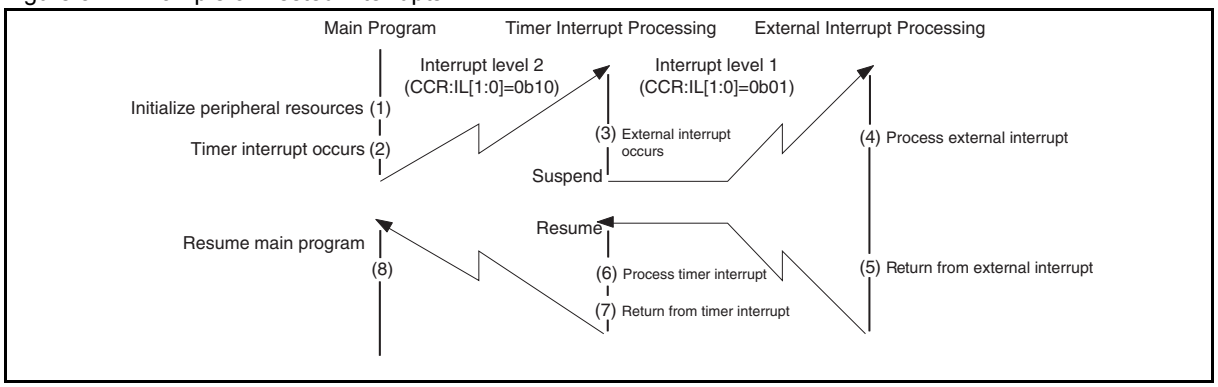

- While the timer interrupt is being processed, the interrupt level bits in the condition code register (CCR:IL[1:0]) hold the same value as that of the interrupt level setting registers (ILR0 to ILR5) corresponding to the timer interrupt (level 2 in the above example). If an interrupt request whose interrupt level has priority over the interrupt level of the timer interrupt (level 1 in the above example) is made, that interrupt is processed first.
- To temporarily disable nested interrupts processing while the timer interrupt is being processed, disable interrupts by setting the interrupt enable flag in the condition code register (CCR:I) to "0", or set the interrupt level bits (CCR:IL[1:0]) to "0b00".
- After the interrupt processing is completed, if the interrupt return instruction (RETI) is executed, the value of the program counter (PC) and that of the program status (PS) are restored, and the CPU resumes executing the program interrupted. In addition, the values of the condition code register (CCR) return to the ones existing before the interrupt due to the restoration of the value of the program status (PS).

5.1.4 Interrupt Processing Time

Before the CPU enters the interrupt service routine after an interrupt request is made, it needs to wait for the interrupt processing time, which consists of the time between the occurrence of an interrupt request and the end of the execution of the instruction being executed, and the interrupt handling time (the time required to initiate interrupt processing) to elapse. The maximum interrupt processing time is 26 machine clock cycles.

5.1.4.1 Interrupt Processing Time

Before executing the interrupt service routine after an interrupt request is made, the CPU needs to wait for the interrupt request sampling wait time and the interrupt handling time to elapse.

- Interrupt request sampling wait time

The CPU decides whether an interrupt request has occurred by sampling the interrupt request during the last cycle of each instruction. Therefore, the CPU cannot recognize interrupt requests while executing an instruction. This sampling wait time reaches its maximum when an interrupt request occurs immediately after the CPU starts executing the DIVU instruction, whose execution cycle is the longest (17 machine clock cycles).

- Interrupt handling time

After accepting an interrupt, the CPU requires nine machine clock cycles to perform the following interrupt processing setup:

1. Saves the value of the program counter (PC) and that of the program status (PS) to the stack.
2. Sets the PC to the start address (interrupt vector) of interrupt service routine.
3. Updates the interrupt level bits (CCR:IL[1:0]) in the program status (PS).

Figure 5-3. Interrupt Processing Time

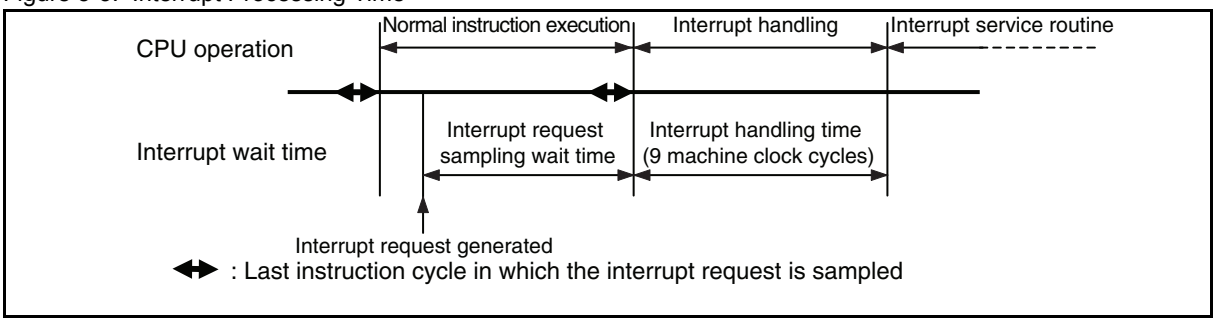

When an interrupt request occurs immediately after the CPU starts executing the DIVU instruction, whose execution cycle is the longest (17 machine clock cycles), the interrupt processing time spans 26 machine clock cycles.

The span of a machine clock cycle varies depending on the clock mode and main clock speed change (gear function). For details, see Chapter 3.Clock Controller .

5.1.5 Stack Operation During Interrupt Processing

This section describes how the contents of a register are saved and restored during interrupt processing.

5.1.5.1 Stack Operation at the Start of Interrupt Processing

Once the CPU accepts an interrupt, it automatically saves the current value of the program counter (PC) and that of the program status (PS) values to the stack.

Figure 5-4 shows the stack operation at the start of interrupt processing.

Figure 5-4. Stack Operation at Start of Interrupt Processing

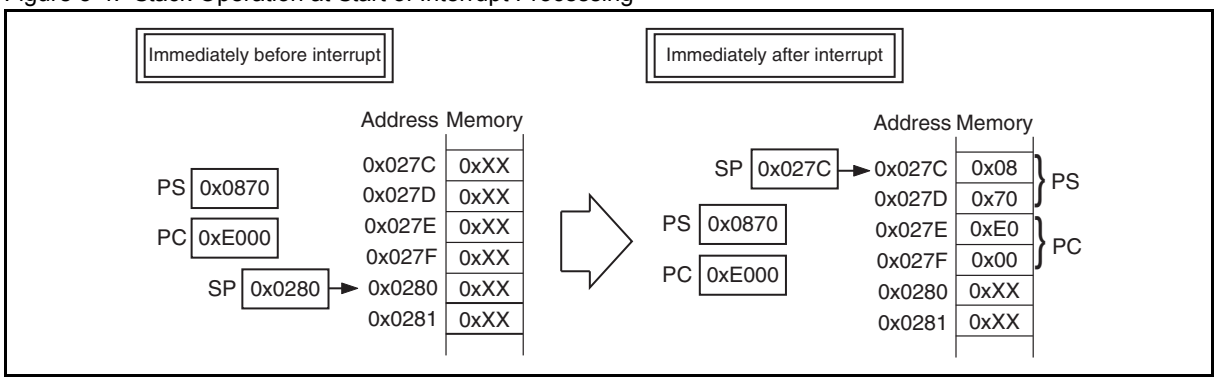

5.1.5.2 Stack Operation after Returning from Interrupt

When the CPU executes the interrupt return instruction (RETI) at the end of interrupt processing, it restores from the stack the value of the program status (PS) first and that of the program counter (PC), which is opposite to the sequence of saving the two values to the stack. After the restoration, both PS and PC return to their states before the start of interrupt processing.

Note:

Since the value of the accumulator (A) and that of the temporary accumulator (T) are not automatically saved to the stack, use the PUSHW and POPW instructions to save and restore the values of A and T.

5.1.6 Interrupt Processing Stack Area

The stack area in RAM is used for interrupt processing. The stack pointer (SP) contains the start address of the stack area.

5.1.6.1 Interrupt Processing Stack Area

The stack area is also used for saving and restoring the program counter (PC) when the subroutine call instruction (CALL) or the vector call instruction (CALLV) is executed, and for saving temporarily and restoring register contents by the PUSHW and POPW instructions.

- The stack area is secured on the RAM together with the data area.
- Initialize the stack pointer (SP) so that it indicates the biggest RAM address and make the data area start from the smallest RAM address.

Figure 5-5 shows an example of setting the interrupt processing stack area.

Figure 5-5. Example of Setting Interrupt Processing Stack Area

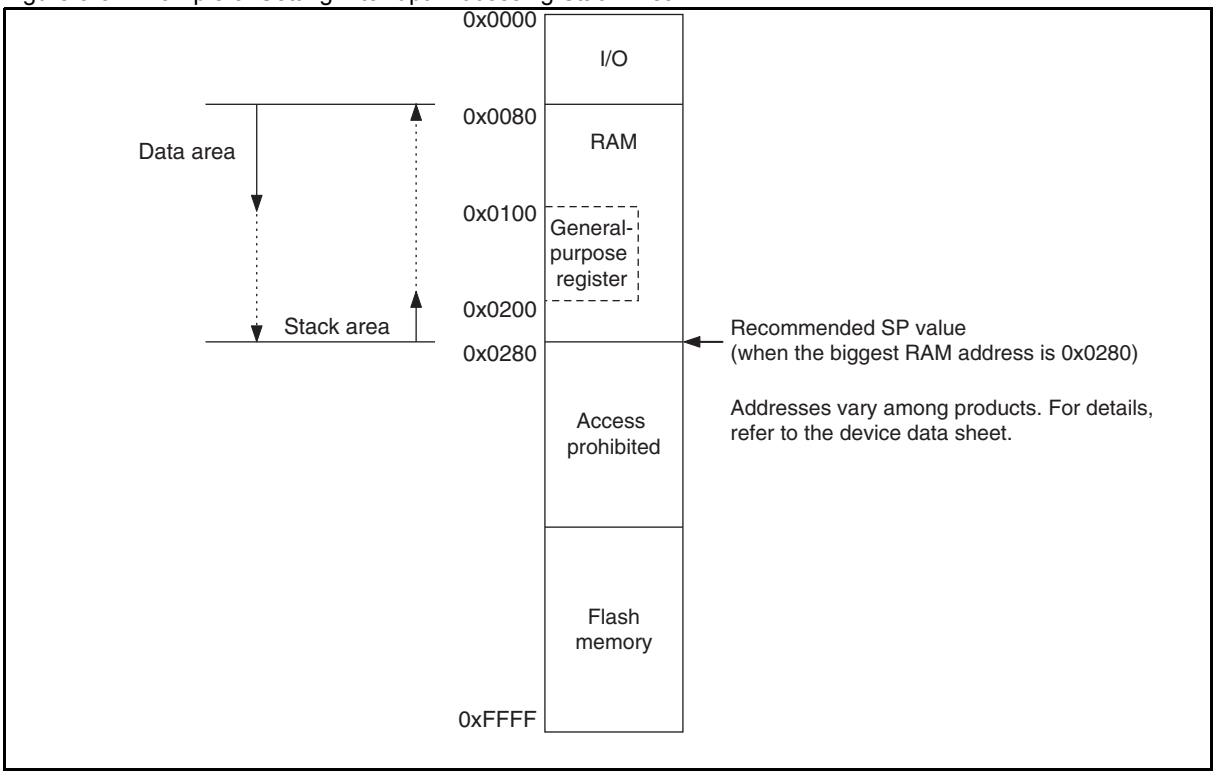

Note:

The stack area is utilized by interrupts, sub-routine calls, the PUSHW instruction, etc. in descending order of addresses. It is released by return instructions (RETI, RET), the POPW instruction, etc. in ascending order of addresses. If the address value of the stack area used decreases due to nested interrupts or subroutine calls, do not let the stack area overlap the data area and the general-purpose register area, both of which retain other data.

6. I/O Ports

This chapter describes the configuration and operations of the I/O port.

6.1 Overview

6.2 Configuration and Operations

6.1 Overview

The I/O port is used to control general-purpose I/O pins.

Overview

The I/O port has functions to output data from the CPU and capture input signals into the CPU with the port data register (PDR). The I/O direction of an individual I/O pin can be set as desired by using the corresponding to that I/O pin in the port direction register (DDR).

The number of I/O ports varies among products. For the exact number of I/O ports on a product, refer to the device data sheet.

In this chapter, "x" represents the port number in a register name. For details of register names and their respective abbreviations of a product, refer to the device data sheet.

Table 6-1 lists the registers for each port.

Table 6-1. List of Port Registers

Register name	Register abbreviation
Port x data register	PDRx
Port x direction register	DDRx
Port x pull-up register	PULx
A/D input disable register (upper)*	AIDRH
A/D input disable register (lower)*	AIDRL

*: Refer to "I/O MAP" in the device data sheet for the availability of the A/D input disable register (upper) and A/D input disable register (lower)

6.2 Configuration and Operations

This section focuses on its configuration and operations as a general-purpose I/O port. For details of peripheral functions, see their respective chapters.

6.2.1 Configuration of I/O Port

An I/O port is made up of the following elements.

- General-purpose I/O pins/peripheral function I/O pins
- Port x data register (PDRx)
- Port x direction register (DDRx)
- Port x pull-up register (PULx)
- A/D input disable register (upper) (AIDRH)
- A/D input disable register (lower) (AIDRL)

6.2.2 Operations of I/O Port

6.2.2.1 Operation as an output port

- A pin becomes an output port if the bit in the DDRx register corresponding to that pin is set to "1".
- For a pin shared with other peripheral functions, disable the output of such peripheral functions.
- When a pin is used as an output port, it outputs the value of the PDRx register to external pins.
- If data is written to the PDRx register, the value is stored in the output latch and is output to the pin set as an output port as it is.
- Reading the PDRx register returns the PDRx register value.

6.2.2.2 Operation as an input port

- A pin becomes an input port if the bit in the DDRx register corresponding to that pin is set to "0".
- For a pin shared with other peripheral functions, disable the output of such peripheral functions.
- When using an analog input shared pin as an input port, set the corresponding bit in the A/D input disable register (upper/lower) (AIDRH/AIDRL) to "1".
- If data is written to the PDRx register, the value is stored in the output latch but is not output to the pin set as an input port.
- Reading the PDRx register returns the pin value. However, if the read-modify-write (RMW) type of instruction is used to read the PDRx register, the PDRx register value is returned.

6.2.2.3 Operation as a peripheral function output pin

- A pin becomes a peripheral function output pin if the peripheral output function is enabled by setting the output enable bit of a peripheral function corresponding to that pin.
- The pin value can be read from the PDRx register even if the peripheral function output is enabled. Therefore, the output value of a peripheral function can be read by the read operation on the PDRx register. However, if the read-modify-write (RMW) type of instruction is used to read the PDRx register, the PDRx register value is returned.

6.2.2.4 Operation as a peripheral function input pin

- To set a pin as an input port, set the bit in the DDRx register bit corresponding to the input pin of a peripheral function to "0".
- When using the analog input shared pin as another peripheral function input pin, configure it as an input port, which is the same as the operation as an input port.
- Reading the PDRx register returns the pin value, regardless of whether the peripheral function uses that pin as its input pin. However, if the read-modify-write (RMW) type of instruction is used to read the PDRx register, the PDRx register value is returned.

6.2.2.5 Operation at reset

If the CPU is reset, all bits in the DDRx register are initialized to "0" and port input is enabled. As for a pin shared with analog input, its port input is disabled because the AIDRH/AIDRL register is initialized to "0".

6.2.2.6 Operation in stop mode and watch mode

- If the pin state setting bit in the standby control register (STBC:SPL) is set to "1" and the device transits to stop mode or watch mode, the pin is compulsorily made to enter the high impedance state regardless of the DDRx register value. The input of that pin is locked at "L" level and blocked in order to prevent leaks due to input open. However, if the interrupt input is enabled for the external interrupt, the input is enabled and not blocked.
- If the pin state setting bit is "0", the state of the port I/O or that of the peripheral function I/O remains unchanged and the output level is maintained.

6.2.2.7 Operation as an analog input pin

- Set the bit in the DDRx register corresponding to the analog input pin to "0" and the bit corresponding to that pin in the AIDRH/AIDRL register to "0".
- For a pin shared with other peripheral functions, disable the output of such peripheral functions. In addition, set the corresponding bit in the PULx register to "0".

6.2.2.8 Operation as an external interrupt input pin

- Set the bit in the DDRx register corresponding to the external interrupt input pin to "0".
- For a pin shared with other peripheral functions, disable the output of such peripheral functions.
- The pin value is always input to the external interrupt circuit. When using a pin for a function other than the interrupt, disable the external interrupt function corresponding to that pin.

6.2.2.9 Operation of the pull-up register

Setting the bit in the PULx register to "1" makes the pull-up resistor be internally connected to the pin. When the pin output is "L" level, the pull-up resistor is disconnected regardless of the value of the PULx register.

7. Time-Base Timer

This chapter describes the functions and operations of the time-base timer.

7.1 Overview

7.2 Configuration

7.3 Interrupt

7.4 Operations and Setting Procedure Example

7.5 Register

7.6 Notes on Using Time-base Timer

7.1 Overview

The time-base timer is a 24-bit free-run down-counting counter. It is synchronized with the main clock divided by two, or with the main CR clock or with the main CR PLL clock. The clock can be selected by the SCS[2:0] bits in the SYCC register. The time-base timer has an interval timer function that can repeatedly generate interrupt requests at regular intervals.

7.1.1 Interval Timer Function

The interval timer function repeatedly generates interrupt requests at regular intervals by using the main clock divided by two, or using the main CR clock or using the main CR PLL clock as the count clock.

- The counter of the time-base timer counts down so that an interrupt request is generated every time a selected interval time elapses.
- The length of an interval time can be selected from the following 16 types.

Table 7-1 shows the interval times available for the time-base timer.

Table 7-1. Interval Times of Time-base Timer

	Interval time if the main clock is used	Interval time if the main CR clock is used	Interval time if the main CR clock is multiplied by a PLL multiplication rate of 2
	($2^n \times 2/F_{CH}$[1])	($2^n \times 1/F_{CRH}$[2])	($2^n \times 1/F_{MCRPLL}$[3])
n=9	256 µs	128 µs	64 µs
n=10	512 µs	256 µs	128 µs
n=11	1.024 ms	512 µs	256 µs
n=12	2.048 ms	1.024 ms	512 µs
n=13	4.096 ms	2.048 ms	1.024 ms
n=14	8.192 ms	4.096 ms	2.048 ms
n=15	16.384 ms	8.192 ms	4.096 ms
n=16	32.768 ms	16.384 ms	8.192 ms
n=17	65.536 ms	32.768 ms	16.384 ms
n=18	131.072 ms	65.536 ms	32.768 ms

Table 7-1. Interval Times of Time-base Timer

	Interval time if the main clock is used	Interval time if the main CR clock is used	Interval time if the main CR clock is multiplied by a PLL multiplication rate of 2
	$(2^n \times 2/F_{CH}$[1]$)$	$(2^n \times 1/F_{CRH}$[2]$)$	$(2^n \times 1/F_{MCRPLL}$[3]$)$
n=19	262.144 ms	131.072 ms	65.536 ms
n=20	524.288 ms	262.144 ms	131.072 ms
n=21	1.049 s	524.288 ms	262.144 ms
n=22	2.097 s	1.049 s	524.288 ms
n=23	4.194 s	2.097 s	1.049 s
n=24	8.389 s	4.194 s	2.097 s

[1]: F_{CH} = 4 MHz
$\therefore 2/F_{CH}$ = 0.5 µs
[2]: F_{CRH} = 4 MHz
$\therefore 1/F_{CRH}$ = 0.25 µs
[3]: F_{MCRPLL} = 8 MHz
PLL multiplication rate = 2
$F_{CRH} \times$ PLL multiplication rate = 4 MHz $\times$ 2 = 8 MHz
$\therefore 1/F_{MCRPLL}$ = 0.125 µs

7.2 Configuration

The time-base timer consists of the following blocks:

- Time-base timer counter
- Counter clear circuit
- Interval timer selector
- Time-base timer control register (TBTC)

7.2.1 Block Diagram of Time-base Timer

Figure 7-1. Block Diagram of Time-base Timer

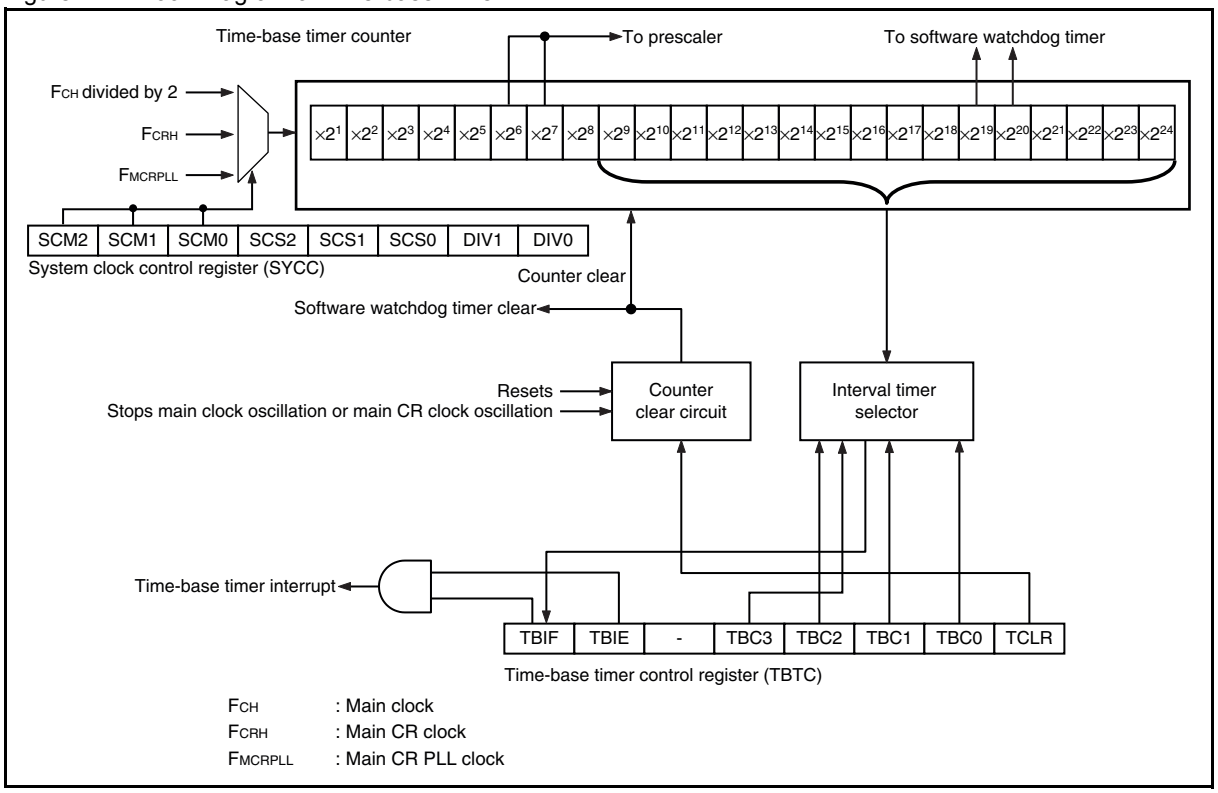

- Time-base timer counter

This is a 24-bit downcounter using the main clock divided by two, the main CR clock or the main CR PLL clock as its count clock.

- Counter clear circuit

This circuit controls the clearing of the time-base timer counter.

- Interval timer selector

This circuit selects one bit out of 16 bits in the 24 bits of the time-base timer counter as the interval timer.

- Time-base timer control register (TBTC)

This register selects the interval time, clears the counter, controls interrupts and checks the state of the time-base timer.

7.2.2 Input Clock

The time-base timer uses the main clock divided by two, the main CR clock or the main CR PLL clock as its input clock (count clock).

7.2.3 Output Clock

The time-base timer supplies clocks to the clock supervisor counter, the software watchdog timer and the prescaler.

7.3 Interrupt

An interrupt request is generated when the interval time selected by the time-base timer elapses (interval timer function).

7.3.1 Interrupt When Interval Function Is in Operation

When the time-base timer counter counts down by using the internal count clock and the time-base timer counter underflows due to the passage of the selected interval time, the time-base timer interrupt request flag bit (TBTC:TBIF) is set to "1". If the time-base timer interrupt request enable bit is enabled (TBTC:TBIE = 1), an interrupt request will be generated to the interrupt controller.

- Regardless of the value of the TBIE bit, the TBIF bit is set to "1" when the selected bit underflows.
- With the TBIF bit having been set to "1", if the TBIE bit is changed from the disable state to the enable state (0 → 1), an interrupt request is generated immediately.
- The TBIF bit will not be set to "1" if the counter is cleared (TBTC:TCLR = 1) at the same time as the time-base timer counter underflows.
- In the interrupt service routine, write "0" to the TBIF bit to clear an interrupt request.

Note:

When enabling the output of interrupt requests after cancelling a reset (TBTC:TBIE = 1), always clear the TBIF bit at the same time (TBTC:TBIF = 0).

Table 7-2. Interrupt of Time-base Timer

Item	Description
Interrupt condition	The interval time set by "TBTC:TBC[3:0]" has elapsed.
Interrupt flag	TBTC:TBIF
Interrupt enable	TBTC:TBIE

7.4 Operations and Setting Procedure Example

This section describes the operations of the interval timer function of the time-base timer.

7.4.1 Operations of Time-base Timer

The counter of the time-base timer is initialized to "0xFFFFFF" after a reset, and starts counting while being synchronized with the main clock divided by two, or with the main CR clock or with the main CR PLL clock.

The time-base timer continues to count down as long as the main clock, the main CR clock or the main CR PLL clock is oscillating. Once the main clock, the main CR clock or the main CR PLL clock stops, the counter stops counting and is initialized to "0xFFFFFF".

To use the interval timer function, do the settings shown in Figure 7-2.

Figure 7-2. Settings of Interval Timer Function

	bit7	bit6	bit5	bit4	bit3	bit2	bit1	bit0
TBTC	TBIF	TBIE	-	TBC3	TBC2	TBC1	TBC0	TCLR
	0	1		◎	◎	◎	◎	0

◎: Bit to be used
1 : Set to "1".
0 : Set to "0".

When the time-base timer clear bit in the time-base timer control register (TBTC:TCLR) is set to "1", the counter of the time-base timer is initialized to "0xFFFFFF" and continues to count down. When the selected interval time has elapsed, the time-base timer interrupt request flag bit in the time-base timer control register (TBTC:TBIF) becomes "1". In other words, an interrupt request is generated at each interval time selected, based on the time when the counter was last cleared.

7.4.2 Clearing Time-base Timer

With the output of the time-base timer being used in other peripheral functions, clearing the time-base timer affects their operations in various ways such as changing the count time of a peripheral function.

When clearing the counter by using the time-base timer clear bit (TBTC:TCLR), modify the settings of other peripheral functions whenever necessary so that clearing the counter does not have any unexpected effect on them.

When the output of the time-base timer is selected as the count clock for the watchdog timer, clearing the time-base timer also clears the watchdog timer.

The time-base timer is cleared not only by the TCLR bit, but also when the main clock, the main CR clock, or the main CR PLL clock is stopped and the oscillation stabilization wait time is necessary. The time-base timer is cleared in the following situations:

- The device transits from the main clock mode, the main CR clock mode or the main CR PLL clock mode to the stop mode.
- The device transits from the main clock mode, the main CR clock mode or the main CR PLL clock mode to the subclock mode or the sub-CR clock mode.
- At power-on
- At low-voltage detection reset

7.4.3 Operation Examples of Time-base Timer

Figure 7-3 shows examples of operations under the following conditions:

1. A power-on reset is generated.
2. The device transits to the sleep mode during the operation of the interval timer function in main clock mode, main CR clock mode or main CR PLL clock mode.
3. The device transits to the stop mode in main clock mode, main CR clock mode or main CR PLL clock mode.
4. A request is generated to clear the counter.

If the device transits to the time-base timer mode, the same operations are executed as those executed when the device transits to the sleep mode.

In stop mode in which the clock mode is subclock mode, sub-CR clock mode, main clock mode, main CR clock mode or main CR PLL clock mode, the timer operation stops because it is cleared and the main clock stops.

Figure 7-3. Operations of Time-base Timer

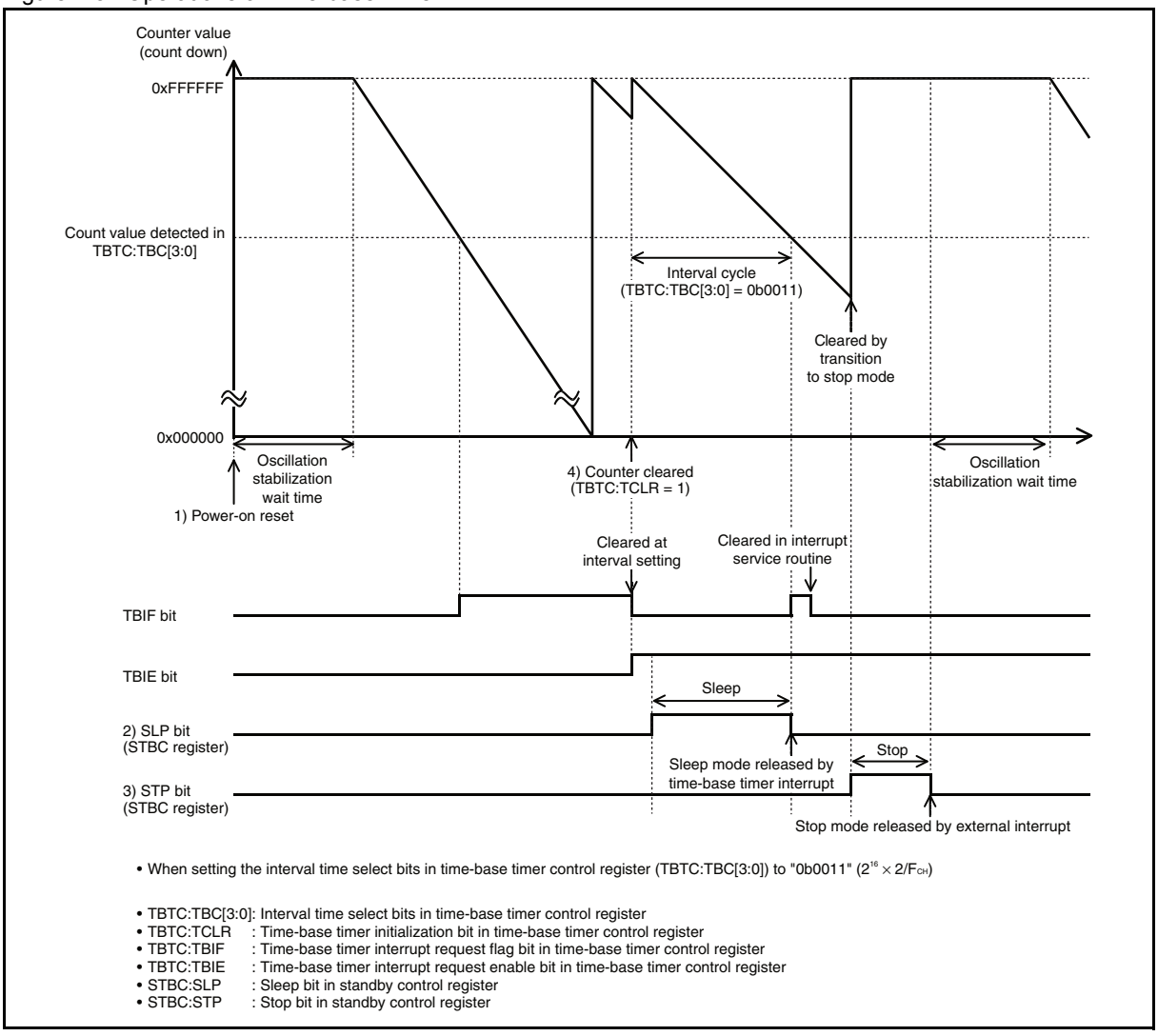

- When setting the interval time select bits in time-base timer control register (TBTC:TBC[3:0]) to "0b0011" ($2^{16} \times 2/F_{CH}$)

- TBTC:TBC[3:0]: Interval time select bits in time-base timer control register
- TBTC:TCLR : Time-base timer initialization bit in time-base timer control register
- TBTC:TBIF : Time-base timer interrupt request flag bit in time-base timer control register
- TBTC:TBIE : Time-base timer interrupt request enable bit in time-base timer control register
- STBC:SLP : Sleep bit in standby control register
- STBC:STP : Stop bit in standby control register

7.4.4 Setting Procedure Example

Below is an example of procedure for setting the time-base timer.

- Initial settings

1. Set the interrupt level. (ILR*)
2. Set the interval time. (TBTC:TBC[3:0])
3. Enable interrupts and clear the interrupt request flag. (TBTC:TBIE = 1, TBTC:TBIF = 0)
4. Clear the counter. (TBTC:TCLR = 1)

*: For details of the interrupt level setting register (ILR), refer to Chapter 5.Interrupts in this hardware manual and "IInterrupt Source Table" in the device data sheet.

- Processing interrupts

1. Clear the interrupt request flag. (TBTC:TBIF = 0)
2. Clear the counter. (TBTC:TCLR = 1)

7.5 Register

This section describes the register of the time-base timer.

Table 7-3. List of Time-base Timer Register

Register abbreviation	Register name	Reference
TBTC	Time-base timer control register	7.5.1

7.5.1 Time-base Timer Control Register (TBTC)

The time-base timer control register (TBTC) selects the interval time, clears the counter, controls interrupts and checks the status of the time-base timer.

Register Configuration

bit	7	6	5	4	3	2	1	0
Field	TBIF	TBIE	—	TBC3	TBC2	TBC1	TBC0	TCLR
Attribute	R/W	R/W	—	R/W	R/W	R/W	R/W	W
Initial value	0	0	0	0	0	0	0	0

Register Functions

[bit7] TBIF: Time-base timer interrupt request flag bit

This bit is set to "1" when the interval time selected by the time-base timer has elapsed.

When this bit and the time-base timer interrupt request enable bit (TBIE) are set to "1", an interrupt request is output.

When read by the read-modify-write (RMW) type of instruction, this bit always returns "1".

bit7	Details
Reading "0"	Indicates that the interval time has not elapsed.
Reading "1"	Indicates that the interval time has elapsed.
Writing "0"	Clears this bit.
Writing "1"	Has no effect on operation.

[bit6] TBIE: Time-base timer interrupt request enable bit

This bit enables or disables output of interrupt requests to interrupt controller.
When this bit and the time-base timer interrupt request flag bit (TBIF) are set to "1", a time-base timer interrupt request is output.

bit6	Details
Writing "0"	Disables the time-base timer interrupt request.
Writing "1"	Enables the time-base timer interrupt request.

[bit5] Undefined bit

The read value is always "0". Writing a value to this bit has no effect on operation.

[bit4:1] TBC[3:0]: Interval time select bits

These bits select interval time.

bit4:1	Details		
	Interval time (Main clock, F_{CH} = 4 MHz)	Interval time (Main CR clock, F_{CRH} = 4 MHz)	Interval time (Main CR clock multiplied by a PLL multiplication rate of 2, F_{MCRPLL} = 8 MHz)
Writing "0100"	$2^9 \times 2/F_{CH}$ (256 µs)	$2^9 \times 1/F_{CRH}$ (128 µs)	$2^9 \times 1/F_{MCRPLL}$ (64 µs)
Writing "0000"	$2^{10} \times 2/F_{CH}$ (512 µs)	$2^{10} \times 1/F_{CRH}$ (256 µs)	$2^{10} \times 1/F_{MCRPLL}$ (128 µs)
Writing "0101"	$2^{11} \times 2/F_{CH}$ (1.024 ms)	$2^{11} \times 1/F_{CRH}$ (512 µs)	$2^{11} \times 1/F_{MCRPLL}$ (256 µs)
Writing "0001"	$2^{12} \times 2/F_{CH}$ (2.048 ms)	$2^{12} \times 1/F_{CRH}$ (1.024 ms)	$2^{12} \times 1/F_{MCRPLL}$ (512 µs)
Writing "0110"	$2^{13} \times 2/F_{CH}$ (4.096 ms)	$2^{13} \times 1/F_{CRH}$ (2.048 ms)	$2^{13} \times 1/F_{MCRPLL}$ (1.024ms)
Writing "0010"	$2^{14} \times 2/F_{CH}$ (8.192 ms)	$2^{14} \times 1/F_{CRH}$ (4.096 ms)	$2^{14} \times 1/F_{MCRPLL}$ (2.048 ms)
Writing "0111"	$2^{15} \times 2/F_{CH}$ (16.384 ms)	$2^{15} \times 1/F_{CRH}$ (8.192 ms)	$2^{15} \times 1/F_{MCRPLL}$ (4.096 ms)
Writing "0011"	$2^{16} \times 2/F_{CH}$ (32.768 ms)	$2^{16} \times 1/F_{CRH}$ (16.384 ms)	$2^{16} \times 1/F_{MCRPLL}$ (8.192 ms)
Writing "1000"	$2^{17} \times 2/F_{CH}$ (65.536 ms)	$2^{17} \times 1/F_{CRH}$ (32.768 ms)	$2^{17} \times 1/F_{MCRPLL}$ (16.384 ms)
Writing "1001"	$2^{18} \times 2/F_{CH}$ (131.072 ms)	$2^{18} \times 1/F_{CRH}$ (65.536 ms)	$2^{18} \times 1/F_{MCRPLL}$ (32.768 ms)
Writing "1010"	$2^{19} \times 2/F_{CH}$ (262.144 ms)	$2^{19} \times 1/F_{CRH}$ (131.072 ms)	$2^{19} \times 1/F_{MCRPLL}$ (65.536 ms)
Writing "1011"	$2^{20} \times 2/F_{CH}$ (524.288 ms)	$2^{20} \times 1/F_{CRH}$ (262.144 ms)	$2^{20} \times 1/F_{MCRPLL}$ (131.072 ms)
Writing "1100"	$2^{21} \times 2/F_{CH}$ (1.049 s)	$2^{21} \times 1/F_{CRH}$ (524.288 ms)	$2^{21} \times 1/F_{MCRPLL}$ (262.144 ms)
Writing "1101"	$2^{22} \times 2/F_{CH}$ (2.097 s)	$2^{22} \times 1/F_{CRH}$ (1.049 s)	$2^{22} \times 1/F_{MCRPLL}$ (524.288 ms)
Writing "1110"	$2^{23} \times 2/F_{CH}$ (4.194 s)	$2^{23} \times 1/F_{CRH}$ (2.097 s)	$2^{23} \times 1/F_{MCRPLL}$ (1.049 s)
Writing "1111"	$2^{24} \times 2/F_{CH}$ (8.389 s)	$2^{24} \times 1/F_{CRH}$ (4.194 s)	$2^{24} \times 1/F_{MCRPLL}$ (2.097 s)

[bit0] TCLR: Time-base timer clear bit

This bit clears all bits in the counter of the time-base timer to "1".

bit0	Details
Read access	The read value is always "0".
Writing "0"	Has no effect on operation.
Writing "1"	Clears all bits in the counter of the time-base timer to "1".

Note:

When the output of the time-base timer is selected as the count clock for the software watchdog timer, clear the time-base timer with this bit also clears the software watchdog timer.

7.6 Notes on Using Time-base Timer

This section provides notes on using the time-base timer.

7.6.1 Notes on Using Time-base Timer

- When setting the timer by program

The timer cannot return from interrupt processing when the time-base timer interrupt request flag bit (TBTC:TBIF) is set to "1" and the interrupt request enable bit is enabled (TBTC:TBIE = 1). Always clear the TBIF bit in the interrupt service routine.

- Clearing Time-base Timer

The time-base timer is cleared not only by the time-base timer clear bit (TBTC:TCLR = 1) but also when the oscillation stabilization wait time of the main clock, the main CR clock, or the main CR PLL clock is required. When the time-base timer is selected as the count clock of the software watchdog timer (WDTC:CS[1:0] = 0b00 or 0b01), clearing the time-base timer also clears the software watchdog timer.

- Peripheral functions receiving clock from time-base timer

In the mode where the source oscillation of the main clock is stopped, the counter is cleared and the time-base timer stops operating. In addition, if the counter of the time-base timer is cleared with the output of the time-base timer being used in other peripheral functions, that will affect the operations of such peripheral operations such as the changing of their operating cycles.

After the counter of the time-base timer is cleared, the clock that is output from the time-base timer for the software watchdog timer returns to the initial state. However, since the software watchdog timer counter is also cleared at the same time as the clock for the software watchdog timer returns to the initial state, the software watchdog timer operates in its normal cycle.

8. Hardware / Software Watchdog Timer

This chapter describes the functions and operations of the watchdog timer.

8.1 Overview
8.2 Configuration
8.3 Operations and Setting Procedure Example
8.4 Register
8.5 Notes on Using Watchdog Timer

8.1 Overview

The watchdog timer serves as a counter used to prevent programs from running out of control.

8.1.1 Watchdog Timer Function

The watchdog timer functions as a counter used to prevent programs from running out of control. Once the watchdog timer is activated, its counter needs to be cleared at specified intervals regularly. A watchdog reset is generated if the timer is not cleared within a certain amount of time due to a problem such as a program entering an infinite loop.

8.1.1.1 Count clock for the software/hardware watchdog timer

- For the software watchdog timer, the output of the time-base timer or of the watch prescaler or of the sub-CR timer can be used as the count clock.
- For the hardware watchdog timer, only the output of the sub-CR timer can be used as the count clock.

8.1.1.2 Activation of the software/hardware watchdog timer

- The software/hardware watchdog timer is to be activated according to the values at the addresses 0xFFBE and 0xFFBF on the Flash memory, which are copied to the watchdog timer selection ID register (upper/lower) (WDTH/WDTL) (0x0FEB/0x0FEC).
- In the case of software activation (software watchdog), the watchdog timer register (WDTC) must be set to start the watchdog timer function.
- In the case of hardware activation (hardware watchdog), the watchdog timer starts automatically after a reset. It can also stop or run in stop mode according to the values at the addresses 0xFFBE and 0xFFBF on the Flash memory, which are copied to the watchdog timer selection ID register (upper/lower) (WDTH/WDTL) (0x0FEB/0x0FEC). See Chapter 27.Non-Volatile Register (NVR) Interface for details of the watchdog timer selection ID.
- The intervals of the watchdog timer are shown in Table 8-1. If the counter of the watchdog timer is not cleared, a watchdog reset is generated between the minimum time and the maximum time. Clear the counter of the watchdog timer within the minimum time.

.

Table 8-1. Interval Times of Watchdog Timer

Count clock type	Count clock switch bit CS[1:0], CSP	Interval time	
		Minimum time	Maximum time
Time-base timer output (main clock = 4 MHz)	0b000 (software watchdog timer)	524 ms	1.05 s
	0b010 (software watchdog timer)	262 ms	524 ms
Watch prescaler output (subclock = 32.768 kHz)	0b100 (software watchdog timer)	500 ms	1.00 s
	0b110 (software watchdog timer)	250 ms	500 ms
Sub-CR timer (sub-CR clock = 50 kHz to 150 kHz)	0bXX1[1] (software watchdog timer) or hardware watchdog timer[2]	437 ms	2.62 s

[1]: X = 0 or 1
[2]: CS[1:0] = 0b00, CSP = 1 (read-only)

8.2 Configuration

The watchdog timer consists of the following blocks:

- Count clock selector
- Watchdog timer counter
- Reset control circuit
- Watchdog timer clear selector
- Counter clear control circuit
- Watchdog timer control register (WDTC)

8.2.1 Block Diagram of Watchdog Timer

Figure 8-1. Block Diagram of Watchdog Timer

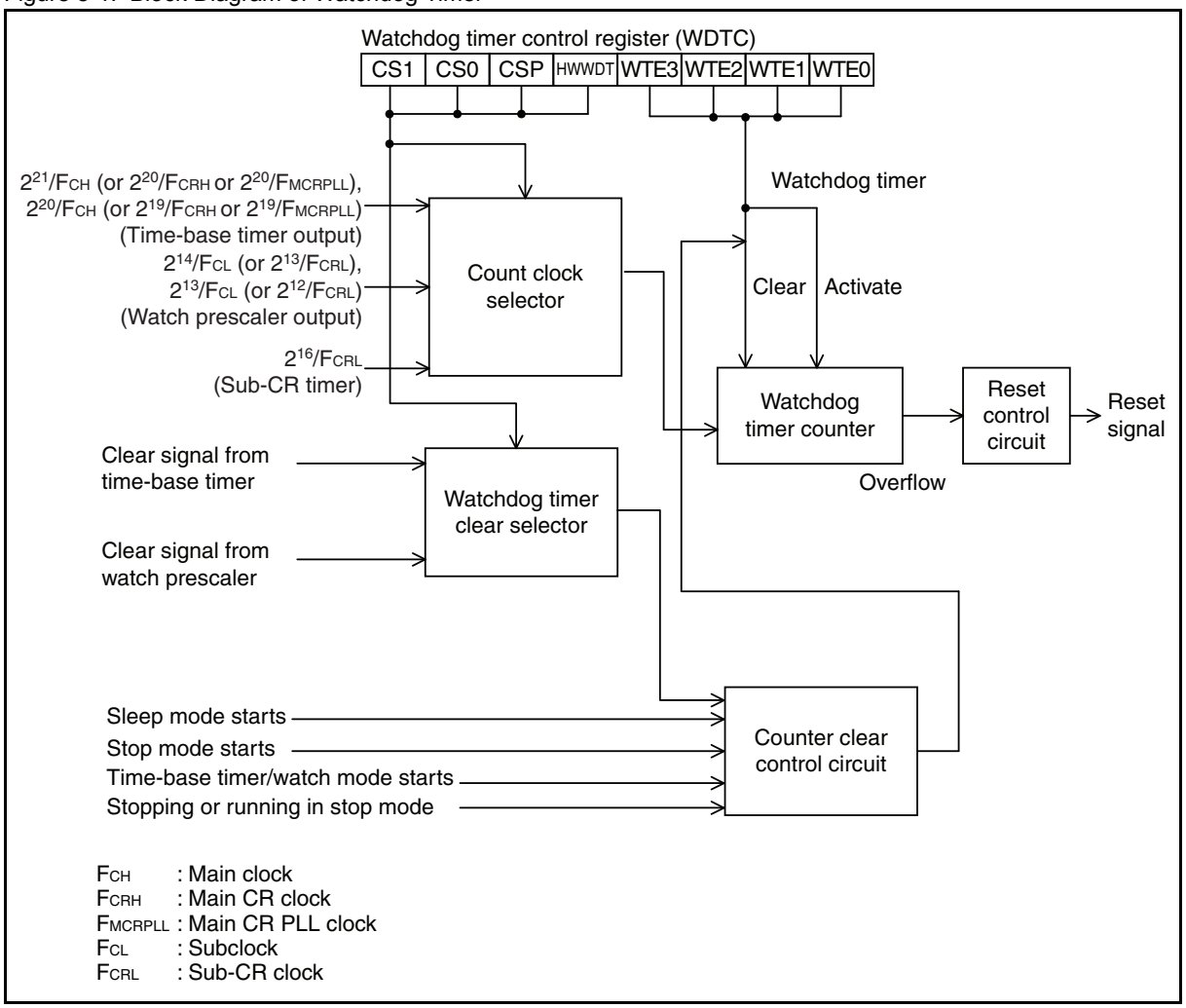

- Count clock selector

This selector selects the count clock of the watchdog timer counter.

- Watchdog timer counter

This is a 1-bit counter that uses the output of the time-base timer, of the watch prescaler or of the sub-CR timer as the count clock.

- Reset control circuit

This circuit generates a reset signal when the watchdog timer counter overflows.

- Watchdog timer clear selector

This selector selects the watchdog timer clear signal.

- Counter clear control circuit

This circuit controls the clearing and stopping of the watchdog timer counter.

- Watchdog timer control register (WDTC)

This register performs setup for activating/clearing the watchdog timer counter as well as for selecting the count clock.

8.2.2 Input Clock

The watchdog timer uses the output clock of the time-base timer, of the watch prescaler or of the sub-CR timer as the input clock (count clock).

8.3 Operations and Setting Procedure Example

The watchdog timer generates a watchdog reset when the watchdog timer counter overflows.

8.3.1 Operations of Watchdog Timer

8.3.1.1 How to activate the watchdog timer

Software watchdog

- The watchdog timer is activated when "0b0101" is written to the watchdog control bits of the watchdog timer control register (WDTC:WTE[3:0]) for the first time after a reset. The count clock switch bits of the watchdog timer control register (WDTC:CS[1:0], CSP) should also be set at the same time.
- Once the watchdog timer is activated, a reset is the only way to stop its operation.

Hardware watchdog

- To activate the hardware watchdog timer, write any value except "0xA596" to the addresses 0xFFBE and 0xFFBF on the Flash memory. After a reset, the data in 0xFFBE and 0xFFBF on the Flash memory are copied to the watchdog timer selection ID register (upper/lower) (WDTH/WDTL) (0x0FEB/0x0FEC). Writing "0xA597" to the addresses 0xFFBE and 0xFFBF on the Flash memory enables the hardware watchdog timer except in standby modes; writing any value other than "0xA596" and "0xA597" enables the hardware watchdog timer in all modes. See Chapter 27.Non-Volatile Register (NVR) Interface for details of the watchdog timer selection ID.
- Start operation after a reset is released.
- CS[1:0] and CSP bits are read-only bits fixed at "0b001".
- The counter of the watchdog timer is cleared by a reset, and the watchdog timer resumes its operation after the reset is released.

8.3.1.2 Clearing the watchdog timer

- When the counter of the watchdog timer is not cleared within the interval time, it overflows, allowing the watchdog timer to generate a watchdog reset.
- The counter of the hardware watchdog timer is cleared when "0b0101" is written to the watchdog control bits of the watchdog timer control register (WDTC:WTE[3:0]). The counter of the software watchdog timer is cleared when "0b0101" is written to the watchdog control bits of the watchdog timer control register (WDTC:WTE[3:0]) for the second time and from the second time onward.
- The watchdog timer is cleared at the same time as the timer selected as the count clock (time-base timer or watch prescaler) is cleared.

8.3.1.3 Operation in standby mode

- In the case of activating the software watchdog timer, or starting the hardware watchdog timer with its operation in standby mode disabled, regardless of the clock mode selected, once the device transits to standby mode, the counter of the watchdog timer is cleared and the watchdog timer stops its operation. When the device wakes up from standby mode, the watchdog timer resumes its operation.
- In the case of activating the hardware watchdog timer with its operation in standby mode enabled, whether the device transits to standby mode or wakes up from standby mode, the counter of the watchdog timer is not cleared and the watchdog timer continues its operation.

Note:

The watchdog timer is also cleared when the timer selected as the count clock (time-base timer or watch prescaler) is cleared. For this reason, the watchdog timer cannot function if the software is set to repeatedly clear the timer selected as the count clock of the watchdog timer at the interval time selected for the watchdog timer.

8.3.1.4 Interval time

The interval time varies depending on the timing of clearing the watchdog timer. Figure 8-2 shows the correlation between the timing of clearing the watchdog timer and the interval time when the time-base timer output $F_{CH}/2^{21}$ (F_{CH}: main clock) is selected as the count clock (main clock = 4 MHz).

Figure 8-2. Clearing Timing and Interval Time of Watchdog Timer

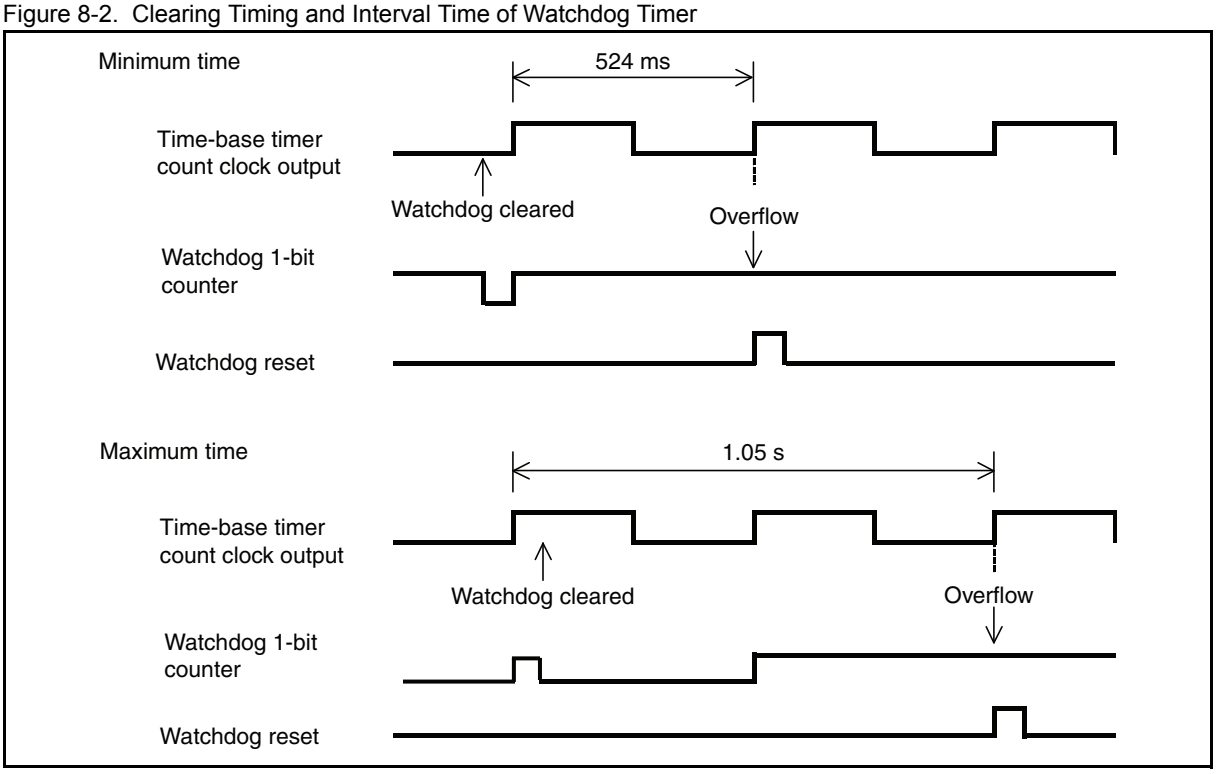

8.3.1.5 Operation in subclock mode

When a watchdog reset is generated in subclock mode, the timer starts operating in main clock mode after the oscillation stabilization wait time has elapsed. The reset signal is output during this oscillation stabilization wait time.

8.3.2 Setting Procedure Example

Below is the procedure for setting the software watchdog timer.

1. Select the count clock. (WDTC:CS[1:0], CSP)
2. Activate the watchdog timer. (WDTC:WTE[3:0] = 0b0101)
3. Clear the watchdog timer. (WDTC:WTE[3:0] = 0b0101)

Below is the procedure for setting the hardware watchdog timer.

1. Write any value except "0xA596" to the addresses 0xFFBE and 0xFFBF on the Flash memory. After a reset, the data in 0xFFBE and 0xFFBF on the Flash memory are copied to the watchdog timer selection ID register (upper/lower) (WDTH/WDTL) (0x0FEB/0x0FEC). Writing "0xA597" to the addresses 0xFFBE and 0xFFBF on the Flash memory enables the hardware watchdog timer except in standby modes; writing any value other than "0xA596" and "0xA597" enables the hardware watchdog timer in all modes. See Chapter 27.Non-Volatile Register (NVR) Interface for details of the watchdog timer selection ID.
2. Clear the watchdog timer. (WDTC:WTE[3:0] = 0b0101)

8.4 Register

This section describes the register of the watchdog timer.

Table 8-2. List of Watchdog Timer Register

Register abbreviation	Register name	Reference
WDTC	Watchdog timer control register	8.4.1

8.4.1 Watchdog Timer Control Register (WDTC)

The watchdog timer control register (WDTC) activates or clears the watchdog timer.

Register Configuration

bit	7	6	5	4	3	2	1	0
Field	CS1	CS0	CSP	HWWDT	WTE3	WTE2	WTE1	WTE0
Attribute and initial values for software watchdog timer								
Attribute	R/W	R/W	R/W	R	W	W	W	W
Initial value	0	0	0	0	0	0	0	0
Attribute and initial values for hardware watchdog timer								
Attribute	R	R	R	R	W	W	W	W
Initial value	0	0	1	1	0	0	0	0

Register Functions

[bit7:6] CS[1:0]: Count clock switch bits

[bit5] CSP: Count clock select sub-CR selector bit

These bits select the count clock of the watchdog timer.

Write to these bits at the same time as activating the watchdog timer by the watchdog control bits.
No change can be made once the watchdog timer is activated.

	bit7	bit6	bit5	Details (F_{CH}: main clock, F_{CRH}: main CR clock, F_{MCRPLL}: main CR PLL clock, F_{CL}: subclock, F_{CRL}: sub-CR clock)
Writing	0	0	0	Output cycle of time-base timer ($2^{21}/F_{CH}$, $2^{20}/F_{CRH}$ or $2^{20}/F_{MCRPLL}$)
Writing	0	1	0	Output cycle of time-base timer ($2^{20}/F_{CH}$, $2^{19}/F_{CRH}$ or $2^{19}/F_{MCRPLL}$)
Writing	1	0	0	Output cycle of watch prescaler ($2^{14}/F_{CL}$ or $2^{13}/F_{CRL}$)
Writing	1	1	0	Output cycle of watch prescaler ($2^{13}/F_{CL}$ or $2^{12}/F_{CRL}$)
Writing	0/1	0/1	1	Output cycle of sub-CR timer ($2^{16}/F_{CRL}$)

Note:

Since the time-base timer is stopped in subclock mode or sub-CR clock mode, always select the output of the watch prescaler in subclock mode.

[bit4] HWWDT: Hardware watchdog timer start bit

This is a read-only bit used to confirm the start/stop of the hardware watchdog timer.

bit4	Details
Reading "0"	Indicates that the hardware watchdog timer has stopped (The software watchdog timer can be activated).
Reading "1"	Indicates that the hardware watchdog timer has been activated.

[bit3:0] WTE[3:0]: Watchdog control bits

These bits controls the watchdog timer.

The read value of these bits is always "0b0000".

bit3:0	Details
Writing "0101"	Activates the watchdog timer (in the first write access after a reset) or clears it (from the second write access after a reset). • In the case of activating the watchdog timer Writing "0101" to these bits in the first write access after a reset starts the software watchdog timer. • In the case of clearing the watchdog timer Writing "0101" to these bits in the first write access or later after a reset clears the hardware watchdog timer. Writing "0101" to these bits in the second write access or later after a reset clears the software watchdog timer.
Writing a value other than "0101"	Has no effect on operation.

Note:

Using the read-modify-write (RMW) type of instruction to access the WDTC register is prohibited.

8.5 Notes on Using Watchdog Timer

This section provides notes on using the watchdog timer.

8.5.1 Notes on Using Watchdog Timer

- Stopping the watchdog timer

Software watchdog timer

Once activated, the watchdog timer cannot be stopped until a reset is generated.

- Selecting the count clock

Software watchdog timer

The count clock switch bits (WDTC:CS[1:0], CSP) can be modified only when the watchdog control bits (WDTC:WTE[3:0]) are set to "0b0101" after the activation of the watchdog timer. The count clock switch bits cannot be set by a bit manipulation instruction. Moreover, the bit settings should not be changed once the timer is activated.

In subclock mode or sub-CR clock mode, the time-base timer does not operate because the main clock, the main CR clock, or the main CR PLL clock stops oscillating.

In order to make the watchdog timer operate in subclock mode or sub-CR clock mode, it is necessary to select the watch prescaler as the count clock beforehand and set WDTC:CS[1:0], CSP to "0b100" or "0b110" or "0bXX1" (X = 0 or 1).

- Clearing the watchdog timer

Clearing the timer (time-base timer, watch prescaler or sub-CR timer) used as the count clock of the watchdog timer also clears the counter of the watchdog timer.

The counter of the watchdog timer is cleared when the watchdog timer transits to sleep mode, stop mode, or watch mode, except in the case of activating hardware watchdog timer whose operation in standby mode has been enabled.

- Programming precaution

When creating a program in which the watchdog timer is cleared repeatedly in the main loop, set the processing time of the main loop including the interrupt processing time to the minimum watchdog timer interval time or shorter.

- Hardware watchdog timer (operation in standby mode has been enabled)

The hardware watchdog timer does not stop in stop mode, sleep mode, time-base timer mode or watch mode. Therefore, the hardware watchdog timer is not cleared by the CPU even if the internal clock stops. (in stop mode, sleep mode, time-base timer mode or watch mode).

Regularly release the device from standby mode and clear the watchdog timer. However, depending on the setting of the oscillation stabilization wait time setting register, a watchdog reset may be generated after the CPU wakes up from stop mode in subclock mode or sub-CR clock mode.

Take account of the setting of the subclock stabilization wait time when selecting the subclock.

9. Watch Prescaler

This chapter describes the functions and operations of the watch prescaler.

9.1 Overview

9.2 Configuration

9.3 Interrupt

9.4 Operations and Setting Procedure Example

9.5 Register

9.6 Notes on Using Watch Prescaler

9.1 Overview

The watch prescaler is a 16-bit down-counting, free-run counter, which is synchronized with the subclock divided by two or the sub-CR clock divided by two. It has an interval timer function that continuously generates interrupt requests at regular intervals.

9.1.1 Interval Timer Function

The interval timer function continuously generates interrupt requests at regular intervals, using the subclock divided by two or the sub-CR clock divided by two as its count clock.

- The counter of the watch prescaler counts down and an interrupt request is generated whenever the selected interval time has elapsed.
- The interval time can be selected from the following eight types:

Table 9-1 shows the interval times of the watch prescaler.

Table 9-1. Interval Times of Watch Prescaler

	Interval time (Sub-CR clock) ($2^n \times 2/F_{CRL}$ [1])	Interval time (Subclock) ($2^n \times 2/F_{CL}$ [2])
n=10	20.48 ms	62.5 ms
n=11	40.96 ms	125 ms
n=12	81.92 ms	250 ms
n=13	163.84 ms	500 ms
n=14	327.68 ms	1 s
n=15	655.36 ms	2 s
n=16	1.311 s	4 s
n=17	2.621 s	8 s

[1]: $2/F_{CRL}$=20 µs when F_{CRL}=100 kHz
[2]: $2/F_{CL}$=61.035 µs when F_{CL}=32.768 kHz

Note: Refer to the device data sheet for the accuracy of the sub-CR clock frequency.

9.2 Configuration

The watch prescaler consists of the following blocks:

- Watch prescaler counter
- Counter clear circuit
- Interval timer selector
- Watch prescaler control register (WPCR)

9.2.1 Block Diagram of Watch Prescaler

Figure 9-1. Block Diagram of Watch Prescaler

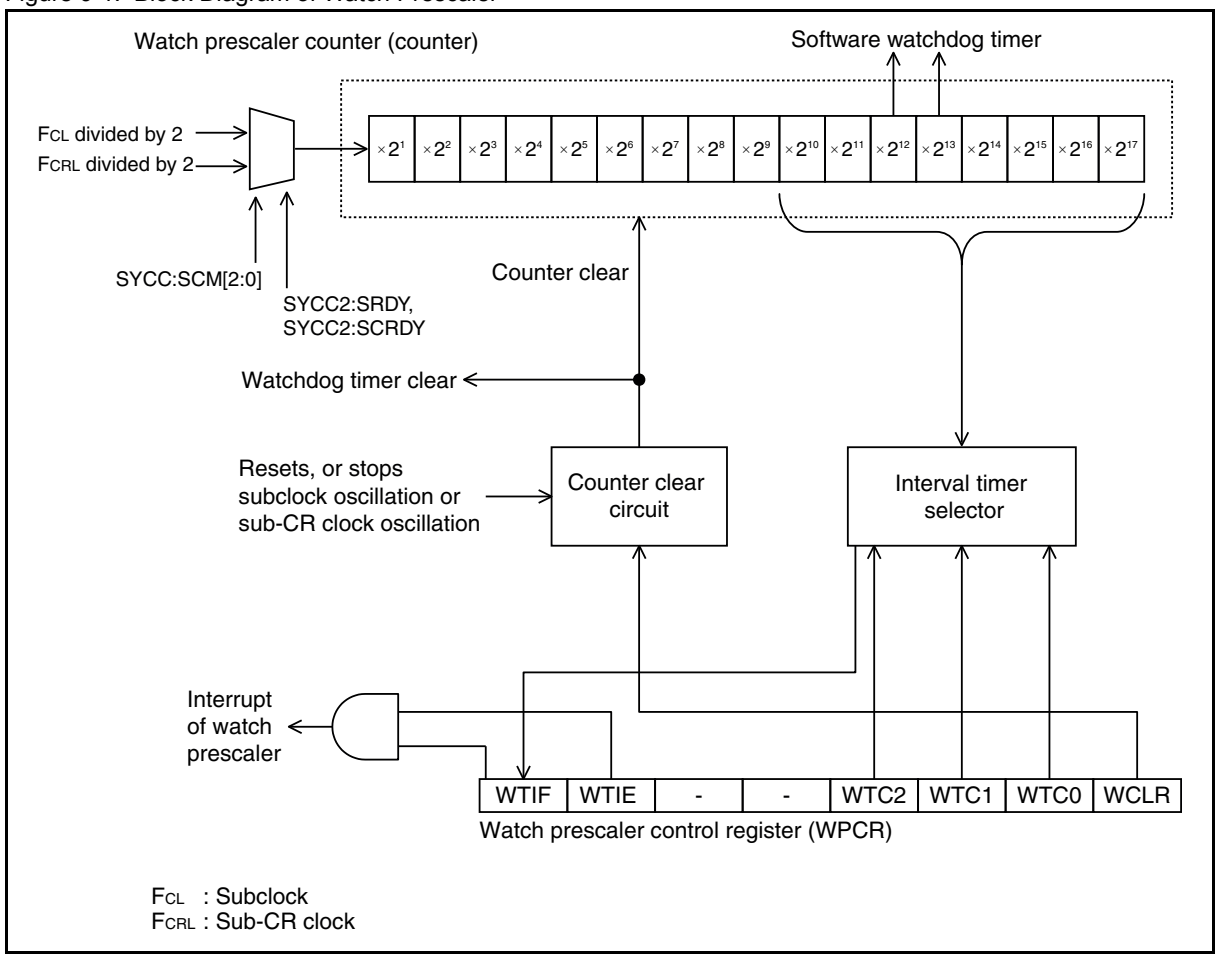

- Watch prescaler counter (counter)

This is a 16-bit downcounter that uses the subclock divided by two or the sub-CR clock divided by two as its count clock.

- Counter clear circuit

This circuit controls the clearing of the watch prescaler.

- Interval timer selector

This circuit selects one out of the eight bits used for the interval timer among 17 bits available in the watch prescaler counter.

- Watch prescaler control register (WPCR)

This register selects the interval time, clears the counter, controls interrupts and checks the status.

9.2.2 Input Clock

The watch prescaler uses the subclock divided by two or the sub-CR clock divided by two as its input clock (count clock).

9.2.3 Output Clock

The watch prescaler supplies its clock to the software watchdog timer.

9.3 Interrupt

An interrupt request is generated when the selected interval time of the watch prescaler has elapsed (interval timer function).

9.3.1 Interrupts in Operation of Interval Timer Function (Watch Prescaler Interrupts)

In any mode except the stop mode in which the subclock mode or the sub-CR clock mode is used, if the watch prescaler counter counts down using the subclock divided by two or the sub-CR clock divided by two and the selected interval time elapses, the watch prescaler interrupt request flag bit is set to "1" (WPCR:WTIF = 1). At that time, if the watch prescaler interrupt request enable bit has been enabled (WPCR:WTIE = 1), an interrupt request is output from the watch prescaler to the interrupt controller.

- Regardless of the value in the WTIE bit, the WTIF bit is set to "1" as soon as the time set by the watch prescaler interrupt interval time select bits has elapsed.
- When the WTIF bit is set to "1", changing the WTIE bit from the disable state to the enable state (WPCR:WTIE = 0 → 1) immediately generates an interrupt request.
- The WTIF bit will not be set to "1" if the counter is cleared (WPCR:WCLR = 1) at the same time as the selected bit overflows.
- Write "0" to the WTIF bit in the interrupt service routine to clear an interrupt request.

Note:

To enable the output of interrupt requests after releasing a reset, set the WTIE bit in the WPCR register to "1" and clear the WTIF bit in the same register simultaneously.

Table 9-2. Interrupt of Watch Prescaler

Item	Description
Interrupt condition	Interval time set by "WPCR:WTC[2:0]" has elapsed.
Interrupt flag	WPCR:WTIF
Interrupt enable	WPCR:WTIE

9.4 Operations and Setting Procedure Example

The watch prescaler operates as an interval timer.

9.4.1 Operations of Interval Timer Function (Watch Prescaler)

The counter of the watch prescaler continues to count down using the subclock divided by two or the sub-CR clock divided by two as its count clock as long as the subclock or the sub-CR clock oscillates.

When cleared (WPCR:WCLR = 1), the counter starts counting down from "0xFFFF". Once it reaches "0x0000", it returns to "0xFFFF" to continue counting. As soon as the time set by the interrupt interval time select bits has elapsed during the counting down, the watch prescaler interrupt request flag bit (WPCR:WTIF) is set to "1" in any mode except the stop mode in which the subclock mode or the sub-CR clock mode is used. In other words, a watch interrupt request is generated at every selected interval time, based on the time when the counter was last cleared.

9.4.2 Clearing Watch Prescaler

If the watch prescaler is cleared, other peripheral functions that are using the watch prescaler output are affected by changes in count time and by other factors.

When clearing the counter using the watch prescaler clear bit (WPCR:WCLR), modify the settings of other peripheral functions so that clearing the counter does not have any unexpected effect on them.

When the output of the watch prescaler is selected as the count clock, clearing the watch prescaler also clears the watchdog timer.

The watch prescaler is cleared not only by the watch prescaler clear bit (WPCR:WCLR) but also when the subclock or the sub-CR clock is stopped and the oscillation stabilization wait time is necessary. The watch prescaler is cleared in the following situations:

- The device transits from the subclock mode or sub-CR clock mode to the stop mode.
- The subclock oscillation enable bit or the sub-CR clock oscillation enable bit in the system clock control register 2 (SYCC2:SOSCE or SCRE) is set to "0" in main clock mode, main CR clock mode, or main CR PLL clock mode.

In addition, the counter of the watch prescaler is cleared and stops operating when a reset is generated.

9.4.3 Input Clock Selection for Watch Prescaler

Below are the clocks selected as input clocks of the watch prescaler in different clock modes.

- In main clock mode, main CR clock mode, and main CR PLL clock mode
  When the subclock oscillation is enabled and the subclock oscillation stabilization wait time elapses, the subclock is selected as the input clock of the watch prescaler.
  When the sub-CR clock oscillation is enabled and the sub-CR clock oscillation stabilization wait time elapses, the sub-CR clock is selected as the input clock of the watch prescaler.
  When the subclock oscillation and the sub-CR clock oscillation are enabled, and the oscillation stabilization wait time elapses, the subclock is selected as the input clock of the watch prescaler.
- In subclock mode
  Only the subclock is used as the input clock of the watch prescaler.
- In sub-CR clock mode
  Only the sub-CR clock is used as the input clock of the watch prescaler.

9.4.4 Operation Example of Watch Prescaler

Figure 9-2. shows an operation example under the following conditions:

1. When a power-on reset occurs
2. When the device transits to the sleep mode during the operation of the interval timer function in subclock mode or sub-CR clock mode
3. When the device transits to the stop mode during the operation of the interval timer function in subclock mode or sub-CR clock mode
4. When a request for clearing the counter is issued

The same operation is performed when changing to the watch mode as for when changing to the sleep mode.

Figure 9-2. Watch Prescaler Operation Example

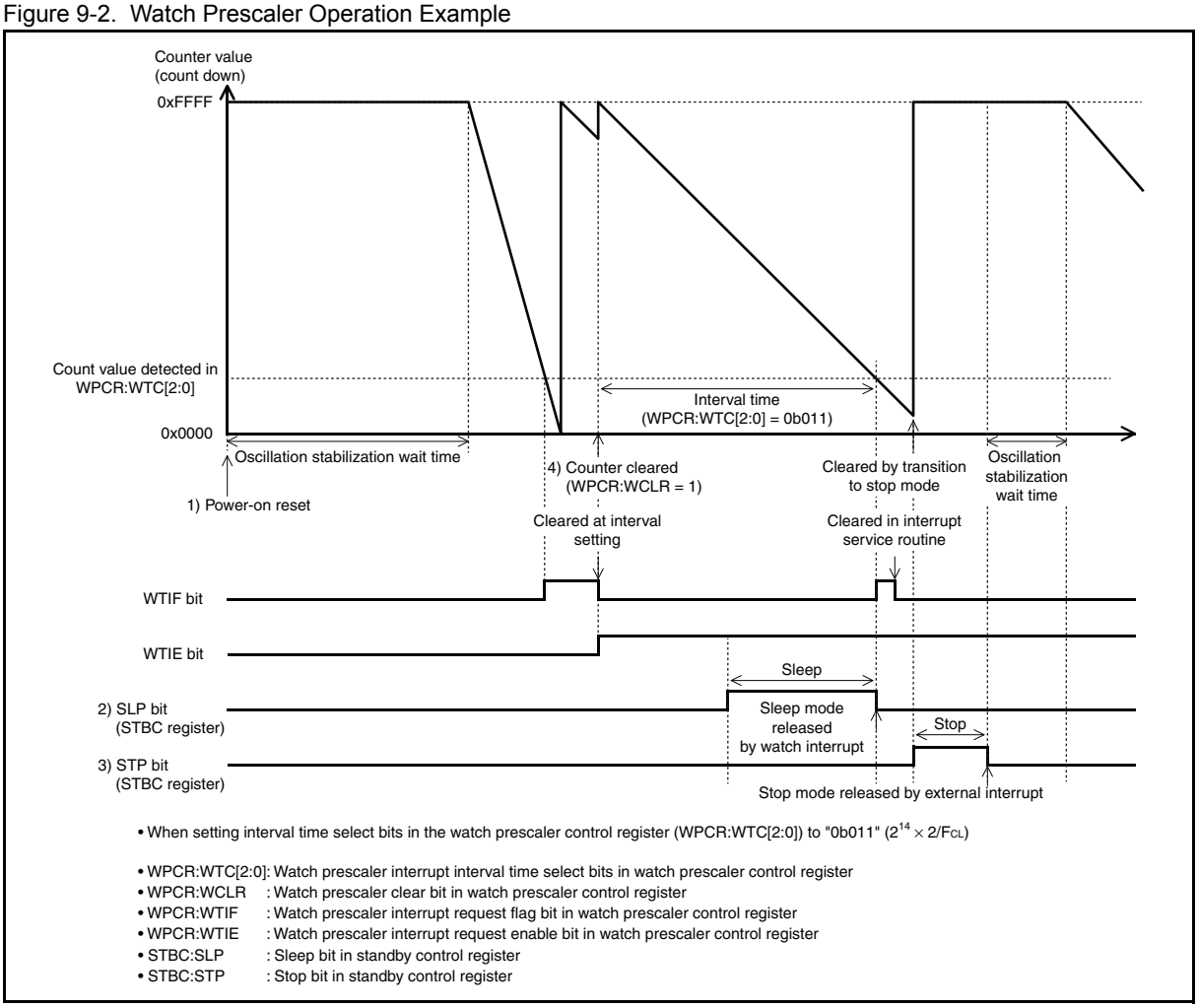

- When setting interval time select bits in the watch prescaler control register (WPCR:WTC[2:0]) to "0b011" ($2^{14} \times 2/F_{CL}$)

- WPCR:WTC[2:0]: Watch prescaler interrupt interval time select bits in watch prescaler control register
- WPCR:WCLR : Watch prescaler clear bit in watch prescaler control register
- WPCR:WTIF : Watch prescaler interrupt request flag bit in watch prescaler control register
- WPCR:WTIE : Watch prescaler interrupt request enable bit in watch prescaler control register
- STBC:SLP : Sleep bit in standby control register
- STBC:STP : Stop bit in standby control register

9.4.5 Setting Procedure Example

Below is an example of procedure for setting the watch prescaler.

- Initial settings

1. Set the interrupt level. (ILR*)
2. Set the interval time. (WPCR:WTC[2:0])
3. Enable interrupts and clear the interrupt request flag. (WPCR:WTIE = 1, WPCR:WTIF = 0)
4. Clear the counter. (WPCR:WCLR = 1)

*: For details of the interrupt level setting register (ILR), refer to Chapter 5.Interrupts in this hardware manual and "Interrupt Source Table" in the device data sheet.

- Processing interrupts

1. Clear the interrupt request flag. (WPCR:WTIF = 0)
2. Clear the counter. (WPCR:WCLR = 1)

9.5 Register

This section describes the register of the watch prescaler.

Table 9-3. List of Watch Prescaler Register

Register abbreviation	Register name	Reference
WPCR	Watch prescaler control register	9.5.1

9.5.1 Watch Prescaler Control Register (WPCR)

The watch prescaler control register (WPCR) is a register used to select the interval time, clear the counter, control interrupts and check the status of the watch prescaler.

Register Configuration

bit	7	6	5	4	3	2	1	0
Field	WTIF	WTIE	—	—	WTC2	WTC1	WTC0	WCLR
Attribute	R/W	R/W	—	—	R/W	R/W	R/W	W
Initial value	0	0	0	0	0	0	0	0

Register Functions

[bit7] WTIF: Watch prescaler interrupt request flag bit

This bit is set to "1" when the interval time selected by the watch prescaler has elapsed.

When this bit and the watch prescaler interrupt request enable bit (WTIE) are set to "1", a watch prescaler interrupt request is output.

When read by the read-modify-write (RMW) type of instruction, this bit always returns "1".

bit7	Details
Reading "0"	Indicates that the interval time has not elapsed.
Reading "1"	Indicates that the interval time has elapsed.
Writing "0"	Clears this bit.
Writing "1"	Has no effect on operation.

[bit6] WTIE: Watch prescaler interrupt request enable bit

This bit enables or disables output of interrupt requests to interrupt controller.

When this bit and the watch prescaler interrupt request flag bit (WTIF) are set to "1", a watch prescaler interrupt request is output.

bit6	Details
Writing "0"	Disables the watch prescaler interrupt request.
Writing "1"	Enables the watch prescaler interrupt request.

[bit5:4] Undefined bits

Their read values are always "0". Writing values to these bits has no effect on operation.

[bit3:1] WTC[2:0]: Watch prescaler interrupt interval time select bits

These bits select the interval time.

bit3:1	Details	
	Interval time (Subclock, F_{CL} = 32.768 kHz)	Interval time (Sub-CR clock, F_{CRL} = 100 kHz)
Writing "100"	$2^{10} \times 2/F_{CL}$ (62.5 ms)	$2^{10} \times 2/F_{CRL}$ (20.48 ms)
Writing "000"	$2^{11} \times 2/F_{CL}$ (125 ms)	$2^{11} \times 2/F_{CRL}$ (40.96 ms)
Writing "001"	$2^{12} \times 2/F_{CL}$ (250 ms)	$2^{12} \times 2/F_{CRL}$ (81.92 ms)
Writing "010"	$2^{13} \times 2/F_{CL}$ (500 ms)	$2^{13} \times 2/F_{CRL}$ (163.84 ms)
Writing "011"	$2^{14} \times 2/F_{CL}$ (1 s)	$2^{14} \times 2/F_{CRL}$ (327.68 ms)
Writing "101"	$2^{15} \times 2/F_{CL}$ (2 s)	$2^{15} \times 2/F_{CRL}$ (655.36 ms)
Writing "110"	$2^{16} \times 2/F_{CL}$ (4 s)	$2^{16} \times 2/F_{CRL}$ (1.311 s)
Writing "111"	$2^{17} \times 2/F_{CL}$ (8 s)	$2^{17} \times 2/F_{CRL}$ (2.621 s)

[bit0] WCLR: Watch prescaler clear bit

This bit clears all bits in the counter of the watch prescaler to "1".

bit0	Details
Read access	The read value is always "0".
Writing "0"	Has no effect on operation.
Writing "1"	Clears all bits in the counter of the watch prescaler to "1".

Note:

When the output of the watch prescaler is selected as the count clock of the software watchdog timer, clearing the watch prescaler with this bit also clears the software watchdog timer.

9.6 Notes on Using Watch Prescaler

This section provides notes on using the watch prescaler.

9.6.1 Notes on Using Watch Prescaler

- When setting interrupt processing in a program

The watch prescaler cannot be waken up from interrupt processing if the watch prescaler interrupt request flag bit (WPCR:WTIF) is set to "1" and the interrupt request is enabled (WPCR:WTIE = 1). Always clear the WTIF bit in the interrupt routine.

- Clearing the watch prescaler

When the watch prescaler is selected as the count clock of the software watchdog timer (WDTC:CS[1:0], CSP = 0b100 or 0b110), clearing the watch prescaler also clears the software watchdog timer.

- Watch prescaler interrupts

In stop mode in which the main clock, the main CR clock, or the main CR PLL clock is used, the watch prescaler performs counting, and can generate the watch prescaler interrupt.

- Peripheral functions receiving clock from the watch prescaler

If the counter of the watch prescaler is cleared when the output of the watch prescaler is used in other peripheral functions, the operations of such peripheral functions may be affected such as the changing of their operating cycles.

After the counter of the watch prescaler is cleared, the clock for the software watchdog timer output from the watch prescaler returns to the initial state. However, since the software watchdog timer counter is also cleared at the same time as the clock for the software watchdog timer returns to the initial state, the software watchdog timer operates in its normal cycle.

10. Watch Counter

This chapter describes the functions and operations of the watch counter.

10.1 Overview
10.2 Configuration
10.3 Interrupt
10.4 Operations and Setting Procedure Example
10.1 Registers
10.2 Notes on Using Watch Counter

10.1 Overview

The watch counter generates interrupt requests at intervals from 40.96 ms (min.) to 63 s (max.).

10.1.1 Function of Watch Counter

The watch counter performs counting for the number of times specified in the watch counter data register (WCDR) by using a selected count clock and generates an interrupt request. The count clock can be selected from eight types shown in Table 10-1.. The count value can be set to any number from "0" to "63". No interrupt request is generated when "0" is selected as the count value.

When the count clock is set to 1 s and the count value "60", an interrupt request is generated every one minute.

Table 10-1. Count Clock Types

	Count clock (Sub-CR clock) ($2^n \times 2/F_{CRL}$[1])	**Count clock (Subclock) ($2^n \times 2/F_{CL}$[2])**
n = 11	40.96 ms	125 ms
n = 12	81.92 ms	250 ms
n = 13	163.84 ms	500 ms
n = 14	327.68 ms	1 s

[1]: $2/F_{CRL}$ = 20 µs when F_{CRL} = 100 kHz
[2]: $2/F_{CL}$ = 61.035 µs when F_{CL} = 32.768 kHz

Note:

Refer to the device data sheet for the accuracy of the sub-CR clock frequency.

10.2 Configuration

The watch counter consists of the following blocks:

- Counter
- Watch counter control register (WCSR)
- Watch counter data register (WCDR)

10.2.1 Block Diagram of Watch Counter

Figure 10-1. Block Diagram of Watch Counter

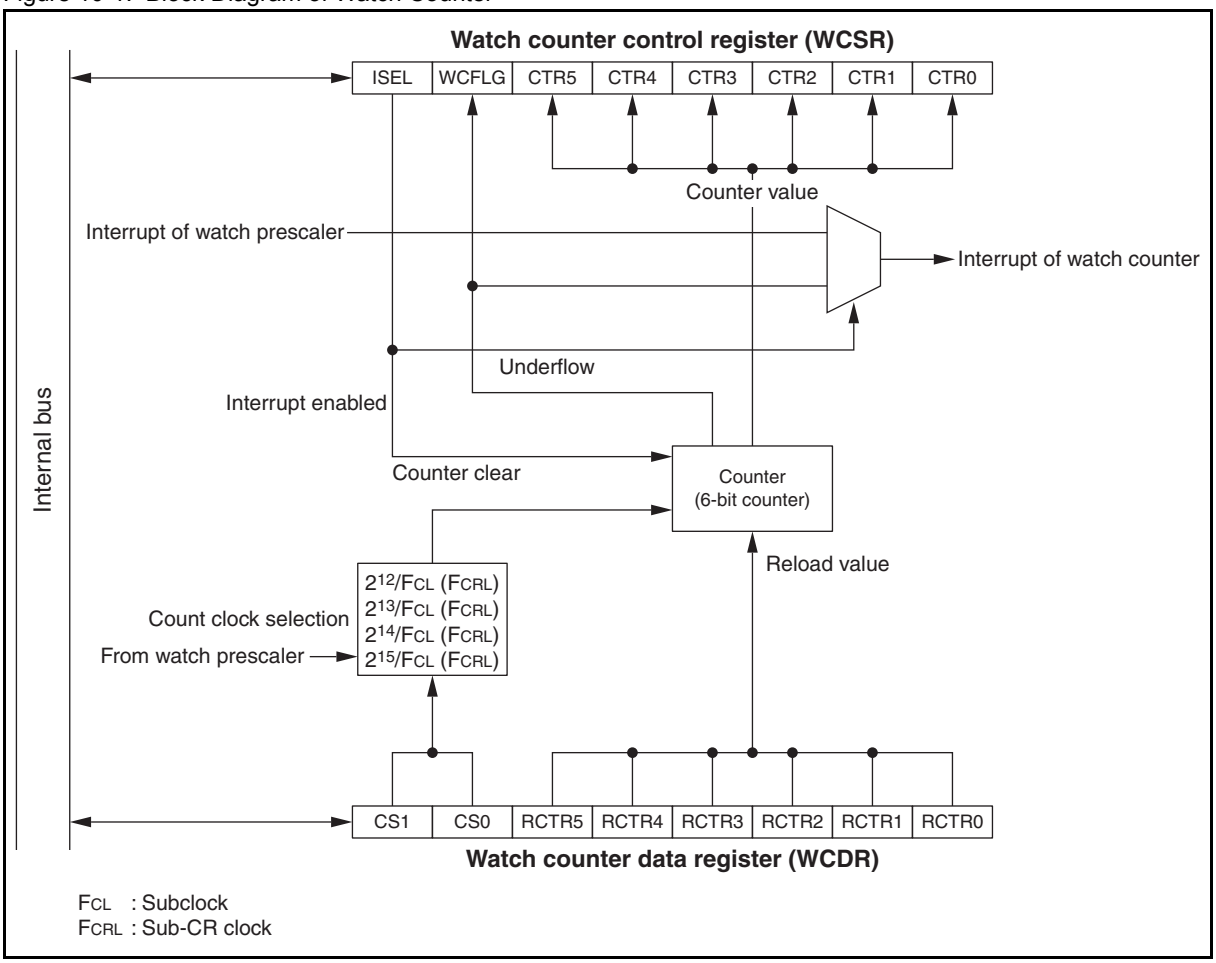

- Counter

This is a 6-bit downcounter using the output clock of the watch prescaler as its count clock.

- Watch counter control register (WCSR)

This register controls interrupts, checks interrupt status and reads the count value.

- Watch counter data register (WCDR)

This register selects the count clock and sets the counter reload value.

10.2.2 Input Clock

The watch counter uses the output clock of the watch prescaler as its input clock (count clock).

10.3 Interrupt

The watch counter outputs an interrupt request when the counter underflows (counter value = 0b000001).

10.3.1 Watch Counter Interrupt

When the counter of the watch counter underflows, the watch counter interrupt request flag bit (WCFLG) in the watch counter control register (WCSR) is set to "1". Provided that the watch counter start and interrupt request enable bit (ISEL) in the WCSR register has also been set to "1", the watch counter outputs an interrupt request to the interrupt controller.

Table 10-2 shows the interrupt control bits and interrupt sources of the watch counter.

Table 10-2. Interrupt Control Bits and Interrupt Sources of Watch Counter

Item	Details
Interrupt request flag bit	WCSR:WCFLG
Interrupt request enable bit	WCSR:ISEL
Interrupt source	Counter underflow

10.4 Operations and Setting Procedure Example

With the ISEL bit in the WCSR register set to "1", the watch counter counts down for the number of times specified as a count value in the RCTR[5:0] bits in the WCDR register with the count clock selected in the CS[1:0] bits in the WCDR register. When the counter underflows, the WCFLG bit in the WCSR register is set to "1", and the watch counter generates an interrupt request.

n Setup Procedure of Watch Counter

Below is the procedure for setting up the watch counter.

1. Select the count clock (CS[1:0]) and set the counter reload value (RCTR[5:0]).
2. Set the ISEL bit to "1" to start a down count and enable interrupts. In addition, disable interrupts of the watch prescaler.

The watch counter performs counting by using a divided clock (asynchronous) from the watch prescaler. An error of up to one count clock may occur at the beginning of a count cycle, depending on the time at which the ISEL bit is set to "1".

3. When the counter underflows, the WCFLG bit is set to "1", causing the watch counter to generate an interrupt request.
4. Write "0" to the WCFLG bit to clear it.
5. When the RCTR[5:0] bits are modified during counting, the reload value is updated at a reload occurring after the counter is set to "1".
6. When "0" is written to the ISEL bit, the counter becomes "0" and stops operating.

Figure 10-2. Watch Counter Operation

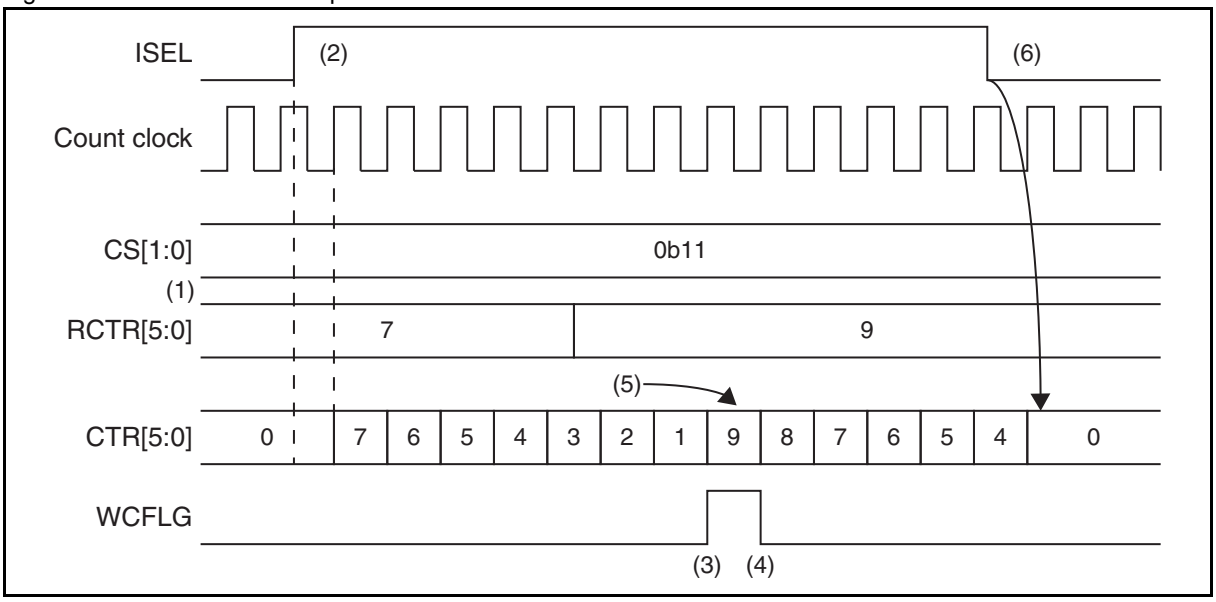

Note:

Before restarting the counter by setting the ISEL bit to "0" stop the counter, read the CTR[5:0] bits in the WCSR register twice and ensure that the CTR[5:0] bits have been cleared to "0b000000".

10.0.1 Operation in Substop Mode and Sub-CR Clock Stop Mode

When the device enters substop mode or sub-CR clock stop mode, the watch counter stops the count operation and the watch prescaler is also cleared. Therefore, the watch counter cannot count the correct value after the device exits substop mode or sub-CR clock stop mode. After the device exits substop mode or sub-CR clock stop mode, always write "0" to the ISEL bit in the WCSR register to clear the counter. In any other standby mode except the substop mode and sub-CR clock stop mode, the watch counter keeps operating.

10.0.2 Operation in Main Stop Mode and Main CR Clock Stop Mode

In main stop mode or main CR clock stop mode, though the watch counter continues the count operation, no interrupt is generated. The watch counter stops when the subclock oscillation enable bit (SOSCE) and sub-CR clock oscillation enable bit (SCRE) in the system clock control register 2 (SYCC2) are both set to "0".

10.0.3 Setting Procedure Example

Below is an example of procedure for setting the watch counter.

- Initial settings

1. Set the interrupt level. (ILR*)
2. Select the count clock. (WCDR:CS[1:0])
3. Set the counter reload value. (WCDR:RCTR[5:0])
4. Activate the watch counter and enable interrupts. (WCSR:ISEL = 1)

*: For details of the interrupt level setting register (ILR), refer to CHAPTER 5 INTERRUPTS in this hardware manual and "■ INTERRUPT SOURCE TABLE" in the device data sheet.

- Interrupt processing

1. Clear the interrupt request flag. (WCSR:WCFLG = 0)
2. Process any interrupt.

10.1 Registers

This section describes the registers of the watch counter.
Table 10-3. List of Watch Counter Registers

Register abbreviation	Register name	Reference
WCDR	Watch counter data register	10.1.1
WCSR	Watch counter control register	10.1.2

10.1.1 Watch Counter Data Register (WCDR)

The watch counter data register (WCDR) selects the count clock and sets the counter reload value.

Register Configuration

bit	7	6	5	4	3	2	1	0
Field	CS1	CS0	RCTR5	RCTR4	RCTR3	RCTR2	RCTR1	RCTR0
Attribute	R/W	R/W	R/W	R/W	R/W	R/W	R/W	R/W
Initial value	0	0	1	1	1	1	1	1

Register Functions

[bit7:6] CS[1:0]: Watch counter count clock select bits

These bits select the count clock of the watch counter.

Ensure that the ISEL bit in the WCSR register has been set to "0" before modifying these bits.

bit7:6	Details	
	Count clock (Subclock, F_{CL} = 32.768 kHz)	Count clock (Sub-CR clock, F_{CRL} = 100 kHz)
Writing "00"	212/FCL (125 ms)	212/FCRL (40.96 ms)
Writing "01"	213/FCL (250 ms)	213/FCRL (81.92 ms)
Writing "10"	214/FCL (500 ms)	214/FCRL (163.84 ms)
Writing "11"	215/FCL (1 s)	215/FCRL (327.68 ms)

[bit5:0] RCTR[5:0]: Watch counter counter reload value setting bits

These bits set the counter reload value.

When the counter reload value is modified during the count operation, the new value becomes effective at a reload after the counter underflows.

When the RCTR[5:0] bits are set to "0", no interrupt request is to be generated.

When the counter reload value is modified at the same time as an interrupt request is generated (WCSR:WCFLR = 1), the value to be reloaded is not correct. Therefore, modifying the counter reload value should be done before an interrupt request is generated, i.e. during the interrupt service routine or after the stopping of the watch counter (WCSR:ISEL = 0).

10.1.2 Watch Counter Control Register (WCSR)

The watch counter control register (WCSR) controls the watch counter operation and the interrupt of the watch counter, and reads the counter value.

Register Configuration

bit	7	6	5	4	3	2	1	0
Field	ISEL	WCFLG	CTR5	CTR4	CTR3	CTR2	CTR1	CTR0
Attribute	R/W	R/W	R	R	R	R	R	R
Initial value	0	0	0	0	0	0	0	0

Register Functions

[bit7] ISEL: Watch counter start and interrupt request enable bit

This bit starts the watch counter, and enables or disables the interrupt request of the watch counter and that of the watch prescaler.

Always disable the interrupt request of the watch prescaler before setting this bit to "1" to enable the interrupt request of the watch counter.

The watch counter counts with the asynchronous clock from the watch prescaler. Therefore, an error of up to one count clock may occur at the beginning of counting, depending on the time of setting the ISEL bit to "1".

bit7	Details
Writing "0"	Stops the watch counter and disables the interrupt request of the watch counter (enables the interrupt request of the watch prescaler).
Writing "1"	Starts the watch counter and enables the interrupt request of the watch counter (disables the interrupt request of the watch prescaler).

[bit6] WCFLG: Watch counter interrupt request flag bit

This bit is set to "1" when the counter underflows.

When this bit and the ISEL bit are both set to "1", a watch counter interrupt request is generated.

When read by the read-modify-write (RMW) type of instruction, this bit always returns "1".

bit6	Details
Reading "0"	Indicates that no watch counter interrupt request has been generated.
Reading "1"	Indicates that a watch counter interrupt request has been generated.
Writing "0"	Clears this bit.
Writing "1"	Has no effect on operation.

[bit5:0] CTR[5:0]: Watch counter counter read bits

These bits read the value of the counter that is counting.

While the counter value is being changed, the counter value that these bits read may not be correct. Therefore, before using the counter value these bits read, ensure that the counter reads the same value in times of reading by reading these bits twice.

Writing values to these bits has no effect on operation.

10.2 Notes on Using Watch Counter

This section provides notes on using the watch counter

- When the watch prescaler is cleared while the watch counter is running, the watch counter may not be able to run normally. Before clearing the watch prescaler, write "0" to the ISEL bit in the WCSR register to stop the watch counter.
- Before writing "1" to the ISEL bit to restart the watch counter after stopping it, read the CTR[5:0] bits in the WCSR register twice to ensure that the CTR[5:0] bits have been cleared to "0b000000".

11. Wild Register Function

This chapter describes the functions and operations of the wild register function.

11.1 Overview
11.2 Configuration
11.3 Operations
11.4 Registers
11.5 Typical Hardware Connection Example

11.1 Overview

The wild register function can be used to patch bugs in a program with addresses and amendment data, both of which are to be set in built-in registers.
This section describes the wild register function.

11.1.1 Wild Register Function

The wild register consists of three wild register data setting registers, three wild register address setting registers, a 1-byte address compare enable register and a 1-byte wild register data test setting register. If addresses and data that are to be modified are set to these registers, ROM data can be replaced with modification data set in the registers. Data of up to three different addresses can be modified.

The wild register function can be used to debug a program after creating the mask and to patch bugs in the program.

11.2 Configuration

The block diagram of the wild register is shown below. The wild register consists of the following blocks:

- Memory area block
  Wild register data setting register (WRDR0 to WRDR2)
  Wild register address setting register (WRAR0 to WRAR2)
  Wild register address compare enable register (WREN)
  Wild register data test setting register (WROR)
- Control circuit block

11.2.1 Block Diagram of Wild Register Function

Figure 11-1. Block Diagram of Wild Register Function

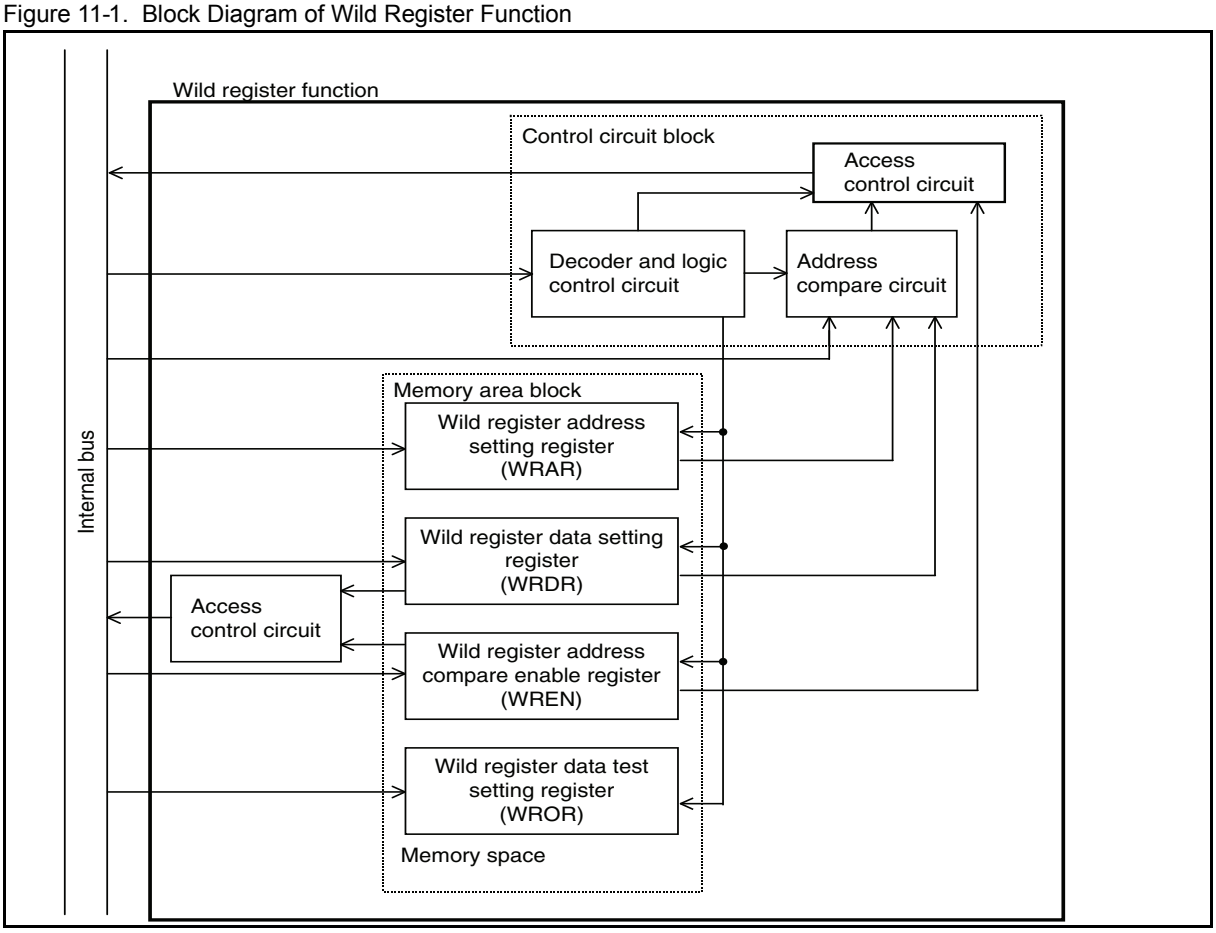

- Memory area block

The memory area block consists of the wild register data setting registers (WRDR), wild register address setting registers (WRAR), wild register address compare enable register (WREN) and wild register data test setting register (WROR). The wild register function is used to specify the addresses and data that need to be replaced. The wild register address compare enable register (WREN) enables the wild register function for each wild register data setting register (WRDR). In addition, the wild register data test setting register (WROR) enables the normal read function for each wild register data setting register (WRDR).

- Control circuit block

This circuit compares the actual address data with addresses set in the wild register address setting registers (WRAR). If they match, the circuit outputs the data from the wild register data setting register (WRDR) to the data bus. The operation of the control circuit block is controlled by the wild register address compare enable register (WREN).

11.3 Operations

This section describes the procedure for setting the wild register function.

11.3.1 Procedure for Setting Wild Register Function

Prepare a program that can read the value to be set in the wild register from external memory (e.g. EEPROM or FRAM) in the user program before using the wild register function. The setting method for the wild register is shown below.

This section does not include information on the method of communications between the external memory and the device.

- Write the address of the built-in ROM code that will be modified to the wild register address setting register (WRAR0 to WRAR2).
- Write a new code to the wild register data setting register (WRDR0 to WRDR2) corresponding to the wild register address setting register to which the address has been written.
- Write "1" to the EN bit in the wild register address compare enable register (WREN) corresponding to the wild register number to enable the wild register function represented by that wild register number.

Table 11-1 shows the procedure for setting the registers of the wild register function.

Table 11-1. Procedure for Setting Registers of Wild Register Function

Step	Operation	Operation example
1	Read replacement data from a peripheral function outside through a certain communication method.	Suppose the built-in ROM code to be modified is at the address 0xF011 and the data to be modified is "0xB5", and there are three built-in ROM codes to be modified.
2	Write the replacement address to a wild register address setting register (WRAR0 to WRAR2).	Set wild register address setting registers (WRAR0 = 0xF011, WRAR1 = ..., WRAR2 = ...).
3	Write a new ROM code (replacement for the built-in ROM code) to a wild register data setting register (WRDR0 to WRDR2).	Set the wild register data setting registers (WRDR0 = 0xB5, WRDR1 =..., WRDR2 =...).
4	Enable the EN bit in the wild register address compare enable register (WREN) corresponding to the wild register number of the wild register function used.	Setting bit 0 of the address compare enable register (WREN) to "1" enables the wild register function of the wild register number 0. If the address matches the value set in the wild register address setting register (WRAR), the value of the wild register data setting register (WRDR) will be replaced with the built-in ROM code. When replacing more than one built-in ROM code, enable the related EN bits in the wild register address compare enable register (WREN) corresponding to respective built-in ROM codes.

11.3.2 Wild Register Function Applicable Addresses

The wild register function can be applied to all address space except the address "0x0078".

Since the address "0x0078" is used as a mirror address for the register bank pointer and the direct bank pointer, this address cannot be patched.

11.4 Registers

This section describes the registers of the wild register function.

Table 11-2. List of Hardware/software Watchdog Timer Register

Register abbreviation	Register name	Reference
WRDR0	Wild register data setting register 0	11.4.1
WRDR1	Wild register data setting register 1	11.4.1
WRDR2	Wild register data setting register 2	11.4.1
WRAR0	Wild register address setting register 0	11.4.2
WRAR1	Wild register address setting register 1	11.4.2
WRAR2	Wild register address setting register 2	11.4.2
WREN	Wild register address compare enable register	11.4.3
WROR	Wild register data test setting register	11.4.4

Wild Register Number

A wild register number is assigned to each wild register address setting register (WRAR) and each wild register data setting register (WRDR).

Table 11-3. Wild Register Numbers Corresponding to Wild Register Address Setting Registers and Wild Register Data Setting Registers

Wild register number	Wild register address setting register (WRAR)	Wild register data setting register (WRDR)
0	WRAR0	WRDR0
1	WRAR1	WRDR1
2	WRAR2	WRDR2

11.4.1 Wild Register Data Setting Registers (WRDR0 to WRDR2)

The wild register data setting registers (WRDR0 to WRDR2) use the wild register function to specify the data to be amended.

Register Configuration

WRDR0

bit	7	6	5	4	3	2	1	0
Field	RD7	RD6	RD5	RD4	RD3	RD2	RD1	RD0
Attribute	R/W	R/W	R/W	R/W	R/W	R/W	R/W	R/W
Initial value	0	0	0	0	0	0	0	0

WRDR1

bit	7	6	5	4	3	2	1	0
Field	RD7	RD6	RD5	RD4	RD3	RD2	RD1	RD0
Attribute	R/W	R/W	R/W	R/W	R/W	R/W	R/W	R/W
Initial value	0	0	0	0	0	0	0	0

WRDR2

bit	7	6	5	4	3	2	1	0
Field	RD7	RD6	RD5	RD4	RD3	RD2	RD1	RD0
Attribute	R/W	R/W	R/W	R/W	R/W	R/W	R/W	R/W
Initial value	0	0	0	0	0	0	0	0

Register Functions

[bit7:0] RD[7:0]: Wild register data setting bits

These bits specify the data to be amended by the wild register function.
These bits are used to set the amendment data at the address assigned by the wild register address setting register (WRAR). Data is valid at an address corresponding to one of the wild register numbers.
The read access to one of these bits is enabled only when the data test setting bit in the wild register data test setting register (WROR) corresponding to the bit to be read is set to "1".

11.4.2 Wild Register Address Setting Registers (WRAR0 to WRAR2)

The wild register address setting registers (WRAR0 to WRAR2) set the address to be amended by the wild register function.

Register Configuration

WRAR0

bit	15	14	13	12	11	10	9	8
Field	RA15	RA14	RA13	RA12	RA11	RA10	RA9	RA8
Attribute	R/W	R/W	R/W	R/W	R/W	R/W	R/W	R/W
Initial value	0	0	0	0	0	0	0	0

bit	7	6	5	4	3	2	1	0
Field	RA7	RA6	RA5	RA4	RA3	RA2	RA1	RA0
Attribute	R/W	R/W	R/W	R/W	R/W	R/W	R/W	R/W
Initial value	0	0	0	0	0	0	0	0

WRAR1

bit	15	14	13	12	11	10	9	8
Field	RA15	RA14	RA13	RA12	RA11	RA10	RA9	RA8
Attribute	R/W	R/W	R/W	R/W	R/W	R/W	R/W	R/W
Initial value	0	0	0	0	0	0	0	0

bit	7	6	5	4	3	2	1	0
Field	RA7	RA6	RA5	RA4	RA3	RA2	RA1	RA0
Attribute	R/W	R/W	R/W	R/W	R/W	R/W	R/W	R/W
Initial value	0	0	0	0	0	0	0	0

WRAR2

bit	15	14	13	12	11	10	9	8
Field	RA15	RA14	RA13	RA12	RA11	RA10	RA9	RA8
Attribute	R/W	R/W	R/W	R/W	R/W	R/W	R/W	R/W
Initial value	0	0	0	0	0	0	0	0

bit	7	6	5	4	3	2	1	0
Field	RA7	RA6	RA5	RA4	RA3	RA2	RA1	RA0
Attribute	R/W	R/W	R/W	R/W	R/W	R/W	R/W	R/W
Initial value	0	0	0	0	0	0	0	0

Register Functions

[bit15:0] RA[15:0]: Wild register address setting bits

These bits set the address to be amended by the wild register function.
The address to be assigned to amendment data is set to these bits. The address is to be specified according to the wild register number corresponding to a wild register address setting register.

11.4.3 Wild Register Address Compare Enable Register (WREN)

The wild register address compare enable register (WREN) enables or disables the operations of wild register functions using their respective wild register numbers.

Register Configuration

bit	7	6	5	4	3	2	1	0
Field	—	—	Reserved	Reserved	Reserved	EN2	EN1	EN0
Attribute	—	—	W	W	W	R/W	R/W	R/W
Initial value	0	0	0	0	0	0	0	0

Register Functions

[bit7:6] Undefined bits

Their read values are always "0". Writing values to these bits has no effect on operation.

[bit5:3] Reserved bits

Always set these bits to "0".

[bit2:0] EN[2:0]: Wild register address compare enable bits

These bits enable or disable the operation of the wild register.

- EN0 corresponds to wild register number 0.
- EN1 corresponds to wild register number 1.
- EN2 corresponds to wild register number 2.

bit2/bit1/bit0	Details
Writing "0"	Disables the operation of the wild register function.
Writing "1"	Enables the operation of the wild register function.

11.4.4 Wild Register Data Test Setting Register (WROR)

The wild register data test setting register (WROR) enables or disables data reading from the corresponding wild register data setting register (WRDR0 to WRDR2).

Register Configuration

bit	7	6	5	4	3	2	1	0
Field	—	—	Reserved	Reserved	Reserved	DRR2	DRR1	DRR0
Attribute	—	—	W	W	W	R/W	R/W	R/W
Initial value	0	0	0	0	0	0	0	0

Register Functions

[bit7:6] Undefined bits

Their read values are always "0". Writing values to these bits has no effect on operation.

[bit5:3] Reserved bits

Always set these bits to "0".

[bit2:0] DRR[2:0]: Wild register data test setting bits

These bits enable or disable the normal reading from the corresponding data setting register of the wild register.

- DRR0 corresponds to wild register number 0.
- DRR1 corresponds to wild register number 1.
- DRR2 corresponds to wild register number 2.

bit2/bit1/bit0	Details
Writing "0"	Disables reading from the wild register data setting register.
Writing "1"	Enables reading from the wild register data setting register.

11.5 Typical Hardware Connection Example

Below is an example of typical hardware connection for the application of the wild register function.

11.5.1 Hardware Connection Example

Figure 11-2. Typical Hardware Connection Example

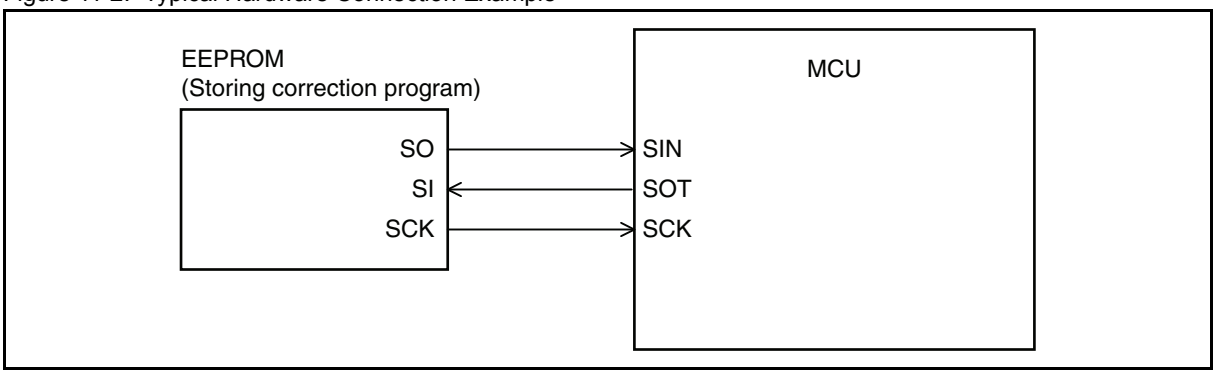

12. 8/16-bit Composite Timer

This chapter describes the functions and operations of the 8/16-bit composite timer.

12.1.Overview
12.2.Configuration
12.3.Channel
12.4.Pins
12.5.Interrupts
12.6.Operation of Interval Timer Function (One-shot Mode)
12.7.Operation of Interval Timer Function (Continuous Mode)
12.8.Operation of Interval Timer Function (Free-run Mode)
12.9.Operation of PWM Timer Function (Fixed-cycle Mode)
12.10.Operation of PWM Timer Function (Variable-cycle Mode)
12.11.Operation of PWC Timer Function
12.12.Operation of Input Capture Function
12.13.Operation of Noise Filter
12.14.Registers
12.15.Notes on Using 8/16-bit Composite Timer

12.1 Overview

The 8/16-bit composite timer consists of two 8-bit counters. It can be used as two 8-bit timers, or as a 16-bit timer if the two counters are connected in cascade.

The 8/16-bit composite timer has the following functions:

- Interval timer function
- PWM timer function
- PWC timer function (pulse width measurement)
- Input capture function

12.1.1 Interval Timer Function (One-shot Mode)

When the interval timer function (one-shot mode) is selected, the counter starts counting from "0x00" as the timer is started. When the counter value matches the value of the 8/16-bit composite timer data register, the timer output is inverted, an interrupt request occurs, and the counter stops counting.

12.1.2 Interval Timer Function (Continuous Mode)

When the interval timer function (continuous mode) is selected, the counter starts counting from "0x00" as the timer is started. When the counter value matches the value of the 8/16-bit composite timer data register, the timer output is inverted, an interrupt request occurs, and the counter counts from "0x00" again. The timer outputs square wave as a result of this repeated operation.

12.1.3 Interval Timer Function (Free-run Mode)

When the interval timer function (free-run mode) is selected, the counter starts counting from "0x00". When the counter value matches the value of the 8/16-bit composite timer data register, the timer output is inverted and an interrupt request occurs. Under these conditions, if the counter continues to count and reaches "0xFF", it restarts counting from "0x00". The timer outputs square wave as a result of this repeated operation.

12.1.4 PWM Timer Function (Fixed-cycle Mode)

When the PWM timer function (fixed-cycle mode) is selected, a PWM signal with a variable "H" pulse width is generated in fixed cycles. The cycle is fixed at "0xFF" in 8-bit operation or at "0xFFFF" in 16-bit operation. The time is determined by the count clock selected. The "H" pulse width is specified by setting a specific register.

12.1.5 PWM Timer Function (Variable-cycle Mode)

When the PWM timer function (variable-cycle mode) is selected, two 8-bit counters are used to generate an 8-bit PWM signal of variable cycle and duty depending on the cycle and "L" pulse width specified by registers.

In this operating mode, since the two 8-bit counters have to be used separately, the composite timer cannot operate as a 16-bit counter.

12.1.6 PWC Timer Function

When the PWC timer function is selected, the width and cycle of an external input pulse can be measured.

In this operating mode, the counter starts counting from "0x00" immediately after a count start edge of an external input signal is detected. Afterward, when a count end edge is detected, the counter transfers its value to a register to generate an interrupt.

12.1.7 Input Capture Function

When the input capture function is selected, the counter value is stored in a register immediately after the detection of an edge of an external input signal.

This function is available in either free-run mode or clear mode for count operation.

In clear mode, the counter starts counting from "0x00", and transfers its value to a register to generate an interrupt after an edge is detected. Afterward, the counter restarts counting from "0x00".

In free-run mode, the counter transfers its value to a register to generate an interrupt immediately after the detection of an edge. Afterward, unlike in clear mode, the counter continues to count without being cleared to "0x00".

12.2 Configuration

The 8/16-bit composite timer consists of the following blocks:

- 8-bit counter
- 8-bit comparator (including a temporary latch)
- 8/16-bit composite timer data register (Tn0DR/Tn1DR)
- 8/16-bit composite timer status control register 0 (Tn0CR0/Tn1CR0)
- 8/16-bit composite timer status control register 1 (Tn0CR1/Tn1CR1)
- 8/16-bit composite timer timer mode control register (TMCRn)
- Output controller
- Control logic
- Count clock selector
- Edge detector
- Noise filter

The number of pins and that of channels of the 8/16-bit composite timer vary among products. For details, refer to the device data sheet.

In this chapter, "n" in a pin name and a register abbreviation represents the channel number. For details of pin names, register names and register abbreviations of a product, refer to the device data sheet.

12.2.1 Block Diagram of 8/16-bit Composite Timer

Figure 12-1. Block Diagram of 8/16-bit Composite Timer

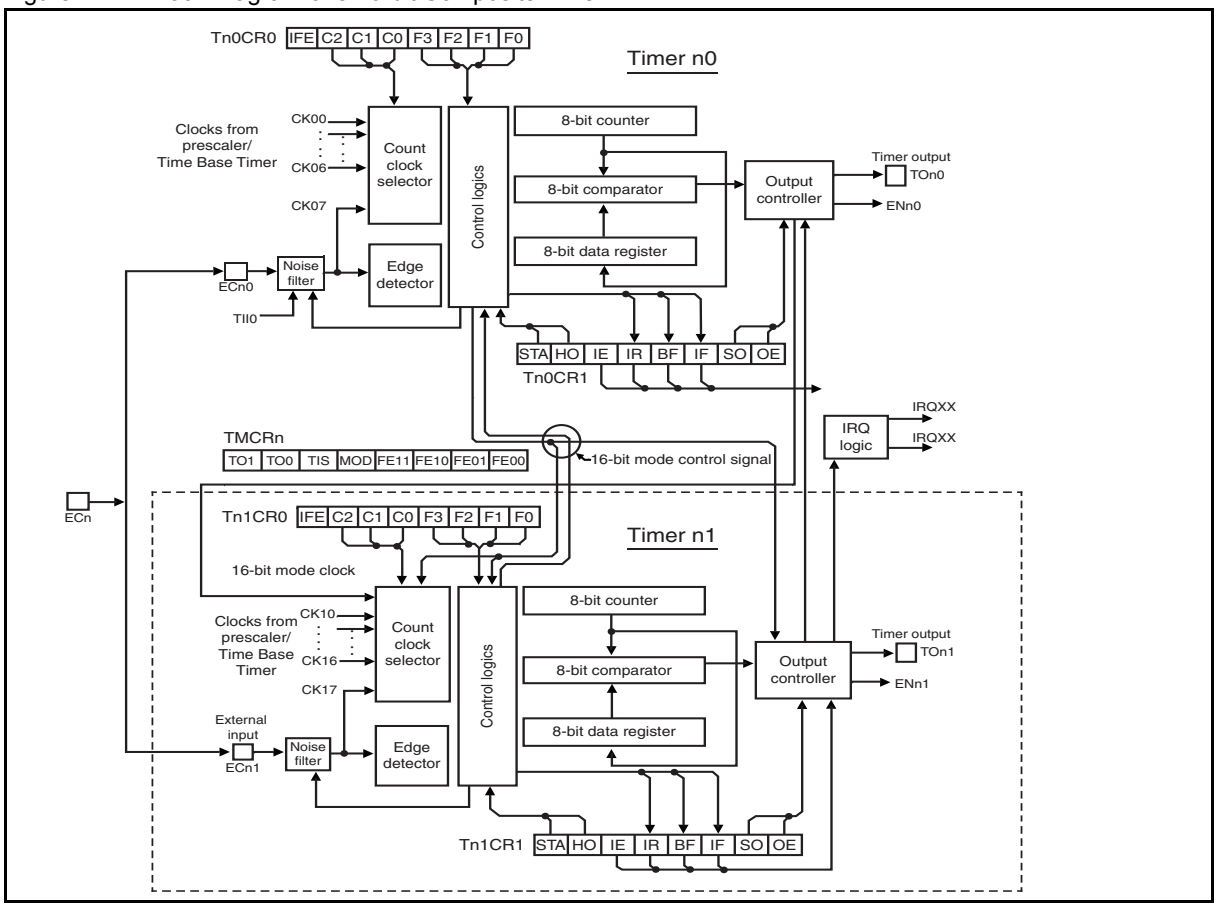

- 8-bit counter

This counter serves as the basis for various timer operations. It can be used either as two 8-bit counters or as a 16-bit counter.

- 8-bit comparator

The comparator compares the value in the 8/16-bit composite timer data register and that in the counter. It incorporates a latch that temporarily stores the 8/16-bit composite timer data register value.

- 8/16-bit composite timer data register (Tn0DR/Tn1DR)

These registers are used to write the maximum value counted during interval timer operation or PWM timer operation and to read the count value during PWC timer operation or input capture operation.

- 8/16-bit composite timer status control register 0 (Tn0CR0/Tn1CR0)

These registers are used to select the timer operating mode and the count clock, and to enable or disable IF flag interrupts.

- 8/16-bit composite timer status control register 1 (Tn0CR1/Tn1CR1)

These registers are used to control interrupt flags, timer output, and timer operation.

- 8/16-bit composite timer timer mode control register (TMCRn)

This register is used to select the noise filter function, 8-bit or16-bit operating mode, and signal input to timer n0/n1 and to indicate the timer output value.

- Output controller

The output controller controls timer output. The timer output is supplied to the external pin when the pin output has been enabled.

- Control logic

The control logic controls timer operation.

- Count clock selector

The selector selects the counter operating clock signal from different prescaler output signals (divided machine clock signal and time-base timer output signal).

- Edge detector

The edge detector selects the edge of an external input signal to be used as an event for PWC timer operation or input capture operation.

- Noise filter

This filter serves as a noise filter for external input signals. The filter function can be selected from "H" pulse noise elimination, "L" pulse noise elimination, and "H"/"L"-pulse noise elimination.

- TII0 internal pin (internally connected to the LIN-UART, only available on timer 00)

The TII0 pin serves as the signal input pin for timer 00. Nonetheless, it is connected to the LIN-UART inside the chip. For information about how to use the pin, see Chapter 15.LIN-UART. In addition, the TII0 pin for any timer other than timer 00 is internally fixed at "0".

12.2.2 Input Clock

The 8/16-bit composite timer uses the output clock from the prescaler as its input clock (count clock).

12.3 Channel

This section describes the channels of the 8/16-bit composite timer.

12.3.1 Channel of 8/16-bit Composite Timer

On a channel, there are two 8-bit counters. They can be used as two 8-bit timers or one 16-bit timer. The following table lists the external pins on a channel.

Table 12-1. External Pins of 8/16-bit Composite Timer

Pin name	Pin function
TOn0	Timer n0 output
TOn1	Timer n1 output
ECn	Timer n0 input and timer n1 input

12.4 Pins

This section describes the pins of the 8/16-bit composite timer.

12.4.1 Pins of 8/16-bit Composite Timer

The external pins of the 8/16-bit composite timer are TOn0, TOn1 and ECn. TII0 is for internal chip connection.

12.4.1.1 TOn0 pin

TOn0:

This pin serves as the timer output pin for timer n0 in 8-bit operation or for timers n0 and n1 in 16-bit operation. When the output is enabled (Tn0CR1:OE = 1) in the interval timer function, PWM timer function, or PWC timer function, this pin becomes an output pin automatically regardless of the port direction register (DDR) and functions as the timer output TOn0 pin.

The output becomes undetermined if output is enabled with the input capture function in use.

12.4.1.2 TOn1 pin

TOn1:

This pin serves as the timer output pin for timer n1 in 8-bit operation. When the output is enabled (Tn1CR1:OE = 1) in interval timer function, PWM timer function (fixed-cycle mode), or PWC timer function, the pin becomes an output pin automatically regardless of the port direction register (DDR) and functions as the timer output TOn1 pin.

In 16-bit operation, if output is enabled with the PWM timer function (variable-cycle mode) or input capture function in use, the output becomes undetermined.

12.4.1.3 ECn pin

The ECn pin is connected to the ECn0 and ECn1 internal pins.

ECn0 internal pin:

This pin serves as the external count clock input pin for timer n0 when the interval timer function or PWM timer function is selected, or as the signal input pin for timer n0 when the PWC timer function or input capture function is selected. The pin cannot be set to serve as the external count clock input pin when the PWC timer function or input capture function is selected.

To use the input function mentioned above, set the bit in the port direction register corresponding to ECn pin to "0" to make the pin as an input port.

ECn1 internal pin:

This pin serves as the external count clock input pin for timer n1 when the interval timer function or PWM timer function is selected, or as the signal input pin for timer n1 when the PWC timer function or input capture function is selected. The pin cannot be set to serve as the external count clock input pin when the PWC timer function or input capture function is selected.

In 16-bit operation, the input function of this pin is not used. If the PWM timer function (variable-cycle mode) is selected, the input function of this pin can also be used.

To use the input function mentioned above, set the bit in the port direction register corresponding to ECn pin to "0" to make the pin as an input port.

12.5 Interrupts

The 8/16-bit composite timer generates the following types of interrupts. An interrupt number and an interrupt vector are assigned to each type of interrupts.

- Timer n0 interrupt
- Timer n1 interrupt

12.5.1 Timer n0 Interrupt

Table 12-2 shows the timer n0 interrupt and its sources.

Table 12-2. Timer n0 Interrupt

Item	Description		
Interrupt generating source	Comparison match in the interval timer operation or the PWM timer operation (variable-cycle mode)	Overflow in the PWC timer operation or the input capture operation	Completion of measurement in the PWC timer operation or edge detection in the input capture operation
Interrupt flag	Tn0CR1:IF	Tn0CR1:IF	Tn0CR1:IR
Interrupt enable	Tn0CR1:IE and Tn0CR0:IFE	Tn0CR1:IE and Tn0CR0:IFE	Tn0CR1:IE

12.5.2 Timer n1 Interrupt

Table 12-3 shows the timer n1 interrupt and its sources.

Table 12-3. Timer n1 Interrupt

Item	Description		
Interrupt generating source	Comparison match in the interval timer operation or the PWM timer operation (variable-cycle mode), except in 16-bit operation	Overflow in the PWC timer operation or the input capture operation, except in 16-bit operation	Completion of measurement in the PWC timer operation or edge detection in the input capture operation, except in 16-bit operation
Interrupt flag	Tn1CR1:IF	Tn1CR1:IF	Tn1CR1:IR
Interrupt enable	Tn1CR1:IE and Tn1CR0:IFE	Tn1CR1:IE and Tn1CR0:IFE	Tn1CR1:IE

12.6 Operation of Interval Timer Function (One-shot Mode)

This section describes the operation of the interval timer function (one-shot mode) of the 8/16-bit composite timer.

12.6.1 Operation of Interval Timer Function (One-shot Mode)

To use the interval timer function (one-shot mode), do the settings shown in Figure 12-2..

Figure 12-2. Settings of Interval Timer Function (One-shot Mode)

	bit7	bit6	bit5	bit4	bit3	bit2	bit1	bit0
Tn0CR0/Tn1CR0	IFE	C2	C1	C0	F3	F2	F1	F0
	❍	❍	❍	❍	0	0	0	0
Tn0CR1/Tn1CR1	STA	HO	IE	IR	BF	IF	SO	OE
	1	❍	❍	×	×	❍	❍	❍
TMCRn	TO1	TO0	TIS	MOD	FE11	FE10	FE01	FE00
	❍	❍	×	❍	❍	❍	❍	❍
Tn0DR/Tn1DR	Sets interval time (counter compare value)							

❍: Used bit

×: Unused bit

1: Set to "1"

0: Set to "0"

As for the interval timer function (one-shot mode), enabling timer operation (Tn0CR1/Tn1CR1:STA = 1) causes the counter to start counting from "0x00" at the rising edge of a selected count clock signal. When the counter value matches the value of the 8/16-bit composite timer data register (Tn0DR/Tn1DR), the timer output (TMCRn:TO0/TO1) is inverted, the interrupt flag (Tn0CR1/Tn1CR1:IF) is set to "1", the timer operation enable bit (Tn0CR1/Tn1CR1:STA) is set to "0", and the counter stops counting.

The value of the 8/16-bit composite timer data register (Tn0DR/Tn1DR) is transferred to the temporary storage latch (comparison data storage latch) in the comparator when the counter starts counting. Do not write "0x00" to the 8/16-bit composite timer data register.

Figure 12-3 shows the operation of the interval timer function in 8-bit operation.

Figure 12-3. Operation of Interval Timer Function in 8-bit Operation (One-shot Mode)

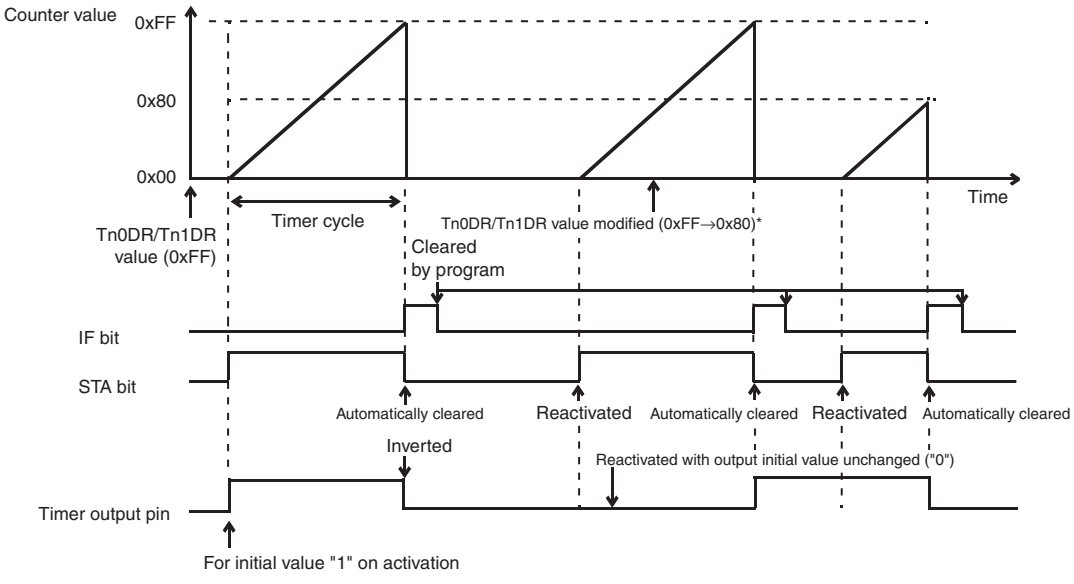

*: If the Tn0DR/Tn1DR data register value is modified during operation, the new value is used from the next active cycle.

12.7 Operation of Interval Timer Function (Continuous Mode)

This section describes the interval timer function (continuous mode operation) of the 8/16-bit composite timer.

12.7.1 Operation of Interval Timer Function (Continuous Mode)

To use interval timer function (continuous mode), do the settings shown in Figure 12-4.

Figure 12-4. Settings for Interval Timer Function (Continuous Mode)

	bit7	bit6	bit5	bit4	bit3	bit2	bit1	bit0
Tn0CR0/Tn1CR0	IFE	C2	C1	C0	F3	F2	F1	F0
	❍	❍	❍	❍	0	0	0	1
Tn0CR1/Tn1CR1	STA	HO	IE	IR	BF	IF	SO	OE
	1	❍	❍	×	×	m	❍	❍
TMCRn	TO1	TO0	TIS	MOD	FE11	FE10	FE01	FE00
	❍	❍	×	❍	❍	❍	❍	❍
Tn0DR/Tn1DR	Sets interval time (counter compare value)							

❍: Bit to be used

×: Unused bit

1: Set to "1"

0: Set to "0"

As for the interval timer function (continuous mode), enabling timer operation (Tn0CR1/Tn1CR1:STA = 1) causes the counter to start counting from "0x00" at the rising edge of a selected count clock signal. When the counter value matches the value in the 8/16-bit composite timer data register (Tn0DR/Tn1DR), the timer output bit (TMCRn:TO0/TO1) is inverted, the interrupt flag (Tn0CR1/Tn1CR1:IF) is set to "1", and the counter returns to "0x00" and restarts counting. The timer outputs square wave as a result of this continuous operation.

The value of the 8/16-bit composite timer data register (Tn0DR/Tn1DR) is transferred to the temporary storage latch (comparison data storage latch) in the comparator either when the counter starts counting or when a counter value comparison match is detected. Do not write "0x00" to the 8/16-bit composite timer data register while the counter is counting.

When the timer stops operating, the timer output bit (TMCRn:TO0/TO1) holds the last value.

Figure 12-5. Operation Diagram of Interval Timer Function (Continuous Mode)

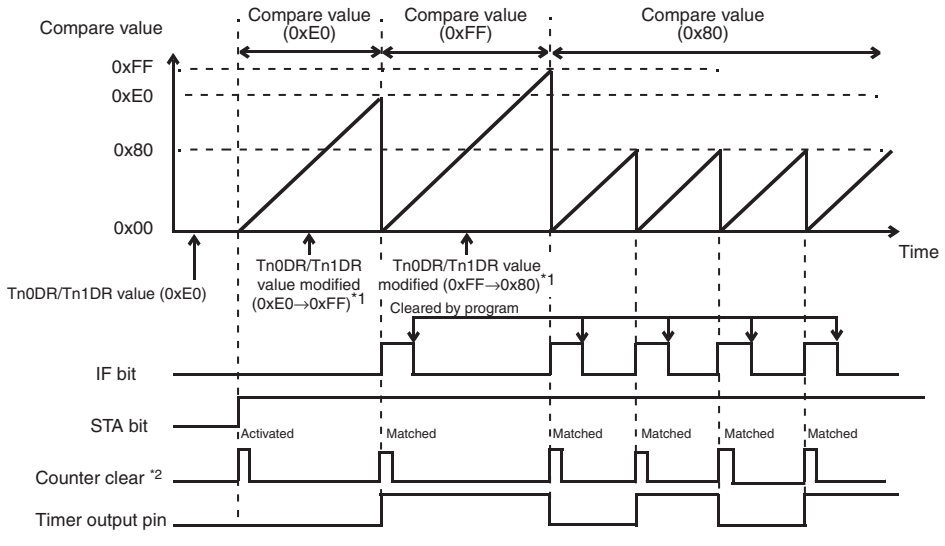

*1: If the Tn0DR/Tn1DR data register value is modified during operation, the new value is used from the next active cycle.

*2: The counter is cleared and the data register settings are loaded into the comparison data latch whenever a match is detected during operation.

12.8 Operation of Interval Timer Function (Free-run Mode)

This section describes the operation of the interval timer function (free-run mode) of the 8/16-bit composite timer.

12.8.1 Operation of Interval Timer Function (Free-run Mode)

To use the interval timer function (free-run mode), do the settings shown in Figure 12-6.

Figure 12-6. Settings for Interval Timer Function (Free-run Mode)

	bit7	bit6	bit5	bit4	bit3	bit2	bit1	bit0
Tn0CR0/Tn1CR0	IFE	C2	C1	C0	F3	F2	F1	F0
	❍	❍	❍	❍	0	0	1	0
Tn0CR1/Tn1CR1	STA	HO	IE	IR	BF	IF	SO	OE
	1	❍	❍	×	×	❍	❍	❍
TMCRn	TO1	TO0	TIS	MOD	FE11	FE10	FE01	FE00
	❍	❍	×	❍	❍	❍	❍	❍
Tn0DR/Tn1DR	Sets interval time (counter compare value)							

❍: Bit to be used

×: Unused bit

1: Set to "1"

0: Set to "0"

As for the interval timer function (free-run mode), enabling timer operation (Tn0CR1/Tn1CR1:STA = 1) causes the counter to start counting from "0x00" at the rising edge of a selected count clock signal. When the counter value matches the value in the 8/16-bit composite timer data register (Tn0DR/Tn1DR), the timer output bit (TMCRn:TO0/TO1) is inverted and the interrupt flag (Tn0CR1/Tn1CR1:IF) is set to "1". If the counter continues to count with the above settings and then reaches "0xFF", it returns to "0x00" and restarts counting. The timer outputs square wave as a result of this continuous operation.

The value of the 8/16-bit composite timer data register (Tn0DR/Tn1DR) is transferred to the temporary storage latch (comparison data storage latch) in the comparator either when the counter starts counting or when a counter value comparison match is detected. Do not write "0x00" to the 8/16-bit composite timer data register.

When the timer stops operation, the timer output bit (TMCRn:TO0/TO1) holds the last value.

Figure 12-7. Operation Diagram of Interval Timer Function (Free-run Mode)

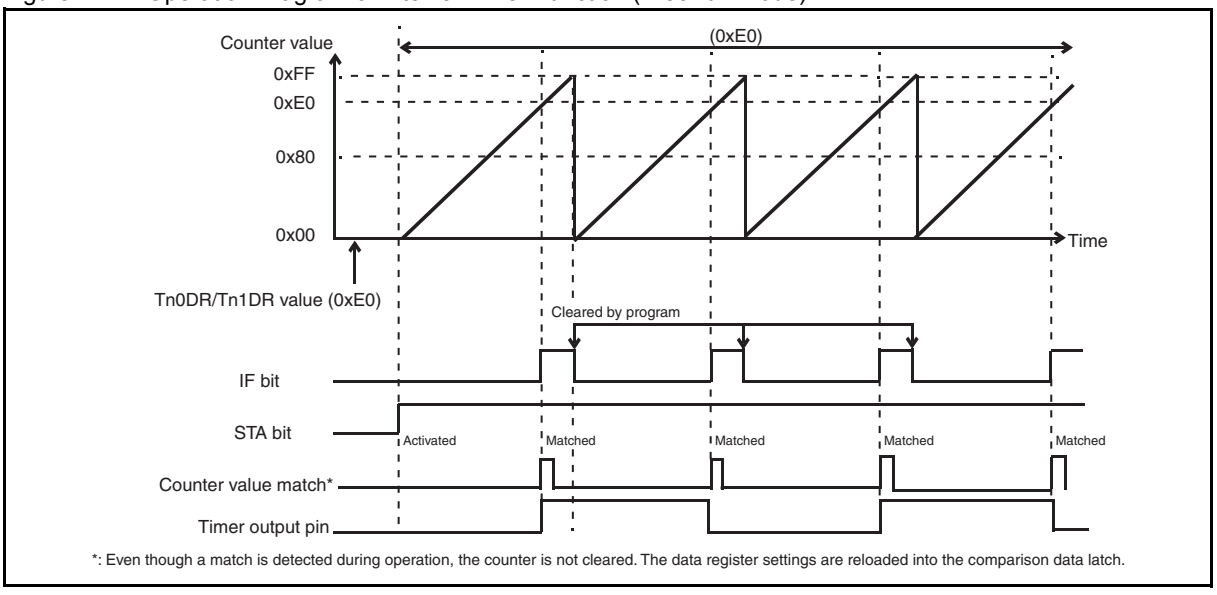

12.9 Operation of PWM Timer Function (Fixed-cycle Mode)

This section describes the operation of the PWM timer function (fixed-cycle mode) of the 8/16-bit composite timer.

12.9.1 Operation of PWM Timer Function (Fixed-cycle Mode)

To use the PWM timer function (fixed-cycle mode), do the settings shown in Figure 12-8.

Figure 12-8. Settings for PWM Timer Function (Fixed-cycle Mode)

	bit7	bit6	bit5	bit4	bit3	bit2	bit1	bit0
Tn0CR0/Tn1CR0	IFE	C2	C1	C0	F3	F2	F1	F0
	×	❍	❍	❍	0	0	1	1
Tn0CR1/Tn1CR1	STA	HO	IE	IR	BF	IF	SO	OE
	❍	❍	×	×	×	×	×	❍
TMCRn	TO1	TO0	TIS	MOD	FE11	FE10	FE01	FE00
	❍	❍	×	❍	❍	❍	❍	❍
Tn0DR/Tn1DR	Sets "H" pulse width (compare value)							

❍: Bit to be used

×: Unused bit

1: Set to "1"

0: Set to "0"

As for the PWM timer function (fixed-cycle mode), PWM signal that has a fixed cycle and variable "H" pulse width is output from the timer output pin (TOn0/TOn1). The cycle is fixed at "0xFF" in 8-bit operation or "0xFFFF" in 16-bit operation. The time is determined by the count clock selected. The "H" pulse width is specified by the value in the 8/16-bit composite timer data register (Tn0DR/Tn1DR).

This function has no effect on the interrupt flag (Tn0CR1/Tn1CR1:IF). Since each cycle always starts with "H" pulse output, the timer output initial value setting bit (Tn0CR1/Tn1CR1:SO) has no effect on operation.

The value of the 8/16-bit composite timer data register (Tn0DR/Tn1DR) is transferred to the temporary storage latch (comparison data storage latch) in the comparator either when the counter starts counting or when a counter value comparison match is detected.

When the timer stops operation, the timer output bit (TMCRn:TO0/TO1) holds the last value.

In the output waveform immediately after activation of the timer (write "1" to the STA bit), the "H" pulse is one count clock shorter than the value set in the Tn0DR/Tn1DR register.

Figure 12-9. Operation Diagram of PWM Timer Function (Fixed-cycle Mode)

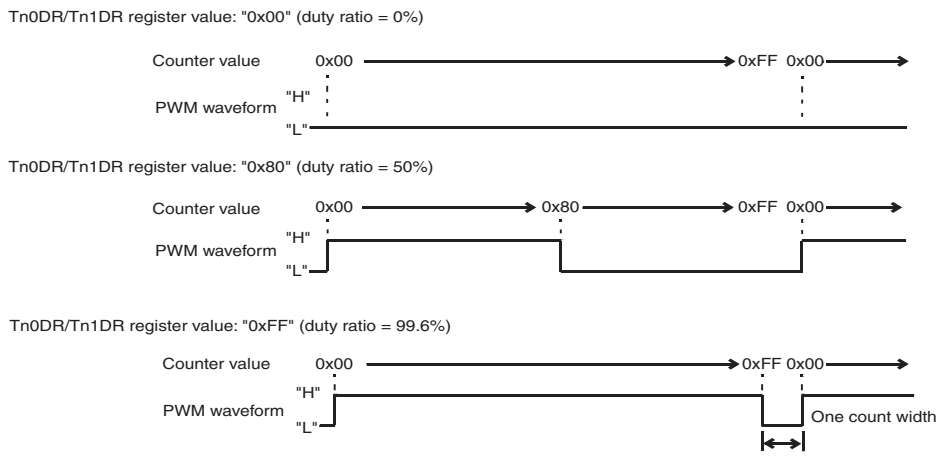

Note: When the PWM function has been selected, the timer output pin holds the level at the point when the counter stops (Tn0CR1/Tn1CR1:STA = 0).

12.10 Operation of PWM Timer Function (Variable-cycle Mode)

This section describes the operation of the PWM timer function (variable-cycle mode) of the 8/16-bit composite timer.

12.10.1 Operation of PWM Timer Function (Variable-cycle Mode)

To use the PWM timer function (variable-cycle mode), do the settings shown in Figure 12-10.

Figure 12-10. Settings for PWM Timer Function (Variable-cycle Mode)

	bit7	bit6	bit5	bit4	bit3	bit2	bit1	bit0
Tn0CR0/Tn1CR0	IFE	C2	C1	C0	F3	F2	F1	F0
	❍	❍	❍	❍	0	1	0	0
Tn0CR1/Tn1CR1	STA	HO	IE	IR	BF	IF	SO	OE
	1	❍	❍	×	×	❍	×	×
TMCRn	TO1	TO0	TIS	MOD	FE11	FE10	FE01	FE00
	❍	❍	×	×	❍	❍	❍	❍
Tn0DR	Sets "L" pulse width (compare value)							
Tn1DR	Sets the cycle of PWM waveform (compare value)							

❍: Bit to be used
×: Unused bit
1: Set to "1"
0: Set to "0"

As for the PWM timer function (variable-cycle mode), both timers n0 and n1 are used. PWM signal of any cycle and of any duty is output from the timer output pin (TOn0). The cycle is specified by the 8/16-bit composite timer n1 data register (Tn1DR), and the "L" pulse width is specified by the 8/16-bit composite timer n0 data register (Tn0DR).

Since both the 8-bit counters are used for this function, the composite timer cannot form a 16-bit counter.

Enabling timer operation (Tn0CR1/Tn1CR1:STA = 1) sets the mode bit (TMCRn:MOD) to "0". As the first cycle always begins with "L" pulse output, the timer initial value setting bit (Tn0CR1/Tn1CR1:SO) has no effect on operation.

An interrupt flag (Tn0CR1/Tn1CR1:IF) is set when the 8-bit counter corresponding to that interrupt flag matches the value in its corresponding 8/16-bit composite timer data register (Tn0DR/Tn1DR).

The 8/16-bit composite timer data register value is transferred to the temporary storage latch (comparison data storage latch) in the comparator either when the counter starts counting or when a comparison match with each counter value is detected.

"H" is not output when the "L" pulse width setting value is greater than the cycle setting value.

The count clock must be selected for both timers n0 and n1. Selecting different count clocks for the two timers is prohibited.

When the timer stops operating, the timer output bit (TMCRn:TO0) holds the last output value.

If the 8/16-bit composite timer data register is modified during operation, the data written will become valid from the cycle immediately after the detection of a synchronous match.

Figure 12-11. Operation Diagram of PWM Timer Function (Variable-cycle Mode)

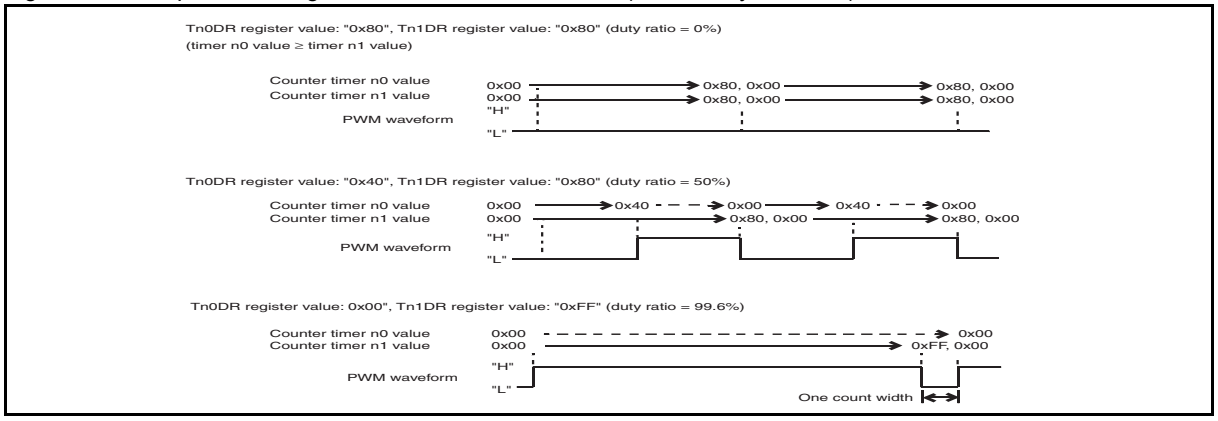

12.11 Operation of PWC Timer Function

This section describes the operation of the PWC timer function of the 8/16-bit composite timer.

12.11.1 Operation of PWC Timer Function

To use the PWC timer function, do the settings shown in Figure 12-12.

Figure 12-12. Settings for PWC Timer Function

	bit7	bit6	bit5	bit4	bit3	bit2	bit1	bit0
Tn0CR0/Tn1CR0	IFE	C2	C1	C0	F3	F2	F1	F0
	❍	❍	❍	❍	❍	❍	❍	❍
Tn0CR1/Tn1CR1	STA	HO	IE	IR	BF	IF	SO	OE
	1	❍	❍	❍	❍	❍	❍	×
TMCRn	TO1	TO0	TIS	MOD	FE11	FE10	FE01	FE00
	❍	❍	❍	❍	❍	❍	❍	❍
Tn0DR/Tn1DR	Holds pulse width measurement value							

❍: Bit to be used

×: Unused bit

1: Set to "1"

When the PWC timer function is selected, the width and cycle of an external input pulse can be measured. The edges at which counting starts and ends are selected by the timer operating mode select bits (Tn0CR0/Tn1CR0:F[3:0]).

In the operation of this function, the counter starts counting from "0x00" immediately after a specified count start edge of an external input signal is detected. Upon the detection of a specified count end edge, the count value is transferred to the 8/16-bit composite timer data register (Tn0DR/Tn1DR), and the interrupt flag (Tn0CR1/Tn1CR1:IR) and the buffer full flag (Tn0CR1/Tn1CR1:BF) are set to "1". The buffer full flag is set to "0" when the 8/16-bit composite timer data register (Tn0DR/Tn1DR) is read.

If the buffer full flag is set to "1", the 8/16-bit composite timer data register holds data. Even if the next edge is detected during that time, the next measurement result is lost since the count value has not been transferred to the 8/16-bit composite timer data register.

There is an exception. With the F3 bit to F0 bit in the Tn0CR0/Tn1CR0 register having been set to "1001_B", even though the BF bit is set to "1", the "H" pulse measurement result is transferred to the 8/16-bit composite timer data register, while the cycle measurement result is not transferred to the 8/16-bit composite timer data register. Therefore, in order to perform cycle measurement, the "H" pulse measurement result must be read before a cycle is completed. In addition, the result of "H" pulse measurement and that of cycle measurement are lost if they are not read before the completion of the next "H" pulse.

The time exceeding the range of the counter can be measured by counting the number of counter overflows using the software. When the counter overflows, the interrupt flag (Tn0CR1/Tn1CR1:IF) is set to "1". The interrupt service routine can therefore be used to count the number of overflows. In addition, the timer output is inverted due to the overflow. The timer output initial value can be set by the timer output initial value bit (Tn0CR1/Tn1CR1:SO).

When the timer stops operating, the timer output bit (TMCRn:TO1/TO0) holds the last value.

Figure 12-13. Operation Diagram of PWC Timer (Example of H-pulse Width Measurement)

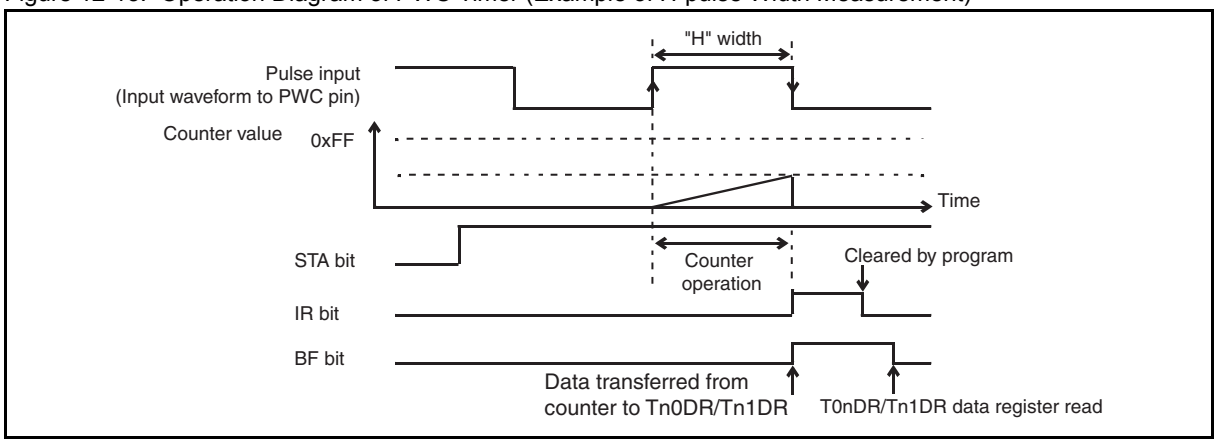

12.12 Operation of Input Capture Function

This section describes the operation of the input capture function of the 8/16-bit composite timer.

12.12.1 Operation of Input Capture Function

To use the input capture function, do the settings shown in Figure 12-14.

Figure 12-14. Settings for Input Capture Function

	bit7	bit6	bit5	bit4	bit3	bit2	bit1	bit0
Tn0CR0/Tn1CR0	IFE	C2	C1	C0	F3	F2	F1	F0
	❍	❍	❍	❍	❍	❍	❍	❍
Tn0CR1/Tn1CR1	STA	HO	IE	IR	BF	IF	SO	OE
	1	❍	❍	❍	×	❍	×	×
TMCRn	TO1	TO0	TIS	MOD	FE11	FE10	FE01	FE00
	×	×	❍	❍	❍	❍	❍	❍
Tn0DR/Tn1DR	Holds pulse width measurement value							

❍: Bit to be used

×: Unused bit

1: Set to "1"

When the input capture function is selected, the counter value is stored to the 8/16-bit composite timer data register (Tn0DR/Tn1DR) immediately after an edge of the external signal input is detected. The target edge to be detected is selected by the timer operating mode select bits (Tn0CR0/Tn1CR0:F[3:0]).

This function is available in free-run mode and clear mode, which can be selected by the timer operating mode select bits.

In clear mode, the counter starts counting from "0x00". When an edge is detected, the counter value is transferred to the 8/16-bit composite timer data register (Tn0DR/Tn1DR), the interrupt flag (Tn0CR1/Tn1CR1:IR) is set to "1", and the counter returns to "0x00" and restarts counting.

In free-run mode, when an edge is detected, the counter value is transferred to the 8/16-bit composite timer data register (Tn0DR/Tn1DR) and the interrupt flag (Tn0CR1/Tn1CR1:IR) is set to "1". In this case, the counter continues to count without being cleared.

This function has no effect on the buffer full flag (Tn0CR1/Tn1CR1:BF).

The time exceeding the range of the counter can be measured by counting the number of counter overflows using the software. When the counter overflows, the interrupt flag (Tn0CR1/Tn1CR1:IF) is set to "1". The interrupt service routine can therefore be used to count the number of overflows. In addition, the timer output is inverted due to the overflow. The timer output initial value can be set by the timer output initial value bit (Tn0CR1/Tn1CR1:SO).

Note:

See 12.15.Notes on Using 8/16-bit Composite Timer for notes on using the input capture function.

Figure 12-15. Operating Diagram of Input Capture Function

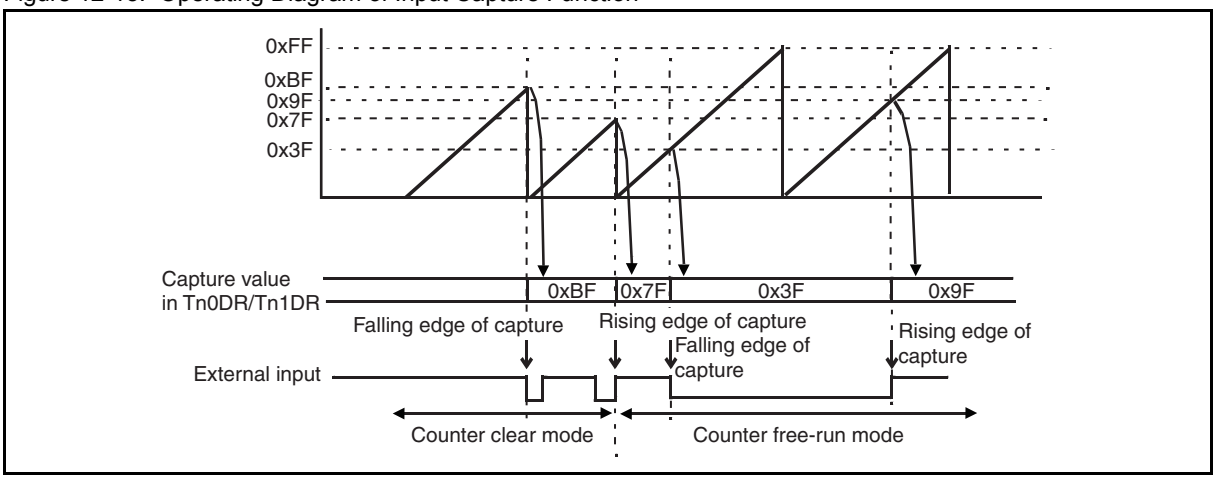

12.13 Operation of Noise Filter

This section describes the operation of the noise filter of the 8/16-bit composite timer.

When the input capture function or PWC timer function is selected, a noise filter can be used to eliminate the pulse noise of the signal from the external input pin (ECn). H-pulse noise, L-pulse noise, or H/L-pulse noise elimination can be selected by the FE11, FE10, FE01 and FE00 bits in the TMCRn register. The maximum pulse width that can be eliminated is three machine clock cycles. If the noise filter function is activated, the signal input will be delayed for four machine clock cycles.

Figure 12-16. Operation of Noise Filter

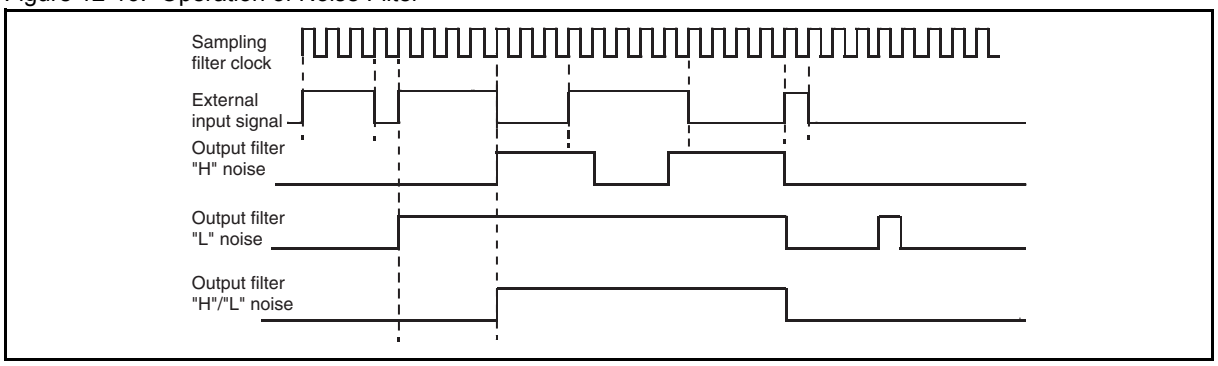

12.14 Registers

This section describes the registers of the 8/16-bit composite timer.

Table 12-4. List of 8/16-bit Composite Timer Registers

Register abbreviation	Register name	Reference
Tn0CR0	8/16-bit composite timer n0 status control register 0	12.14.1
Tn1CR0	8/16-bit composite timer n1 status control register 0	12.14.1
Tn0CR1	8/16-bit composite timer n0 status control register 1	12.14.2
Tn1CR1	8/16-bit composite timer n1 status control register 1	12.14.2
TMCRn	8/16-bit composite timer timer mode control register	12.14.3
Tn0DR	8/16-bit composite timer n0 data register	12.14.4
Tn1DR	8/16-bit composite timer n1 data register	12.14.4

12.14.1 8/16-bit Composite Timer Status Control Register 0 (Tn0CR0/Tn1CR0)

The 8/16-bit composite timer status control register 0 (Tn0CR0/Tn1CR0) selects the timer operation mode, selects the count clock, and enables or disables IF flag interrupts. The Tn0CR0 and Tn1CR0 registers correspond to timers n0 and n1 respectively.

Register Configuration

bit	7	6	5	4	3	2	1	0
Field	IFE	C2	C1	C0	F3	F2	F1	F0
Attribute	R/W	R/W	R/W	R/W	R/W	R/W	R/W	R/W
Initial value	0	0	0	0	0	0	0	0

Register Functions

[bit7] IFE: IF flag interrupt enable bit

This bit enables or disables IF flag interrupts.

During timer operation (Tn0CR1/Tn1CR1:STA = 1), the write access to this bit has no effect on operation. Ensure that the timer has stopped before modifying this bit.

With this bit set to "1", an IF flag interrupt request is output when both the IE bit (Tn0CR1/Tn1CR1:IE) and the IF flag (Tn0CR1/Tn1CR1:IF) are set to "1".

bit7	Details
Writing "0"	Disables the IF flag interrupt.
Writing "1"	Enables the IF flag interrupt.

[bit6:4] C[2:0]: Count clock select bits

These bits select the count clock. The count clock is generated by the prescaler. See 3.9.Operation of Prescaler.

During timer operation (Tn0CR1/Tn1CR1:STA = 1), the write access to these bits has no effect on operation in timer operation.

The clock selection of Tn1CR0 (timer n1) is nullified in 16-bit operation.

These bits cannot be set to "0b111" when the PWC function or input capture function is used. An attempt to write "0b111" with the PWC function or input capture function in use resets the bits to "0b000". The bits are also reset to "0b000" if the timer enters the input capture operation mode with the bits set to "0b111".

When these bits are set to "0b110", the count clock from the time-base timer is used as the count clock. Depending on the settings of the SYCC register, the count clock from the time-base timer can be generated from the main clock, the main CR clock, or the main CR PLL clock. In the case of using the count clock from the time-base timer as the count clock, resetting the time-base timer by writing "1" to the time-base timer clear bit in the time-base timer control register (TBTC:TCLR) affects the count time.

bit6:4	Details (MCLK: machine clock, F_{CH}: main clock, F_{CRH}: main CR clock, F_{MCRPLL}: main CR PLL clock)
Writing "000"	1 MCLK
Writing "001"	MCLK/2
Writing "010"	MCLK/4
Writing "011"	MCLK/8
Writing "100"	MCLK/16
Writing "101"	MCLK/32
Writing "110"	$F_{CH}/2^7$, $F_{CRH}/2^6$ or $F_{MCRPLL}/2^{6*}$
Writing "111"	External clock

*: The value to be used as the count clock depends on the settings of the SCS[2:0] bits in the SYCC register.

[bit3:0] F[3:0]: Timer operating mode select bits

These bits select the timer operating mode.

The PWM timer function (variable-cycle mode; F[3:0] = 0b0100) is set by either the Tn0CR0 (timer n0) register or Tn1CR0 (timer n1) register. If one of the timers starts operating (Tn0CR1/Tn1CR1: STA= 1), the F[3:0] bits of the other timer are automatically set to "0b0100".

With the 16-bit operation having been selected (TMCRn:MOD = 1), if the composite timer starts operating using the PWM timer function (variable-cycle mode) (Tn0CR1/Tn1CR1:STA = 1), the MOD bit is set to "0" automatically.

Write access to these bits is nullified in timer operation (Tn0CR1/Tn1CR1:STA = 1).

bit3:0	Details
Writing "0000"	Interval timer (one-shot mode)
Writing "0001"	Interval timer (continuous mode)
Writing "0010"	Interval timer (free-run mode)
Writing "0011"	PWM timer (fixed-cycle mode)
Writing "0100"	PWM timer (variable-cycle mode)
Writing "0101"	PWC timer (H pulse = rising edge to falling edge)
Writing "0110"	PWC timer (L pulse = falling edge to rising edge)
Writing "0111"	PWC timer (cycle = rising edge to rising edge)
Writing "1000"	PWC timer (cycle = falling edge to falling edge)
Writing "1001"	PWC timer (H pulse = rising edge to falling edge; cycle = rising edge to rising edge)
Writing "1010"	Input capture (rising edge, free-run counter)
Writing "1011"	Input capture (falling edge, free-run counter)
Writing "1100"	Input capture (both edges, free-run counter)
Writing "1101"	Input capture (rising edge, counter clear)
Writing "1110"	Input capture (falling edge, counter clear)
Writing "1111"	Input capture (both edges, counter clear)

12.14.2 8/16-bit Composite Timer Status Control Register 1 (Tn0CR1/Tn1CR1)

The 8/16-bit composite timer status control register 1 (Tn0CR1/Tn1CR1) controls the interrupt flag, timer output, and timer operations. Tn0CR1 and Tn1CR1 registers correspond to timers n0 and n1 respectively.

Register Configuration

bit	7	6	5	4	3	2	1	0
Field	STA	HO	IE	IR	BF	IF	SO	OE
Attribute	R/W	R/W	R/W	R/W	R/W	R/W	R/W	R/W
Initial value	0	0	0	0	0	0	0	0

Register Functions

[bit7] STA: Timer operation enable bit

This bit enables or stops the timer operation.

Writing "0": stops the timer operation and sets the count value to "0x00".

- With the PWM timer function (variable-cycle mode) in use (Tn0CR0/Tn1CR0:F[3:0] = 0b0100), the STA bit in either the Tn0CR1 (timer n0) or the Tn1CR1 (timer n1) register can be used to enable or disable the timer operation. If the STA bit in one of the registers is set to "0", the STA bit in the other one is automatically set to the same value.
- In 16-bit operation (TMCRn:MOD = 1), use the STA bit in the Tn0CR1 (timer n0) register to enable or disable timer operation. If the STA bit of one of the timers is set to "0", the STA bit in the other one is automatically set to the same value.

Writing "1": starts the timer operation from the count value "0x00".

- Before setting this bit to "1", set the count clock select bits (Tn0CR0/Tn1CR0:C[2:0]), timer operation select bits (Tn0CR0/Tn1CR0:F[3:0]), timer output initial value bit (Tn0CR1/Tn1CR1:SO), 16-bit mode enable bit (TMCRn:MOD), and filter function select bits (TMCRn:FEn1, FEn0).

bit7	Details
Writing "0"	Stops the timer operation.
Writing "1"	Enables the timer operation.

[bit6] HO: Timer suspend bit

This bit suspends or resumes the timer operation.

Writing "1" to this bit during timer operation suspends the timer operation.

When the timer operation has been enabled (Tn0CR1/Tn1CR1:STA = 1), writing "0" to the bit resumes the timer operation.

With the PWM timer function (variable-cycle mode) in use (Tn0CR0/Tn1CR0:F[3:0] = 0b0100), the HO bit in either Tn0CR1 (timer n0) or Tn1CR1 (timer n1) can be used to suspend or resume timer operation. If the HO bit in one of the registers is set to "0" or "1", the HO bit in the other one is automatically set to the same value.

In 16-bit operation (TMCRn:MOD = 1), use the HO bit in the Tn0CR1 (timer n0) register to suspend or resume timer operation. If the HO bit in one of the registers is set to "0" or "1", the HO bit in the other one is automatically set to the same value.

bit6	Details
Writing "0"	Resumes the timer operation.
Writing "1"	Suspends the timer operation.

[bit5] IE: Interrupt request enable bit

This bit enables or disables the output of interrupt requests.

Writing "0" to this bit disables the interrupt request.

Writing "1" to this bit outputs an interrupt request when the pulse width measurement completion/edge detection flag (Tn0CR1/Tn1CR1:IR) or timer reload/overflow flag (Tn0CR1/Tn1CR1:IF) is "1".

However, an interrupt request from the timer reload/overflow flag (Tn0CR1/Tn1CR1:IF) is not output unless the IF flag interrupt enable bit (Tn0CR0/Tn1CR0:IFE) is also set to "1".

bit5	Details
Writing "0"	Disables the interrupt request.
Writing "1"	Enables the interrupt request.

[bit4] IR: Pulse width measurement completion/edge detection flag

This bit indicates the completion of pulse width measurement or the detection of an edge.
Writing "0" to this bit sets it to "0".
Writing "1" to this bit has no effect on operation.
With the PWC timer function in use, this bit is set to "1" immediately after pulse width measurement is complete.
With the input capture function in use, this bit is set to "1" immediately after an edge is detected.
The bit is set to "0" when the function of the composite timer selected is neither the PWC timer function nor the input capture function.
When read by the read-modify-write (RMW) type of instruction, this bit always returns "1".
The IR bit in the Tn1CR1 (timer n1) register is set to "0" in 16-bit operation.

bit4	Details
Reading "0"	Indicates that the pulse width measurement has been completed or no edge has been detected.
Reading "1"	Indicates that the pulse width measurement has been completed or an edge has been detected.
Writing "0"	Clears this flag.
Writing "1"	Has no effect on operation.

[bit3] BF: Data register full flag

With the PWC timer function in use, this bit is set to "1" when a count value is stored in the 8/16-bit composite timer data register (Tn0DR/Tn1DR) immediately after pulse width measurement is complete.
In 8-bit operation, this bit is set to "0" when the 8/16-bit composite timer data register (Tn0DR/Tn1DR) is read.
The 8/16-bit composite timer data register (Tn0DR/Tn1DR) holds data if this bit is set to "1". With this bit being "1", even when the next edge is detected, the count value is not transferred to the 8/16-bit composite timer data register (Tn0DR/Tn1DR), and the next measurement result is thus lost. Nonetheless, there is an exception. With the F[3:0] bits in the Tn0CR0/Tn1CR0 register having been set to "0b1001", even though the BF bit is set to "1", the "H" pulse measurement result is transferred to the 8/16-bit composite timer data register (Tn0DR/Tn1DR), while the cycle measurement result is not transferred to the 8/16-bit composite timer data register. Therefore, in order to perform cycle measurement, the "H" pulse measurement result must be read before a cycle is completed. In addition, the result of "H" pulse measurement and that of cycle measurement are lost if they are not read before the completion of the next "H" pulse.
The BF bit in the Tn0CR1 (timer n0) register is set to "0" when the Tn1DR (timer n1) register is read during 16-bit operation.
The BF bit in the Tn1CR1 (timer n1) register is set to "0" during 16-bit operation.
This bit is "0" when any timer function other than the PWC timer function is selected.
Writing a value to this bit has no effect on operation.

bit3	Details
Reading "0"	Indicates that the there is no measurement data in the 8/16-bit composite timer data register (Tn0DR/Tn1DR).
Reading "1"	Indicates that the there is measurement data in the 8/16-bit composite timer data register (Tn0DR/Tn1DR).

[bit2] IF: Timer reload/overflow flag

This bit detects the count value match and the counter overflow.
With the interval timer function (one-shot or continuous) or the PWM timer function (variable-cycle mode) in use, this bit is set to "1" if the 8/16-bit composite timer data register (Tn0DR/Tn1DR) value matches the count value.
With the PWC timer function or the input capture function in use, this bit is set to "1" if a counter overflow occurs.
When read by the read-modify-write (RMW) type of instruction, this bit always returns "1".Writing "0" to this bit sets it to "0".
Writing "1" to this bit has no effect on operation.
This bit becomes "0" if the PWM function (variable-cycle mode) is selected.
The IF bit in the Tn1CR1 (timer n1) register is "0" in 16-bit operation.

bit2	Details
Reading "0"	Indicates that neither timer reload nor overflow has occurred.
Reading "1"	Indicates that the a timer reload or an overflow has occurred.
Writing "0"	Clears this flag.
Writing "1"	Has no effect on operation.

[bit1] SO: Timer output initial value bit

The timer output (TMCRn:TO1/TO0) initial value is set by writing a value to this bit. The value in this bit is reflected in the timer output when the timer operation enable bit (Tn0CR1/Tn1CR1:STA) changes from "0" to "1".
In 16-bit operation (TMCRn:MOD = 1), use the SO bit in the Tn0CR1 (timer n0) register to set the timer output initial value. In this case, the value of the SO bit in the other one has no effect on operation.
During timer operation (Tn0CR1/Tn1CR1:STA = 1), the write access to this bit is invalid. However, in 16-bit operation, although a value can be written to the SO bit in the Tn1CR1 (timer n1) register even during timer operation, the value written has no direct effect on the timer output.
When the PWM timer function (fixed cycle mode or variable cycle mode) or the input capture function is in use, the value of this bit has no effect on operation.

bit1	Details
Writing "0"	Sets "0" as the timer output initial value.
Writing "1"	Sets "1" as the timer output initial value.

[bit0] OE: Timer output enable bit

This bit enables or disables timer output.
Writing "0" to this bit disables outputting the timer value (TMCRn:TO1/TO0) to the external pin. In this case, the external pin serves as a general-purpose port.
Writing "1"to this bit enables outputting the timer value to the external pin.

bit0	Details
Writing "0"	Disables timer output.
Writing "1"	Enables timer output.

12.14.3 8/16-bit Composite Timer Timer Mode Control Register (TMCRn)

The 8/16-bit composite timer timer mode control register (TMCRn) selects the filter function, 8-bit or 16-bit operating mode, and signal input to timer n0 and indicates the timer output value. This register serves both timer n0 and timer n1.

Register Configuration

bit	7	6	5	4	3	2	1	0
Field	TO1	TO0	TIS	MOD	FE11	FE10	FE01	FE00
Attribute	R	R	R/W	R/W	R/W	R/W	R/W	R/W
Initial value	0	0	0	0	0	0	0	0

Register Functions

[bit7] TO1: Timer n1 output bit

This bit indicates the output value of timer n1. When the timer starts operation (Tn0CR1/Tn1CR1:STA = 1), the value in the bit changes depending on the timer function selected.
Writing a value to this bit has no effect on operation.
In 16-bit operation, if the PWM timer function (variable-cycle mode) or the input capture function is selected, the value in the bit becomes undefined.
With the interval timer function or the PWC timer function having been selected, if the timer stops operating (Tn0CR1/Tn1CR1:STA = 0), this bit holds the last value.
With the PWM timer function (variable-cycle mode) having been selected, if the timer stops operating (Tn0CR1/Tn1CR1:STA = 0), this bit holds the last value.
When the timer operating mode select bits (Tn0CR0/Tn1CR0:F[3:0]) are modified with the timer stopping operating, this bit indicates the last value of timer operation if the same timer operation has been performed; otherwise it indicates its initial value "0".

[bit6] TO0: Timer n0 output bit

This bit indicates the output value of timer n0. When the timer starts operation (Tn0CR1/Tn1CR1:STA = 1), the value in the bit changes depending on the selected timer function.
Writing a value to this bit has no effect on operation.
If the input capture function is selected, the value in the bit becomes undefined.
With the interval timer function or the PWC timer function having been selected, if the timer stops operating (Tn0CR1/Tn1CR1:STA = 0), this bit holds the last value.
With the PWM timer function (variable-cycle mode) having been selected, if the timer stops operating (Tn0CR1/Tn1CR1:STA = 0), this bit holds the last value.
When the timer operating mode select bits (Tn0CR0/Tn1CR0:F[3:0]) are modified with the timer stopping operating, this bit indicates the last value of timer operation if the same timer operation has been performed; otherwise it indicates its initial value "0".

[bit5] TIS: Timer n0 internal signal select bit

This bit selects the signal input to timer n0 when the PWC timer function or input capture function is selected.
The functions of this bit vary among channels. Details of the functions for different channels are explained below.

- Ch.0
  Writing "0" to this bit selects the external signal (EC0) as the signal input for timer 00.
  Writing "1" to this bit selects the internal signal (TII0) as the signal input for timer 00.
  The external pin assignment for the EC0 pin can be changed.
  For details, see Chapter 29.System Configuration Controller.
  During timer operation (T00CR1:STA = 1), the write access to this bit is invalid.

bit5	Details
Writing "0"	Selects the external signal (EC0) as the signal input for timer 00.
Writing "1"	Selects the internal signal (TII0) as the signal input for timer 00.

- Channels other than ch. 0
  Writing "0" to this bit selects the external signal (ECn) as the signal input for timer n0.
  Writing "1" to this bit is prohibited. Always write "0" to this bit.

bit5	Details
Writing "0"	Selects the external signal (ECn) as the signal input for timer n0.
Writing "1"	Setting prohibited.

[bit4] MOD: 8-bit/16-bit operating mode select bit

This bit selects 8-bit or 16-bit operating mode.
Writing "0" to this bit allows timers n0 and n1 to operate as separate 8-bit timers.
Writing "1" to this bit allows timers n0 and n1 to operate as a 16-bit timer.
While this bit is "1", if the timer starts operating (Tn0CR1/Tn1CR1:STA = 1) with the PWM timer function (variable-cycle mode), this bit is automatically set to "0".
During timer operation (Tn0CR1/Tn1CR1:STA = 1), the write access to this bit is invalid.

bit4	Details
Writing "0"	Selects the 8-bit operating mode.
Writing "1"	Selects the 16-bit operating mode.

[bit3:2] FE1[1:0]: Timer n1 filter function select bits

These bits select the filter function for the external signal (ECn) to timer n1 when the PWC timer function or the input capture function is selected.
During timer operation (Tn1CR1:STA = 1), the write access to these bits is invalid.
The settings of the bits have no effect on operation when the interval timer function or the PWM timer function is selected (the filter function does not operate.).

bit3:2	Details
Writing "00"	Disables the filter function.
Writing "01"	Filters out "H" pulse noise.
Writing "10"	Filters out "L" pulse noise.
Writing "11"	Filters out both "H" pulse noise and "L" pulse noise.

[bit1:0] FE0[1:0]: Timer n0 filter function select bits

These bits select the filter function for the external signal (ECn) to timer n0 when the PWC timer function or the input capture function is selected.
During timer operation (Tn0CR1:STA = 1), the write access to these bits is invalid.
The settings of the bits have no effect on operation when the interval timer function or the PWM timer function is selected (the filter function does not operate.).

bit1:0	Details
Writing "00"	Disables the filter function.
Writing "01"	Filters out "H" pulse noise.
Writing "10"	Filters out "L" pulse noise.
Writing "11"	Filters out both "H" pulse noise and "L" pulse noise.

12.14.4 8/16-bit Composite Timer Data Register (Tn0DR/Tn1DR)

The 8/16-bit composite timer data register (Tn0DR/Tn1DR) is used to set the maximum count value during the interval timer operation or the PWM timer operation and to read the count value during the PWC timer operation or the input capture operation. The Tn0DR and Tn1DR registers correspond to timers n0 and n1 respectively.

Register Configuration

bit	7	6	5	4	3	2	1	0
Field	TDR7	TDR6	TDR5	TDR4	TDR3	TDR2	TDR1	TDR0
Attribute	R/W	R/W	R/W	R/W	R/W	R/W	R/W	R/W
Initial value	0	0	0	0	0	0	0	0

- Interval timer function

The 8/16-bit composite timer data register (Tn0DR/Tn1DR) is used to set the interval time. When the timer starts operating (Tn0CR1/Tn1CR1:STA = 1), the value of this register is transferred to the latch in the 8-bit comparator and the counter starts counting. When the count value matches the value held in the latch in the 8-bit comparator, the value of this register is transferred again to the latch, and the counter returns to "0x00" and continues to count.

The current count value can be read from this register.

An attempt to write "0x00" to this register is disabled in interval timer function.

In 16-bit operation, write the upper timer data to Tn1DR and lower timer data to Tn0DR, and write or read Tn1DR first and then Tn0DR.

- PWM timer function (fixed-cycle)

The 8/16-bit composite timer data register (Tn0DR/Tn1DR) is used to set "H" pulse width time. When the timer starts operating (Tn0CR1/Tn1CR1:STA = 1), the value of this register is transferred to the latch in the 8-bit comparator and the counter starts counting from timer output "H". When the count value matches the value transferred to the latch, the timer output becomes "L" and the counter continues to count until the count value reaches "0xFF". When an overflow occurs, the value of this register is transferred again to the latch in the 8-bit comparator and the counter performs the next cycle of counting.

The current value can be read from this register. In 16-bit operation, write the upper timer data to Tn1DR and lower timer data to Tn0DR, and write or read Tn1DR first and then Tn0DR.

- PWM timer function (variable-cycle)

The 8/16-bit composite timer n0 data register (Tn0DR) and 8/16-bit composite timer n1 data register (Tn1DR) are used to set "L" pulse width time and cycle respectively. When the timer starts operating (Tn0CR1/Tn1CR1:STA = 1), the value of each register is transferred to the latch in the 8-bit comparator and the two counters start counting from timer output "L". When the Tn0DR value transferred to the latch matches the timer n0 counter value, the timer output becomes "H" and the counting continues until the Tn1DR value transferred to the latch matches the timer n1 counter value. When the Tn1DR value transferred to the latch of the 8-bit comparator matches the timer n1 counter value, the values of the Tn0DR register and the T01DR register are transferred again to the latch and the counter performs the next PWM cycle of counting.

The current count value can be read from this register. In 16-bit operation, write the upper timer data to Tn1DR and lower timer data to Tn0DR, and read Tn1DR first and then Tn0DR.

- PWC timer function

The 8/16-bit composite timer data register (Tn0DR/Tn1DR) is used to read PWC measurement results. When PWC measurement is completed, the counter value is transferred to this register and the BF bit is set to "1".

When the 8/16-bit composite timer data register is read, the BF bit is set to "0". While the BF bit is "1", no data is transferred to the 8/16-bit composite timer data register.

There is an exception. With the F[3:0] bits in the Tn0CR0/Tn1CR0 register having been set to "0b1001", even though the BF bit is set to "1", the "H" pulse measurement result is transferred to the 8/16-bit composite timer data register, while the cycle measurement result is not transferred to the 8/16-bit composite timer data register. Therefore, in order to perform cycle measurement, the "H" pulse measurement result must be read before a cycle is completed. In addition, the result of "H" pulse measurement and that of cycle measurement are lost if they are not read before the completion of the next "H" pulse.

When reading the 8/16-bit composite timer data register, ensure that the BF bit is not cleared accidentally.

If new data is written to the 8/16-bit composite timer data register, the stored measurement data is replaced with the new data. Therefore, do not write data to the register. In 16-bit operation, write the upper timer data to Tn1DR and lower timer data to Tn0DR, and read Tn1DR first and then Tn0DR.

- Input capture function

The 8/16-bit composite timer data register (Tn0DR/Tn1DR) is used to read input capture results. When an edge specified is detected, the counter value is transferred to the 8/16-bit composite timer data register.

If new data is written to the 8/16-bit composite timer data register, the stored measurement data is replaced with the new data. Therefore, do not write data to the register. In 16-bit operation, write the upper timer data to Tn1DR and lower timer data to Tn0DR, and read Tn1DR first and then Tn0DR.

- Read and write operations

Read and write operations of Tn0DR and Tn1DR are performed in the following manner in 16-bit operation or when the PWM timer function (variable-cycle) is selected.

1. Read from Tn1DR: In addition to the read access to Tn1DR, the value of Tn0DR is also stored in the internal read buffer at the same time.
2. Read from Tn0DR: The internal read buffer is read.
3. Write to Tn1DR: Data is written to the internal write buffer.
4. Write to Tn0DR: In addition to the write access to Tn0DR, the value of the internal write buffer is stored in Tn1DR at the same time.

Figure 12-17 shows the Tn0DR and Tn1DR registers read from and written to during 16-bit operation.

Figure 12-17. Read and Write Operations of Tn0DR and Tn1DR Registers during 16-bit Operation

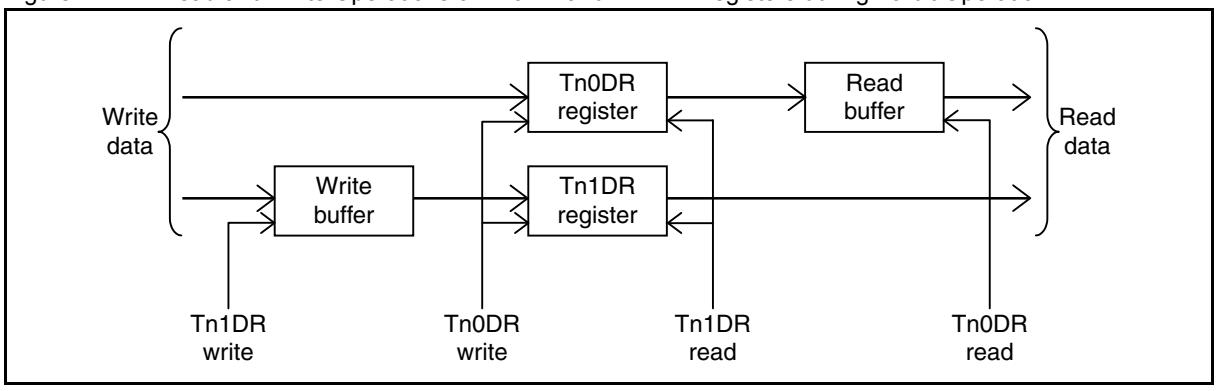

12.15 Notes on Using 8/16-bit Composite Timer

This section provides notes on using the 8/16-bit composite timer.

12.15.1 Notes on Using 8/16-bit Composite Timer

- To switch the timer function with the timer operating mode select bits (Tn0CR0/Tn1CR0:F[3:0]), stop the timer operation first (Tn0CR1/Tn1CR1:STA = 0), then clear the interrupt flag (Tn0CR1/Tn1CR1:IF, IR), the interrupt enable bits (Tn0CR1/Tn1CR1:IE, Tn0CR0/Tn1CR0:IFE) and the buffer full flag (Tn0CR1/Tn1CR1:BF).
- In the case of using the input capture function, when both edges of the external input signal is selected as the timing at which the 8/16-bit composite timer captures a counter value (Tn0CR0/Tn1CR0:F[3:0] = 0b1100 or 0b1111) while "H" level external input signal is being input, the first falling edge will be ignored, no counter value will be transferred to the data register (Tn0DR/Tn1DR), and pulse width measurement completion/edge detection flag (Tn0CR1/Tn1CR1:IR) will not be set either.
  - In counter clear mode, the counter will not be cleared at the first falling edge and no data will be transferred to the data register either. The 8/16-bit composite timer will start the input capture operation from the next rising edge.
  - In counter free-run mode, no data will be transferred to the data register at the first falling edge. The 8/16-bit composite timer will start the input capture operation from the next rising edge.
- In 8-bit operating mode (TMCRn:MOD = 0) of the PWM timer function (variable-cycle mode), when modifying the 8/16-bit composite timer data registers (Tn0DR and Tn1DR) during counter operation, modify Tn1DR first and then Tn0DR.
- The counter stops operating while holding the value when the microcontroller transits to stop mode or watch mode. When the stop mode or watch mode is released by an interrupt, the counter resumes operating with the last value that it holds (see Figure 12-18 and Figure 12-19). Therefore, the first interval time or the initial external clock count value is incorrect. Always initialize the counter value after the microcontroller is released from stop mode or watch mode.

Figure 12-18. Operations of Counter in Standby Mode or in Pause (Not Serving as PWM Timer)

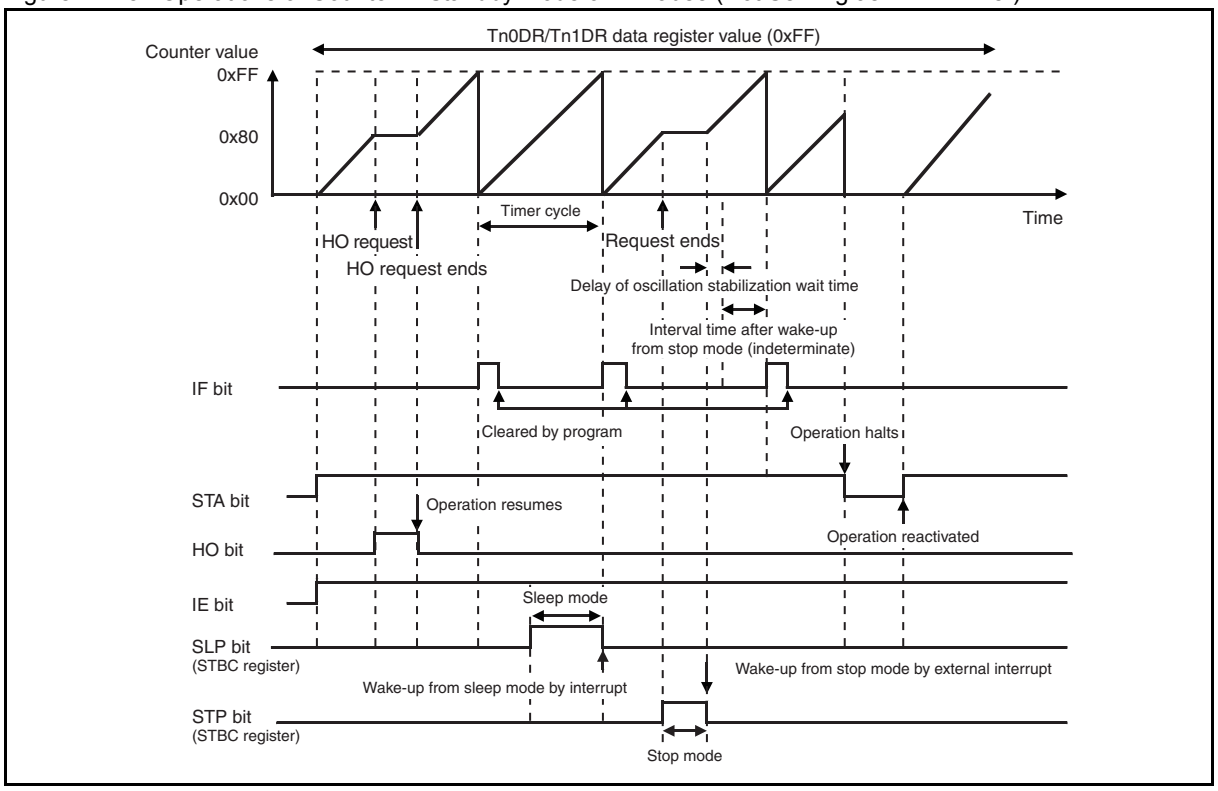

Figure 12-19. Operations of Counter in Standby Mode or in Pause (Serving as PWM Timer)

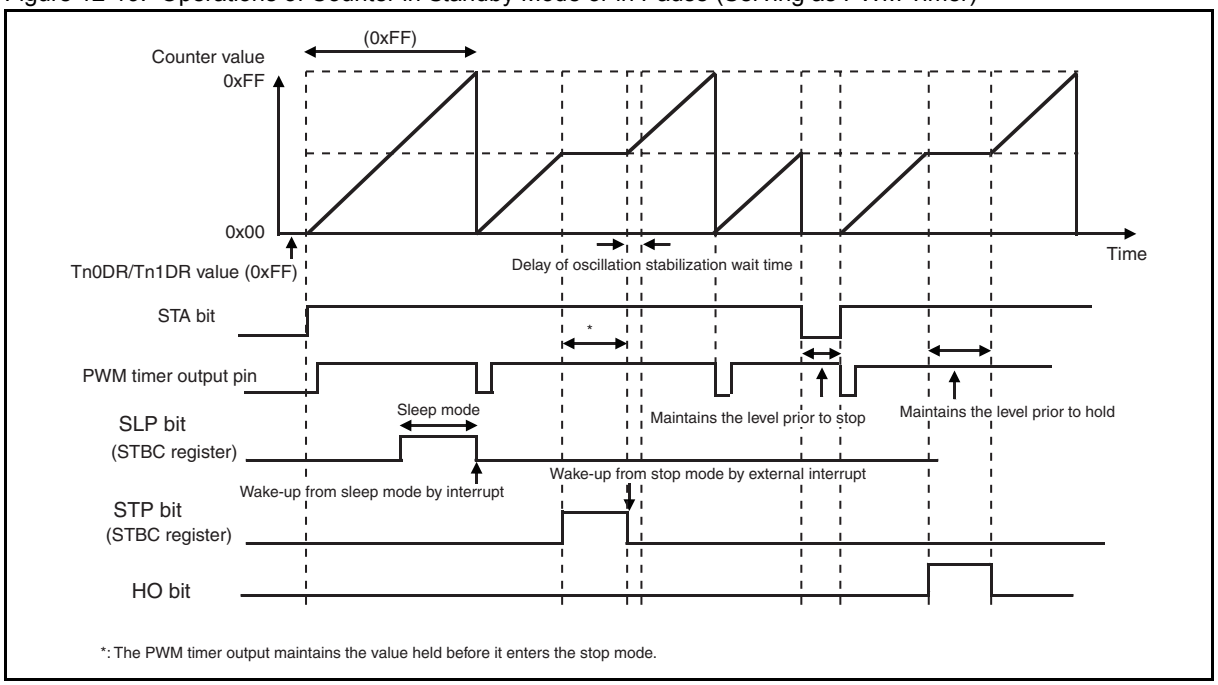

13. External Interrupt Circuit

This chapter describes the functions and operations of the external interrupt circuit.

13.1 Overview

13.2 Configuration

13.3 Channels

13.4 Pin

13.5 Interrupt

13.6 Operations and Setting Procedure Example

13.7 Register

13.8 Notes on Using External Interrupt Circuit

13.1 Overview

The external interrupt circuit detects edges on the signal that is input to the external interrupt pin, and outputs interrupt requests to the interrupt controller.

13.1.1 Function of External Interrupt Circuit

The external interrupt circuit detects any edge of a signal that is input to an external interrupt pin and generates interrupt requests to the interrupt controller. The interrupt generated according to this interrupt request can cause the device to wake up from standby mode and return to its normal operating state. Therefore, the operating mode of the device can be changed when a signal is input to the external interrupt pin.

13.2 Configuration

The external interrupt circuit consists of the following blocks:

- Edge detection circuit
- External interrupt control register

13.2.1 Block Diagram of External Interrupt Circuit

Figure 13-1 is the block diagram of the external interrupt circuit.

Figure 13-1. Block Diagram of External Interrupt Circuit

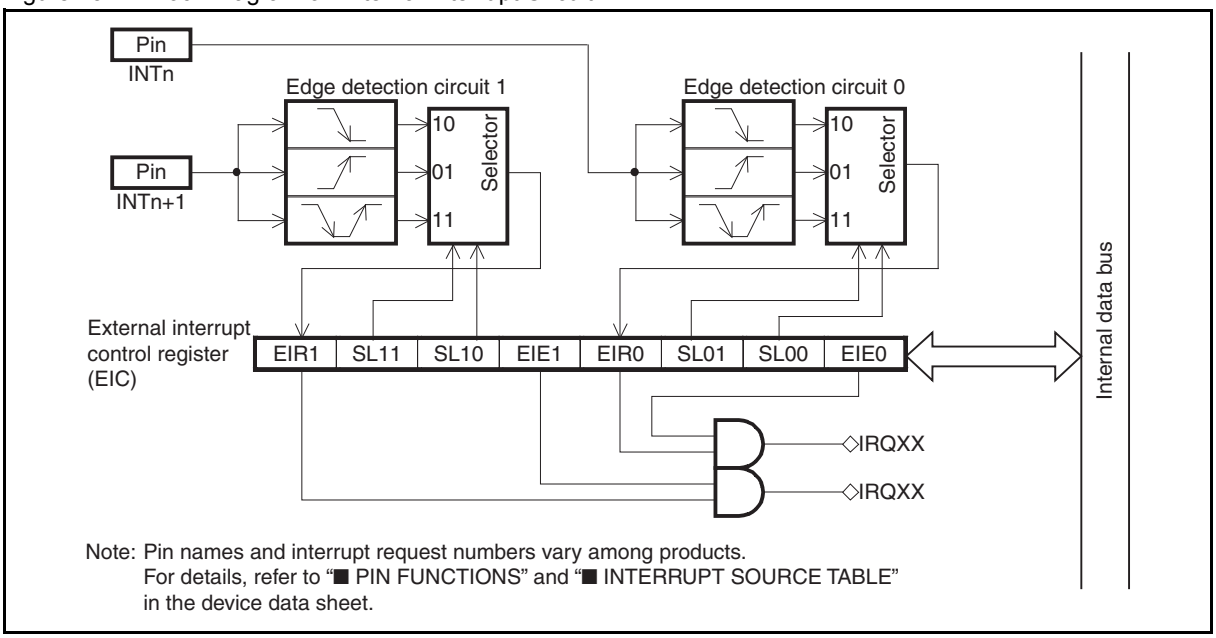

- Edge detection circuit

When the polarity of the edge detected on a signal input to an external interrupt circuit pin (INT) matches the polarity of the edge selected in the interrupt control register (EIC), a corresponding external interrupt request flag bit (EIR) is set to "1".

- External interrupt control register (EIC)

This register is used to select an edge, enable or disable interrupt requests, check for interrupt requests, etc.

13.3 Channels

This section describes the channels of the external interrupt circuit.

13.3.1 Channels of External Interrupt Circuit

Table 13-1 shows the pins and their corresponding registers of the external interrupt.

Table 13-1. Pins and Register of External Interrupt Circuit

Pin name	Pin function	Corresponding register
INTn	External interrupt input ch. n	External interrupt control register (EIC)
INTn+1	External interrupt input ch. n+1	
INTn+2	External interrupt input ch. n+2	
INTn+3	External interrupt input ch. n+3	

The number of external interrupt circuit units varies among products. For the number of external interrupt circuit units in an individual product, refer to the device data sheet.

13.4 Pin

This section provides details of the pin of the external interrupt circuit.

13.4.1 Pin of External Interrupt Circuit

- INT pin

This pin serves both as an external interrupt input pin and as a general-purpose I/O port.

If the INT pin is set as an input port by the port direction register (DDR) and the corresponding external interrupt input is enabled by the external interrupt control register (EIC), that pin functions as an external interrupt input pin (INT).

The state of a pin can always be read from the port data register (PDR) when that pin is set as an input port. The value of PDR can be read by using the read-modify-write (RMW) type of instruction.

13.5 Interrupt

The interrupt source for the external interrupt circuit is the detection of the specified edge of the signal input to an external interrupt pin.

13.5.1 Interrupt during Operation of External Interrupt Circuit

When the specified edge of external interrupt input is detected, the corresponding external interrupt request flag bit (EIC:EIR0 or EIR1) is set to "1". In this case, if the interrupt request enable bit (EIC:EIE0 or EIE1 = 1) corresponding to that external interrupt request flag bit is enabled, an interrupt request is generated to the interrupt controller. In an interrupt service routine, write "0" to the external interrupt request flag bit corresponding to that interrupt request generated to clear the interrupt request.

13.6 Operations and Setting Procedure Example

This section describes the operations of the external interrupt circuit.

13.6.1 Operations of External Interrupt Circuit

When the polarity of an edge of a signal input from one of the external interrupt pins (INTn, INTn+1) matches the polarity of the edge selected by the external interrupt control register (EIC:SL0[1:0] or SL1[1:0]), the corresponding external interrupt request flag bit (EIC:EIR0 or EIR1) is set to "1" and the interrupt request is generated.

Always set the interrupt request enable bit to "0" when not using an external interrupt to wake up the device from standby mode.

When setting the edge polarity select bit (SL00, SL01 or SL10, SL11), set the interrupt request enable bit (EIE0 or EIE1) to "0" to prevent the interrupt request from being generated accidentally. Also clear the interrupt request flag bit (EIR0 or EIR1) to "0" after changing the edge polarity.

Figure 13-2 shows the operations for setting the INTn pin as an external interrupt input.

Figure 13-2. Operations of External Interrupt

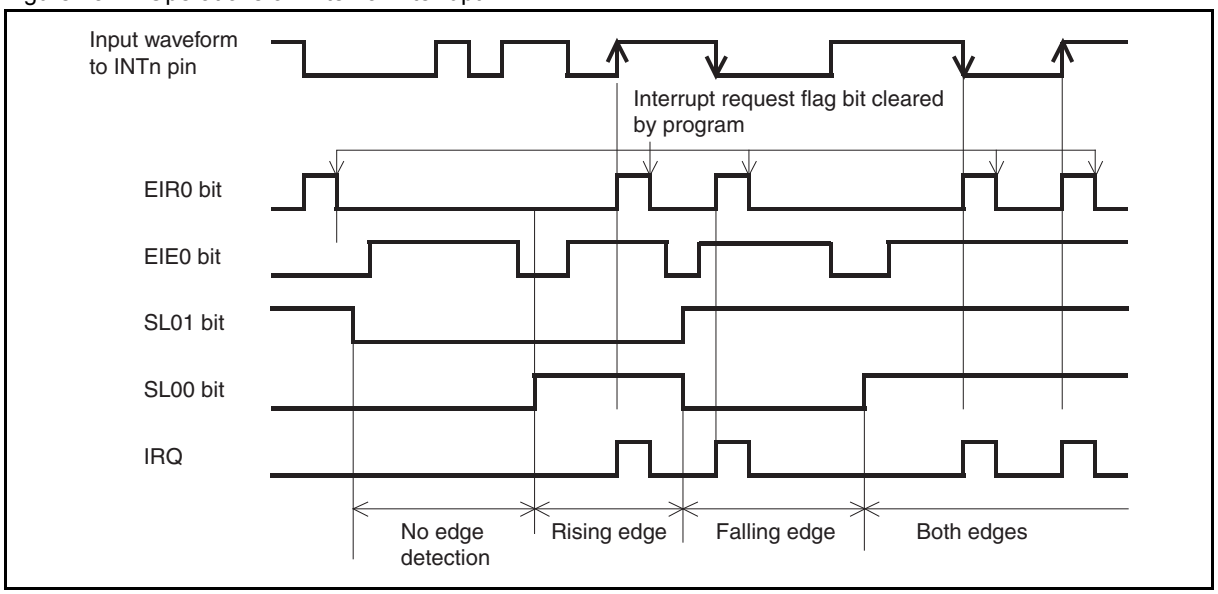

13.6.2 Setting Procedure Example

Below is an example of procedure for setting the external interrupt circuit.

- Initial settings

1. Set the interrupt level. (ILR*)
2. Select the edge polarity. (EIC:SL0[1:0])
3. Enable interrupt requests. (EIC:EIE0 = 1)

*: For details of the interrupt level setting register (ILR), refer to Chapter 5.Interrupts in this hardware manual and "Interrupt Source Table" in the device data sheet.

- Interrupt processing

1. Clear the interrupt request flag. (EIC:EIR0 = 0)
2. Process any interrupt.

Note:

An external interrupt input port shares the same pin with a general-purpose I/O port. Therefore, when using the pin as an external interrupt input port, set the bit in the port direction register (DDR) corresponding to that pin to "0" (input).

13.7 Register

This section describes the register of the external interrupt circuit.

Table 13-2. List of External Interrupt Circuit Register

Register abbreviation	Register name	Reference
EIC	External interrupt control register	13.7.1

13.7.1 External Interrupt Control Register (EIC)

The external interrupt control register (EIC) is used to select the edge polarity for the external interrupt input and control interrupts.

Register Configuration

bit	7	6	5	4	3	2	1	0
Field	EIR1	SL11	SL10	EIE1	EIR0	SL01	SL00	EIE0
Attribute	R/W	R/W	R/W	R/W	R/W	R/W	R/W	R/W
Initial value	0	0	0	0	0	0	0	0

Register Functions

[bit7] EIR1: External interrupt request flag bit 1

This flag is set to "1" when the edge selected by the edge polarity select bits 1 (SL1[1:0]) is input to the external interrupt pin INTn+1.

When this bit and the interrupt request enable bit 1 (EIE1) are set to "1", an interrupt request is output.

Writing "0" clears this bit. Writing "1" has no effect on operation.

When read by the read-modify-write (RMW) type of instruction, this bit always returns "1".

bit7	Details
Reading "0"	Indicates that the specified edge has not been input.
Reading "1"	Indicates that the specified edge has been input.
Writing "0"	Clears this bit.
Writing "1"	Has no effect on operation.

[bit6:5] SL1[1:0]: Edge polarity select bits 1

These bits select the polarity of an edge of the pulse input to the external interrupt pin INTn+1. The edge selected is to be the interrupt source.

If these bits are set to "0b00", no edge detection is performed and no interrupt request is made.

If these bits are set to "0b01", rising edges are to be detected; if "0b10", falling edges are to be detected; if "0b11", both edges are to be detected.

bit6:5	Details
Writing "00"	No edge detection
Writing "01"	Rising edge
Writing "10"	Falling edge
Writing "11"	Both edges

[bit4] EIE1: Interrupt request enable bit 1

This bit enables or disables outputting the interrupt request to the interrupt controller. When this bit and the external interrupt request flag bit 1 (EIR1) are "1", an interrupt request is output.

When using an external interrupt pin, write "0" to the corresponding bit in the port direction register (DDR) to set the pin as an input port.

The status of the external interrupt pin can be read directly from the port data register, regardless of the status of the interrupt request enable bit.

bit4	Details
Writing "0"	Disables outputting the interrupt request.
Writing "1"	Enables outputting the interrupt request.

[bit3] EIR0: External interrupt request flag bit 0

This flag is set to "1" when the edge selected by the edge polarity select bits 0 (SL0[1:0]) is input to the external interrupt pin INTn.

When this bit and the interrupt request enable bit 0 (EIE0) are set to "1", an interrupt request is output.

Writing "0" clears this bit. Writing "1" has no effect on operation.

When read by the read-modify-write (RMW) type of instruction, this bit always returns "1".

bit3	Details
Reading "0"	Indicates that the specified edge has not been input.
Reading "1"	Indicates that the specified edge has been input.
Writing "0"	Clears this bit.
Writing "1"	Has no effect on operation.

[bit2:1] SL0[1:0]: Edge polarity select bits 0

These bits select the polarity of an edge of the pulse input to the external interrupt pin INTn. The edge selected is to be the interrupt source.

If these bits are set to "0b00", no edge detection is performed and no interrupt request is made.

If these bits are set to "0b01", rising edges are to be detected; if "0b10", falling edges are to be detected; if "0b11", both edges are to be detected.

bit2:1	Details
Writing "00"	No edge detection
Writing "01"	Rising edge
Writing "10"	Falling edge
Writing "11"	Both edges

[bit0] EIE0: Interrupt request enable bit 0

This bit enables or disables outputting the interrupt request to the interrupt controller. When this bit and the external interrupt request flag bit 0 (EIR0) are "1", an interrupt request is output.

When using an external interrupt pin, write "0" to the corresponding bit in the port direction register (DDR) to set the pin as an input port.

The status of the external interrupt pin can be read directly from the port data register, regardless of the status of the interrupt request enable bit.

bit0	Details
Writing "0"	Disables outputting the interrupt request.
Writing "1"	Enables outputting the interrupt request.

13.8 Notes on Using External Interrupt Circuit

This section provides notes on using the external interrupt circuit.

13.8.1 Notes on Using External Interrupt Circuit

- Before setting the edge polarity select bits (SL0[1:0] or SL1[1:0]), set the interrupt request enable bit (EIE0 or EIE1) to "0" (disabling interrupt requests). In addition, clear the external interrupt request flag bit (EIR0 or EIR1) to "0" after setting the edge polarity.
- The device cannot wake up from the interrupt service routine if the external interrupt request flag bit is "1" and the interrupt request enable bit is enabled. In the interrupt service routine, always clear the external interrupt request flag bit.

14. Interrupt Pin Selection Circuit

This chapter describes the functions and operations of the interrupt pin selection circuit.

14.1 Overview

14.2 Configuration

14.3 Pins

14.4 Operation

14.5 Register

14.6 Notes on Using Interrupt Pin Selection Circuit

14.1 Overview

The interrupt pin selection circuit selects pins to be used as interrupt input pins from among various peripheral input pins.

14.1.1 Interrupt Pin Selection Circuit

The interrupt pin selection circuit is used to select interrupt input pins from among various peripheral inputs (EC0, INT00, SCK, SIN, TRG0/ADTG, UCK0 and UI0). The input signal from each peripheral function pin is selected by this circuit and the signal is used as the INT00 (ch. 0) input of external interrupt. This enables the input signal from each peripheral function pin to also serve as an external interrupt pin.

14.2 Configuration

Figure 14-1 shows the block diagram of the interrupt pin selection circuit.

14.2.1 Block Diagram of Interrupt Pin Selection Circuit

Figure 14-1. Block Diagram of Interrupt Pin Selection Circuit

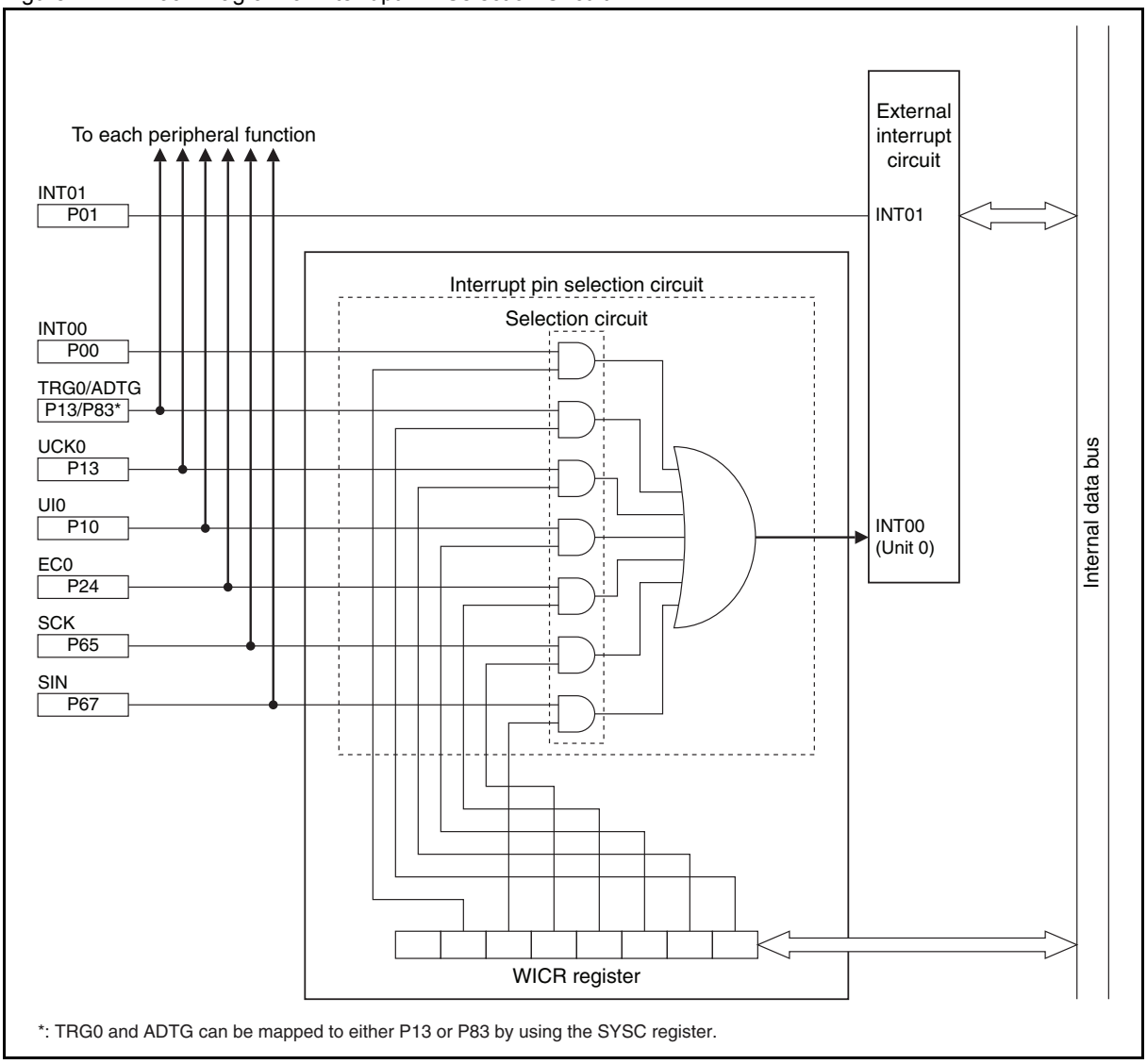

- WICR register (interrupt pin selection circuit control register)
  This register is used to determine which of the available peripheral input pins should be output to the interrupt circuit and which interrupt pins they should serve as.
- Selection circuit
  This circuit outputs the input from the pin selected by the WICR register to the INT00 input of the external interrupt circuit (ch. 0).

14.3 Pins

This section describes the pins of the interrupt pin selection circuit.

14.3.1 Pins of Interrupt Pin Selection Circuit

The peripheral function pins of the interrupt pin selection circuit are the EC0, INT00, SCK, SIN, TRG0/ADTG, UCK0 and UI0 pins. These input pins (except INT00) are also connected to their respective peripheral units in parallel and can be used for both functions simultaneously. Table 14-1 shows the correspondence between the peripheral functions and peripheral input pins.o

Table 14-1. Correspondence between Peripheral Functions and Peripheral Input Pins

Peripheral input pin name	Peripheral functions name
EC0	8/16-bit composite timer (event input)
INT00	Interrupt pin selection circuit
SCK	LIN-UART (clock I/O)
SIN	LIN-UART (data input)
TRG0/ADTG	16-bit PPG timer (trigger input)/ 8/10-bit A/D converter (trigger input)
UCK0	UART/SIO (clock I/O)
UI0	UART/SIO (data input)

14.4 Operation

The interrupt pins are selected by setting the WICR register.

14.4.1 Operation of Interrupt Pin Selection Circuit

The WICR register selects the input pins to be input to INT00 of the external interrupt circuit (ch. 0). Below is a setup procedure for the interrupt pin selection circuit and external interrupt circuit (ch. 0), which must be followed when selecting the TRG0 pin as an interrupt pin.

1. Write "0" to the corresponding bit in the port direction register (DDR) to set the pin as an input.
2. Select the TRG0 pin as an interrupt input pin in the WICR register.
   Write "0x01" to the WICR register. At this point, write "0" to the EIE0 bit in the EIC00 register of the external interrupt circuit to disable the operation of the external interrupt circuit.
3. Enable the operation of INT00 of the external interrupt circuit (ch. 0).
   Set the SL0[1:0] bits in the EIC00 register to any value other than "0b00" in the external interrupt circuit to select the valid edge. Also write "1" to the EIE0 bit to enable interrupts.
4. The subsequent interrupt operation is the same as that of the external interrupt circuit.
   When a reset is released, the WICR register is initialized to "0x40" and the INT00 bit is selected as the only available interrupt pin. To use any pins other than the INT00 pin as external interrupt pins, modify the settings of this register before enabling the operation of the external interrupt circuit.

14.5 Register

This section describes the register of the interrupt pin selection circuit.

Table 14-2. List of External Interrupt Circuit Register

Register abbreviation	Register name	Reference
WICR	Interrupt pin selection circuit control register	14.5.1

14.5.1 Interrupt Pin Selection Circuit Control Register (WICR)

This register is used to determine which of the available peripheral input pins should be output to the interrupt circuit and which interrupt pins they should serve as.

Register Configuration

bit	7	6	5	4	3	2	1	0
Field	—	INT00	SIN	SCK	EC0	UI0	UCK0	TRG0
Attribute	—	R/W	R/W	R/W	R/W	R/W	R/W	R/W
Initial value	0	1	0	0	0	0	0	0

Register Functions

[bit7] Undefined bit

The read value is always "0". Writing a value to this bit has no effect on operation.

[bit6] INT00: INT00 interrupt pin select bit

This bit determines whether to select the INT00 pin as an interrupt input pin.
Writing "0" to this bit deselects the INT00 pin as an interrupt input pin, and the interrupt pin selection circuit treats the INT00 pin input as being fixed at "0".
Writing "1" to this bit selects the INT00 pin as an interrupt input pin and the circuit passes the INT00 pin input to INT00 (ch. 0) of the external interrupt circuit. In this case, the input signal to the INT00 pin can generate an external interrupt if INT00 (ch. 0) operation is enabled in the external interrupt circuit.

bit6	Details
Writing "0"	Deselects the INT00 pin as an interrupt input pin.
Writing "1"	Selects the INT00 pin as an interrupt input pin.

[bit5] SIN: SIN interrupt pin select bit

This bit determines whether to select the SIN pin as an interrupt input pin.
Writing "0" to this bit deselects the SIN pin as an interrupt input pin, and the interrupt pin selection circuit treats the SIN pin input as being fixed at "0".
Writing "1" to this bit selects the SIN pin as an interrupt input pin and the circuit passes the SIN pin input to INT00 (ch. 0) of the external interrupt circuit. In this case, the input signal to the SIN pin can generate an external interrupt if INT00 (ch. 0) operation is enabled in the external interrupt circuit.

bit5	Details
Writing "0"	Deselects the SIN pin as an interrupt input pin.
Writing "1"	Selects the SIN pin as an interrupt input pin.

[bit4] SCK: SCK interrupt pin select bit

This bit determines whether to select the SCK pin as an interrupt input pin.
Writing "0" to this bit deselects the SCK pin as an interrupt input pin, and the interrupt pin selection circuit treats the SCK pin input as being fixed at "0".
Writing "1" to this bit selects the SCK pin as an interrupt input pin and the circuit passes the SCK pin input to INT00 (ch. 0) of the external interrupt circuit. In this case, the input signal to the SCK pin can generate an external interrupt if INT00 (ch. 0) operation is enabled in the external interrupt circuit.

bit4	Details
Writing "0"	Deselects the SCK pin as an interrupt input pin.
Writing "1"	Selects the SCK pin as an interrupt input pin.

[bit3] EC0: EC0 interrupt pin select bit

This bit determines whether to select the EC0 pin as an interrupt input pin.
Writing "0" to this bit deselects the EC0 pin as an interrupt input pin, and the interrupt pin selection circuit treats the EC0 pin input as being fixed at "0".
Writing "1" to this bit selects the EC0 pin as an interrupt input pin and the circuit passes the EC0 pin input to INT00 (ch. 0) of the external interrupt circuit. In this case, the input signal to the EC0 pin can generate an external interrupt if INT00 (ch. 0) operation is enabled in the external interrupt circuit.

bit3	Details
Writing "0"	Deselects the EC0 pin as an interrupt input pin.
Writing "1"	Selects the EC0 pin as an interrupt input pin.

[bit2] UI0: UI0 interrupt pin select bit

This bit determines whether to select the UI0 pin as an interrupt input pin.
Writing "0" to this bit deselects the UI0 pin as an interrupt input pin, and the interrupt pin selection circuit treats the UI0 pin input as being fixed at "0".
Writing "1" to this bit selects the UI0 pin as an interrupt input pin and the circuit passes the UI0 pin input to INT00 (ch. 0) of the external interrupt circuit. In this case, the input signal to the UI0 pin can generate an external interrupt if INT00 (ch. 0) operation is enabled in the external interrupt circuit.

bit2	Details
Writing "0"	Deselects the UI0 pin as the interrupt input pin.
Writing "1"	Selects the UI0 pin as the interrupt input pin.

[bit1] UCK0: UCK0 interrupt pin select bit

This bit determines whether to select the UCK0 pin as an interrupt input pin.
Writing "0" to this bit deselects the UCK0 pin as an interrupt input pin, and the interrupt pin selection circuit treats the UCK0 pin input as "0".
Writing "1" to this bit selects the UCK0 pin as an interrupt input pin and the circuit passes the UCK0 pin input to INT00 (ch. 0) of the external interrupt circuit. In this case, the input signal to the UCK0 pin can generate an external interrupt if INT00 (ch. 0) operation is enabled in the external interrupt circuit.

bit1	Details
Writing "0"	Deselects the UCK0 pin as the interrupt input pin.
Writing "1"	Selects the UCK0 pin as the interrupt input pin.

[bit0] TRG0: TRG0 interrupt pin select bit

This bit determines whether to select the TRG0 pin as an interrupt input pin.
Writing "0" to this bit deselects the TRG0 pin as an interrupt input pin, and the interrupt pin selection circuit treats the TRG0 pin input as being fixed at "0".
Writing "1" to this bit selects the TRG0 pin as an interrupt input pin and the circuit passes the TRG0 pin input to INT00 (ch. 0) of the external interrupt circuit. In this case, the input signal to the TRG0 pin can generate an external interrupt if INT00 (ch. 0) operation is enabled in the external interrupt circuit.

bit0	Details
Writing "0"	Deselects the TRG0 pin as the interrupt input pin.
Writing "1"	Selects the TRG0 pin as the interrupt input pin.

When any of these bits (except undefined bits) is set to "1" and the operation of INT00 (ch. 0) of the external interrupt circuit is enabled in standby mode of this device, the selected pin is enabled to perform input operation. The device wakes up from the standby mode when a valid edge pulse is input to the selected pin. For detail of the standby mode, see 3.5 Operations in Low Power Consumption Mode (Standby Mode).

Note:

The input signals to the peripheral pins do not generate an external interrupt even when "1" is written to these bits if the INT00 (ch. 0) of the external interrupt circuit is disabled.

Do not modify the values of these bits while the INT00 (ch. 0) of the external interrupt circuit is enabled. If modified, the external interrupt circuit may detect a valid edge, depending on the pin input level.
If multiple interrupt pins are selected in the WICR register simultaneously and the operation of INT00 (ch. 0) of the external interrupt circuit is enabled (the values other than "0b00" are written to the SL0[1:0] bits in the EIC register of the external interrupt circuit.), the selected pins will remain enabled to perform input so as to accept interrupts even in standby mode.

14.6 Notes on Using Interrupt Pin Selection Circuit

This section provides notes on using the interrupt pin selection circuit.

- If multiple interrupt pins are selected in the WICR register simultaneously and the operation of INT00 (ch. 0) of the external interrupt circuit is enabled (a value other than "0b00" is written to the SL0[1:0] bits in the EIC register of the external interrupt circuit to select a valid edge, and "1" is written to the EIE0 bit to enable the interrupt request.), the input to the selected pins will remain enabled so as to accept interrupts even in standby mode.
- If multiple interrupt pins are selected in the WICR register simultaneously, an input to INT00 (ch. 0) of the external interrupt circuit is treated as "H" if any of the selected input signals is "H" (It becomes "OR" of the signals input to the selected pins).

15. LIN-UART

This chapter describes the functions and operations of the LIN-UART.

15.1 Overview

15.2 Configuration

15.3 Pins

15.4 Interrupts

15.5 LIN-UART Baud Rate

15.6 Operations of LIN-UART and LIN-UART Setting Procedure Example

15.7 Registers

15.8 Notes on Using LIN-UART

15.1 Overview

The LIN (Local Interconnect Network)-UART is a general-purpose serial data communication interface for synchronous or asynchronous (start-stop synchronization) communication with external devices. In addition to a bi-directional communication function (normal mode) and master/slave communication function (multiprocessor mode: supports both master and slave operation), the LIN-UART also supports special functions with the LIN bus.

15.1.1 Functions of LIN-UART

The LIN-UART is a general-purpose serial data communication interface for exchanging serial data with other CPUs and peripheral devices. Table 15-1 lists the functions of the LIN-UART.

Table 15-1. Functions of LIN-UART (Sheet 1 of 2)

	Function
Data buffer	Full-duplex double-buffer
Serial input	The LIN-UART oversamples received data for five times to determine the received value by majority of sampling values (only asynchronous mode).
Transfer mode	• Clock synchronous (Select start/stop synchronization, or start/stop bits) • Clock asynchronous (Start/stop bits available)
Baud rate	• Dedicated baud rate generator provided (made of a 15-bit reload counter) • The external clock can be inputted. It can be adjusted by the reload counter.
Data length	• 7 bits (not in synchronous or LIN mode) • 8 bits
Signal type	NRZ (Non Return to Zero)
Start bit timing	Synchronization with the start bit falling edge in asynchronous mode.
Reception error detection	• Framing error • Overrun error • Parity error (Not supported in operating mode 1)

Table 15-1. Functions of LIN-UART (Sheet 2 of 2)

	Function
Interrupt request	• Receive interrupts (reception completed, reception error detected, LIN synch break detected) • Transmit interrupts (transmit data empty) • Interrupt requests to TII0 (LIN synch field detected: LSYN)
Master/slave mode communication function (Multiprocessor mode)	Capable of 1 (master) to n (slaves) communication (supports both the master and slave system)
Synchronous mode	Transmit side/receive side of serial clock
Pin access	Serial I/O pin states can be read directly.
LIN bus option	• Master device operation • Slave device operation • LIN synch break detection • LIN synch break generation • Detection of LIN synch field start/stop edges connected to the 8/16-bit composite timer
Synchronous serial clock	Continuous output to the SCK pin enabled for synchronous communication using the start/stop bits
Clock delay option	Special synchronous clock mode for delaying the clock (used in Serial Peripheral Interface (SPI))

The LIN-UART operates in four different modes. The operating mode is selected by the MD0 and MD1 bits in the LIN-UART serial mode register (SMR). Operating mode 0 and operating mode 2 are used for bi-directional serial communication; operating mode 1 for master/slave communication; and operating mode 3 for LIN master/slave communication.

Table 15-2. LIN-UART Operating Modes

Operating mode		Data length		Synchronous method	Stop bit length	Data bit format
		No parity	With parity			
0	Normal mode	7 bits or 8 bits		Asynchronous	1 bit or 2 bits	LSB first MSB first
1	Multiprocessor mode	7 bits or 8 bits +1*	-	Asynchronous		
2	Normal mode	8 bits		Synchronous	None, 1 bit, 2 bits	
3	LIN mode	8 bits	-	Asynchronous	1 bit	LSB first

- : Unavailable
* : "+1" is the address/data select bit (AD) used for communication control in multiprocessor mode.

The MD0 and MD1 bits in the LIN-UART serial mode register (SMR) are used to select the following LIN-UART operating modes.

Table 15-3. LIN-UART Operating Modes

MD1	MD0	Operating mode	Type
0	0	0	Asynchronous (Normal mode)
0	1	1	Asynchronous (Multiprocessor mode)
1	0	2	Synchronous (Normal mode)
1	1	3	Asynchronous (LIN mode)

- Operating mode 1 supports both master and slave operation for the multiprocessor mode.
- The communication format of operating mode 3 is fixed: 8-bit data, no parity, stop bit 1, LSB-first.

15.2 Configuration

LIN-UART is made up of the following blocks.

- Reload counter
- Receive control circuit
- Receive shift register
- LIN-UART receive data register (RDR)
- Transmit control circuit
- Transmit shift register
- LIN-UART transmit data register (TDR)
- Error detection circuit
- Oversampling circuit
- Interrupt generation circuit
- LIN synch break/synch field detection circuit
- Bus idle detection circuit
- LIN-UART serial control register (SCR)
- LIN-UART serial mode register (SMR)
- LIN-UART serial status register (SSR)
- LIN-UART extended status control register (ESCR)
- LIN-UART extended communication control register (ECCR)

15.2.1 Block Diagram of LIN-UART

Figure 15-1. Block Diagram of LIN-UART

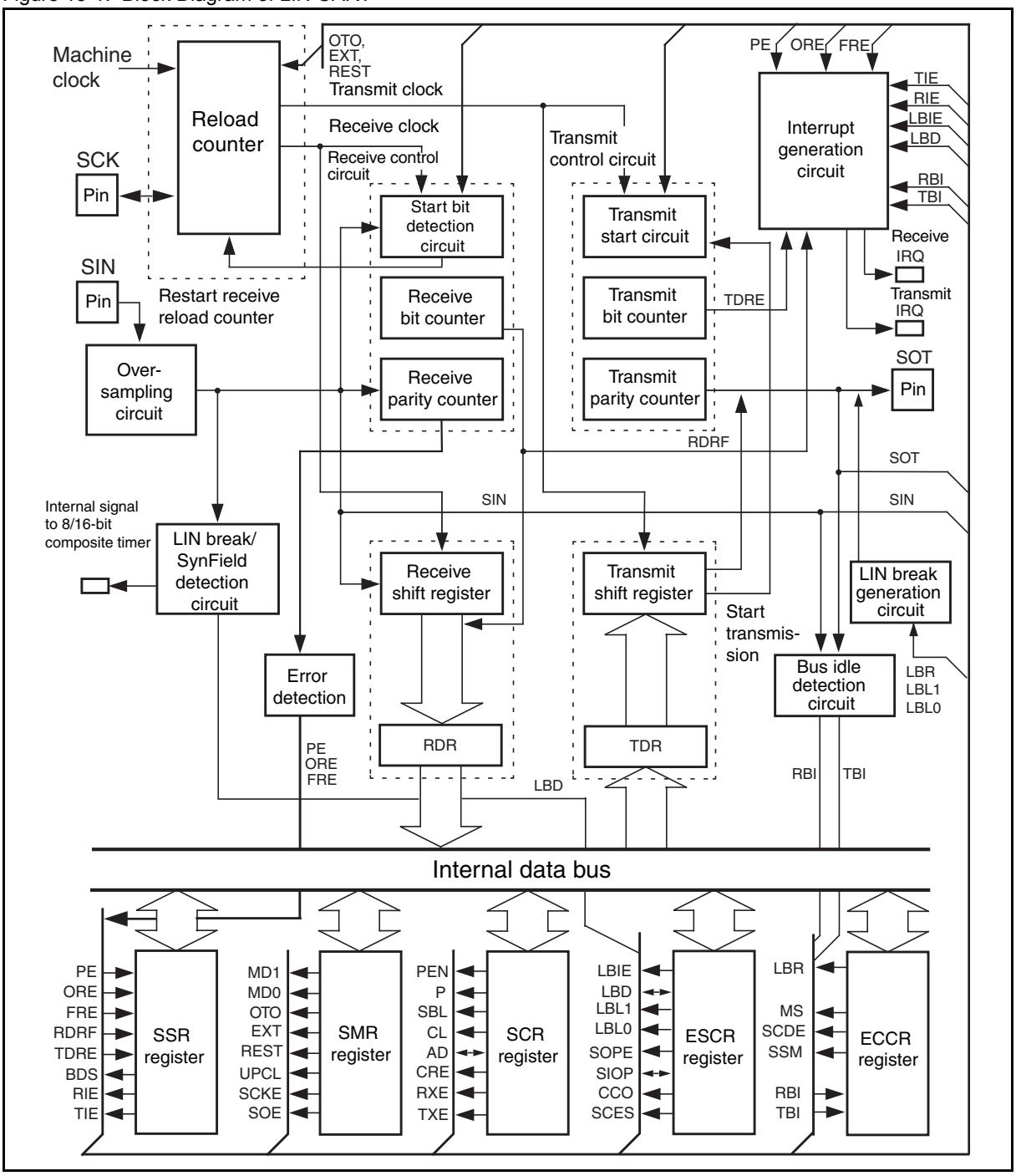

- Reload counter

This block is a 15-bit reload counter functioning as a dedicated baud rate generator. The block consists of a 15-bit register for reload values; it generates the transmit/receive clock from the external or internal clock. The count value in the transmit reload counter is read from the baud rate generator1, 0 (BGR1 and BGR0).

- Receive control circuit

This block consists of a receive bit counter, a start bit detection circuit, and a receive parity counter. The receive bit counter counts the receive data bits and sets a flag in the LIN-UART receive data register when the reception of one data is completed according to the specified data length. If the receive interrupt has been enabled, a receive interrupt request is made. The start bit detection circuit detects a start bit in a serial input signal. When a start bit is detected, the circuit sends a signal to the reload counter in synchronization with the start bit falling edge. The receive parity counter calculates the parity of the received data.

- Receive shift register

The circuit captures received data from the SIN pin while performing bit shifting of received data. The receive shift register transfers received data to the RDR register.

- LIN-UART receive data register (RDR)

This register retains the received data. Serial input data is converted and stored in the LIN-UART receive data register.

- Transmit control circuit

This block consists of a transmit bit counter, a transmit start circuit, and a transmit parity counter. The transmit bit counter counts the transmit data bits and sets a flag in the transmit data register when the transmission of one data is completed according to the specified data length. If the transmit interrupt has been enabled, a transmit interrupt request is made. The transmit start circuit starts transmission when data is written to the TDR. The transmit parity counter generates a parity bit for data to be transmitted if the data has a parity.

- Transmit shift register

Data written to the LIN-UART transmit data register (TDR) is transferred to the transmit shift register, and then the transmit shift register outputs the data to the SOT pin while performing bit shifting of the data.

- LIN-UART transmit data register (TDR)

This register sets the transmit data. Data written to this register is converted to serial data and then output.

- Error detection circuit

This circuit detects errors occurring at the end of reception. If an error occurs, a corresponding error flag is set.

- Oversampling circuit

In asynchronous mode, the oversampling circuit oversamples received data for five times to determine the received value by majority of sampling values. The circuit stops operating in synchronous mode.

- Interrupt generation circuit

This circuit controls all interrupt sources. An interrupt is generated immediately provided that the corresponding interrupt enable bit has been set.

- LIN synch break/synch field detection circuit

This circuit detects a LIN synch break when the LIN master node transmits a message header. The LBD flag is set when the LIN synch break is detected. An internal signal is output to 8/16-bit composite timer in order to detect the first and the fifth falling edges of the LIN synch field and to measure the actual serial clock synchronization transmitted by the master node.

- LIN synch break generation circuit

This circuit generates a LIN synch break with a length set.

- Bus idle detection circuit

If this circuit detects that no transmission or reception is in progress, it sets the TBI flag bit or the RBI flag bit to "1" respectively.

- LIN-UART serial control register (SCR)

Its operating functions are as follows:

1. Setting the use of the parity bit
2. Parity bit select
3. Setting stop bit length
4. Setting data length
5. Selecting the frame data format in operating mode 1
6. Clearing the error flag
7. Enabling/disabling transmission
8. Enabling/disabling reception

- LIN-UART serial mode register (SMR)

Its operating functions are as follows:

1. Selecting the LIN-UART operating mode
2. Selecting the clock input source
3. Selecting between one-to-one connection to the external clock and connection to the reload counter
4. Resetting the dedicated reload timer
5. LIN-UART software reset (maintaining register settings)
6. Enabling/disabling output to the serial data pin
7. Enabling/disabling output to the clock pin

- LIN-UART serial status register (SSR)

Its operating functions are as follows:

1. Checking transmission/reception or error status
2. Selecting the transfer direction (LSB-first or MSB-first)
3. Enabling/disabling receive interrupts
4. Enabling/disabling transmit interrupts

- Extended status control register (ESCR)

Its operating functions are as follows:

1. Enabling/disabling LIN synch break interrupts
2. LIN synch break detection
3. Selecting LIN synch break length
4. Direct access to SIN pin and SOT pin
5. Setting continuous clock output in LIN-UART synchronous clock mode
6. Sampling clock edge selection

- LIN-UART extended communication control register (ECCR)

Its operating functions are as follows:

1. Bus idle detection
2. Synchronous clock setting
3. LIN synch break generation

15.2.2 Input Clock

The LIN-UART uses a machine clock or an input signal from the SCK pin as an input clock.

The input clock is used as the transmission/reception clock source of the LIN-UART.

15.3 Pins

This section describes the pins of the LIN-UART.

15.3.1 Pins of LIN-UART

The pins of the LIN-UART are also used as general-purpose ports. Table 15-4. lists the LIN-UART pin functions and settings for using them.

Table 15-4. Pins of LIN-UART

Pin name	Pin function	Settings required for using pin
SIN	Serial data input	Set to the input port (DDR:corresponding bit = 0)
SOT	Serial data output	Enable output. (SMR:SOE = 1)
SCK	Serial clock input/output	Set to the input port when this pin is used for clock input. (DDR:corresponding bit = 0)
		Enable output when this pin is used as an clock output pin. (SMR:SCKE = 1)

15.4 Interrupts

The LIN-UART has receive interrupts and transmit interrupts, which are generated by the following sources. An interrupt number and an interrupt vector are assigned to each interrupt. In addition, it has a LIN synch field edge detection interrupt function using the 8/16-bit composite timer interrupt.

- Receive interrupt
  A receive interrupt occurs when received data is set in the LIN-UART receive data register (RDR), or when a receive error occurs, or when a LIN synch break is detected.
- Transmit interrupt
  A transmit interrupt occurs when transmit data is transferred from the LIN-UART transmit data register (TDR) to the transmit shift register, and data transmission starts.

15.4.1 Receive Interrupt

Table 15-5 shows the control bits and interrupt sources of receive interrupts.

Table 15-5. Interrupt Control Bits and Interrupt Sources of Receive Interrupts

Interrupt request flag bit	Flag register	Operating mode				Interrupt source	Interrupt source enable bit	Interrupt request flag clear
		0	1	2	3			
RDRF	SSR	❍	❍	❍	❍	Writing received data to RDR	SSR:RIE	Read received data
ORE	SSR	❍	❍	❍	❍	Overrun error		Write "1" to receive error flag clear bit (SCR:CRE)
FRE	SSR	❍	❍	Δ	❍	Framing error		
PE	SSR	❍	×	Δ	×	Parity error		
LBD	ESCR	×	×	×	❍	LIN synch break detection	ESCR:LBIE	Write "0" to ESCR:LBD

❍ : Bit to be used
× : Unused bit
Δ : Usable only when ECCR:SSM = 1

15.4.1.1 Receive interrupts

If one of the following operations occurs in reception mode, the bit in the LIN-UART serial status register (SSR) corresponding to that operation is set to "1".

- Data reception completed

Received data is transferred from the LIN-UART serial input shift register to the LIN-UART receive data register (RDR) (RDRF = 1).

- Overrun error

With RDRF = 1, the next serial data is received while the CPU has not read the RDR register. (ORE = 1).

- Framing error

A stop bit reception error occurs (FRE = 1).

- Parity error

A parity detection error occurs (PE = 1).

A receive interrupt request is made if the receive interrupt has been enabled (SSR:RIE = 1) when one of the above flag bits is "1".

RDRF flag is automatically cleared to "0" if the LIN-UART receive data register (RDR) is read. All of the error flags are cleared to "0" if "1" is written to the receive error flag clear bit (CRE) in the LIN-UART serial control register (SCR).

15.4.1.2 LIN synch break interrupts

In operating mode 3, the LIN synch break interrupt functions when the LIN-UART performs LIN slave operation.

The LIN synch break detection flag bit (LBD) in the LIN-UART extended status control register (ESCR) is set to "1" when the internal data bus (serial input) is "0" for 11 bits or longer. The LIN synch break interrupt and the LBD flag are cleared by writing "0" to the LBD flag. The LBD flag must be cleared before the 8/16-bit composite timer interrupt is generated within the LIN synch field.

To detect a LIN synch break, disable the reception (SCR:RXE = 0).

15.4.2 Transmit Interrupts

Table 15-6 shows the control bit and interrupt source of the transmit interrupt.

Table 15-6. Interrupt Control Bit and Interrupt Source of Transmit Interrupt

Interrupt request flag bit	Flag register	Operating mode				Interrupt source	Interrupt source enable bit	Interrupt request flag clear
		0	1	2	3			
TDRE	SSR	❍	❍	❍	❍	Transmit register is empty	SSR:TIE	Write transmit data
❍: Bit to be used								

- Transmit interrupts

The transmit data register empty flag bit (TDRE) in the LIN-UART serial status register (SSR) is set to "1" when the transmit data is transferred from the LIN-UART transmit data register (TDR) to the transmit shift register, and data transmission starts. In this case, if the transmit interrupt has been enabled (SSR:TIE = 1), a transmit interrupt request is made.

Note:

Since the initial value of the TDRE bit is "1" after a hardware reset/software reset, if the TIE bit is set to "1" after a hardware reset/software reset, an interrupt is generated immediately. The TDRE bit is cleared only by writing data to the LIN-UART transmit data register (TDR).

15.4.3 LIN Synch Field Edge Detection Interrupt (8/16-bit Composite Timer Interrupt)

Table 15-7 shows the control bits and interrupt sources of the LIN synch field edge detection interrupt.

Table 15-7. Interrupt Control Bits and Interrupt Sources of LIN Synch Field Edge Detection Interrupt

Interrupt request flag bit	Flag register	Operating mode				Interrupt source	Interrupt source enable bit	Interrupt request flag clear
		0	1	2	3			
IR	Tn0CR1	×	×	×	m	First falling edge of the LIN synch field	Tn0CR1:IE	Write "0" to Tn0CR1:IR
IR	Tn0CR1	×	×	×	m	Fifth falling edge of the LIN synch field		
❍ : Bit to be used × : Unused bit								

- LIN synch field edge detection interrupt (8/16-bit composite timer interrupt)

In operating mode 3, the LIN synch field edge detection interrupt functions when the LIN-UART performs LIN slave operation.

After a LIN synch break is detected, the internal signal (LSYN) is set to "1" at the first falling edge of the LIN synch field, and set to "0" after the fifth falling edge. Between both falling edges, a 8/16-bit composite timer interrupt is generated, provided that the 8/16-bit composite timer has been configured to receive internal signals and detect rising edges and falling edges and the 8/16-bit composite interrupt has been enabled.

The difference in the count values detected by the 8/16-bit composite timer (see Figure 15-2.) is equivalent to eight bits of the master serial clock. A new baud rate can be calculated from this value. After set, a new baud rate becomes effective from the falling edge detected at the next start bit set.

Figure 15-2. Baud Rate Calculation by 8/16-bit Composite Timer

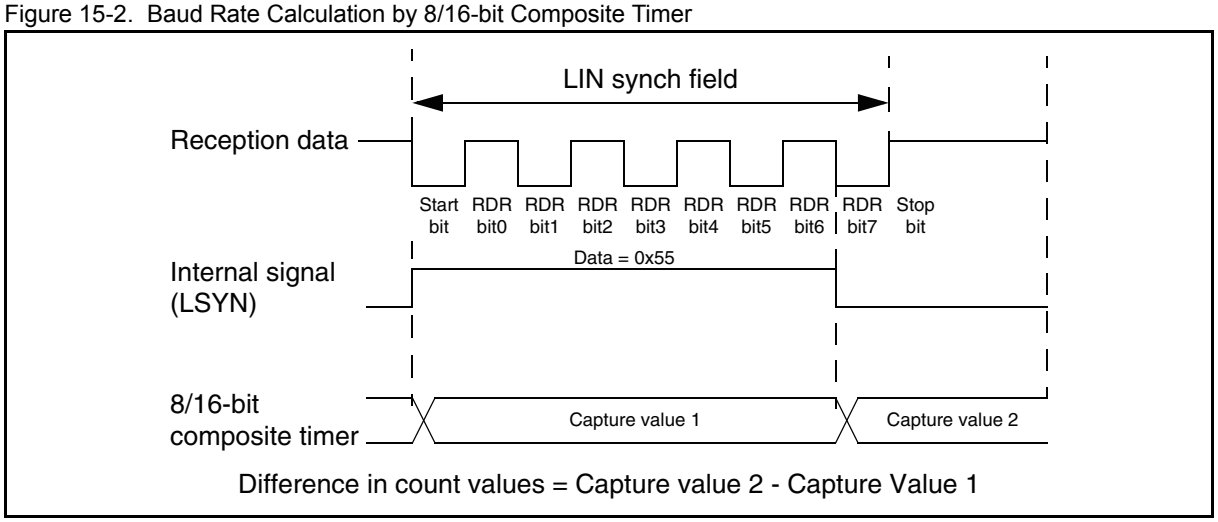

15.4.4 Timing of Receive Interrupt Generation and Flag Set

A receive interrupt is generated when reception is completed (SSR:RDRF) or when a reception error occurs (SSR:PE, ORE, FRE).

15.4.4.1 Timing of Receive Interrupt Generation and Flag Set

Received data is stored in the LIN-UART receive data register (RDR) when the first stop bit is detected in operating mode 0/1/2(SSM = 1)/3, or when the last data bit is detected in operating mode 2 (SSM = 0). When reception is completed (SSR:RDRF = 1), or when a reception error occurs (SSR:PE, ORE, FRE = 1), an error flag corresponding to one of the events mentioned above is set. If the receive interrupt has been enabled (SSR:RIE = 1) when an error flag is set, a receive interrupt is generated.

Note:

In all operating modes, when a receive error occurs, data in the LIN-UART receive data register (RDR) becomes invalid.

Figure 15-3 shows the timing of reception and flag set.

Figure 15-3. Timing of Reception and Flag Set

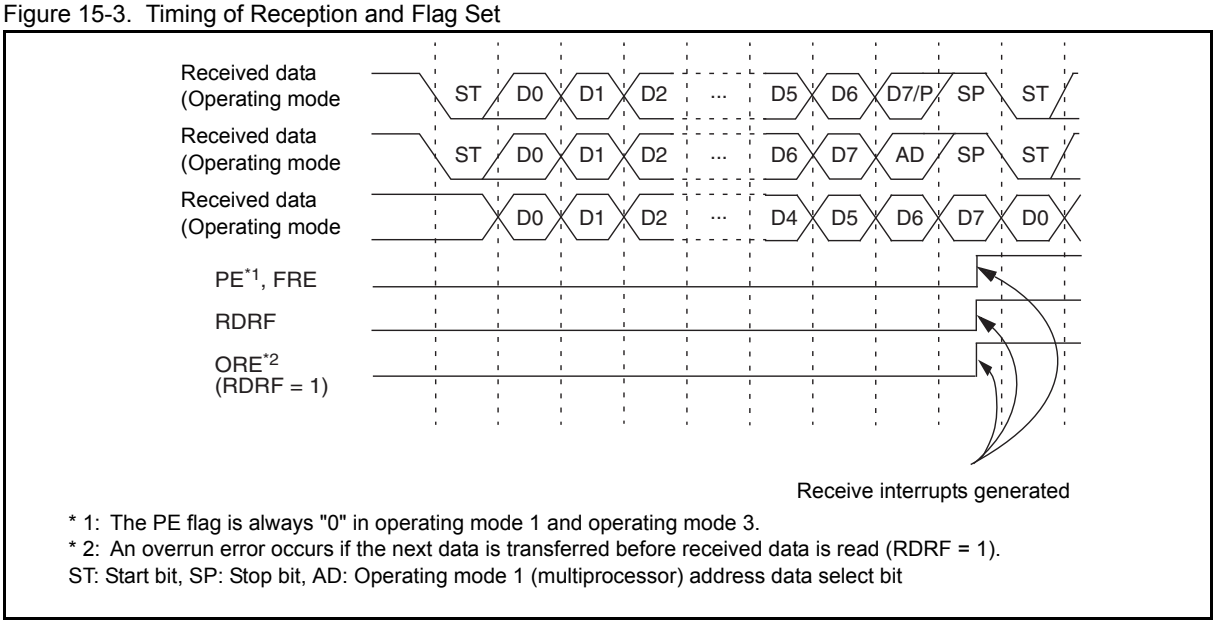

* 1: The PE flag is always "0" in operating mode 1 and operating mode 3.
* 2: An overrun error occurs if the next data is transferred before received data is read (RDRF = 1).
ST: Start bit, SP: Stop bit, AD: Operating mode 1 (multiprocessor) address data select bit

Note:

Figure 15-3 does not show all reception operations in mode 0. It only shows two examples of reception operations using different communication formats. One reception operation uses 7-bit data, a parity bit (parity bit = "even parity" or "odd parity") and one stop bit. The other uses 8-bit data, no parity bit and one stop bit.

Figure 15-4. ORE Flag Set Timing

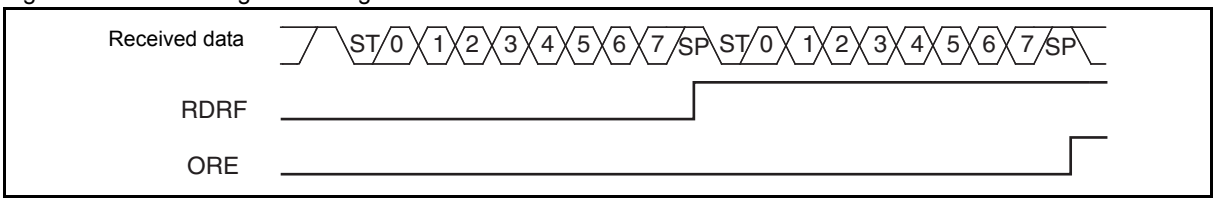

15.4.5 Timing of Transmit Interrupt Generation and Flag Set

A transmit interrupt is generated when transmit data is transferred from the LIN-UART transmit data register (TDR) to the transmit shift register and then data transmission starts.

15.4.6 Timing of Transmit Interrupt Generation and Flag Set

When the data written to the LIN-UART transmit data register (TDR) is transferred to the transmit shift register and the transmission of that data starts, the next data can be written to the TDR register (SSR:TDRE = 1). At the start of the data transmission, if the transmit interrupt has been enabled (SSR:TIE = 1), a transmit interrupt is generated.

The TDRE bit is a read-only bit, and is cleared to "0" only when data is written to the LIN-UART transmit data register (TDR).

Figure 15-5 shows the timing of transmission and flag set.

Figure 15-5. Timing of Transmission and Flag Set

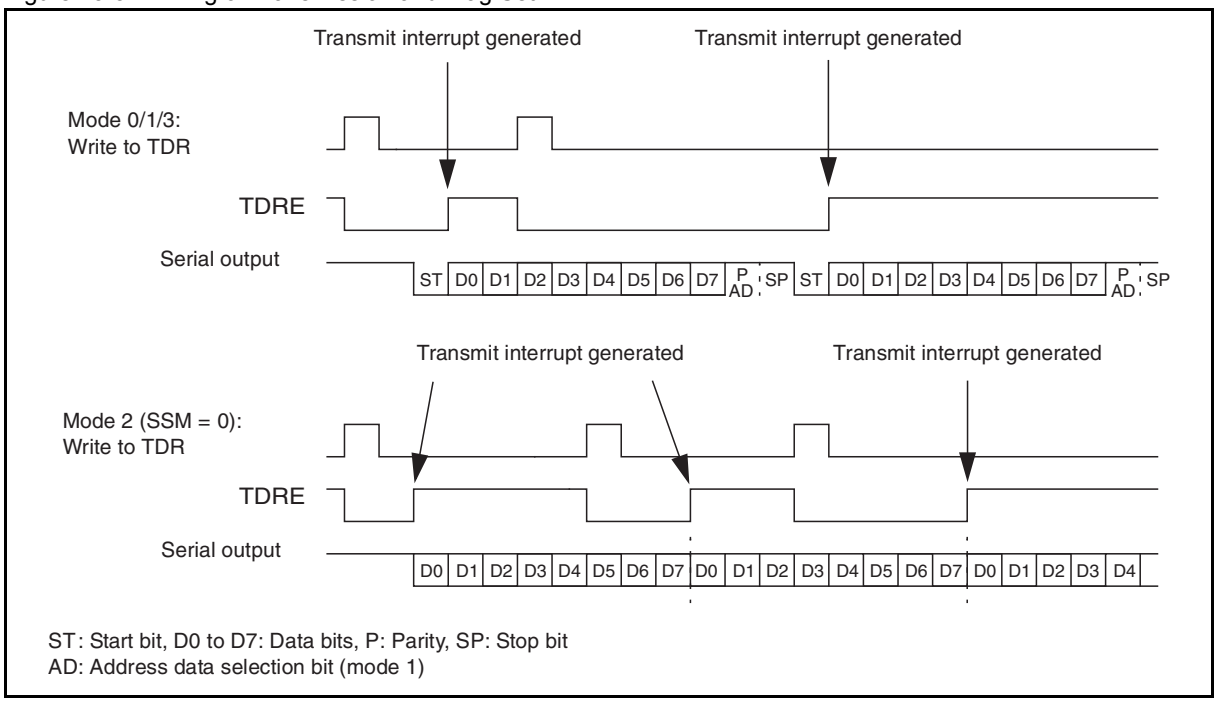

Note:

Figure 15-5 does not show all transmission operations in operating mode 0. It only shows an example of a transmission operation using 8-bit data, a parity bit ("even parity" or "odd parity") and one stop bit.

No parity bit is transmitted in operating mode 3, or in operating mode 2 with SSM = 0.

15.4.6.1 Transmit Interrupt Request Generation Timing

With the transmit interrupt having been enabled (SSR:TIE = 1), if the TDRE bit is set to "1", a transmit interrupt is generated.

Note:

Since the initial value of the TDRE bit is "1", a transmit interrupt is generated immediately after the transmit interrupt is enabled (SSR:TIE = 1). When deciding the timing of enabling the transmit interrupt, take into consideration that the TDRE bit can be cleared only by writing new data to the LIN-UART transmit data register (TDR).

For interrupt request numbers and vector table addresses of respective peripheral functions, refer to "Interrupt Source Table" in the device data sheet.

15.5 LIN-UART Baud Rate

The input clock (transmit/receive clock source) of the LIN-UART can be selected from one of the following:

- Input a machine clock to a baud rate generator (reload counter).
- Input an external clock to a baud rate generator (reload counter).
- Use an external clock (SCK pin input clock) directly.

15.5.1 LIN-UART Baud Rate Selection

The baud rate can be selected from one of following three types. 15.5.2 Baud Rate Setting shows the baud rate selection circuit.

- Baud rate derived from the internal clock divided by the dedicated baud rate generator (reload counter)

There are two internal reload counters, corresponding to the transmit serial clock and the receive serial clock respectively.
The baud rate is selected by setting a 15-bit reload value in the LIN-UART baud rate generator registers 1, 0 (BGR1, BGR0).
The reload counter divides the internal clock by the value set in BGR1 and BGR0.
The baud rate is used in asynchronous mode and in synchronous mode (transmit side of the serial clock).
As for clock source settings, select the internal clock and use the baud generator clock (SMR:EXT = 0, OTO = 0).

- Baud rate derived from the external clock divided by the dedicated baud rate generator (reload counter)

The external clock is used as the clock source for the reload counter.
The baud rate is selected by setting a 15-bit reload value in the LIN-UART baud rate generator registers 1, 0 (BGR0, BGR1).
The reload counter divides the external clock by the value set in BGR1 and BGR0.
The baud rate is used in asynchronous mode.
As for clock source settings, select the external clock and use the baud generator clock (SMR:EXT = 1, OTO = 0).

- Baud rate by the external clock (one-to-one mode)

The clock input from the clock input pin (SCK) of the LIN-UART is used as the baud rate (slave operation in operating mode 2 (synchronous) (ECCR:MS = 1)).
It is used in synchronous mode (serial clock reception side).
As for clock source settings, select the external clock and its direct use (SMR:EXT = 1, OTO = 1).

Figure 15-6. LIN-UART Baud Rate Selection Circuit

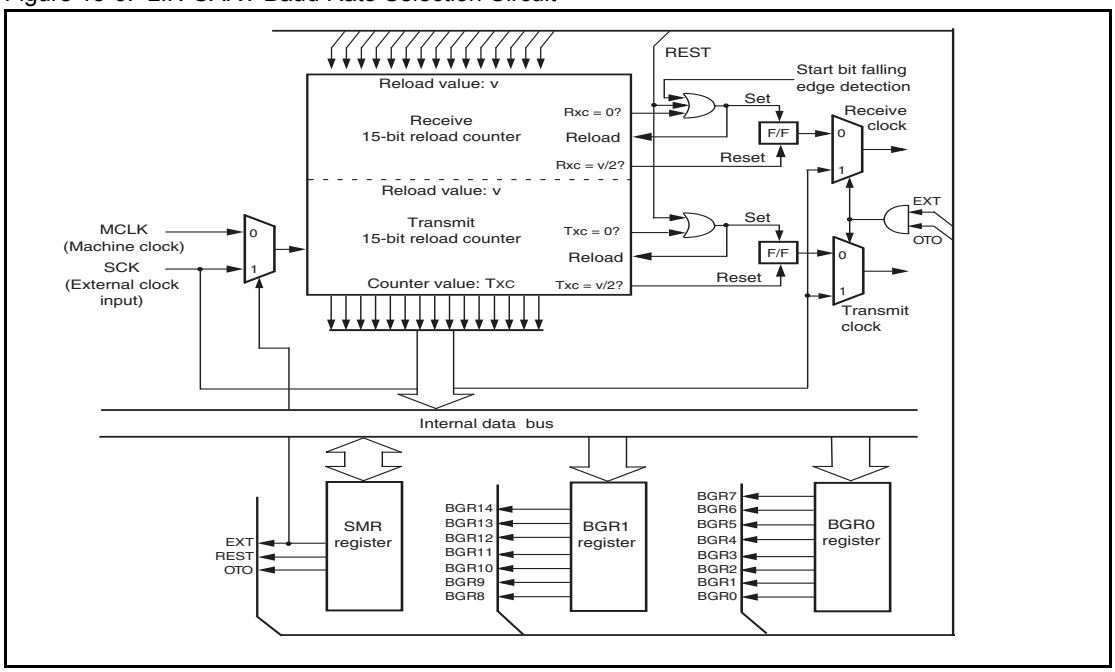

15.5.2 Baud Rate Setting

This section shows baud rate settings and the result of calculating the serial clock frequency.

15.5.2.1 Baud Rate Calculation

The two 15-bit reload counters are set by the LIN-UART baud rate generator registers 1, 0 (BGR1, BGR0).

The equation for the baud is shown below.

Reload value:

$$v = \left(\frac{MCLK}{b}\right) - 1$$

v: Reload value, b: Baud rate, MCLK: Machine clock, or external clock frequency

Calculation example

Assuming that the machine clock is 10 MHz, the internal clock is used, and the baud rate is set to 19200 bps:

Reload value:

$$v = \left(\frac{10 \times 10^6}{19200}\right) - 1 = 519.83... \approx 520$$

Thus, the actual baud rate can be calculated as shown below.

$$b = \frac{MCLK}{(v + 1)} = \frac{10 \times 10^6}{521} = 19193.8579$$

Note:

The reload counter stops if the reload value is set to "0". Therefore, set the smallest reload value to "1".

For transmission/reception in asynchronous mode, since five times of oversampling have to be done before the reception value is determined, set the reload value to at least "4".

Reload Value and Baud Rate of Each Clock Speed

Table 15-8 shows the reload value and baud rate of each clock speed.

Table 15-8. Reload Value and Baud Rate

Baud rate	8 MHz (MCLK)		10 MHz (MCLK)		16 MHz (MCLK)		16.25 MHz (MCLK)	
	Reload value	Frequency deviation	Reload value	Frequency deviation	Reload value	Frequency deviation	Reload value	Frequency deviation
2M	-	-	4	0	7	0	-	-
1M	7	0	9	0	15	0	-	-
500000	15	0	19	0	31	0	-	-
400800	-	-	-	-	-	-	-	-
250000	31	0	39	0	63	0	64	0
230400	-	-	-	-	68	- 0.64	-	-
153600	51	- 0.16	64	- 0.16	103	- 0.16	105	0.19
125000	63	0	79	0	127	0	129	0
115200	68	- 0.64	86	0.22	138	0.08	140	- 0.04
76800	103	0.16	129	0.16	207	- 0.16	211	0.19
57600	138	0.08	173	0.22	277	0.08	281	- 0.04
38400	207	0.16	259	0.16	416	0.08	422	- 0,04
28800	277	0.08	346	- 0.06	555	0.08	563	- 0.04
19200	416	0.08	520	0.03	832	- 0.04	845	- 0.04
10417	767	< 0.01	959	< 0.01	1535	< 0.01	1559	< 0.01
9600	832	- 0.04	1041	0.03	1666	0.02	1692	0.02
7200	1110	< 0.01	1388	< 0.01	2221	< 0.01	2256	< 0.01
4800	1666	0.02	2082	- 0.02	3332	< 0.01	3384	< 0.01
2400	3332	< 0.01	4166	< 0.01	6666	< 0.01	6770	< 0.01
1200	6666	< 0.01	8334	< 0.01	13332	< 0.01	13541	< 0.01
600	13332	< 0.01	16666	< 0.01	26666	< 0.01	27082	< 0.01
300	26666	< 0.01	-	-	53332	< 0.01	54166	< 0.01

The unit of frequency deviation is %. MCLK represents machine clock.

External Clock

The external clock is selected by writing "1" to the EXT bit in the LIN-UART serial mode register (SMR). In the baud rate generator, the external clock can be used in the same way as the internal clock.

When slave operation is used in operating mode 2 (synchronous), select the one-to-one external clock input mode (SMR:OTO = 1). In this mode, the external clock input to SCK is input directly to the LIN-UART serial clock.

Note:

The external clock signal is synchronized with the internal clock (MCLK: machine clock) in the LIN-UART. Therefore, if the external clock becomes not divisible because its cycle is faster than half the cycle of the internal clock, the external clock

signal becomes unstable. For the value of the SCK clock, refer to the data sheet of this microcontroller.

Operation of Dedicated Baud Rate Generator (Reload Counter)

Figure 15-7 shows the operation of two reload counters using a reload value "832" as an example.

Figure 15-7. Operation of Dedicated Baud Rate Generator (Reload Counter)

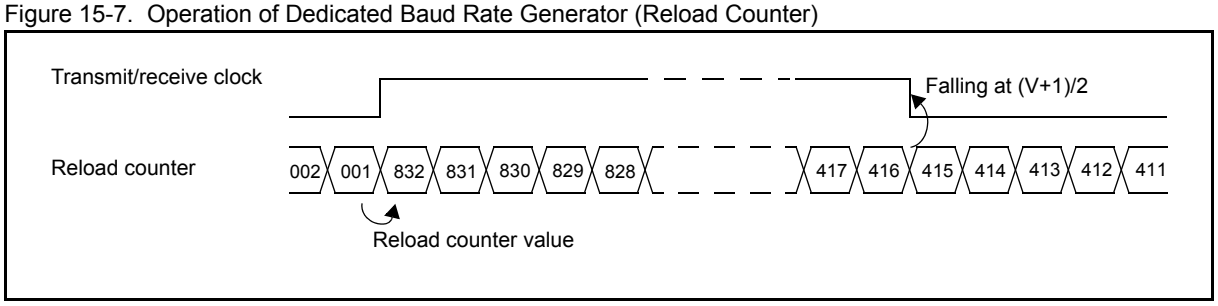

Note:

The falling edge of the serial clock signal is generated after the reload value divided by 2 [(V+1)/2] is counted.

15.5.3 Reload Counter

This block is a 15-bit reload counter functioning as a dedicated baud rate generator. It generates the transmit/receive clock from the external clock or internal clock.

The count value in the transmit reload counter can be read from the LIN-UART baud rate generator registers 1, 0 (BGR1 and BGR0).

15.5.3.1 Functions of Reload Counter

There are two types of reload counter, the transmit reload counter and the receive reload counter. The reload counter functions as a dedicated baud rate generator. It consists of a 15-bit register for a reload value and generates the transmit/receive clock from the external clock or internal clock. The count value in the transmit reload counter can be read from the LIN-UART baud rate generator registers 1, 0 (BGR1 and BGR0).

- Start of counting

Writing a reload value to the LIN-UART baud rate generator registers 1, 0 (BGR1, BGR0) causes the reload counter to start counting.

- Restart

The reload counter restarts under the following conditions.

For both transmit/receive reload counters

1. LIN-UART programmable reset (SMR:UPCL bit)
2. Programmable restart (SMR:REST bit)

For the receive reload counter

3. Detection of a start bit falling edge in asynchronous mode

- Simple timer function

If the REST bit in LIN-UART serial mode register (SMR) is set to "1", the two reload counters restart at the next clock cycle.

This function enables the transmit reload counter to be used as a simple timer.

Figure 15-8 shows an example of using this function (when the reload value is 100).

Figure 15-8. Example of Using a Simple Timer by Restarting the Reload Timer

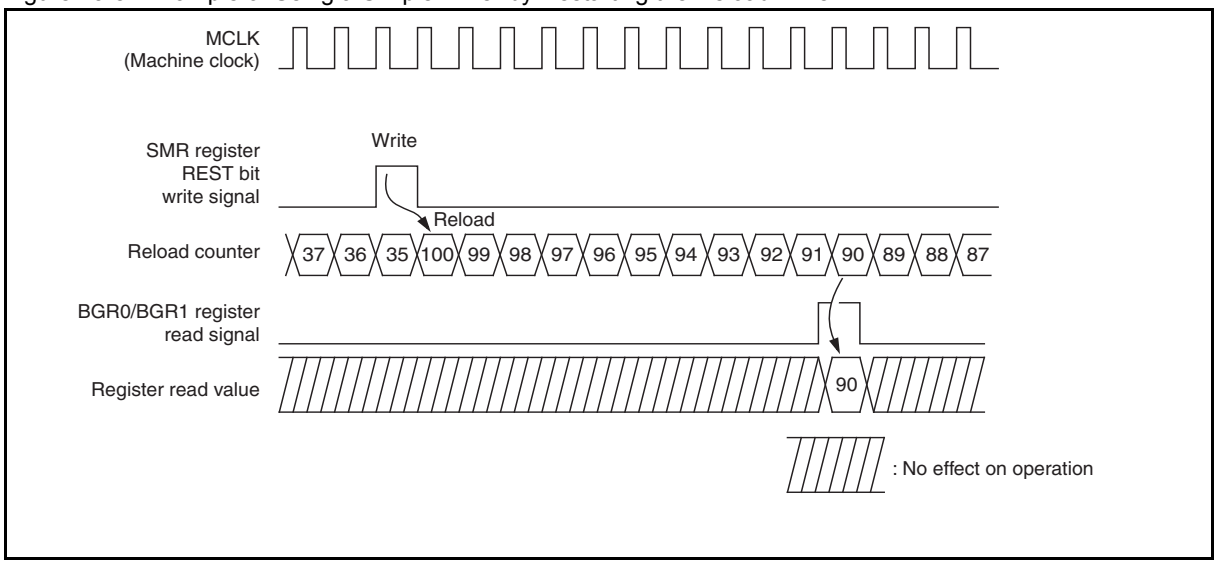

The number of machine clock cycles "cyc" after the restart in this example is obtained by the following equation.

cyc = v - c + 1 = 100 - 90 + 1 = 11

v: Reload value, c: Reload counter value

Note:
The transmit reload counter restarts also when the LIN-UART is reset by writing "1" to the SMR:UPCL bit.

Automatic restart (receive reload counter only)

The receive reload counter restarts when the start bit falling edge is detected in asynchronous mode. This automatic restart function is to synchronize the receive shift register with the received data.

- Clear counter

When a reset occurs, the reload values in the LIN-UART baud rate generator registers 1, 0 (BGR1, BGR0) and the reload counter are cleared to "0x00", and the reload counter stops.

Although the counter value is temporarily cleared to "0x00" by the LIN-UART reset (writing "1" to SMR:UPCL), the reload counter restarts since the reload value is kept.

If the restart setting is used (writing "1" to SMR:REST), the reload counter restarts without the counter value being cleared to "0x00".

15.6 Operations of LIN-UART and LIN-UART Setting Procedure Example

The LIN-UART performs bi-directional serial communication in operating mode 0/2, master/slave communication in operating mode 1, LIN master/slave communication in operating mode 3.

15.6.1 Operations of LIN-UART

- Operating mode

The LIN-UART has four operating modes (0 to 3), providing different connection methods between CPUs and different data transfer methods as shown in Table 15-9.

Table 15-9. LIN-UART Operating Modes

Operating mode		Data length		Synchronous method	Stop bit length	Data bit format
		No parity	With parity			
0	Normal mode	7 bits or 8 bits		Asynchronous	1 bit or 2 bits	LSB first MSB first
1	Multiprocessor mode	7 bits or 8 bits +1*	-	Asynchronous		
2	Normal mode	8 bits		Synchronous	None, 1 bit, 2 bits	
3	LIN mode	8 bits	-	Asynchronous	1 bit	LSB first

- : Unavailable
* : "+1" is the address/data select bit (AD) used for communication control in multiprocessor mode.

The MD0 and MD1 bits in the LIN-UART serial mode register (SMR) are used to select the following LIN-UART operating modes.

Table 15-10. LIN-UART Operating Modes

MD1	MD0	Mode	Type
0	0	0	Asynchronous (Normal mode)
0	1	1	Asynchronous (Multiprocessor mode)
1	0	2	Synchronous (Normal mode)
1	1	3	Asynchronous (LIN mode)

Notes:

- In operating mode 1, a system connecting to a master/slave supports both master operations and slave operations.
- In operating mode 3, the communication format is fixed at "8-bit data, no parity bit, one stop bit, LSB-first".
- If the operating mode is changed, all transmission operations and reception operations are canceled, and the LIN-UART waits for the next transmission/reception.

Inter-CPU Connection Method

The external clock one-to-one connection (normal mode) and the master/slave connection (multiprocessor mode) can be selected as an inter-CPU connection method. In either method, use the same data length, parity setting, synchronization type, etc. for CPUs. Select their operating modes as follows.

- One-to-one connection: Use either operating mode 0 or operating mode 2 for both CPUs. Select the operating mode 0 for asynchronous method or the operating mode 2 for synchronous method. In addition, in operating mode 2, set one CPU as the transmission side of serial clock and the other as the reception side of serial clock.
- Master/slave connection: Select operating mode 1. Use the CPU as a master/slave system.

Asynchronous/Synchronous Method

As for the asynchronous method, the receive clock is synchronized with the receive start bit falling edge. As for the synchronous method, the receive clock can be synchronized with the clock signal of the serial clock transmission side, or with the clock signal of the LIN-UART operating as the transmission side.

Signaling

NRZ (Non Return to Zero).

Enable Transmission/Reception

The LIN-UART uses the SCR:TXE bit and the SCR:RXE bit to control transmission and reception, respectively. Execute the following operations to disable transmission or reception.

- To disable reception while it is in progress: wait until reception ends, read the receive data register (RDR), then disable reception.
- To disable transmission while it is in progress: wait until transmission ends, then disable transmission.

Setting Procedure Example

Below is an example of procedure for setting the LIN-UART.

- Initial settings

1. Set the port input. (DDR)
2. Set the interrupt level. (ILR*)
3. Set the data format and enable transmission/reception. (SCR)
4. Select the operating mode and the baud rate, and enable pin output. (SMR)
5. Set the baud rate generators 1, 0. (BGR1,BGR0)

*: For details of the interrupt level setting register (ILR), refer to Chapter 5.Interrupts in this hardware manual and "Interrupt Source Table" in the device data sheet.

15.6.2 Operations in Asynchronous Mode (Operating Mode 0, 1)

When the LIN-UART is used in operating mode 0 (normal mode) or operating mode 1 (multiprocessor mode), the transfer method is asynchronous transfer.

15.6.2.1 Operations in Asynchronous Mode

- Transmit/receive data format

Transmit/receive data always begins with a start bit ("L" level), followed by a specified data bits length, and ends with at least one stop bit ("H" level).

The bit transfer direction (LSB-first or MSB-first) is determined by the BDS bit in the LIN-UART serial status register (SSR). When the parity bit is used, it is always placed between the last data bit and the first stop bit.

In operating mode 0, the data length can be 7 bits or 8 bits. The use of the parity can be selected. The stop bit length can also be selected from one and two.

In operating mode 1, the data length can be 7 bits or 8 bits. No parity is added while an address/data bit is added. The stop bit length can be selected from one and two.

Below is the equation for the bit length of a transmit/receive frame.

Length = 1 + d + p + s

(d = Number of data bits [7 or 8], p = parity [0 or 1],

s = Number of stop bits [1 or 2])

Figure 15-9 shows the transmit/receive data format in asynchronous mode (operating mode 0, 1).

Figure 15-9. iTransmit/Receive Data Format (Operating Mode 0, 1)

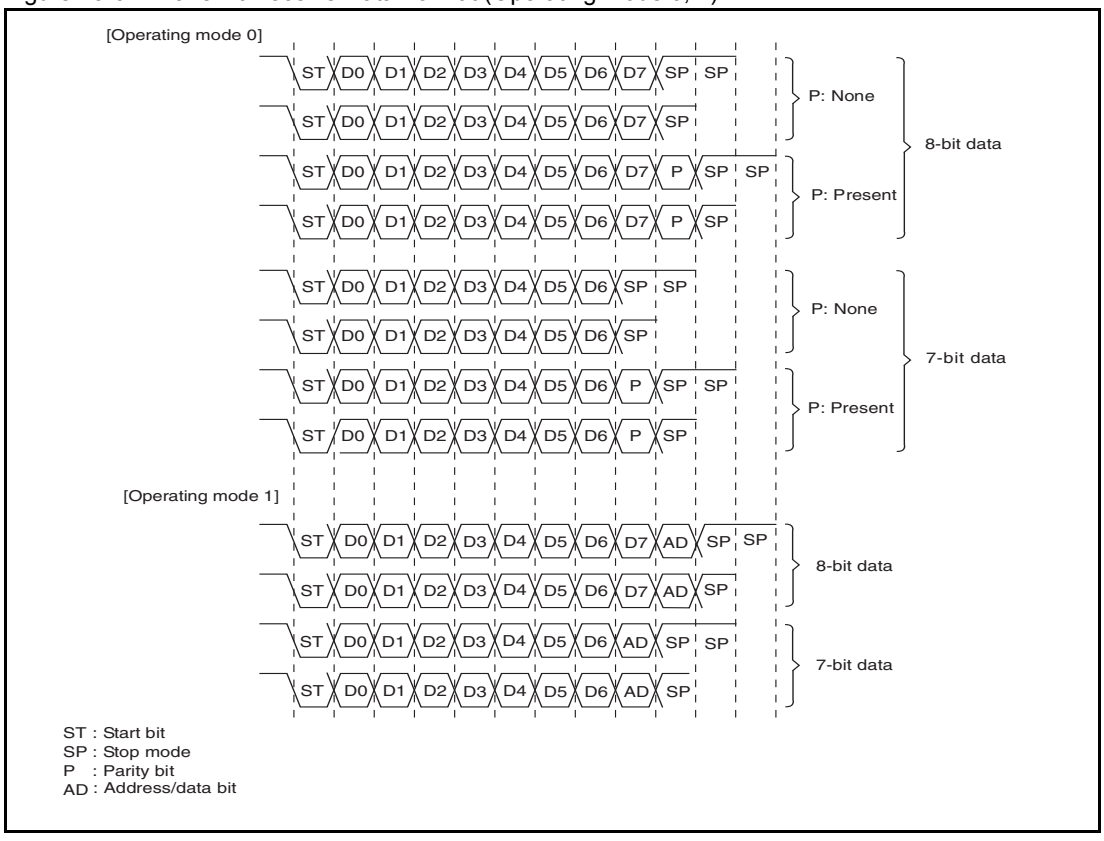

Note:

When the BDS bit in the LIN-UART serial status register (SSR) is set to "1" (MSB-first), the bits are processed in the following order: D7, D6, ... D1, D0 (P).

- Transmission

If the transmit data register empty flag bit (TDRE) in the LIN-UART serial status register (SSR) is "1", transmit data can be written to the LIN-UART transmit data register (TDR). Writing data sets the TDRE bit to "0". If transmission has been enabled (SCR:TXE = 1) when the TDRE bit is set to "0", the data written to TDR is written to the transmit shift register, and, in the next serial clock cycle, the transmission of the data is started from the start bit.

With the transmit interrupt having been enabled (TIE = 1), if transmit data is transferred from the LIN-UART transmit data register (TDR) to the transmit shift register, the TDRE bit is set to "1" and an interrupt is generated.

When the data length is set to 7 bits (CL = 0), bit7 in the TDR register becomes an unused bit regardless of the transfer direction select bit (BDS) setting (LSB-first or MSB-first).

Note:

Since the initial value of the transmit data register empty flag bit (SSR:TDRE) is "1", an interrupt is generated immediately when the transmit interrupt is enabled (SSR:TIE = 1).

- Reception

The reception is performed when reception is enabled (SCR:RXE = 1). When a start bit is detected, one frame data is received according to the data format defined in the LIN-UART serial control register (SCR). If an error occurs, an error flag (SSR:PE, ORE, FRE) is set. After the reception of one frame data ends, the received data is transferred from the receive shift register to the LIN-UART receive data register (RDR), and the receive data register full flag bit (SSR:RDRF) is set to "1". If the reception interrupt request has already been enabled (SSR:RIE = 1) at that time, a reception interrupt request is output.

To read the received data, first check the error flag status to ensure that reception has been executed normally, then read the data from the LIN-UART receive data register (RDR) if the reception is normal. If a reception error has occurred, perform error processing.

When the received data is read, the receive data register full flag bit (SSR:RDRF) is cleared.

When the data length is set to 7 bits (CL = 0), bit7 in the TDR register becomes an unused bit regardless of the transfer direction select bit (BDS) setting (LSB-first or MSB-first).

Note:

Data in the LIN-UART receive data register (RDR) becomes valid, provided that the receive data register full flag bit (SSR:RDRF) is set to "1" and no error has occurred (SSR:PE, ORE, FRE = 0).

- Input clock

Use the internal clock or the external clock. For the baud rate, select the baud rate generator (SMR:EXT = 0 or 1, OTO = 0).

- Stop bit and reception bus idle flag

For transmission, the number of stop bits can be selected from one and two. If two stop bits are selected, both stop bits are detected during reception.

When the first stop bit is detected, the receive data register full flag bit (SSR:RDRF) is set to "1". When no start bit is detected afterward, the receive bus idle flag bit (ECCR:RBI) is set to "1", indicating that no reception is executed.

- Error detection

In operating mode 0, the parity error, the overrun error and the frame error can be detected.

In operating mode 1, the overrun error and the frame error can be detected. However, the parity error cannot be detected.

- Parity

The addition (at transmission) of and the detection (during reception) of a parity bit can be set.

The parity enable bit (SCR:PEN) is used to select whether or not to use a parity; the parity select bit (SCR:P) is used to select the odd/even parity.

In operating mode 1, the parity cannot be used.

Figure 15-10. Transmission Data when Parity is Enabled

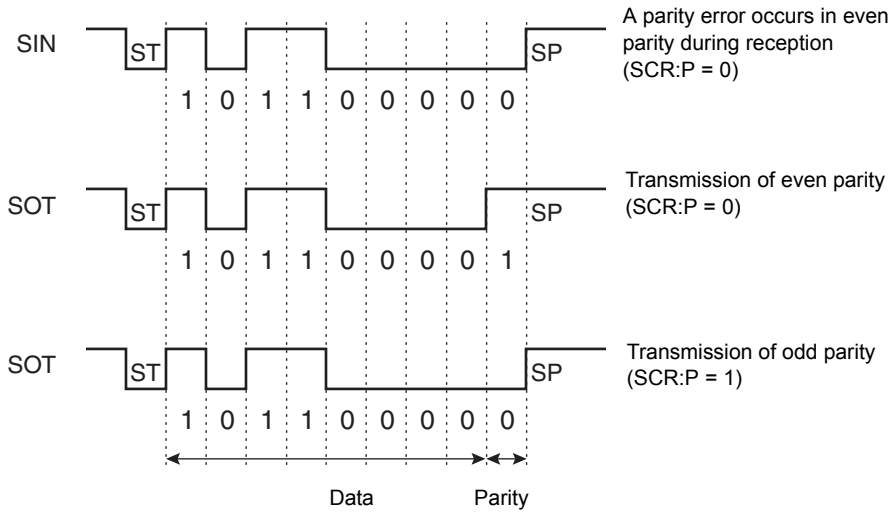

ST: Start bit, SP: Stop bit, Parity used (PEN = 1)
Note: In operating mode 1, the parity cannot be used.

- Data signaling

NRZ data format.

- Data bit transfer method

The data bit transfer method can be LSB-first transfer or MSB-first transfer.

15.6.3 Operations in Synchronous Mode (Operating Mode 2)

When the LIN-UART is used in operating mode 2 (normal mode), the transfer method is clock synchronous transfer.

15.6.3.1 Operations in Synchronous Mode (Operating Mode 2)

- Transmit/receive data format

In synchronous mode, 8-bit data is transmitted and received; the addition of the start bit and of the stop bit can be selected (ECCR:SSM). When the start/stop bits are added to the data format (ECCR:SSM = 1), the addition of the parity bit can also be selected (SCR:PEN).

Figure 15-11 shows the data format in synchronous mode (operating mode 2).

Figure 15-11. Transmit/Receive Data Format (Operating Mode 2)

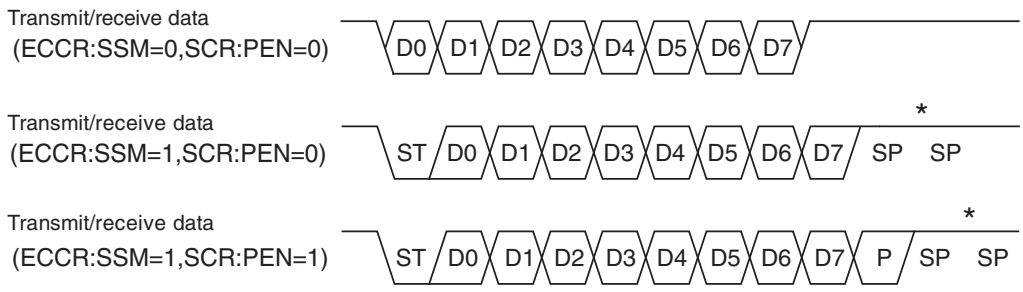

*: When two stop bits are used (SCR:SBL = 1)

ST: Start bit, SP: Stop bit, P: Parity bit Data bit transfer method: LSB-first

- Clock inversion function

When the SCES bit in the LIN-UART extended status control register (ESCR) is "1", the serial clock is inverted. In the case of serial clock reception side is selected, the LIN-UART samples data at the falling edge of the received serial clock. In the case of serial clock transmission side is selected, the mark level is set to "0" when the SCES bit is "1".

Figure 15-12. Transmission Data Format During Clock Inverted

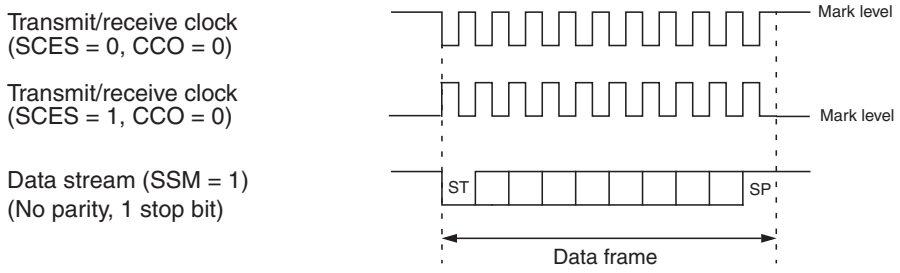

- Start/stop bits

When the SSM bit in the LIN-UART extended communication control register (ECCR) is "1", the start and stop bits are added to the data format as they are in asynchronous mode.

- Clock supply

In clock synchronous mode (normal), the number of transmit/receive data bits must be equal to the number of clock cycles. When the start/stop bits are enabled, the number of clock cycles must be equal to the sum of the transmit/receive data bits and the added start/stop bits.

With the serial clock transmission side having been selected (ECCR:MS = 0), when the serial clock output is enabled (SMR:SCKE = 1), a synchronous clock is automatically output during transmission/reception. When the serial clock reception side (ECCR:MS = 1) is selected or the serial clock output is disabled (SMR:SCKE = 0), clock cycles equal to the

number of transmit/receive data bits must be supplied from an external clock pin.

Keep the clock signal at the mark level ("H") if serial data is not related to transmission/reception.

- Clock delay

When the SCDE bit in the ECCR register is set to "1", a delayed transmit clock is output as shown in Figure 15-13. This function is required when the device on the reception side samples data at the rising edge or falling edge of the serial clock.

Figure 15-13. Transmit Clock Delay (SCDE = 1)

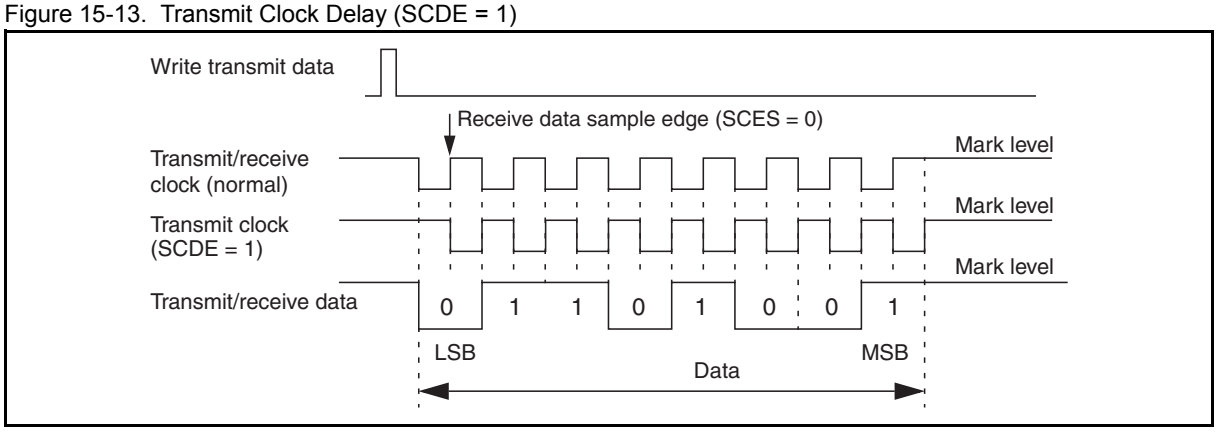

- Clock inversion

When the SCES bit in the LIN-UART extended status register (ESCR) is "1", the LIN-UART clock is inverted, and receive data is sampled at the falling edge of the LIN-UART clock. At that time, the value of the serial data must become valid at the edge of the LIN-UART clock.

- Continuous clock supply

When the CCO bit in the ESCR register is "1", the serial clock output from the SCK pin is continuously supplied on the serial clock transmission side. In this case, add the start bit and the stop bit to the data format (SSM = 1) in order to identify the beginning and end of the data frame. Figure 15-14 shows the operation of continuous clock supply (operating mode 2).

Figure 15-14. Continuous Clock Supply (Operating Mode 2)

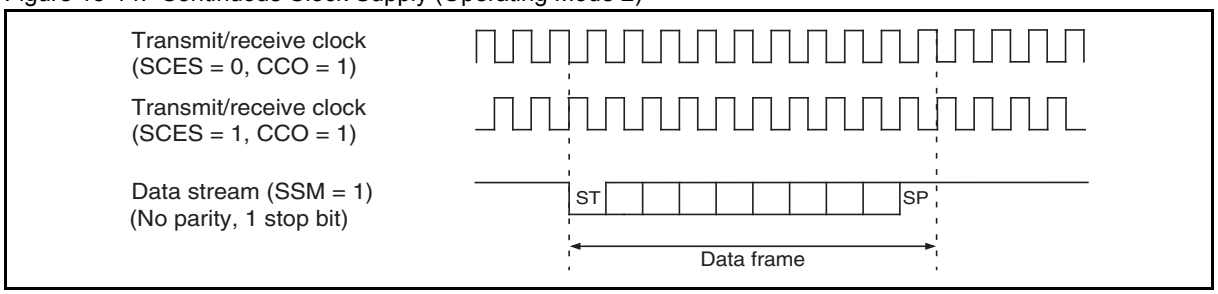

- Error detection

When the start bit and the stop bit are disabled (ECCR:SSM = 0), only overrun errors are to be detected.

- Communication settings for synchronous mode

To perform communications in synchronous mode, the following settings are required.

- LIN-UART baud rate generator registers 1, 0 (BGR1, BGR0)

  Set the dedicated baud rate reload counter to a required value.

- LIN-UART serial mode register (SMR)

  MD[1:0]: "0b10" (Operating mode 2)

  SCKE: "1"– Uses the dedicated baud rate reload counter

: "0"– Inputs an external clock

SOE: "1"– Enables transmission/reception

: "0"– Enables only reception

- LIN-UART serial control register (SCR)

  RXE, TXE: Set either bit to "1".

  AD: Since the address/data format selection function is not used, the value of this bit has no effect on operation.

  CL: Since the bit length is automatically set to 8 bits, the value of this bit has no effect on operation.

  CRE:"1": Clears the error flag in the SSR register.

  1.For SSM = 0:

  PEN, P, SBL: Since neither the parity bit nor the stop bit is used, the values of these three bits have no effect on operation.

  2.For SSM = 1:

  PEN: "1": Adds/detects parity bit, "0": Not use parity bit

  P: "1": Even parity, "0": Odd parity

  SBL: "1": Stop bit length 2, "0": Stop bit length 1

- LIN-UART serial status register (SSR)

  BDS:"0"– LSB-first,"1"– MSB-first

  RIE:"1"– Enables receive interrupts,"0"– Disables receive interrupts

  TIE:"1"– Enables transmit interrupts,"0"– Disables transmit interrupts

- LIN-UART extended communication control register (ECCR)

  SSM:"0"– Not use start/stop bits (normal),

  "1"– Uses start/stop bits (extended function),

  MS:"0"– Serial clock transmission side (serial clock output),

  "1"– Serial clock reception side (inputs serial clock from the device on the serial clock transmission side)

Note:

To start communication, write data to the LIN-UART transmit data register (TDR).

To receive data only, disable the serial output (SMR:SOE = 0), and then write dummy data to the TDR register.

Enabling continuous clock output and the start/stop bits enables bi-directional communication as that in asynchronous mode.

15.6.4 Operations of LIN function (Operating Mode 3)

In operating mode 3, the LIN-UART works as the LIN master and the LIN slave. In operating mode 3, the communication format is set to 8-bit data, no parity, stop bit 1, LSB first.

15.6.4.1 Asynchronous LIN Mode Operation

- Operation as LIN master

In LIN mode, the master determines the baud rate for the entire bus, and the slave synchronizes with the master.

Writing "1" to the LBR bit in the LIN-UART extended communication control register (ECCR) outputs 13 bits to 16 bits at the "L" level from the SOT pin. These bits are the LIN synch break indicating the beginning of a LIN message.

The TDRE bit in the LIN-UART serial status register (SSR) is then set to "0". After the LIN synch break, the TDRE bit is set to "1" (initial value). If the TIE bit in SSR is "1" at this time, a transmit interrupt is output.

The length of the LIN synch break transmitted is set by the LBL0/LBL1 bits in ESCR as shown in the following table.

Table 15-11. LIN Synch Break Length

LBL0	LBL1	Synch break length
0	0	13 bits
1	0	14 bits
0	1	15 bits
1	1	16 bits

A LIN synch field is transmitted as byte data 0x55 following a LIN synch break. To prevent the generation of a transmit interrupt, 0x55 can be written to the TDR after the LBR bit in ECCR is set to "1" even if the TDRE bit is "0".

- Operation as LIN slave

In LIN slave mode, synchronize the LIN-UART with the baud rate of the master. The LIN-UART generates a receive interrupt when LIN break interrupt is enabled (LBIE = 1) even though reception has been disabled (RXE = 0). The LBD bit in ESCR is set to "1" as a receive interrupt is generated.

Writing "0" to the LBD bit clears the receive interrupt request flag.

The calculation of baud rate is illustrated below using the operation of the LIN-UART as an example. When the LIN-UART detects the first falling edge of the synch field, set the internal signal to be input to the 8/16-bit composite timer to "H", and then start the 8/16-bit composite timer. The internal signal becomes "L" at the fifth falling edge. Set the 8/16-bit composite timer to the input capture mode. In addition, enable the 8/16-bit composite timer interrupt and make the 8/16-bit composite timer detect both edges. The time at which the input signal input to the 8/16-bit composite timer is eight times the baud rate.

Find the baud rate setting with the following equations.

- When the counter of the 8/16-bit composite timer does not overflow
  : BGR value = (b - a) / 8 - 1
- When the counter of the 8/16-bit composite timer has overflowed
  : BGR value = (max + b - a) / 8 - 1
  max: Maximum value of free-run timer
  a: TII0 data register value after the first interrupt
  b: TII0 data register value after the second interrupt

Note:

If the BGR value newly calculated based on the synch field in LIN slave mode as explained above has an error of ±15% or more, do not set the baud rate.

For the operations of the input capture function of the 8/16-bit composite timer, see Chapter 12.12.Operation of Input Capture Function.

- LIN synch break detection interrupt and flag

The LIN break detection (LBD) flag in ESCR is set to "1" when the LIN synch break is detected in slave mode. When the LIN break interrupt is enabled (LBIE = 1), an interrupt is generated.

Figure 15-15. Timing of LIN Synch Break Detection and Flag Set

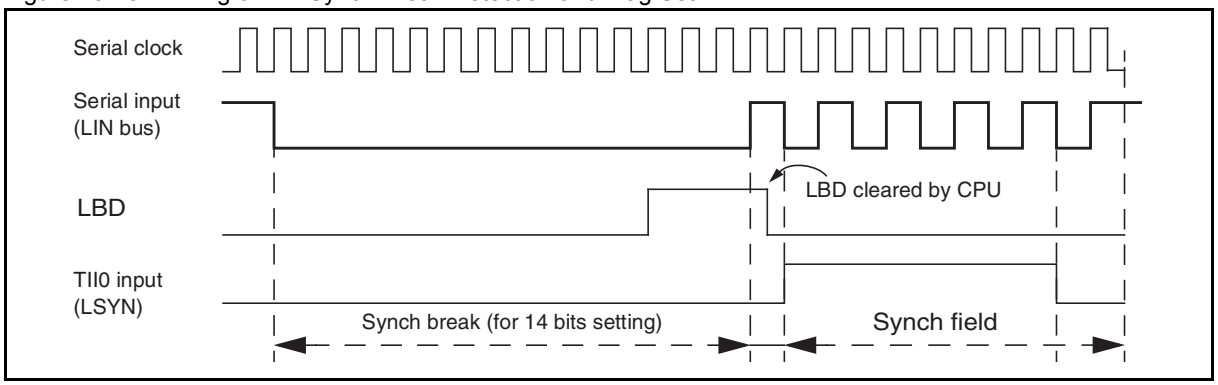

The above diagram shows the timing of the LIN synch break detection and flag.

Since the data framing error (FRE) flag bit in SSR generates a receive interrupt two bits earlier than a LIN break interrupt (if the following communication format is used: 8-bit data, no parity, one stop bit.), set the RXE to "0" when using the LIN break.

The LIN synch break detection functions only in operating mode 3.

Figure 15-16 shows the LIN-UART operation in LIN slave mode.

Figure 15-16. LIN-UART Operation in LIN Slave Mode

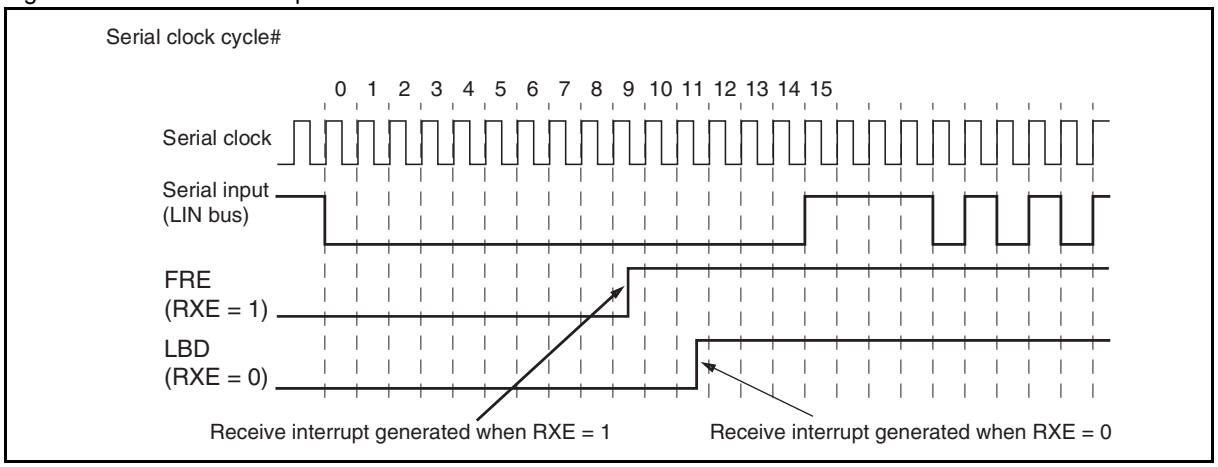

- LIN bus timing

Figure 15-17. LIN Bus Timing and LIN-UART Signals

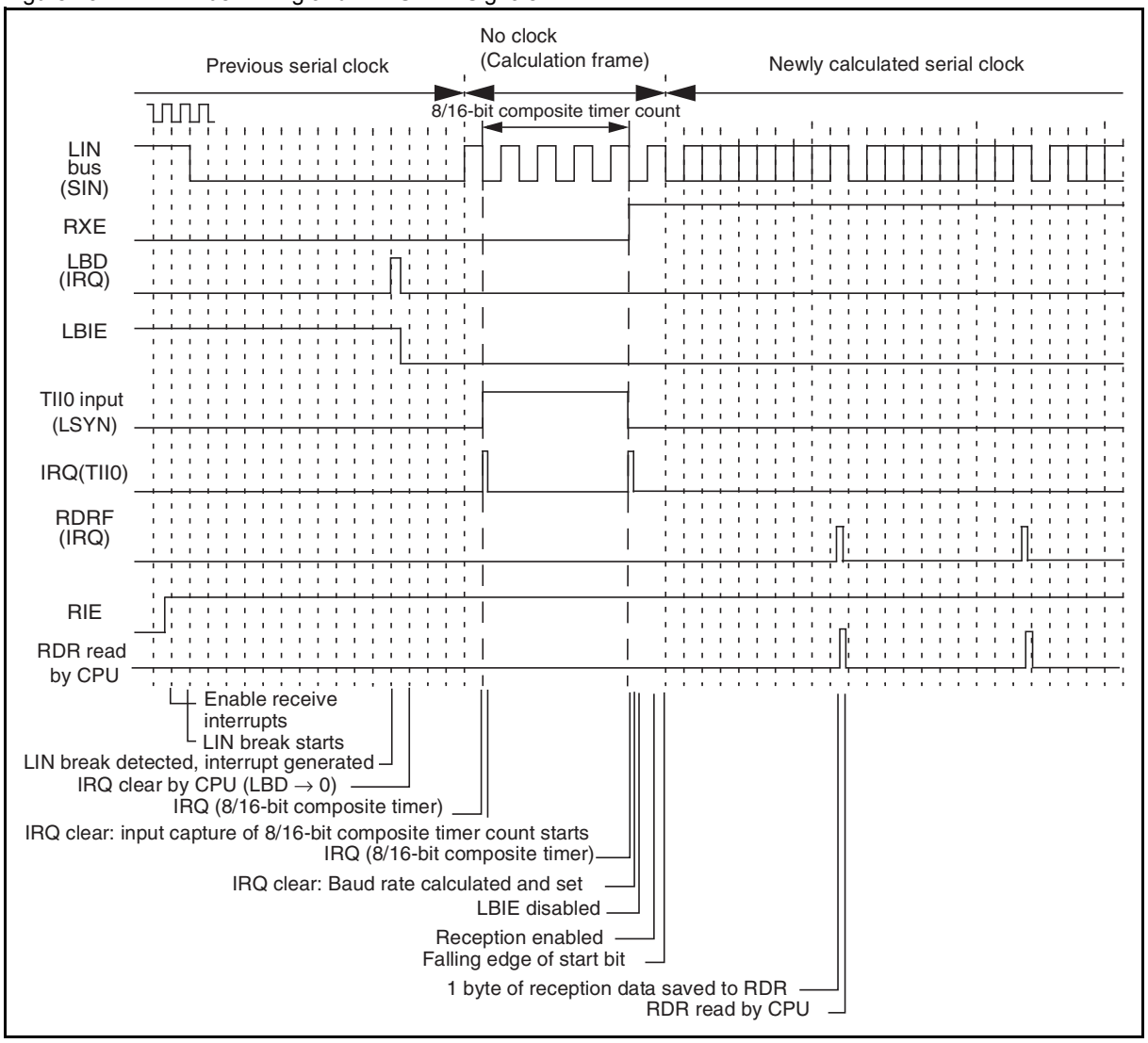

15.6.5 Serial Pin Direct Access

The transmit pin (SOT) and the receive pin (SIN) can be accessed directly.

15.6.5.1 LIN-UART Pin Direct Access

The LIN-UART allows the programmer to directly access the serial I/O pins.

The status of the serial input pin (SIN) can be read by using the serial I/O pin direct access bit (ESCR:SIOP).

To freely set the value of the serial output pin (SOT), enable the direct write access to the serial output pin (SOT) (ESCR:SOPE = 1), write "0" or "1" to the serial I/O pin direct access bit (ESCR:SIOP), and then enable serial output (SMR:SOE = 1).

In LIN mode, this feature is used for reading transmitted data and for error handling when there is a physical LIN bus line signal error.

Note:

Direct access is allowed only when transmission is not in progress (the transmit shift register is empty).

Before enabling transmission (SMR:SOE = 1), write a value to the serial output pin direct access bit (ESCR:SIOP). This prevents a signal of an unexpected level from being output since the SIOP bit holds a previous value.

While the value of the SIN pin is read by normal read, the value of the SOT pin is read from the SIOP bit by the read-modify-write (RMW) type of instruction.

15.6.6 Bidirectional Communication Function (Normal Mode)

Normal serial bidirectional communication can be performed in operating mode 0 or 2. Asynchronous mode can be selected in operating mode 0 and synchronous mode in operating mode 2.

15.6.6.1 Bidirectional Communication Function

To operate the LIN-UART in normal mode (operating mode 0 or 2), the settings shown in Figure 15-18. are required.

Figure 15-18. Settings of LIN-UART Operating Mode 0 and Operating Mode 2

	bit15	bit14	bit13	bit12	bit11	bit10	bit9	bit8	bit7	bit6	bit5	bit4	bit3	bit2	bit1	bit0
SCR, SMR	PEN	P	SBL	CL	AD	CRE	RXE	TXE	MD1	MD0	OTO	EXT	REST	UPCL	SCKE	SOE
Mode 0 →	◎	◎	◎	◎	×	0	◎	◎	0	0	0	◎	0	0	◎	◎
Mode 2 →	▣	▣	▣	+	×	0	◎	◎	1	0	◎	◎	0	0	◎	◎
SSR, RDR/TDR	PE	ORE	FRE	RDRF	TDRE	BDS	RIE	TIE	Set conversion data (during writing) Retain reception data (during reading)							
Mode 0 →	◎	◎	◎	◎	◎	◎	◎	◎								
Mode 2 →	▣	◎	▣	◎	◎	◎	◎	◎								
ESCR, ECCR	LBIE	LBD	LBL1	LBL0	SOPE	SIOP	CCO	SCES	Reserved	LBR	MS	SCDE	SSM	Reserved	RBI	TBI
Mode 0 →	×	×	×	×	◎	◎	0	0	0	0	×	×	×	0	◎	◎
Mode 2 →	×	×	×	×	◎	◎	▣	◎	0	×	◎	◎	◎	0	▣	▣

◎ : Bit to be used
× : Unused bit
1 : Set to "1"
0 : Set to "0"
▣ : Used when SSM = 1 (Synchronous star/stop bit mode)
+ : Bit correctly set automatically

- Inter-CPU connection

When using bidirectional communication, connect two CPUs as shown in Figure 15-19.

Figure 15-19. Example of Connection for Bidirectional Communication in LIN-UART Operating Mode 2

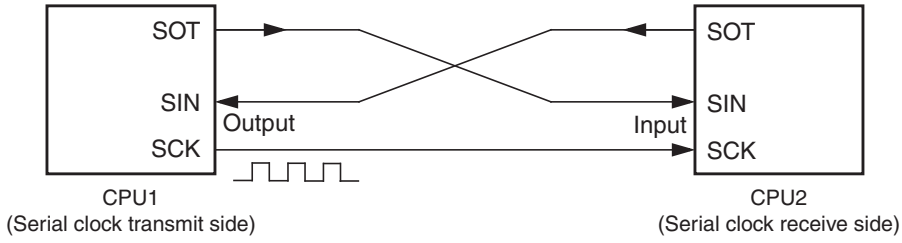

■ Communication procedure example

The communication starts from the transmit side at any time after transmit data is ready. The receive side returns ANS (per one byte in this example) regularly after receiving transmit data. Figure 15-20 is an example of bidirectional communication flow chart.

Figure 15-20. Example of Bidirectional Communication Flow Charti

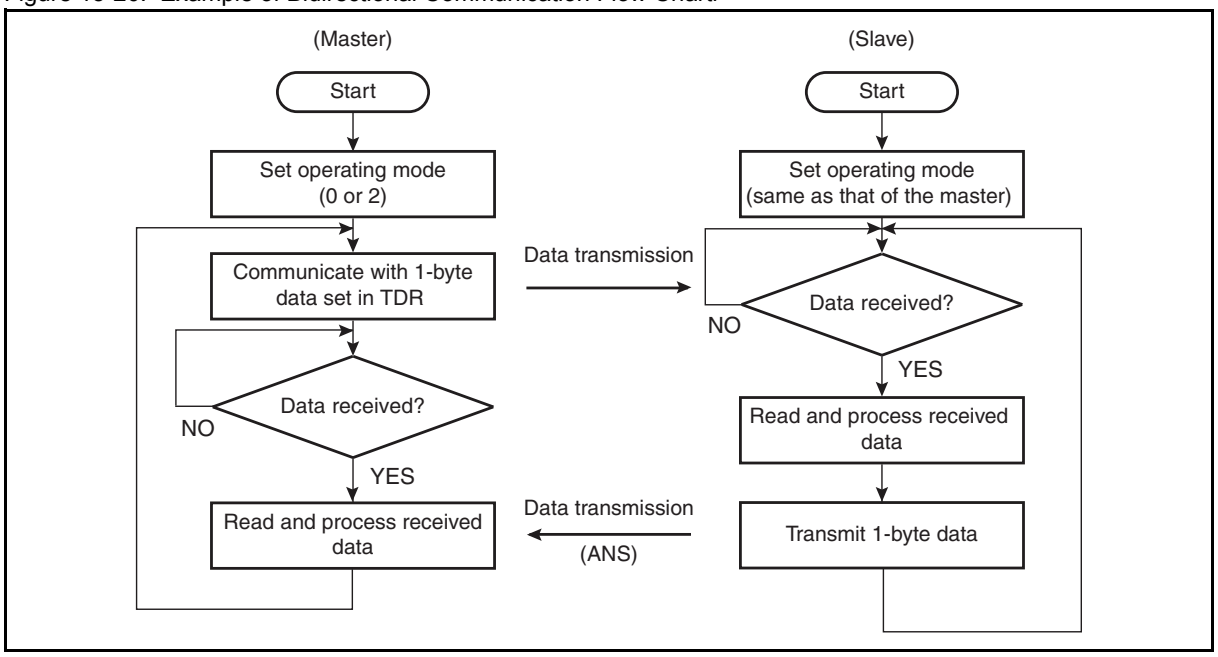

15.6.7 Master/Slave Mode Communication Function (Multiprocessor Mode)

Operating mode 1 allows communication among multiple CPUs connected in master/slave mode. The LIN-UART can be used as a master or a slave.

15.6.7.1 Master/Slave Mode Communication Function

To operate the LIN-UART in multiprocessor mode (operating mode 1), the settings shown in Figure 15-21 are required.

Figure 15-21. Settings of LIN-UART Operating Mode 1

	bit15	bit14	bit13	bit12	bit11	bit10	bit9	bit8	bit7	bit6	bit5	bit4	bit3	bit2	bit1	bit0
SCR, SMR	PEN	P	SBL	CL	AD	CRE	RXE	TXE	MD1	MD0	OTO	EXT	REST	UPCL	SCKE	SOE
Mode 1 →	+	×	◎	◎	◎	0	◎	◎	0	1	0	◎	0	0	◎	◎
SSR, RDR/TDR	PE	ORE	FRE	RDRF	TDRE	BDS	RIE	TIE	Set compare data (during writing) Retain receive data (during reading)							
Mode 1 →	×	◎	◎	◎	◎	◎	◎	◎								
ESCR, ECCR	LBIE	LBD	LBL1	LBL0	SOPE	SIOP	CCO	SCES	Reserved	LBR	MS	SCDE	SSM	Reserved	RBI	TBI
Mode 1 →	×	×	×	×	◎	◎	0	0	0	×	×	×	×	0	◎	◎

◎ : Bit to be used
× : Unused bit
1 : Set to "1"
0 : Set to "0"
+ : Bit correctly set automatically

- Inter-CPU connection

For master/slave mode communication, a communication system consists of two common communication lines connecting between one master CPU and multiple slave CPUs as shown in Figure 15-22. The LIN-UART can be used as a master or a slave.

Figure 15-22. Connection Example of LIN-UART Master/Slave Mode Communication

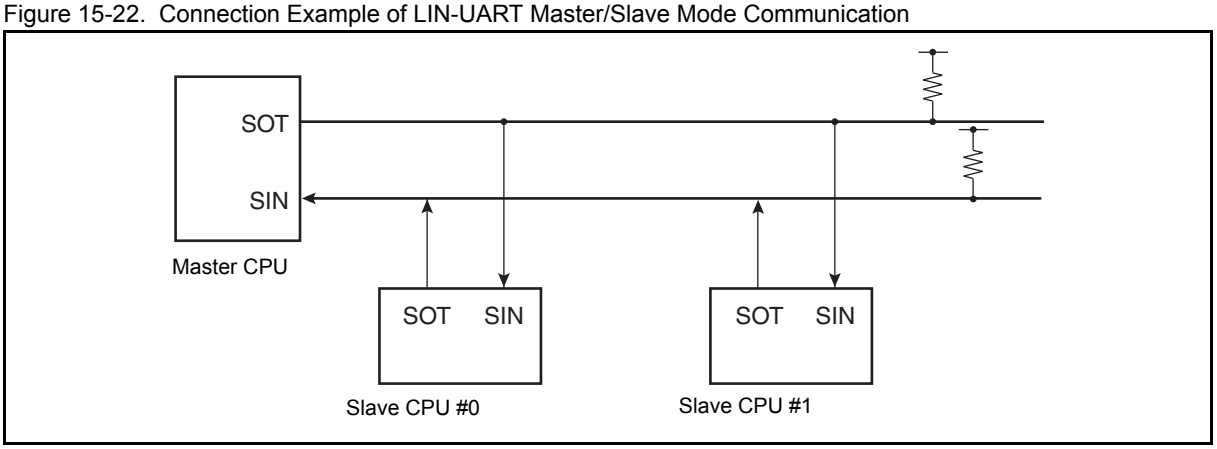

- Function selection

In master/slave mode communication, select the operating mode and the data transfer method as shown in Figure 15-22.

Table 15-12. Selection of Master/Slave Mode Communication Functions

	Operating mode		Data	Parity	Synchronous method	Stop bit	Bit direction
	Master CPU	Slave CPU					
Address transmission/ reception	Operating mode 1 (Transmit/ receive AD bit)	Operating mode 1 (Transmit/ receive AD bit)	AD = 1 + 7-bit or 8-bit address	None	Asynchronous	1 bit or 2 bits	LSB first or MSB first
Data transmission/ reception			AD = 0 + 7-bit or 8-bit data				

■ Communication procedure

Master/slave mode communication starts as the master CPU transmits address data. The address data, which is the data chosen when the AD bit is set to "1", determines the slave CPU that is to be the destination of the communication. A slave CPU uses a program to check address data, and communicates with the master CPU when the address data matches the address assigned to that slave CPU.

Figure 15-23 is a flow chart showing master/slave mode communication (multiprocessor mode).

Figure 15-23. Master/Slave Mode Communication Flow Chart

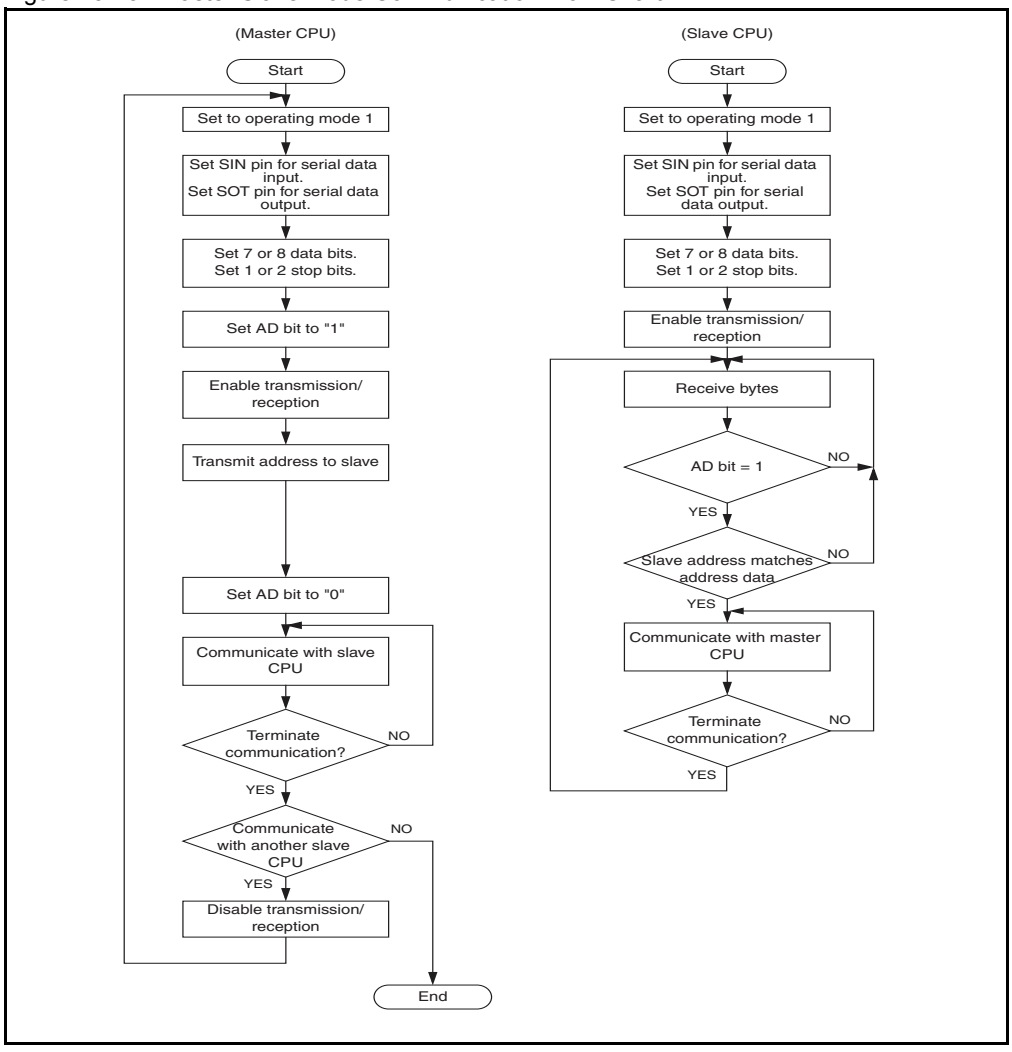

15.6.8 LIN Communication Function

In LIN-UART communication, a LIN device can be used in a LIN master system or a LIN slave system.

15.6.8.1 LIN Master/Slave Mode Communication Function

Figure 15-24 shows the required settings for the LIN communication mode (operating mode 3) of the LIN-UART.

Figure 15-24. Settings of LIN-UART Operating Mode 3 (LIN)

	bit15	bit14	bit13	bit12	bit11	bit10	bit9	bit8	bit7	bit6	bit5	bit4	bit3	bit2	bit1	bit0
SCR, SMR	PEN	P	SBL	CL	AD	CRE	RXE	TXE	MD1	MD0	OTO	EXT	REST	UPCL	SCKE	SOE
Mode 3 →	+	×	+	+	×	0	◎	◎	1	1	0	◎	0	0	◎	◎
SSR, RDR/TDR	PE	ORE	FRE	RDRF	TDRE	BDS	RIE	TIE	Set conversion data (during writing) Retain reception data (during reading)							
Mode 3 →	×	◎	◎	◎	◎	+	◎	◎								
ESCR, ECCR	LBIE	LBD	LBL1	LBL0	SOPE	SIOP	CCO	SCES	Reserved	LBR	MS	SCDE	SSM	Reserved	RBI	TBI
Mode 3 →	◎	◎	◎	◎	◎	◎	0	0	0	◎	×	×	×	0	◎	◎

◎ : Bit to be used
× : Unused bit
1 : Set to "1"
0 : Set to "0"
+ : Bit correctly set automatically

- LIN device connection

Figure 15-25 shows an example of communication in a LIN bus system.

The LIN-UART can operate as a LIN master or a LIN slave.

Figure 15-25. Example of LIN Bus System Communication

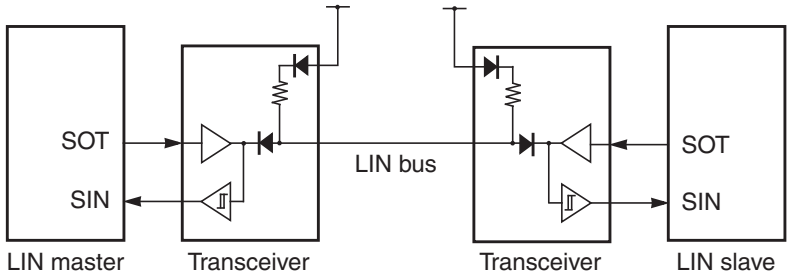

15.6.9 Examples of LIN-UART LIN Communication Flow Chart (Operating Mode 3)

This section shows examples of LIN-UART LIN communication flow charts.

15.6.9.1 LIN Master Device

Figure 15-26. LIN Master Flow Chart

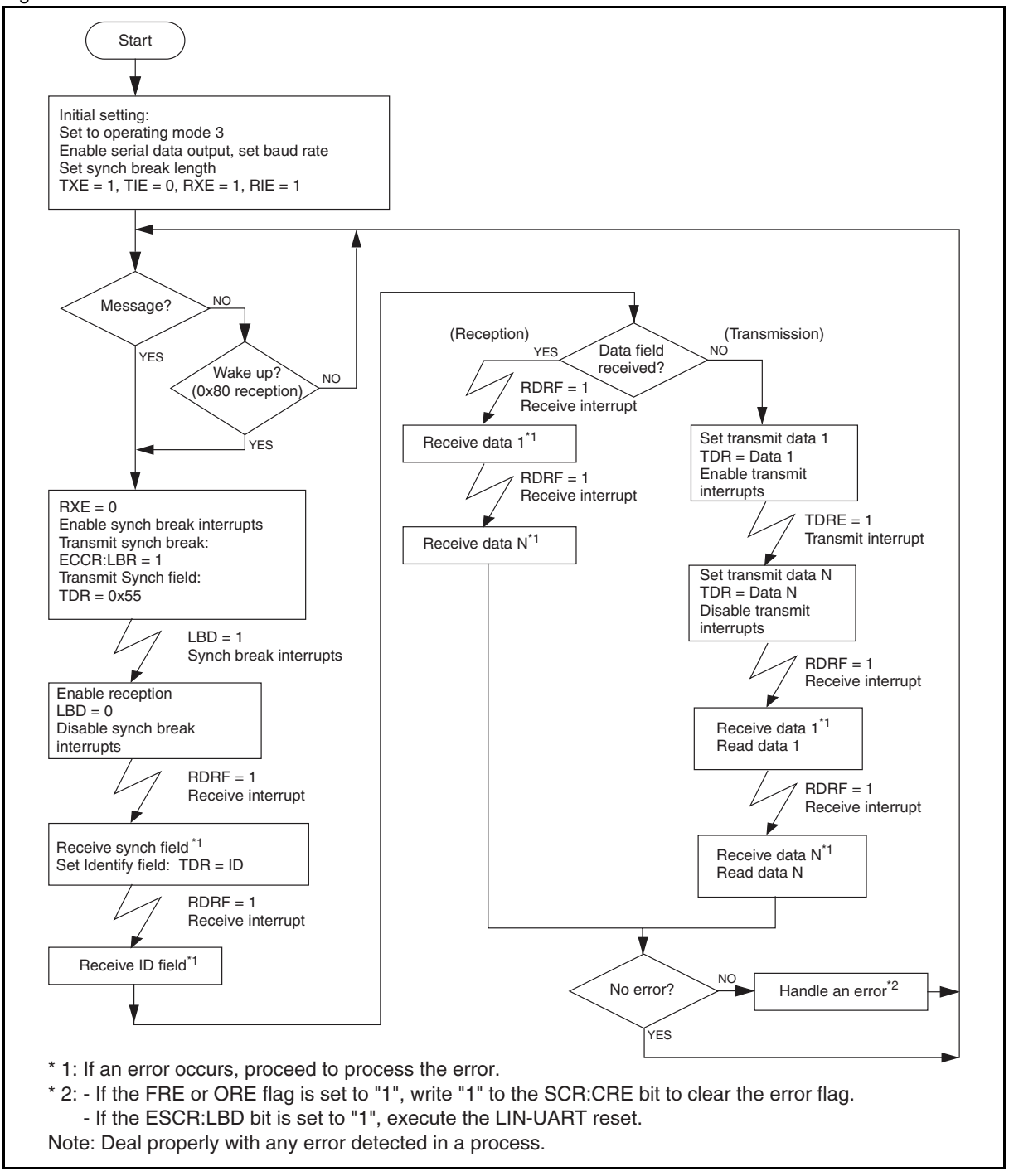

* 1: If an error occurs, proceed to process the error.
* 2: - If the FRE or ORE flag is set to "1", write "1" to the SCR:CRE bit to clear the error flag.
  - If the ESCR:LBD bit is set to "1", execute the LIN-UART reset.

Note: Deal properly with any error detected in a process.

15.6.9.2 LIN Slave Device

Figure 15-27. LIN Slave Flow Chart

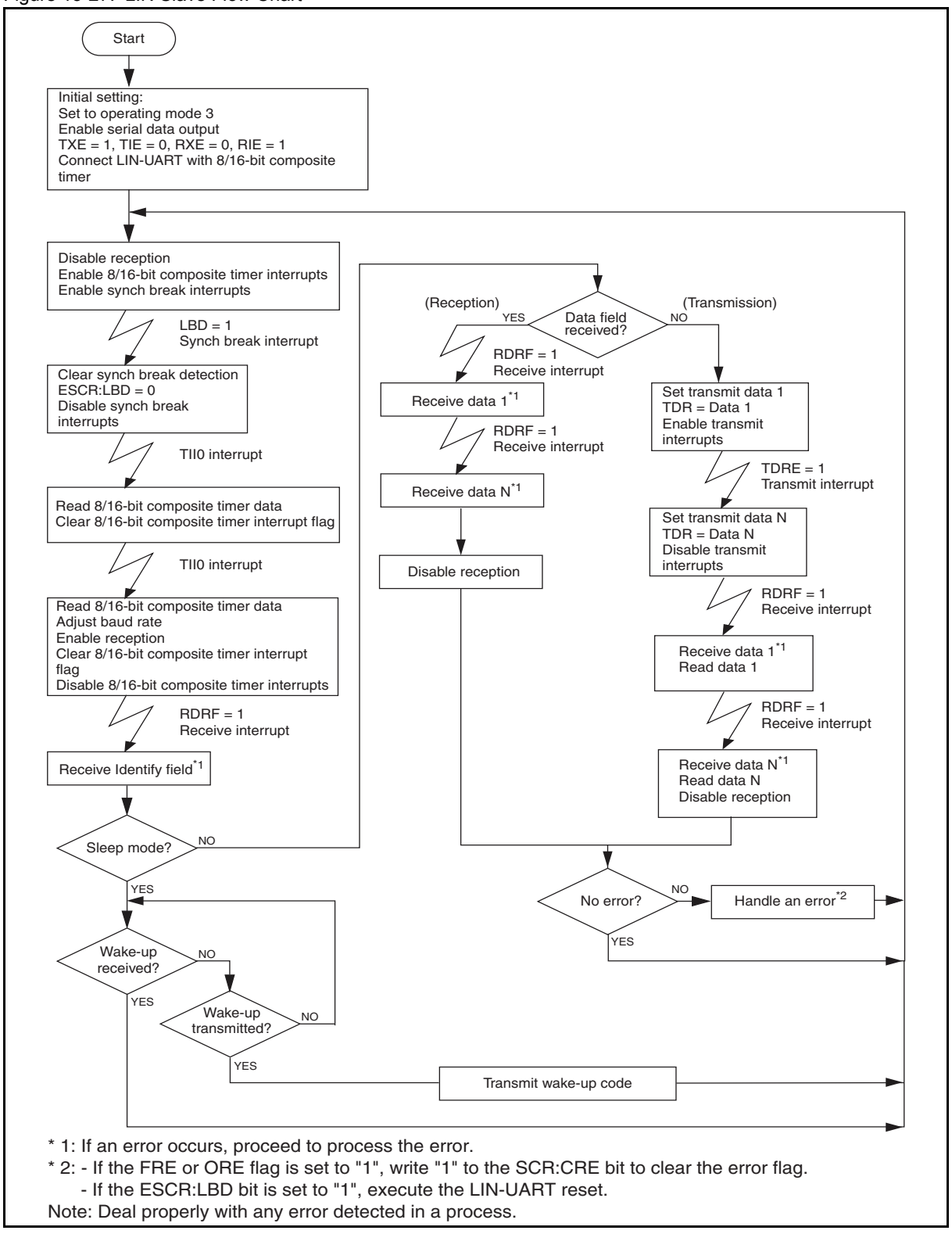

* 1: If an error occurs, proceed to process the error.
* 2: - If the FRE or ORE flag is set to "1", write "1" to the SCR:CRE bit to clear the error flag.
- If the ESCR:LBD bit is set to "1", execute the LIN-UART reset.

Note: Deal properly with any error detected in a process.

15.7 Registers

This section describes the registers of the LIN-UART.

Table 15-13. List of LIN-UART Registers

Register abbreviation	Register name	Reference
SCR	LIN-UART serial control register	15.7.1
SMR	LIN-UART serial mode register	15.7.2
SSR	LIN-UART serial status register	15.7.3
RDR	LIN-UART receive data register	15.7.4
TDR	LIN-UART transmit data register	15.7.4
ESCR	LIN-UART extended status control register	15.7.5
ECCR	LIN-UART extended communication control register	15.7.6
BGR1	LIN-UART baud rate generator register 1	15.7.7
BGR0	LIN-UART baud rate generator register 0	15.7.7

15.7.1 LIN-UART Serial Control Register (SCR)

The LIN-UART serial control register (SCR) is used to set parity, select the stop bit length and data length, select the frame data format in operating mode 1, clear the receive error flag, and enable/disable transmission/reception.

Register Configuration

bit	7	6	5	4	3	2	1	0
Field	PEN	P	SBL	CL	AD	CRE	RXE	TXE
Attribute	R/W	R/W	R/W	R/W	R/W	R/W	R/W	R/W
Initial value	0	0	0	0	0	0	0	0

Register Functions

[bit7] PEN: Parity enable bit

This bit specifies whether or not to add (at transmission) and detect (at reception) a parity bit.

bit7	Details
Writing "0"	Disables parity.
Writing "1"	Enables parity.

Note:

The parity bit is added only in operating mode 0, or in operating mode 2 in which the start/stop bits are to be added to the synchronous data format (ECCR:SSM = 1). This bit is fixed at "0" in operating mode 3 (LIN).

[bit6] P: Parity select bit

With the parity bit having been enabled (SCR:PEN = 1), setting this bit to "1" selects the odd parity and setting this bit to "0" selects the even parity.

bit6	Details
Writing "0"	Even parity
Writing "1"	Odd parity

[bit5] SBL: Stop bit length select bit

This bit sets the bit length of the stop bit (frame end mark in transmit data) in operating mode 0, 1 (asynchronous) or in operating mode 2 (synchronous) in which the start/stop bits are to be added to the synchronous data format (ECCR:SSM = 1).
This bit is fixed at "0" in operating mode 3 (LIN).

bit5	Details
Writing "0"	1 bit
Writing "1"	2 bits

Note:

At reception, only a framing error for the bit length of the stop bit is always detected.

[bit4] CL: Data length select bit

This bit specifies the data length to be transmitted and received. This bit is fixed at "1" in operating mode 2 and operating mode 3.

bit4	Details
Writing "0"	7 bits
Writing "1"	8 bits

[bit3] AD: Address/data format select bit

This bit specifies the data format for the frame to be transmitted and received in multiprocessor mode (operating mode 1). Write a value to this bit in master mode; read this bit in slave mode. The operation in master mode is as follows.
The value for the last received data format is read.

bit3	Details
Writing "0"	Sets the data frame as the data format.
Writing "1"	Sets the address data frame as the data format.

Note:

See 15.8 Notes on Using LIN-UART for the usage of this bit.

[bit2] CRE: Receive error flag clear bit

This bit clears the FRE, ORE, and PE flags in serial status register (SSR).

bit2	Details
Read access	The read value is always "0".
Writing "0"	Has no effect on operation.
Writing "1"	Clears the receive error flags (SSR:FRE, ORE, PE).

[bit1] RXE: Receive operation enable bit

This bits enables or disables the receive operation of the LIN-UART.
The LIN synch break detection in operating mode 3 is not affected by the setting of this bit.

bit1	Details
Writing "0"	Disables data frame reception.
Writing "1"	Enables data frame reception.

Note:

When data frame reception is disabled (RXE = 0) while it is in progress, the reception halts immediately. In this case, the integrity of data is not guaranteed.

[bit0] TXE: Transmit operation enable bit

This bits enables or disables the transmit operation of the LIN-UART.

bit0	Details
Writing "0"	Disables data frame transmission.
Writing "1"	Enables data frame transmission.

Note:

When data frame transmission is disabled (TXE = 0) while it is in progress, the transmission halts immediately. In this case, the integrity of data is not guaranteed.

15.7.2 LIN-UART Serial Mode Register (SMR)

The LIN-UART serial mode register (SMR) is used to select the operating mode, specify the baud rate clock, and enable/ disable output to the serial data and clock pins.

Register Configuration

bit	7	6	5	4	3	2	1	0
Field	MD1	MD0	OTO	EXT	REST	UPCL	SCKE	SOE
Attribute	R/W	R/W	R/W	R/W	R/W	R/W	R/W	R/W
Initial value	0	0	0	0	0	0	0	0

Register Functions

[bit7:6] MD[1:0]: Operating mode select bits

These bits select the operating mode.

bit7:6	Operating mode	Details
Writing "00"	0	Asynchronous (Normal mode)
Writing "01"	1	Asynchronous (Multiprocessor mode)
Writing "10"	2	Synchronous (Normal mode)
Writing "11"	3	Asynchronous (LIN mode)

Note:

When the mode is changed during communication, exchanging on the LIN-UART is suspended and the LIN-UART waits for the start of the next communication.

[bit5] OTO: One-to-one external clock input enable bit

This bit enables using the external clock directly as the LIN-UART serial clock.
In operating mode 2 (asynchronous), the external clock is used when the reception side of the serial clock is selected (ECCR:MS = 1).
When the EXT bit in the SMR register is "0", the OTO bit is fixed at "0".

bit5	Details
Writing "0"	The baud rate generator (reload counter) is used as the LIN-UART serial clock.
Writing "1"	The external clock is used directly as the LIN-UART serial clock.

[bit4] EXT: External serial clock source select bit

This bit selects the clock input.

bit4	Details
Writing "0"	Selects the clock of the baud rate generator (reload counter).
Writing "1"	Selects the external serial clock source.

[bit3] REST: Reload counter restart bit

This bit restarts the reload counter.

bit3	Details
Read access	The read value is always "0".
Writing "0"	Has no effect on operation.
Writing "1"	Restarts the reload counter.

[bit2] UPCL: LIN-UART programmable clear bit (LIN-UART software reset)

This bit resets the LIN-UART.
Writing "0" to this bit has no effect on operation.
Writing "1" to this bit resets the LIN-UART immediately (LIN-UART software reset). However, the register settings are maintained. Upon the reset, transmission and reception are suspended, and all of the transmit/receive interrupt sources (TDRE, RDRF, LBD, PE, ORE, FRE) are cleared.
Reset the LIN-UART after disabling the interrupt and transmission.
In addition, after the LIN-UART is reset, the receive data register is cleared (RDR = 0x00), and the reload counter is restarted.

bit2	Details
Read access	The read value is always "0".
Writing "0"	Has no effect on operation.
Writing "1"	Resets the LIN-UART.

[bit1] SCKE: LIN-UART serial clock output enable bit

This bit controls the I/O port of the LIN-UART serial clock.
Writing "0" to this bit makes the SCK pin function as a general-purpose I/O port or a LIN-UART serial clock input pin.
Writing "1" to this bit makes the SCK pin function as a LIN-UART serial clock output pin and output the clock in operating mode 2 (synchronous).
When set as a serial clock output pin (SCKE = 1), the SCK pin functions as a LIN-UART serial clock output pin regardless of the state of the general-purpose I/O port sharing the same pin with SCK.

bit1	Details
Writing "0"	Makes the SCK pin function as a general-purpose I/O port or a LIN-UART serial clock input pin.
Writing "1"	Makes the SCK pin function as a LIN-UART serial clock output pin.

Note:

To use the SCK pin as a LIN-UART serial clock input pin (SCKE = 0), enable the use of the input port by setting the bit in the DDR register corresponding to the general-purpose I/O port sharing the same pin with SCK. In addition, select the external clock (EXT = 1) using the external serial clock source select bit.

[bit0] SOE: LIN-UART serial data output enable bit

This bit enables or disables outputting LIN-UART serial data.
When set as a serial data output pin (SOE = 1), the SOT pin functions as a serial data output pin (SOT) regardless of the state of the general-purpose I/O port sharing the same pin with SOT.

bit0	Details
Writing "0"	Makes the SOT pin function as a general-purpose I/O port.
Writing "1"	Makes the SOT pin function as the LIN-UART serial data output pin.

15.7.3 LIN-UART Serial Status Register (SSR)

The LIN-UART serial status register (SSR) is used to check the status of transmission, reception and error, and to enable and disable interrupts.

Register Configuration

bit	7	6	5	4	3	2	1	0
Field	PE	ORE	FRE	RDRF	TDRE	BDS	RIE	TIE
Attribute	R	R	R	R	R	R/W	R/W	R/W
Initial value	0	0	0	0	1	0	0	0

Register Functions

[bit7] PE: Parity error flag bit

This flag bit detects the parity error in received data.
This bit is set to "1" when a parity error occurs during reception, and cleared by writing "1" to the CRE bit in the LIN-UART serial control register (SCR).
When both the PE bit and the RIE bit are "1", a receive interrupt request is output.
When this flag is set, the data in the receive data register (RDR) is invalid.

bit7	Details
Reading "0"	Indicates that no parity error has been detected.
Reading "1"	Indicates that a parity error has been detected.

[bit6] ORE: Overrun error flag bit

This flag bit detects the overrun error in received data.
This bit is set to "1" when an overrun occurs during reception, and cleared by writing "1" to the CRE bit in the LIN-UART serial control register (SCR).
When both the ORE bit and the RIE bit are "1", a receive interrupt request is output.
When this flag is set, the data in the receive data register (RDR) is invalid.

bit6	Details
Reading "0"	Indicates that no overrun error has been detected.
Reading "1"	Indicates that an overrun error has been detected.

[bit5] FRE: Framing error flag bit

This flag bit detects the framing error in received data.
This bit is set to "1" when a framing error occurs during reception, and cleared by writing "1" to the CRE bit in the LIN-UART serial control register (SCR).
When both the FRE bit and the RIE bit are "1", a receive interrupt request is output.
When this flag is set, the data in the LIN-UART receive data register (RDR) is invalid.

bit5	Details
Reading "0"	Indicates that no framing error has been detected.
Reading "1"	Indicates that a framing error has been detected.

[bit4] RDRF: Receive data register full flag bit

This flag bit shows the status of the LIN-UART receive data register (RDR).
This bit is set to "1" when received data is loaded into RDR, and cleared to "0" by reading the receive data register (RDR).
When both the RDRF bit and the RIE bit are "1", a receive interrupt request is output.

bit4	Details
Reading "0"	Indicates that there is no data in the receive data register (RDR).
Reading "1"	Indicates that there is data in the receive data register (RDR).

[bit3] TDRE: Transmit data register empty flag bit

This flag bit shows the status of the LIN-UART transmit data register (TDR).
This bit is set to "0" by writing the transmit data to TDR, and indicates that the TDR has valid data. When data is loaded into the transmit shift register and data transfer starts, this bit is set to "1", indicating that the TDR does not have valid data.
When both the TDRE bit and the TIE bit are "1", a transmit interrupt request is output.
When the TDRE bit is "1", setting the LBR bit in the LIN-UART extended communication control register (ECCR) to "1" changes the TDRE bit to "0". After the LIN synch break is generated, the TDRE bit returns to "1".

bit3	Details
Reading "0"	Indicates that there is data in the transmit data register (TDR).
Reading "1"	Indicates that there is no data in the transmit data register (TDR).

Note:

The initial value of the TDRE bit is "1".

[bit2] BDS: Transfer direction select bit

This bit specifies whether serial data transfer starts from the least significant bit (LSB-first, BDS = 0) or from the most significant bit (MSB-first, BDS = 1).

bit2	Details
Writing "0"	Selects LSB-first. (Serial data transfer starts from the LSB.)
Writing "1"	Selects MSB-first. (Serial data transfer starts from the MSB.)

Note:

When data is written to or read from the serial data register, the data on the upper side and that on the lower side are swapped. Therefore, if the BDS bit is modified after data is written to the RDR register, the data in the RDR register becomes invalid. In operating mode 3 (LIN), the BDS bit is fixed at "0".

[bit1] RIE: Receive interrupt request enable bit

This bit enables or disables the receive interrupt request output to the interrupt controller.
When both the RIE bit and the receive data flag bit (RDRF) are "1", or when one or more error flag bits (PE, ORE, FRE) is "1", a receive interrupt request is output.

bit1	Details
Writing "0"	Disables the receive interrupt.
Writing "1"	Enables the receive interrupt.

[bit0] TIE: Transmit interrupt request enable bit

This bit enables or disables the transmit interrupt request output to the interrupt controller.
When both the TIE bit and the TDRE bit are "1", a transmit interrupt request is output.

bit0	Details
Writing "0"	Disables the transmit interrupt.
Writing "1"	Enables the transmit interrupt.

15.7.4 LIN-UART Receive Data Register/LIN-UART Transmit Data Register (RDR/TDR)

The LIN-UART receive data register and the LIN-UART transmit data register are located at the same address. If read, they function as the receive data register; if written, they function as the transmit data register.

Register Configuration

bit	7	6	5	4	3	2	1	0
Field	D7	D6	D5	D4	D3	D2	D1	D0
Attribute	R/W	R/W	R/W	R/W	R/W	R/W	R/W	R/W
Initial value	0	0	0	0	0	0	0	0

Register Functions

	Details
Read access:	Reads data from the LIN-UART receive data register.
Write access:	Writes data to the LIN-UART transmit data register.

15.7.4.1 LIN-UART Receive Data Register (RDR)

The LIN-UART receive data register (RDR) is the data buffer register for serial data reception.
Serial input data signals transmitted to the serial input pin (SIN) are converted by the shift register, and the converted data is stored in the LIN-UART receive data register (RDR).
If the data length is 7 bits, the MSB (RDR:D7) is "0".
The receive data register full flag bit (SSR:RDRF) is set to "1" when received data is stored in the LIN-UART receive data register (RDR). If the receive interrupt has been enabled (SSR:RIE = 1), a receive interrupt request is made.
Read the LIN-UART receive data register (RDR) with the receive data register full flag bit (SSR:RDRF) being "1". The receive data register full flag bit (SSR:RDRF) is automatically cleared to "0" if the LIN-UART receive data register (RDR) is read. In addition, the receive interrupt is cleared when the receive interrupt has been enabled and no errors occur.
When a reception error occurs (any of SSR:PE, ORE, or FRE is "1"), the data in the LIN-UART receive data register (RDR) becomes invalid.

15.7.4.2 LIN-UART Transmit Data Register (TDR)

The LIN-UART transmit data register (TDR) is the data buffer register for serial data transmission.
If the data to be transmitted is written to the LIN-UART transmit data register (TDR) when transmission has been enabled (SCR:TXE = 1), the transmit data is transferred to the transmit shift register to convert to serial data, and the serial data is output from the serial data output pin (SOT).
If the data length is 7 bits, the data in the MSB (TDR:D7) is invalid.
The transmit data register empty flag bit (SSR:TDRE) is cleared to "0" when transmit data is written to the LIN-UART transmit data register (TDR).
The transmit data register empty flag bit (SSR:TDRE) is set to "1" after the data is transferred to the transmit shift register and data transmission starts.
If the transmit data register empty flag bit (SSR:TDRE) is "1", the next transmit data can be written to TDR. If the transmit interrupt has been enabled, a transmit interrupt is generated. Write the next transmit data to TDR after a transmit interrupt or when the transmit data register empty flag bit (SSR:TDRE) is "1".

Note:

The LIN-UART transmit data register is a write-only register; the receive data register is a read-only register. Since both registers are located at the same address, the write value and the read value are different. Thus, the read-modify-write (RMW) type of instruction, such as the INC instruction and the DEC instruction, cannot be used.

15.7.5 LIN-UART Extended Status Control Register (ESCR)

The LIN-UART extended status control register (ESCR) has the settings for enabling/disabling LIN synch break interrupt, LIN synch break length selection, LIN synch break detection, direct access to the SIN and SOT pins, continuous clock output in LIN-UART synchronous clock mode and sampling clock edge.

Register Configuration

bit	7	6	5	4	3	2	1	0
Field	LBIE	LBD	LBL1	LBL0	SOPE	SIOP	CCO	SCES
Attribute	R/W	R/W	R/W	R/W	R/W	R/W	R/W	R/W
Initial value	0	0	0	0	0	1	0	0

Register Functions

[bit7] LBIE: LIN synch break detection interrupt enable bit

This bit enables or disables LIN synch break detection interrupts.
An interrupt is generated when the LIN synch break detection flag (LBD) is "1" and the interrupt is enabled (LBIE = 1).
This bit is fixed at "0" in operating mode 1 and operating mode 2.

bit7	Details
Writing "0"	Disables the LIN synch break detection interrupt.
Writing "1"	Enables the LIN synch break detection interrupt.

[bit6] LBD: LIN synch break detection flag bit

This bit detects the LIN synch break.
This bit is set to "1" when a LIN synch break is detected in operating mode 3 (the serial input is "0" when bit width is 11 bits or more). If "0" is written to the LBD bit, the LBD bit and the interrupt are cleared. Although the bit always returns "1" if read by the read-modify-write (RMW) type of instruction, this does not indicate that a LIN synch break has been detected.

bit6	Details
Reading "0"	Indicates that no LIN synch break has been detected.
Writing "1"	Indicates that a LIN synch break has been detected.
Writing "0"	Clears this bit.
Writing "1"	Has no effect on operation.

Note:

To detect a LIN synch break, enable the LIN synch break detection interrupt (LBIE = 1), and then disable the reception (SCR:RXE = 0).

[bit5:4] LBL[1:0]: LIN synch break length select bits

These bits select the bit length for the LIN synch break generation time.
The LIN synch break length for reception is always 11 bits.

bit5:4	Details
Writing "00"	13 bits
Writing "01"	14 bits
Writing "10"	15 bits
Writing "11"	16 bits

[bit3] SOPE: Serial output pin direct access enable bit*

This bit enables or disables direct writing to the SOT pin.
Setting this bit to "1" when serial data output has been enabled (SMR:SOE = 1) enables direct writing to the SOT pin.

bit3	Details
Writing "0"	Disables serial output pin direct access.
Writing "1"	Enables serial output pin direct access.

[bit2] SIOP: Serial I.O pin direct access bit*

This bit controls direct access to the serial I/O pin.
The SIOP bit always returns the value of the SIN pin if read by a normal read instruction.
If direct access to the serial output pin is enabled (SOPE = 1), the value written to this bit is reflected in the SOT pin.

bit2	Details
Read access	Reads the value of the SIN pin.
With the SOPE bit set to "0":	
Writing "0"	Has no effect on operation.
Writing "1"	
With the SOPE bit set to "1":	
Writing "0"	Fixes the SOT pin at "0".
Writing "1"	Fixes the SOT pin at "1".

Note:

When the bit manipulation instruction is used, the SIOP bit returns the bit value of the SOT pin in the read cycle.

*: Relationship between SOPE and SIOP

SOPE	SIOP	Write access to SIOP	Read access to SIOP
0	R/W	It has no effect on operation. (However, the value written to the SIOP bit is held.)	It returns the value of the SIN pin.
1	R/W	It writes "0" or "1" to the SOT pin.	It returns the value of the SIN pin.
1	RMW	It reads the value of the SOT pin and writes "0" or "1" to the SOT pin.	

[bit1] CCO: Continuous clock output enable bit

This bit enables or disables continuous serial clock output from the SCK pin.
In operating mode 2 (synchronous) in which the serial clock transmission side is selected, setting the CCO bit to "1" enables the continuous serial clock output from the SCK pin when the SCK pin is used as an clock output pin.

bit1	Details
Writing "0"	Disables continuous clock output.
Writing "1"	Enables continuous clock output.

Note:

When the CCO bit is "1", set the SSM bit in the ECCR register to "1".

[bit0] SCES: Sampling clock edge select bit

This bit selects a sampling edge. In operating mode 2 (synchronous) in which the serial clock reception side is selected, setting the SCES bit to "1" switches the sampling edge from the rising edge to the falling edge.
In operating mode 2 (synchronous) in which the serial clock transmission side is selected (ECCR:MS = 0), when the SCK pin is used as an clock output pin, the internal serial clock signal and the output clock signal are inverted.
In operating mode 0/1/3, set this bit to "0".
With this bit set to "1", executing a software reset is prohibited.
Disable reception and transmission before modifying this bit.

bit0	Details (only for operating mode 2)
Writing "0"	Selects the rising edge of the clock as the sampling edge (normal).
Writing "1"	Selects the falling edge of the clock as the sampling edge (inverted clock).

15.7.6 LIN-UART Extended Communication Control Register (ECCR)

The LIN-UART extended communication control register (ECCR) is used for the bus idle detection, the synchronous clock setting, and the LIN synch break generation.

Register Configuration

bit	7	6	5	4	3	2	1	0
Field	Reserved	LBR	MS	SCDE	SSM	Reserved	RBI	TBI
Attribute	W	W	R/W	R/W	R/W	W	R	R
Initial value	0	0	0	0	0	0	X	X

Register Functions

[bit7] Reserved bit

Always set this bit to "0".

[bit6] LBR: LIN synch break generation bit

In operating mode 3, if this bit is set to "1", a LIN synch break whose length is specified in the LBL[1:0] bits in the ESCR register is generated.
In operating mode 0/1/2, set this bit to "0".

bit6	Details (only for operating mode 3)
Read access	The read value is always "0".
Writing "0"	Has no effect on operation.
Writing "1"	Generates a LIN synch break.

[bit5] MS: Transmission side/reception side of serial clock select bit

This bit selects the transmission side/reception side of the serial clock in operating mode 2.
If the transmission side (MS = 0) is selected, the LIN-UART generates a synchronous clock.
If the reception side (MS = 1) is selected, the LIN-UART receives an external serial clock. In mode 0/1/3, this bit is fixed at "0".
Modify this bit only when the SCR:TXE bit is "0".

bit5	Details (only for operating mode 2)
Writing "0"	Selects the transmission side (serial clock generation).
Writing "1"	Selects the reception side (external serial clock reception).

Note:

When the reception side is selected, select the external clock as the clock source and enable the external clock input (SMR:SCKE = 0, EXT = 1, OTO = 1).

[bit4] SCDE: Serial clock delay enable bit

In operating mode 2 in which the serial clock transmission side is selected, if the SCDE bit is set to "1", a delayed serial clock as shown in Figure 15-13. is output. The function of outputting delayed serial clock can be used in the Serial Peripheral Interface (SPI).
This bit is fixed at "0" in operating mode 0/1/3.

bit4	Details (only for operating mode 2)
Writing "0"	Disables serial clock delay.
Writing "1"	Enables serial clock delay.

[bit3] SSM: Start/stop bits mode enable bit

In operating mode 2, if this bit is set to "1", the start/stop bits are added to the synchronous data format.
In operating mode 0/1/3, this bit is fixed at "0".

bit3	Details (only for operating mode 2)
Writing "0"	Disables the start/stop bits.
Writing "1"	Enables the start/stop bits.

[bit2] Reserved bit

Always set this bit to "0".

[bit1] RBI: Receive bus idle detection flag bit

If the SIN pin is at "H" level and no reception is executed, this bit is "1". Do not use this bit when SSM = 0 in operating mode 2.

bit1	Details
Reading "0"	Indicates that reception is in progress.
Reading "1"	Indicates that there is no reception operation.

[bit0] TBI: Transmit bus idle detection flag bit

If there is no transmission on the SOT pin, this bit is "1". Do not use this bit when SSM = 0 in operating mode 2.

bit0	Details
Reading "0"	Indicates that transmission is in progress.
Reading "1"	Indicates that there is no transmission operation.

15.7.7 LIN-UART Baud Rate Generator Registers 1, 0 (BGR1, BGR0)

The LIN-UART baud rate generator registers 1, 0 (BGR1, BGR0) set the division ratio of the serial clock. In addition, the count value in the transmit reload counter is read from this generator.

Register Configuration

BGR1

bit	7	6	5	4	3	2	1	0
Field	—	BGR14	BGR13	BGR12	BGR11	BGR10	BGR9	BGR8
Attribute	—	R/W	R/W	R/W	R/W	R/W	R/W	R/W
Initial value	0	0	0	0	0	0	0	0

BGR0

bit	7	6	5	4	3	2	1	0
Field	BGR7	BGR6	BGR5	BGR4	BGR3	BGR2	BGR1	BGR0
Attribute	R/W	R/W	R/W	R/W	R/W	R/W	R/W	R/W
Initial value	0	0	0	0	0	0	0	0

Functions of BGR1 Register

[bit7] Undefined bit

The read value is always "0". Writing a value to this bit has no effect on operation.

[bit6:0] BGR[14:8]

bit6:0	Details
Read access:	Reads the values of bit8:14 in the transmit reload counter.
Write access:	Writes values to bit8:14 in the reload counter.

15.7.7.1 Functions of BGR0 Register

[bit7:0] BGR[7:0]

bit7:0	Details
Read access:	Reads the values of bit0:7 in the transmit reload counter.
Write access:	Writes values to bit0:7 in the reload counter.

The LIN-UART baud rate generator registers set the division ratio of the serial clock.
BGR1 corresponds to the upper bits and BGR0 to the lower bits. The reload value of the counter can be written to and the transmit reload counter value can be read from BGR1 and BRG0. In addition, BGR1 and BGR0 can be accessed by byte access and word access.
Writing a reload value to the LIN-UART baud rate generator registers causes the reload counter to start counting.
Write values to the BGR1 register or the BGR0 register only when the LIN-UART has stopped operating.

15.8 Notes on Using LIN-UART

This section provides notes on using the LIN-UART.

15.8.1 Notes on Using LIN-UART

- Enabling operation

The LIN-UART has the TXE bit and the RXE bit in the LIN-UART serial control register (SCR) to enable transmission and reception respectively. Since both transmission and reception are disabled by default (initial values), enable both transmission and reception before the transfer starts. Transmission and reception can be disabled to stop transfer if necessary.

- Setting communication mode

The communication mode should be set while the LIN-UART stops operating. If the communication mode is set while transmission or reception is in progress, the integrity of data being transmitted or received at the setting of the mode is not guaranteed.

- Timing of enabling transmit interrupts

Since the default (initial) value of the transmit data register empty flag bit (SSR:TDRE) is "1" (no transmit data, transmit data write enabled), a transmit interrupt request is made immediately after the transmit interrupt request is enabled (SSR:TIE = 1). To prevent any transmit interrupt request from being made, always set the TIE flag bit to "1" after setting transmit data.

- Modifying operation settings

With the sampling clock edge select bit (ESCR:SCES) set to "0", before modifying any of the bits listed below, disable reception and transmission. After modifying them, reset the LIN-UART with a software reset.

1. Serial control register (SCR)

Parity enable bit (PEN), stop bit length select bit (SBL), data length select bit (CL)

2. Serial mode register (SMR)

Operating mode select bits (MD[1:0])

3. Extended status control register (ESCR)

Continuous clock output enable bit (CCO)

4. Extended communication control register (ECCR)

Serial clock transmission/reception side select bit (MS), serial clock delay enable bit (SCDE), start/stop bits mode enable bit (SSM)

To reset the LIN-UART with a software reset (SMR:UPCL = 1), finish modifying the settings of the SMR register first, and then access the register again.

In the case of not following the above procedure to modify operating settings, proper operations of this device cannot be guaranteed.

Though the transmission bit length of the LIN break field is variable, the detection bit length of the LIN break field is fixed at 11 bits.

- Modifying sampling clock edge select bit (ESCR:SCES)

With the SCES bit set to "1", executing the LIN-UART software reset is prohibited.

1. To modify the SCES bit from "0" to "1"

Disable reception and transmission, executing a LIN-UART software reset (SMR:UPCL = 1), then modify the SCES bit from "0" to "1".

2. To modify the SCES bit from "1" to "0"

Disable reception and transmission, modify the SCES bit from "1" to "0", then executing a LIN-UART software reset (SMR:UPCL = 1).

- Using LIN functions

The LIN functions are available in operating mode 3. In the same mode, the communication format is predefined (8-bit data, no parity, one stop bit, LSB first).

While the length of the LIN synch break transmit bit is variable, in detection, the bit length is fixed at 11 bits.

- LIN slave settings

Before the LIN-UART starts operating as a slave, the baud rate must be set before the first LIN synch break is received to ensure that a LIN synch break whose length is a minimum of 13 bits is successfully detected.

- Bus idle function

The bus idle function is not available in synchronous mode (operating mode 2).

- AD bit (LIN-UART serial control register (SCR): Address/data format select bit)

Pay attention to the following issues when using the AD bit.

The AD bit is used to select the address/data for transmission by writing a value to it. When the AD bit is read, it returns the value of the AD bit received last. Inside the microcontroller, the AD bit value received and the one transmitted are saved in separate registers.

The AD bit value transmitted is read when the read-modify-write (RMW) type of instruction is used. Therefore, if another bit in the SCR register is accessed by bit access, an incorrect value may be written to the AD bit.

For the above reason, set the AD bit at the last access to the SCR register before transmission. The above problem can also be prevented by always using byte access to write values to the SCR register.

- LIN-UART software reset

Execute the LIN-UART software reset (SMR:UPCL = 1) when the TXE bit in the LIN-UART serial control register (SCR) is "0".

- Synch break detection

In operating mode 3 (LIN mode), when serial input is 11 bits or more in width and becomes "L", the LBD bit in the extended status control register (ESCR) is set to "1" (synch break detected) and the LIN-UART waits for the synch field. Therefore, when serial input has more than 11 bits of "0" not at the time of a synch break, the LIN-UART recognizes that a synch break has been input (LBD = 1) and then waits for the synch field.

In this case, execute the LIN-UART reset (SMR: UPCL = 1).

- Handling framing errors

If a framing error occurs (stop bit:SIN = 0) and the next start bit (SIN = 0) immediately follows it, this start bit is recognized regardless of a falling edge for the start bit and reception is started. This sequence is used for detecting the continuous "L" state of the serial data input (SIN) when the next framing error is detected while the data stream is synchronized (See "When reception is always enabled (RXE = 1)" in Figure 15-28.).

If this operation is not necessary, disable data reception temporarily after receiving a framing error (RXE = 1→0→1). Therefore, the falling edge of the serial data input (SIN) is detected, the start bit is recognized when "L" is detected at the reception sampling point, and the reception is started (See "When reception is temporarily disabled (RXE = 1→0→1)" in Figure 15-28.).

Figure 15-28. UART Dominant Bus Operation

When reception is always enabled (RXE = 1)

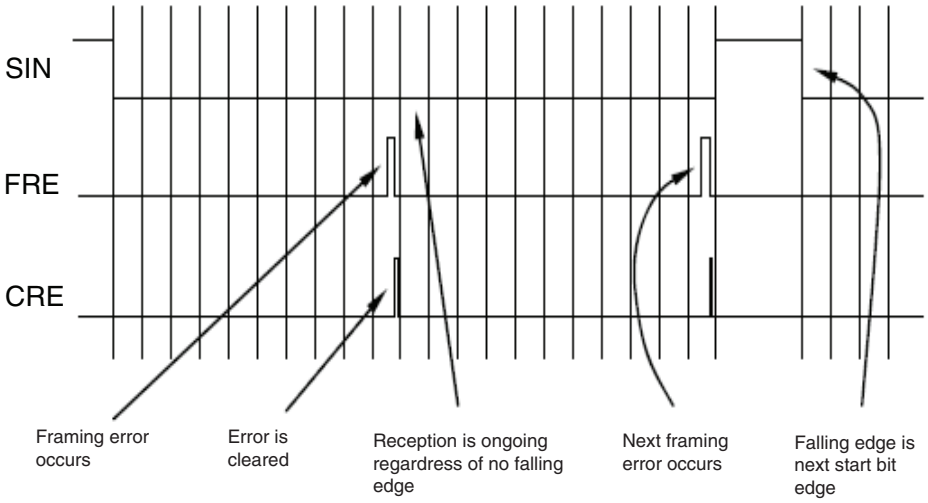

When reception is temporarily disabled (RXE = 1 → 0 → 1)

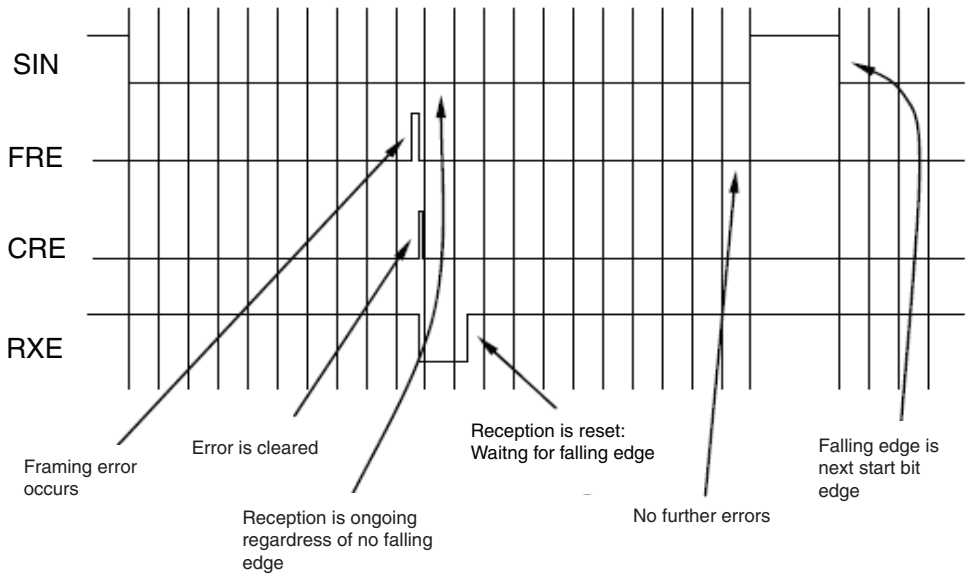

16. 8/10-bit A/D Converter

This chapter describes the functions and operations of the 8/10-bit A/D converter.

16.1 Overview
16.2 Configuration
16.3 Pins
16.4 Interrupt
16.5 Operations and Setting Procedure Example
16.6 Registers
16.7 Notes on Using 8/10-bit A/D Converter

16.1 Overview

The 8/10-bit A/D converter is a 10-bit successive approximation type of 8/10-bit A/D converter. It can be started by the software, the external trigger and the internal clock, with one input signal selected from multiple analog input pins.

16.1.1 A/D Conversion Function

The A/D converter converts analog voltage (input voltage) input through an analog input pin to an 8-bit or 10-bit digital value.

- The input signal can be selected from multiple analog input pins.
- The conversion speed can be set in a program. (can be selected according to operating voltage and frequency).
- An interrupt is generated when A/D conversion is completed.
- The completion of conversion can be determined according to the ADI bit in the ADC1 register.

To activate the A/D conversion function, use one of the following methods.

- Activation using the AD bit in the ADC1 register
- Continuous activation using the external pin (ADTG)
- Continuous activation using the 8/16-bit composite timer output TO00

16.2 Configuration

The 8/10-bit A/D converter consists of the following blocks:

- Clock selector (input clock selector for starting A/D conversion)
- Analog channel selector
- Sample-and-hold circuit
- Control circuit
- 8/10-bit A/D converter data register (upper/lower) (ADDH/ADDL)
- 8/10-bit A/D converter control register 1 (ADC1)
- 8/10-bit A/D converter control register 2 (ADC2)

The number of analog input pins and that of analog channels of the 8/10-bit A/D converter vary among products. For details, refer to the device data sheet.

In this chapter, "n" in a pin name represents the analog input pin number. For details of pin names of a product, refer to the device data sheet.

16.2.1 Block Diagram of 8/10-bit A/D Converter

Figure 16-1 is the block diagram of the 8/10-bit A/D converter.

Figure 16-1. Block Diagram of 8/10-bit A/D Converter

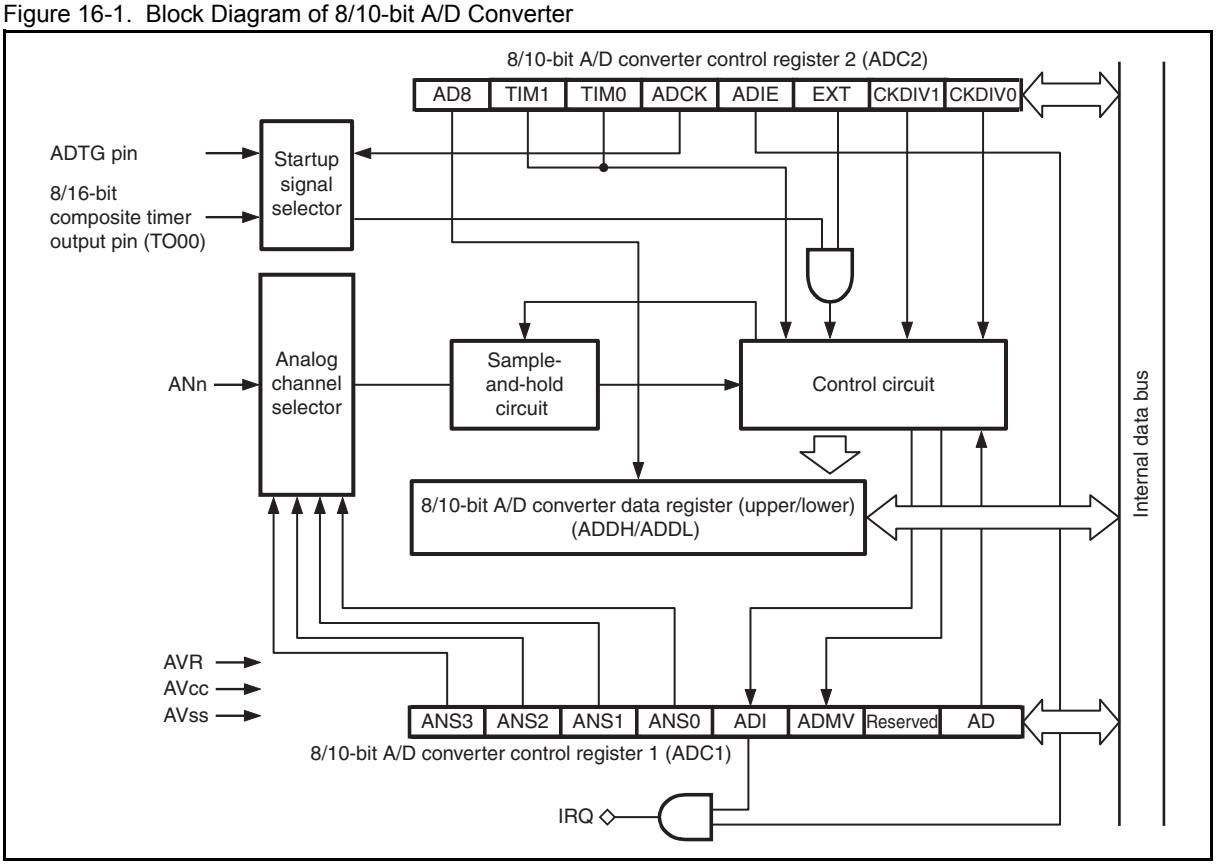

- Clock selector

This selects the A/D conversion clock with continuous activation having been enabled (ADC2:EXT = 1).

- Analog channel selector

This is the circuit selecting an input channel from several analog input pins.

- Sample-and-hold circuit

This circuit holds input voltage selected by the analog channel selector. By sampling the input voltage and holding it immediately after A/D conversion starts, this circuit prevents A/D conversion from being affected by the fluctuation in input voltage during the conversion (comparison).

- Control circuit

The A/D conversion function determines the values in the 10-bit A/D data register sequentially from MSB to LSB based on the voltage compare signal from the comparator. When A/D conversion is completed, the A/D conversion function sets the interrupt request flag bit (ADC1: ADI) to "1".

- 8/10-bit A/D converter data register (upper/lower) (ADDH/ADDL)

The upper two bits of 10-bit A/D data are stored in the ADDH register; the lower eight bits in the ADDL register.

If the A/D conversion precision bit (ADC2:AD8) is set to "1", the A/D conversion precision becomes 8-bit precision, and the upper eight bits of 10-bit A/D data are to be stored in the ADDL register.

- 8/10-bit A/D converter control register 1 (ADC1)

This register is used to enable and disable different functions, select an analog input pin, and check the status of the A/D converter.

- 8/10-bit A/D converter control register 2 (ADC2)

This register is used to select an input clock, enable and disable interrupts and control different functions of the A/D converter.

16.2.2 Input Clock

The 8/10-bit A/D converter uses an output clock from the prescaler as the input clock (operating clock).

16.3 Pins

This section describes the pins of the 8/10-bit A/D converter.

16.3.1 Pins of 8/10-bit A/D Converter

- ANn pin

When using the A/D conversion function, input to the ANn pin the analog voltage to be converted. To use an ANn pin as an analog input pin, write "0" to the bit in the port direction register (DDR) corresponding to that pin, and the value corresponding to that pin to the analog input pin select bits (ADC1:ANS[3:0]). A pin not used as an analog input pin can be used as a general-purpose I/O port even when the 8/10-bit A/D converter is in use.

- ADTG pin

This is a pin used to activate the A/D conversion function with an external trigger. Before using the ADTG pin to activate the A/D conversion function with an external trigger, set the pin as an input port using the corresponding DDR register.

- AV_{CC} pin

This is an 8/10-bit A/D converter power supply pin. Use this pin at the same potential as the V_{CC} pin. When A/D conversion precision is required, ensure that V_{CC} noise does not enter the AV_{CC} pin, or use a separate power supply. Connect the AV_{CC} pin to a power supply even when the 8/10-bit A/D converter is not in use.

- AV_{SS} pin

This is a ground pin of the 8/10-bit A/D converter. Use this pin at the same potential as the V_{SS} pin. When A/D conversion precision is required, ensure that V_{SS} noise does not enter the AV_{SS} pin. Connect the AV_{SS} pin to a ground (GND) even when the 8/10-bit A/D converter is not in use.

- AVR pin

This is the reference input pin for the 8/10-bit A/D converter. 10-bit A/D conversion is executed with the AVR pin and the AV_{SS} pin. Connect the AVR pin to the AV_{SS} pin when not using the 8/10-bit A/D converter.

16.4 Interrupt

The completion of conversion during the operation of the A/D converter is an interrupt source of the 8/10-bit A/D converter.

16.4.1 Interrupt During 8/10-bit A/D Converter Operation

When A/D conversion is completed, the interrupt request flag bit (ADC1:ADI) is set to "1". Then if the interrupt request enable bit has been enabled (ADC2:ADIE = 1), an interrupt request is made to the interrupt controller. Write "0" to the ADI bit using the interrupt service routine to clear the interrupt request.

The ADI bit is set to "1" when A/D conversion is completed, irrespective of the value of the ADIE bit.

The CPU cannot return from interrupt processing if the interrupt request flag bit (ADC1:ADI) is "1" with interrupt requests having been enabled (ADC2:ADIE = 1). Always clear the ADI bit in the interrupt service routine.

16.5 Operations and Setting Procedure Example

The 8/10-bit A/D converter can activate A/D conversion with the software or activate A/D conversion continuously according to the setting of the EXT bit in the ADC2 register.

16.5.1 Operations of 8/10-bit A/D Converter Conversion Function

- Software activation

To activate the A/D conversion function with the software, do the settings shown in Figure 16-2.

Figure 16-2. Settings for A/D Conversion Function (Software Activation)

	bit7	bit6	bit5	bit4	bit3	bit2	bit1	bit0
ADC1	ANS3	ANS2	ANS1	ANS0	ADI	ADMV	Reserved	AD
	◎	◎	◎	◎	◎	◎	0	1
ADC2	AD8	TIM1	TIM0	ADCK	ADIE	EXT	CKDIV1	CKDIV0
	◎	◎	◎	×	◎	0	◎	◎
ADDH	-	-	-	-	-	-	A/D converted value retained	
ADDL	A/D converted value retained							

◎: Bit to be used
× : Unused bit
0 : Set to "0"
1 : Set to "1"

When the A/D conversion function is activated, A/D conversion starts. In addition, the A/D conversion function can be re-activated even during conversion.

- Continuous activation

To execute continuous activation the A/D conversion function, do the settings shown in Figure 16-3.

Figure 16-3. Settings for A/D Conversion Function (Continuous Activation)

	bit7	bit6	bit5	bit4	bit3	bit2	bit1	bit0
ADC1	ANS3	ANS2	ANS1	ANS0	ADI	ADMV	Reserved	AD
	◎	◎	◎	◎	◎	◎	0	×
ADC2	AD8	TIM1	TIM0	ADCK	ADIE	EXT	CKDIV1	CKDIV0
	◎	◎	◎	◎	◎	1	◎	◎
ADDH	-	-	-	-	-	-	A/D converted value retained	
ADDL	A/D converted value retained							

◎: Bit to be used
× : Unused bit
0 : Set to "0"
1 : Set to "1"

When continuous activation is enabled, the A/D conversion function is activated at the rising edge of the input clock selected to start A/D conversion. Continuous activation is stopped when disabled (ADC2:EXT = 0).

16.5.2 Operations of A/D Conversion Function

This section explains the operations of 8/10-bit A/D converter.

1. When A/D conversion is started, the conversion flag bit is set (ADC1:ADMV = 1) and the selected analog input pin is connected to the sample-and-hold circuit.
2. The voltage in the analog input pin is loaded into a sample-and-hold capacitor in the sample-and-hold circuit during the sampling cycle. This voltage is held until A/D conversion is completed.
3. The comparator in the control circuit compares the voltage loaded into sample-and-hold capacitor with the A/D conversion reference voltage, from the most significant bit (MSB) to the least significant bit (LSB), and then transfers the results to the ADDH and ADDL registers.
   After the results have been transferred to the two registers, the conversion flag bit is cleared (ADC1:ADMV = 0) and the interrupt request flag bit is set to "1" (ADC1:ADI = 1).

Notes:

- The contents of the ADDH and ADDL registers are saved at the end of A/D conversion. Therefore, during A/D conversion, the values resulting from last conversion will be returned if the two registers are read.
- Do not change the analog input pin select bits (ADC1:ANS[3:0]) while AD conversion function is being used. During continuous activation in particular, disable continuous activation (ADC2:EXT = 0) before changing the analog input pin.
- A reset, or the start of the stop mode or watch mode causes the A/D converter to stop and the ADMV bit to be cleared to "0".

16.5.3 Setting Procedure Example

Below is an example of procedure for setting the 8/10-bit A/D converter:

- Initial settings

1. Set the input port. (DDR)
2. Set the interrupt level. (ILR*)
3. Select an A/D input pin. (ADC1:ANS[3:0])
4. Set the sampling time. (ADC2:TIM[1:0])
5. Select the clock. (ADC2:CKDIV[1:0])
6. Set A/D conversion precision. (ADC2:AD8)
7. Select the operating mode. (ADC2:EXT)
8. Select the start trigger. (ADC2:ADCK)
9. Enable interrupts. (ADC2:ADIE = 1)
10. Activate the A/D conversion function. (ADC1:AD = 1)

*: For details of the interrupt level setting register (ILR), refer to Chapter 5.Interrupts in this hardware manual and "Interrupt Source Table" in the device data sheet.

- Interrupt processing

1. Clear the interrupt request flag to "0". (ADC1:ADI = 0)
2. Read converted values. (ADDH, ADDL)
3. Activate the A/D conversion function. (ADC1:AD = 1)

16.6 Registers

This section describes the registers of the 8/10-bit A/D converter.

Table 16-1. List of 8/10-bit A/D Converter Registers

Register abbreviation	Register name	Reference
ADC1	8/10-bit A/D converter control register 1	16.6.1
ADC2	8/10-bit A/D converter control register 2	16.6.2
ADDH	8/10-bit A/D converter data register (upper)	16.6.3
ADDL	8/10-bit A/D converter data register (lower)	16.6.3

16.6.1 8/10-bit A/D Converter Control Register 1 (ADC1)

The 8/10-bit A/D converter control register 1 (ADC1) is used to enable and disable individual functions of the 8/10-bit A/D converter, select an analog input pin and check the status of the converter.

Register Configuration

bit	7	6	5	4	3	2	1	0
Field	ANS3	ANS2	ANS1	ANS0	ADI	ADMV	Reserved	AD
Attribute	R/W	R/W	R/W	R/W	R/W	R	W	W
Initial value	0	0	0	0	0	0	0	0

Register Functions

[bit7:4] ANS[3:0]: Analog input pin select bits

These bits select an analog input pin.

When A/D conversion is started (AD = 1) by the software (ADC2: EXT = 0), these bits can be modified simultaneously.

bit7:4	Details*
Writing "0000"	AN00 pin
Writing "0001"	AN01 pin
Writing "0010"	AN02 pin
Writing "0011"	AN03 pin
Writing "0100"	AN04 pin
Writing "0101"	AN05 pin
Writing "0110"	AN06 pin
Writing "0111"	AN07 pin
Writing "1000"	AN08 pin
Writing "1001"	AN09 pin
Writing "1010"	AN10 pin
Writing "1011"	AN11 pin

*: The number of analog input pins vary among products. For the number of analog input pins of a product, refer to its data sheet.

Notes:

- Do not write to ANS[3:0] any value other than those listed in the table above.
- When the ADMV bit is "1", do not modify these bits. Pins not used as analog input pins can be used as general-purpose I/O ports.

[bit3] ADI: Interrupt request flag bit

This bit detects the completion of A/D conversion.

When the A/D conversion function is used, the bit is set to "1" immediately after A/D conversion is complete.

Interrupt requests are output when this bit and the interrupt request enable bit (ADC2: ADIE) are both set to "1".

When "0" is written to this bit, it is cleared. Writing "1" to this bit does not change it or affect other bits.

When read by the read-modify-write (RMW) type of instruction, this bit always returns "1".

bit3	Details
Reading "0"	Indicates that A/D conversion has not been completed.
Reading "1"	Indicates that A/D conversion has been completed.
Writing "0"	Clears this bit.
Writing "1"	Has no effect on operation.

[bit2] ADMV: Conversion flag bit

This bit indicates that A/D conversion is in progress.

The bit is set to "1" during A/D conversion.

This bit is read-only. Writing a value to this bit has no effect on operation.

bit2	Details
Reading "0"	Indicates that A/D conversion is not executed.
Reading "1"	Indicates that A/D conversion is in progress.

[bit1] Reserved bit

Always set this bit to "0".

[bit0] AD: A/D conversion start bit

This bit starts the A/D conversion function with the software.

Writing "1" to the bit starts the A/D conversion function.

When the continuous start enable bit in the ADC2 register (ADC2:EXT) is "1", starting the A/D conversion with this bit is disabled.

With the EXT bit set to "0", when "1" is written to this bit while A/D conversion is in progress, A/D conversion restarts.

bit0	Details
Writing "0"	Has no effect on operation.
Writing "1"	Starts the A/D conversion function.

Note:

Writing "0" to this bit cannot stop the operation of the A/D conversion function. The read value of this bit is always "0".

16.6.2 8/10-bit A/D Converter Control Register 2 (ADC2)

The 8/10-bit A/D converter control register 2 (ADC2) is used to control different functions of the 8/10-bit A/D converter, select the input clock, and enable and disable interrupts.

Register Configuration

bit	7	6	5	4	3	2	1	0
Field	AD8	TIM1	TIM0	ADCK	ADIE	EXT	CKDIV1	CKDIV0
Attribute	R/W	R/W	R/W	R/W	R/W	R/W	R/W	R/W
Initial value	0	0	0	0	0	0	0	0

Register Functions

[bit7] AD8: Precision select bit

This bit selects the resolution of A/D conversion.

Writing "0" to this bit selects10-bit precision.

Writing "1" to this bit selects 8-bit precision. Reading the ADDL register can obtain 8-bit data.

bit7	Details
Writing "0"	10-bit precision
Writing "1"	8-bit precision

Note:

The data bits to be used are different depending on the resolution selected. Modify this bit only when the A/D converter has stopped operating.

[bit6:5] TIM[1:0]: Sampling time select bits

These bits select the sampling time.

Modify the sampling time according to operating conditions (voltage and frequency).

The CKIN value is determined by the clock select bits (ADC2:CKDIV[1:0]).

bit6:5	Details
Writing "00"	CKIN × 4
Writing "01"	CKIN × 7
Writing "10"	CKIN × 10
Writing "11"	CKIN × 16

Note:

Modify these bits only when the A/D converter has stopped operating.

[bit4] ADCK: External start signal select bit

This bit selects the start signal for external start (ADC2:EXT = 1).

bit4	Details
Writing "0"	Selects the ADTG pin as the pin used to start the A/D conversion function.
Writing "1"	Selects the 8/16-bit composite timer ch. 0 output pin (TO00) as the pin used to start the A/D conversion function.

[bit3] ADIE: Interrupt request enable bit

This bit enables or disables outputting the interrupt request to the interrupt controller.

When both this bit and the interrupt request flag bit (ADC1: ADI) have been set to "1", an interrupt request is output.

bit3	Details
Writing "0"	Disables outputting the interrupt request.
Writing "1"	Enables outputting the interrupt request.

[bit2] EXT: Continuous start enable bit

This bit selects whether to start the A/D conversion function with the software, or to continuously start the A/D conversion function whenever a rising edge of the input clock is detected.

bit2	Details
Writing "0"	Starts the A/D conversion function with the AD bit in the ADC1 register.
Writing "1"	Continuously start the A/D conversion function according to the clock selected by the ADCK bit in the ADC2 register.

[bit1:0] CKDIV[1:0]: Clock select bits

These bits select the clock (CKIN) to be used for A/D conversion. The input clock is generated by the prescaler. See Chapter 3.Clock Controller for details.

The sampling time varies according to the clock selected by these bits.

Modify these bits according to operating conditions (voltage and frequency).

bit1:0	Details (MCLK: machine clock)
Writing "00"	1 MCLK
Writing "01"	MCLK/2
Writing "10"	MCLK/4
Writing "11"	MCLK/8

Note:

Modify these bits only when the A/D converter has stopped operating.

16.6.3 8/10-bit A/D Converter Data Register (Upper/Lower) (ADDH/ADDL)

The 8/10-bit A/D converter data register (upper/lower) (ADDH/ADDL) store the results of 10-bit A/D conversion during 10-bit A/D conversion.
The upper two bits of 10-bit data are stored in the ADDH register and the lower eight bits the ADDL register.

Register Configuration

ADDH

bit	7	6	5	4	3	2	1	0
Field	—	—	—	—	—	—	SAR9	SAR8
Attribute	—	—	—	—	—	—	R	R
Initial value	0	0	0	0	0	0	0	0

ADDL

bit	7	6	5	4	3	2	1	0
Field	SAR7	SAR6	SAR5	SAR4	SAR3	SAR2	SAR1	SAR0
Attribute	R	R	R	R	R	R	R	R
Initial value	0	0	0	0	0	0	0	0

Register Functions

The upper two bits of 10-bit A/D data correspond to bit1 and bit0 in the ADDH register and the lower eight bits bit7 to bit0 in the ADDL register.

If the AD8 bit in ADC2 register is set to "1", 8-bit precision is selected. Reading the ADDL register can obtain 8-bit data.

These two registers are read-only registers. Writing data to them has no effect on operation.

In A/D conversion in which 8-bit precision is selected, SAR8 and SAR9 in the ADDH register become "0".

- A/D conversion function

When A/D conversion is started, the results of conversion are finalized and stored in the ADDH and ADDL registers after the conversion time according to the register settings elapses. After A/D conversion is completed and before the next A/D conversion is completed, read A/D data registers (conversion results), and clear the interrupt request flag bit (ADI) in the ADC1 register. During A/D conversion, the values of the ADDH and ADDL registers are results of the last A/D conversion.

16.7 Notes on Using 8/10-bit A/D Converter

This section provides notes on using the 8/10-bit A/D converter.

16.7.1 Notes on Using 8/10-bit A/D Converter

Note on setting the 8/10-bit A/D converter with a program

- The contents of the ADDH and ADDL registers are saved at the end of A/D conversion. Therefore, during A/D conversion, the values resulting from last conversion will be returned if the two registers are read.
- Do not change the analog input pin select bits (ADC1:ANS[3:0]) while AD conversion function is being used. During continuous activation in particular, disable continuous activation (ADC2: EXT = 0) before changing the analog input pin.
- A reset, or the start of the stop mode or watch mode causes the A/D converter to stop and the ADMV bit to be cleared to "0".
- The CPU cannot return from interrupt processing if the interrupt request flag bit (ADC1:ADI) is "1" with interrupt requests having been enabled (ADC2:ADIE = 1). Always clear the ADI bit in the interrupt service routine.

Note on interrupt requests

If the restart of A/D conversion (ADC1:AD = 1) and the completion of A/D conversion occur simultaneously, the interrupt request flag bit (ADC1:ADI) is set.

A/D conversion error

As | AVR - AVss | decreases, the A/D conversion error increases proportionately.

8/10-bit A/D converter analog input sequences

Turn on the analog input (ANn) and the 8/10-bit A/D converter power supply (AV_{CC}, AV_{SS}) at the same time as or after the time of turning on the digital power supply (V_{CC}).

Turn off the digital power supply (V_{CC}) at the same time as or after the time of turning off the analog input (ANn) and the 8/10-bit A/D converter power supply (AV_{CC}, AV_{SS}).

Ensure that AV_{CC}, AV_{SS}, and the analog input voltage do not exceed the voltage of the digital power supply (V_{CC}) when turning on or off the power supply of the 8/10-bit A/D converter.

Conversion time

The conversion speed of A/D conversion function is affected by clock mode, main clock oscillation frequency and main clock speed switching (gear function).

Example:

Sampling time = CKIN × (ADC2:TIM[1:0] settings)

Compare time = CKIN × 10 (fixed value) + MCLK

A/D converter startup time:minimum=MCLK + MCLK

maximum=MCLK + CKIN

Conversion time = A/D converter startup time + sampling time + compare time

- The conversion time may have an error of up to (1 CKIN – 1 MCLK), depending on the time at which A/D conversion starts.
- When setting the A/D converter in software, ensure that the settings satisfy the specifications of "sampling time" and "compare time" of the A/D converter mentioned in the device data sheet.

17. Low-Voltage Detection Reset Circuit

This chapter describes the function and operation of the low-voltage detection reset circuit.

17.1 Overview

17.2 Configuration

17.3 Pins

17.4 Operation

17.5 Registers

17.1 Overview

The low-voltage detection reset circuit monitors power supply voltage and generates a reset signal if the power supply voltage drops below the low-voltage detection voltage level.

17.1.1 Low-voltage Detection Reset Circuit

The low-voltage detection reset circuit monitors power supply voltage and generates a reset signal if the power supply voltage drops below the low-voltage detection voltage level.

The LVD reset voltage selection ID register (LVDR) selects the reset threshold voltage. The LVD reset circuit password register (LVDPW) sets a password to prevent the reset threshold voltage from being changed and the low-voltage detection reset circuit from being disabled accidentally.

At power-on, the lowest reset threshold voltage is selected in the LVDR register.

Upon power-on, the low-voltage detection reset circuit is automatically enabled. and can be disabled by the LVD reset circuit control register (LVDCC).

Refer to the device data sheet for details of the electrical characteristics.

17.2 Configuration

Figure 17-1. is the block diagram of the low-voltage detection reset circuit.

17.2.1 Block Diagram of Low-voltage Detection Reset Circuit

Figure 17-1. Block Diagram of Low-voltage Detection Reset Circuit

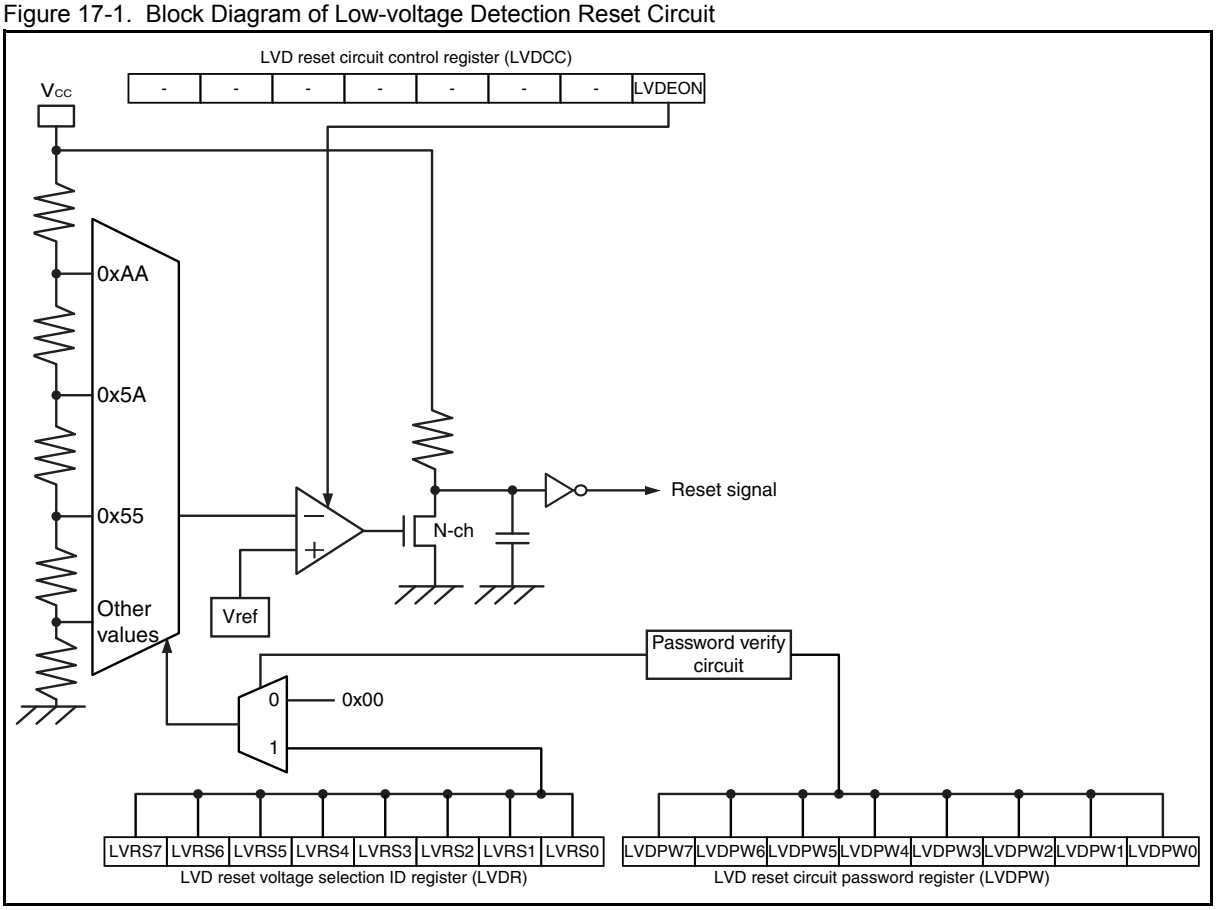

17.3 Pins

This section describes the pins of the low-voltage detection reset circuit.

17.3.1 Pins of Low-voltage Detection Reset Circuit

- V_{CC} pin

The low-voltage detection reset circuit monitors the voltage of this pin.

- V_{SS} pin

This is the GND pin serving as the reference for voltage detection.

- $\overline{RST}$ pin

The low-voltage detection reset signal is output inside the microcontroller and to this pin.

17.4 Operation

The low-voltage detection reset circuit generates a reset signal if the power supply voltage falls below the detection voltage.

17.4.1 Reset Threshold Voltage

To change the reset threshold voltage secured with a password, input the correct password to the LVDPW register in advance.

Keep the value of the LVDPW register unchanged after selecting a reset threshold voltage, otherwise the reset threshold voltage is initialized.

In the case of changing the reset threshold voltage in the LVDR register, the new threshold voltage does not start to take effect until the LVD reset threshold voltage transition stabilization time (t_{stb}) elapses. For details of t_{stb}, refer to the device data sheet.

17.4.2 Operation of Low-voltage Detection Reset Circuit

The low-voltage detection reset circuit generates a reset signal if the power supply voltage falls below the low-voltage detection voltage. Afterward, if the low-voltage detection reset circuit detects the low-voltage detection reset release voltage, it outputs a reset signal lasting for the oscillation stabilization wait time and then releases the reset.

For details of the electrical characteristics, refer to the device data sheet.

Figure 17-2. Operation of Low-voltage Detection Reset Circuit

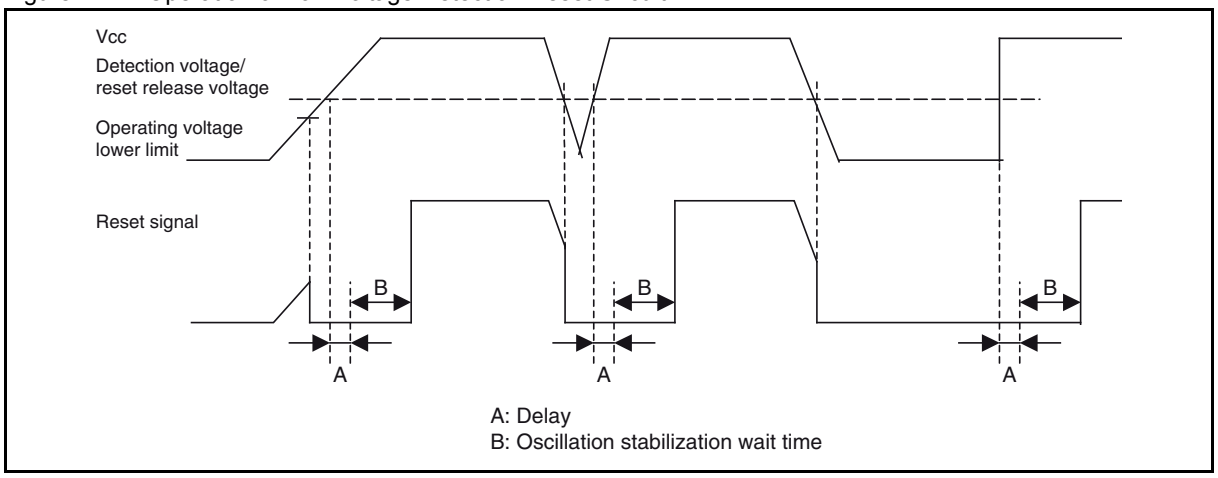

17.4.3 Operation in Standby Mode

The low-voltage detection reset circuit keeps operating even in standby mode (stop mode, sleep mode, subclock mode and watch mode).

17.5 Registers

This section describes the registers of low-voltage detection reset circuit.

Table 17-1. List of Low-voltage Detection Reset Circuit Registers

Register abbreviation	Register name	Reference
LVDR	LVD reset voltage selection ID register	17.5.1
LVDPW	LVD reset circuit password register	17.5.2
LVDCC	LVD reset circuit control register	17.5.3

17.5.1 LVD Reset Voltage Selection ID Register (LVDR)

The LVD reset voltage selection ID register (LVDR) selects the reset threshold voltage.

Register Configuration

bit	7	6	5	4	3	2	1	0
Field	LVRS7	LVRS6	LVRS5	LVRS4	LVRS3	LVRS2	LVRS1	LVRS0
Attribute	R/W	R/W	R/W	R/W	R/W	R/W	R/W	R/W
Initial value	0	0	0	0	0	0	0	0

Register Functions

[bit7:0] LVRS[7:0]: LVD reset voltage select bits

These bits select the reset threshold voltage with an 8-bit code. They are cleared upon a power-on reset.

bit7:0	Reset threshold voltage	
	Detection voltage (typical value)	Release voltage (typical value)
Writing "01010101"	2.7 V	2.8 V
Writing "01011010"	3 V	3.1 V
Writing "10101010"	3.2 V	3.3 V
Writing a value other than the above	2.6 V	2.7 V

Note:

The reset of the low-voltage detection reset circuit has no effect on the reset threshold voltage settings as the reset cannot clear this register.

17.5.2 LVD Reset Circuit Password Register (LVDPW)

The LVD reset circuit password register (LVDPW) sets a password required to change the reset threshold voltage and disable the low-voltage detection reset circuit.

Register Configuration

bit	7	6	5	4	3	2	1	0
Field	LVDPW7	LVDPW6	LVDPW5	LVDPW4	LVDPW3	LVDPW2	LVDPW1	LVPDW0
Attribute	R/W	R/W	R/W	R/W	R/W	R/W	R/W	R/W
Initial value	0	0	0	0	0	0	0	0

Register Functions

[bit7:0] LVDPW[7:0]: LVD reset circuit password bits

These bits set a password required to change the reset threshold voltage and to disable the low-voltage detection reset circuit.
Only when "0b11001000" is written to the LVDPW[7:0] bits can the reset threshold voltage be changed and the low-voltage detection reset circuit be disabled.

bit7:0	Details
Writing "11001000"	Enables changing the reset threshold voltage and disabling the low-voltage detection reset circuit.
Writing a value other than "11001000"	Initializes the reset threshold voltage to the lowest value and enables the low-voltage detection reset circuit.

Notes:

- Resetting the low-voltage detection reset circuit cannot initialize the LVDPW register.
- After changing the reset threshold voltage or the value of the LVDCC register, keep "0b11001000" as the value of the LVDPW register to prevent the reset threshold voltage and the LVDCC register from being initialized.

17.5.3 LVD Reset Circuit Control Register (LVDCC)

The LVD reset circuit control register (LVDCC) disables the low-voltage detection reset circuit.

Register Configuration

bit	7	6	5	4	3	2	1	0
Field	—	—	—	—	—	—	—	LVDEON
Attribute	—	—	—	—	—	—	—	R/W
Initial value	0	0	0	0	0	0	0	1

Register Functions

[bit7:1] Undefined bits

Their read values are always "0". Writing values to these bits has no effect on operation.

[bit0] LVDEON: LVD reset circuit disable bits

This bit disables the low-voltage detection reset circuit. The low-voltage detection reset circuit is automatically enabled upon power-on.
The low-voltage detection reset circuit can be disabled only when "0b11001000" is written to the LVDPW register.
After "0" is written to the LVDEON bit, writing "1" to the bit has no effect on operation.

bit0	Details
Writing "0"	Disables the low-voltage detection reset circuit.
Writing "1"	Has no effect on operation.

Notes:

- Resetting the low-voltage detection reset circuit cannot initialize the LVDCC register.
- After disabled by writing "0" to the LVDCC register, the low-voltage detection reset circuit can be enabled again only when the LVDCC register is initialized by a power-on reset.

18. Clock Supervisor Counter

This chapter describes the functions and operations of the clock supervisor counter.

18.1 Overview

18.2 Configuration

18.3 Operations

18.4 Registers

18.5 Notes on Using Clock Supervisor Counter

18.1 Overview

The clock supervisor counter checks the external clock frequency to detect the abnormal state of the external clock.

18.1.1 Overview of Clock Supervisor Counter

The clock supervisor counter checks the external clock frequency to detect the abnormal state of the external clock.

The clock supervisor counter automatically counts up the counter based on the external clock input within the time-base timer interval time selected from eight options.

The main oscillation clock or the suboscillation clock can be selected as the count clock of this module.

Note:

Operate the clock supervisor counter in main CR clock mode together with the hardware watchdog timer (running in standby mode).

Otherwise, it cannot detect the abnormal state of the external clock correctly and will hang up if the external clock stops.

See Chapter 8.Hardware / Software Watchdog Timer for the hardware watchdog timer (running in standby mode).

18.2 Configuration

The clock supervisor counter consists of the following blocks:

- Control circuit
- Clock Monitoring Control Register (CMCR)
- Clock Monitoring Data Register (CMDR)
- Time-base timer output selector
- Counter source clock selector

18.2.1 Block Diagram of Clock Supervisor Counter

Figure 18-1 is the block diagram of the clock supervisor counter.

Figure 18-1. Block Diagram of Clock Supervisor Counter

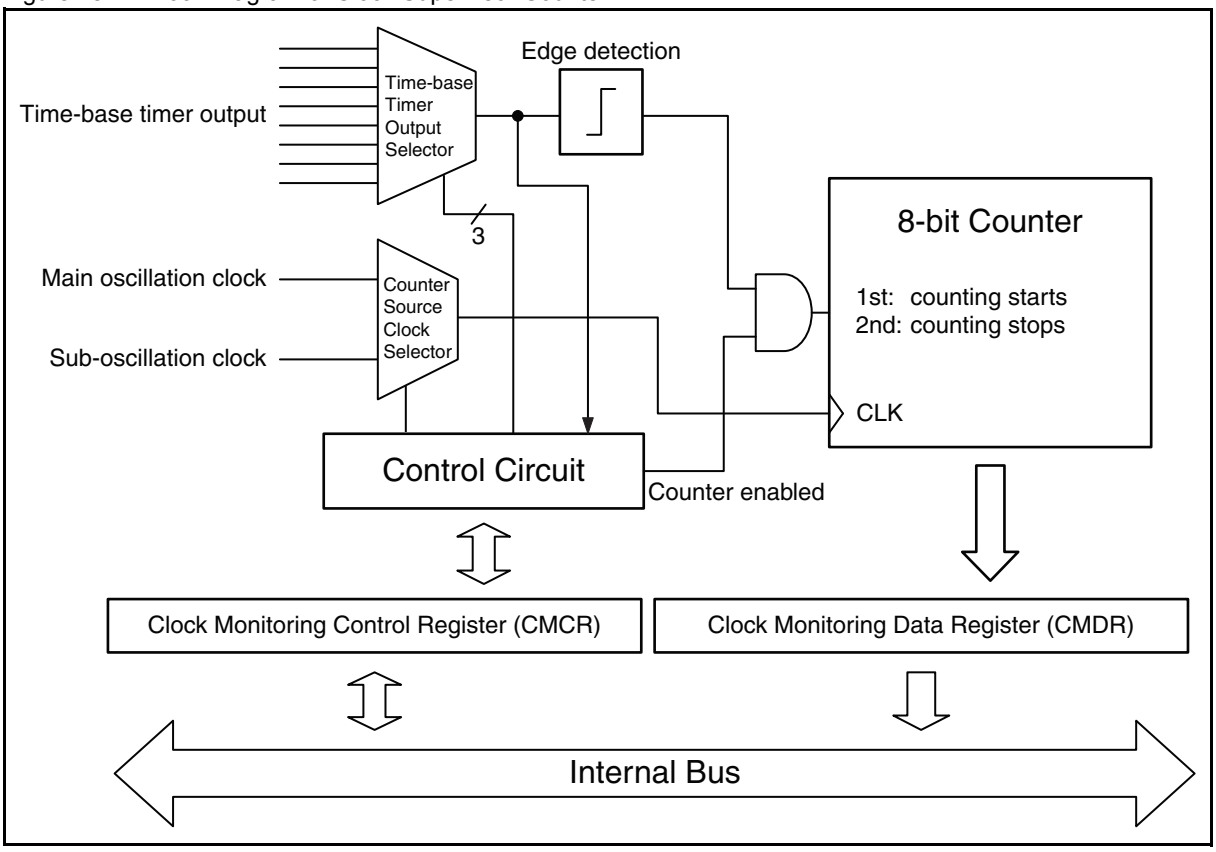

- Control circuit

This block controls the start and stop of the counter, the counter clock source, and the counter enable period based on the settings of the clock monitoring control register (CMCR).

- Clock Monitoring Control Register (CMCR)

This register is used to select a counter source clock, select a counter enable period from eight different time-base timer intervals, start the counter and check whether the counter is operating or not.

- Clock Monitoring Data Register (CMDR)

This register block is used to read the counter value after the counter stops. The software determines whether the external clock frequency is correct or not according to the contents of this register.

- Time-base timer interval selector

This block is used to select the counter enable period from eight different time-base timer intervals.

- Counter source clock selector

This block is used to select the counter source clock from the main oscillation clock and the suboscillation clock.

18.3 Operations

This section describes the operations of the clock supervisor counter.

18.3.1 Clock Supervisor Counter

- Clock Supervisor Counter Operation 1

The clock supervisor counter is first enabled by the software (CMCEN = 1), and then the clock supervisor counter operates with the time-base timer interval selected from eight options by the TBTSEL[2:0] bits. Between two rising edges of the time-base timer interval selected, the internal counter is clocked by the external clock.

The count clock of this module can be selected from the main oscillation clock and the suboscillation clock.

Figure 18-2. Clock Supervisor Counter Operation 1

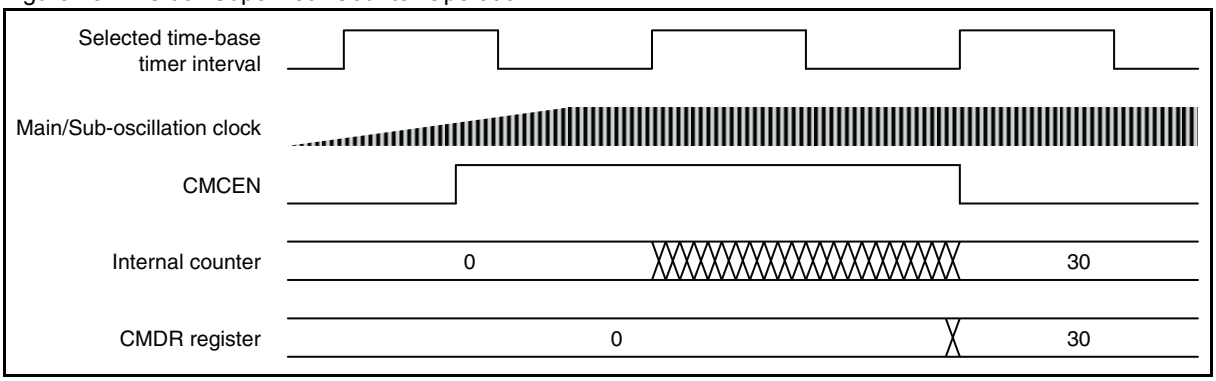

- Clock Supervisor Counter Operation 2

The CMDR register is cleared when the CMCEN bit changes from "0" to "1".

Figure 18-3. Clock Supervisor Counter Operation 2

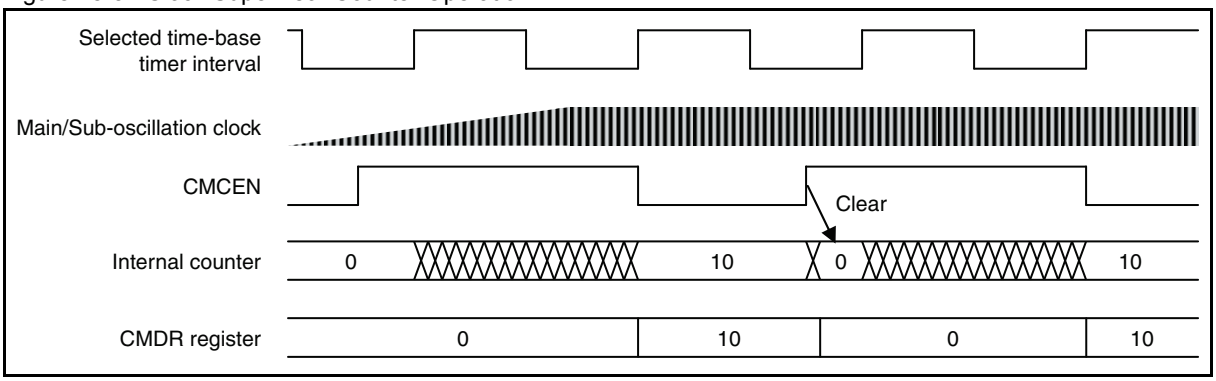

■ Clock Supervisor Counter Operation 3

The counter stops counting if it reaches "255". It cannot count further than "255".

Figure 18-4. Clock Supervisor Counter Operation 3

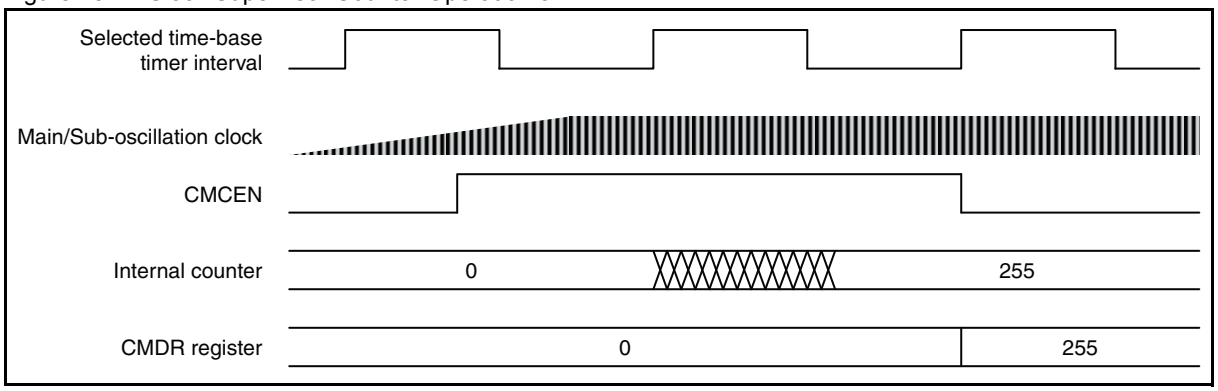

■ Clock Supervisor Counter Operation 4

If the external clock selected stops, the counter stops counting. According to this counter stop, the software identifies that the external clock selected is in the abnormal state.

Figure 18-5. Clock Supervisor Counter Operation 4

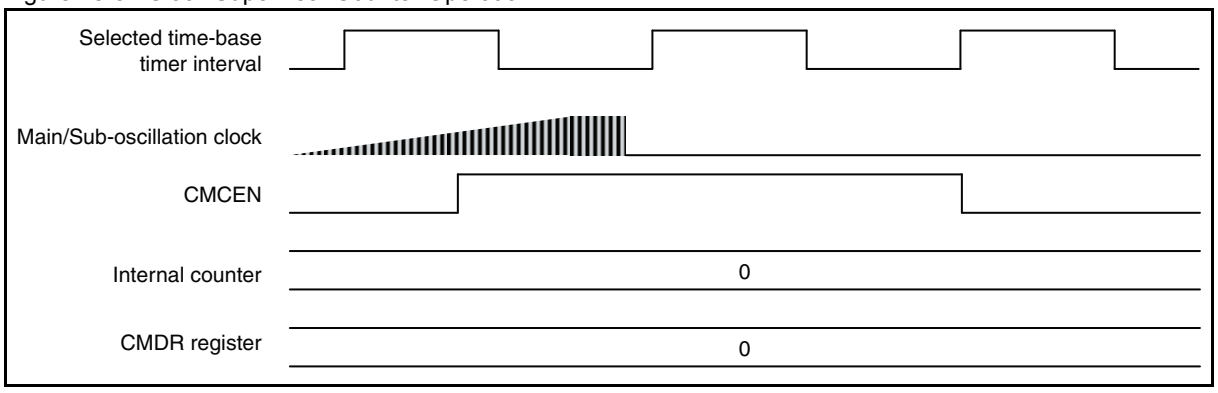

■ Clock Supervisor Counter Operation 5

The counter is cleared to "0" by the software if the CMCEN is set to "0" while the counter is operating.

Figure 18-6. Clock Supervisor Counter Operation 5

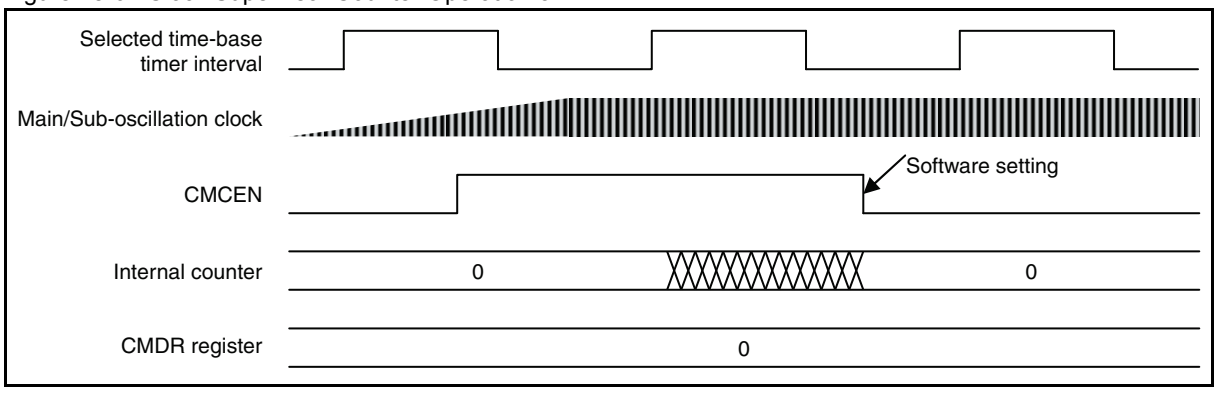

18.3.2 Table of Time-base Timer Intervals & Clock Supervisor Counter Values

Table 18-1 shows time-base timer intervals suitable for using different main CR clock frequencies to measure different external clocks.

Table 18-1. Table of Counter Values in Relation to TBTSEL Settings

Main CR (F_{CRH}) [MHz]	Main/ Sub-crystal oscillation [MHz]	Main CR error	Measurement error	TBTSEL2 to TBTSEL0							
				"000"	"001"	"010"	"011"	"100"	"101"	"110"	"111"
				(2^3×1/F_{CRH})	(2^5×1/F_{CRH})	(2^7×1/F_{CRH})	(2^9×1/F_{CRH})	(2^{11}×1/F_{CRH})	(2^{13}×1/F_{CRH})	(2^{15}×1/F_{CRH})	(2^{17}×1/F_{CRH})
4	0.03277	+2%	-1	0	0	0	1	7	31	130	525
		-2%	+1	1	1	1	3	9	35	137	548
	0.5	+2%	-1	0	0	6	30	124	500	2006	8030
		-2%	+1	1	3	9	33	131	523	2090	8360
	1	+2%	-1	0	2	14	61	249	1002	4014	16061
		-2%	+1	2	5	17	66	262	1045	4180	16719
	4	+2%	-1	2	14	61	249	1002	4014	16061	64249
		-2%	+1	5	17	66	262	1045	4180	16719	66874
	6	+2%	-1	4	22	93	375	1504	6022	24093	96375
		-2%	+1	7	25	98	392	1568	6270	25078	100311
	10	+2%	-1	8	38	155	626	2508	10038	40155	160626
		-2%	+1	11	41	164	654	2613	10449	41796	167184
	20	+2%	-1	18	77	312	1253	5018	20077	80312	321253
		-2%	+1	21	82	327	1307	5225	20898	83592	334368
	32.5	+2%	-1	30	126	508	2038	8155	32626	130508	522038
		-2%	+1	34	133	531	2123	8490	33960	135837	543347

: Recommended setting

: The counter value becomes "0" or "255".

Table 18-1 is calculated by the following equation:

$$\text{Counter value} = \frac{\left\{\begin{array}{l} 2^3 \times 1/F_{CRH}(\text{TBTSEL=000}) \\ 2^5 \times 1/F_{CRH}(\text{TBTSEL=001}) \\ 2^7 \times 1/F_{CRH}(\text{TBTSEL=010}) \\ 2^9 \times 1/F_{CRH}(\text{TBTSEL=011}) \\ 2^{11} \times 1/F_{CRH}(\text{TBTSEL=100}) \\ 2^{13} \times 1/F_{CRH}(\text{TBTSEL=101}) \\ 2^{15} \times 1/F_{CRH}(\text{TBTSEL=110}) \\ 2^{17} \times 1/F_{CRH}(\text{TBTSEL=111}) \end{array}\right\} \times \text{Main/Sub-Oscillation Clock Frequency}}{2} \pm 1 \text{ (Measurement error)}$$

*Omit the decimal places of “Counter value”.

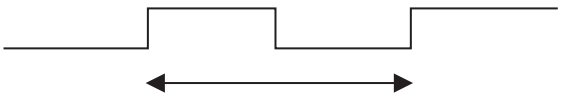

Within this period, the “Counter value” in the above equation is counted by the main/sub oscillation clock.

If the time-base timer interrupt is used to make the clock supervisor counter wait for the oscillation stabilization time, please satisfy the following condition:

Time-base Timer Interval > Main Oscillation / Suboscillation Stabilization Time × 1.05

e.g. F_{CH} = 4 MHz, F_{CRH} = 1 MHz, MWT[3:0] = 0b1111 (in WATR register)

Time-base Timer Interval > $\frac{(2^{14} - 2)}{4 \times 10^{6}} \times 1.05 \approx 4.3\ ms$



TBC[3:0] = 0b0110 ($2^{13} \times 1/F_{CRH}$)

Notes:

- See 7.1 Overview for time-base timer interval settings.
- See 3.3.3 Oscillation Stabilization Wait Time Setting Register (WATR) for main/sub-oscillation stabilization time settings.

18.3.3 Sample Operation Flow Chart of Clock Supervisor

Figure 18-7. Sample Operation Flow Chart of Clock Supervisor

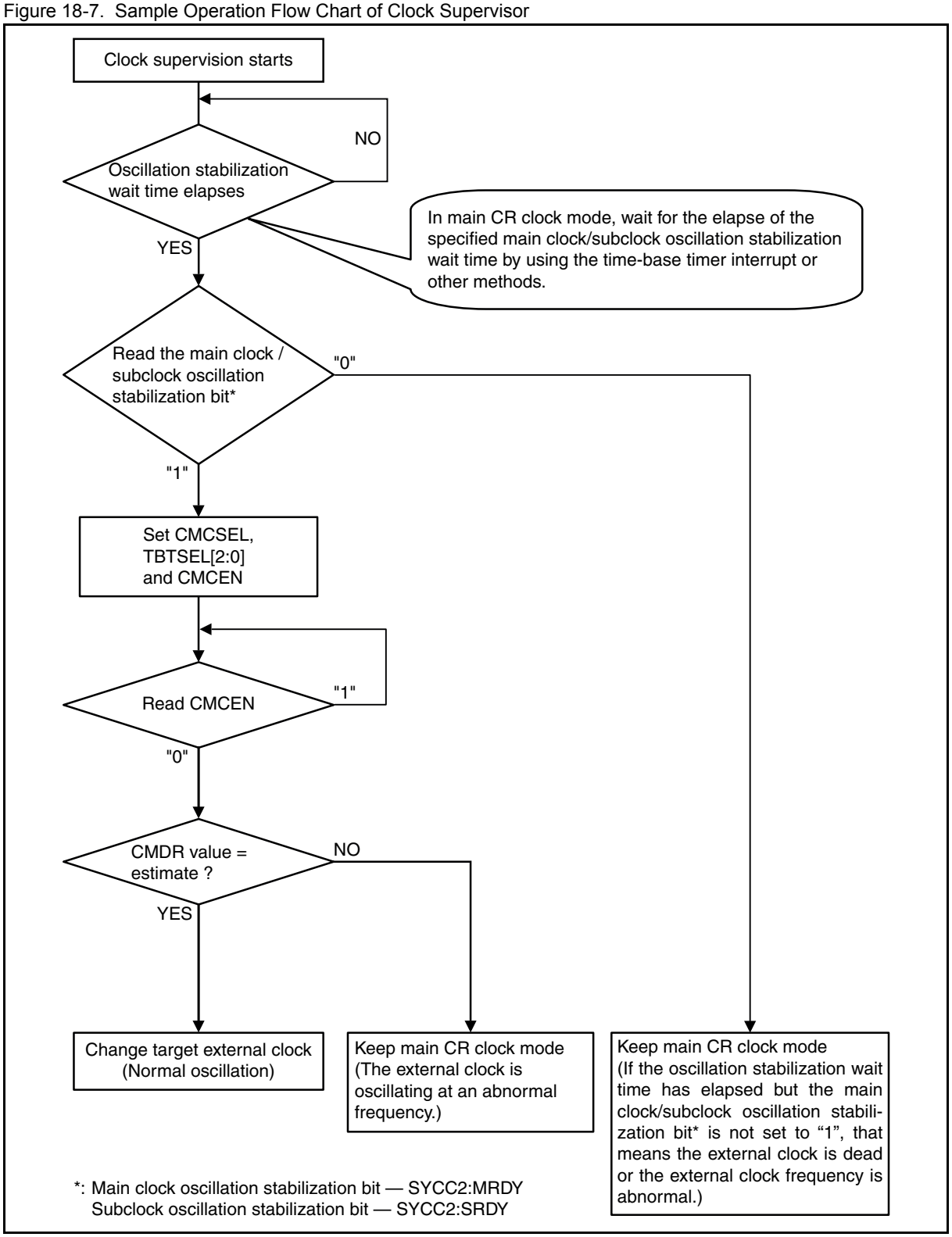

18.4 Registers

This section describes the registers of the clock supervisor counter.

Table 18-2. List of Clock Supervisor Counter Registers

Register abbreviation	Register name	Reference
CMDR	Clock monitoring data register	18.4.1
CMCR	Clock monitoring control register	18.4.2

18.4.1 Clock Monitoring Data Register (CMDR)

The clock monitoring data register (CMDR) is used to read the count value after the clock supervisor counter stops. The software can check whether the external clock frequency is correct or not according to the content of this register.

Register Configuration

bit	7	6	5	4	3	2	1	0
Field	CMDR7	CMDR6	CMDR5	CMDR4	CMDR3	CMDR2	CMDR1	CMDR0
Attribute	R	R	R	R	R	R	R	R
Initial value	0	0	0	0	0	0	0	0

Register Functions

The clock monitoring data register (CMDR) is used to read the counter value after the clock supervisor counter stops.

- The counter value can be read from the clock monitoring data register (CMDR). The software can check whether the external clock frequency is correct or not according to the counter value read and the time-base timer interval selected.

[bit7:0] CMDR[7:0]: Clock monitoring data bits

These bits indicate the clock supervisor counter value after the counter stops.

These bits are cleared if one of the following events occurs:

- Reset
- The CMCEN bit in the CMCR register (CMCR:CMCEN) is modified from "0" to "1" by the software.
- The CMCEN bit is modified from "1" to "0" by the software while the counter is running.
- After the external clock stops, the falling edge of the selected time-base timer clock is detected twice. (See Figure 18-9..)

Note:

The value of this register is "0b00000000" as long as the counter is operating (CMCR:CMCEN = 1).

18.4.2 Clock Monitoring Control Register (CMCR)

The clock monitoring control register (CMCR) is used to select the counter source clock, select a time-base timer interval as the counter enable period, start the counter and check whether the counter is running or not.

Register Configuration

bit	7	6	5	4	3	2	1	0
Field	—	—	Reserved	CMCSEL	TBTSEL2	TBTSEL1	TBTSEL0	CMCEN
Attribute	—	—	W	R/W	R/W	R/W	R/W	R/W
Initial value	0	0	0	0	0	0	0	0

Register Functions

[bit7:6] Undefined bits

Their read values are always "0". Writing values to these bits has no effect on operation.

[bit5] Reserved bit

Always set this bit to "0".

[bit4] CMCSEL: Counter clock select bit

This bit selects the counter source clock.

bit4	Details
Writing "0"	Selects the external main oscillation clock as the counter source clock.
Writing "1"	Selects the external suboscillation clock as the counter source clock.

[bit3:1] TBTSEL[2:0]: Time-base timer counter output select bits

These bits select the time-base timer interval.

The operation of the clock supervisor counter is enabled and disabled at specific times according to the time-base timer counter output selected by these bits.

The first rising edge of the interval selected enables the counter operation and the second rising edge of the same output disables the counter operation.

bit3:1	Details (F_{CRH}: main CR clock)
Writing "000"	$2^3 \times 1/F_{CRH}$
Writing "001"	$2^5 \times 1/F_{CRH}$
Writing "010"	$2^7 \times 1/F_{CRH}$
Writing "011"	$2^9 \times 1/F_{CRH}$
Writing "100"	$2^{11} \times 1/F_{CRH}$
Writing "101"	$2^{13} \times 1/F_{CRH}$
Writing "110"	$2^{15} \times 1/F_{CRH}$
Writing "111"	$2^{17} \times 1/F_{CRH}$

[bit0] CMCEN: Counter enable bit

This bit enables or disables the clock supervisor counter.

Writing "0" to this bit stops the counter and clears the CMDR register to "0b00000000".

Writing "1" to this bit enables the counter. The counter starts counting when detecting the rising edge of the time-base timer interval. It stops counting when detecting the second rising edge of the same interval.

This bit is automatically set to "0" when the counter stops.

bit0	Details
Writing "0"	Disables the counter operation.
Writing "1"	Enables the counter operation.

Notes:

- Do not modify the CMCSEL bit when the CMCEN bit is "1".
- Do not modify the TBTSEL[2:0] bits when the CMCEN bit is "1".

18.5 Notes on Using Clock Supervisor Counter

This section provides notes on using the clock supervisor counter.

18.5.1 Notes on Using Clock Supervisor Counter

- Restrictions

1. Operate the clock supervisor counter in main CR clock mode together with the hardware watchdog timer (running in standby mode). Otherwise, it cannot detect the abnormal state of the external clock correctly and will hang up if the external clock stops. See Chapter 8.Hardware / Software Watchdog Timer for the hardware watchdog timer (running in standby mode).
2. Use main CR clock mode only. Do not use any other clock mode.
3. If the time-base timer stops, the internal counter stops working. Do not clear the time-base timer while the clock supervisor counter is counting with the external clock.
4. Select a time-base timer interval that is sufficiently long for the clock supervisor counter to operate. See Table 18-1. for time-base timer intervals.
5. Read the CMDR register when CMCEN = 0. (The value of CMDR remains "0b00000000" while the clock supervisor counter is operating (CMCEN = 1).)
6. When using the clock supervisor counter, ensure that the machine clock cycle is shorter than half the time-base timer interval selected. If the machine clock cycle is longer than half the time-base timer interval selected, CMCEN may remain "1" even after the clock supervisor counter stops.

Table 18-3 shows the appropriate clock gear setting for each TBTSEL setting.

Table 18-3. Appropriate Clock Gear Setting for Respective TBTSEL Settings

DIV[1:0] (clock gear setting)	TBTSEL[2:0]		
	000	001	010 to 111
	$2^3 \times 1/F_{CRH}$	$2^5 \times 1/F_{CRH}$	$2^7 \times 1/F_{CRH}$ to $2^{17} \times 1/F_{CRH}$
00 ($1 \times 1/F_{CRH}$)	❍	❍	❍
01 ($4 \times 1/F_{CRH}$)	x	❍	❍
10 ($8 \times 1/F_{CRH}$)	x	❍	❍
11 ($16 \times 1/F_{CRH}$)	x	x	❍

❍: Recommended

x: Prohibited

- If the external clock stops while the clock supervisor counter is operating, and it restarts after the second rising edge of the time-base timer interval selected, CMCEN is set to "0" after the external clock restarts.

Figure 18-8. Clock Supervisor Counter Operation 1

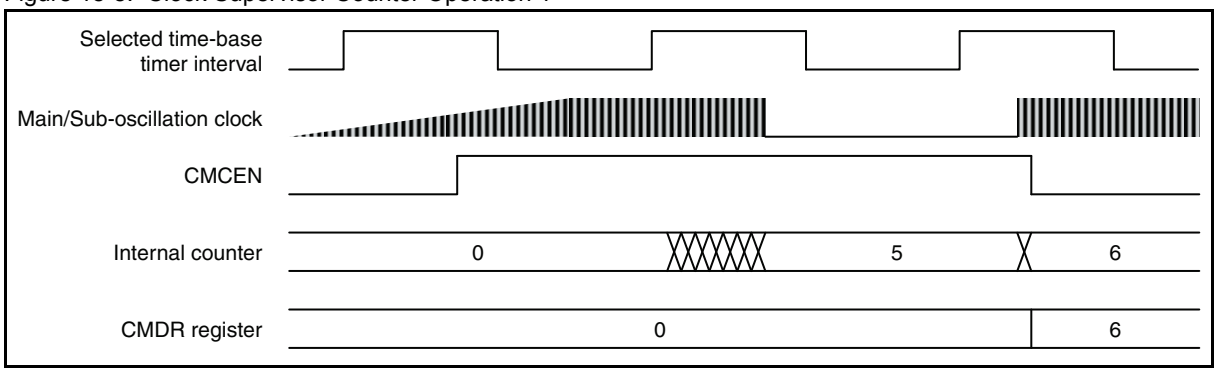

- With the clock supervisor counter running, if the external clock stops, CMCEN is set to "0" when a falling edge of the time-base timer interval selected is detected after the second rising edge of the same interval. The counter is cleared at the same falling edge.

Figure 18-9. Clock Supervisor Counter Operation 2

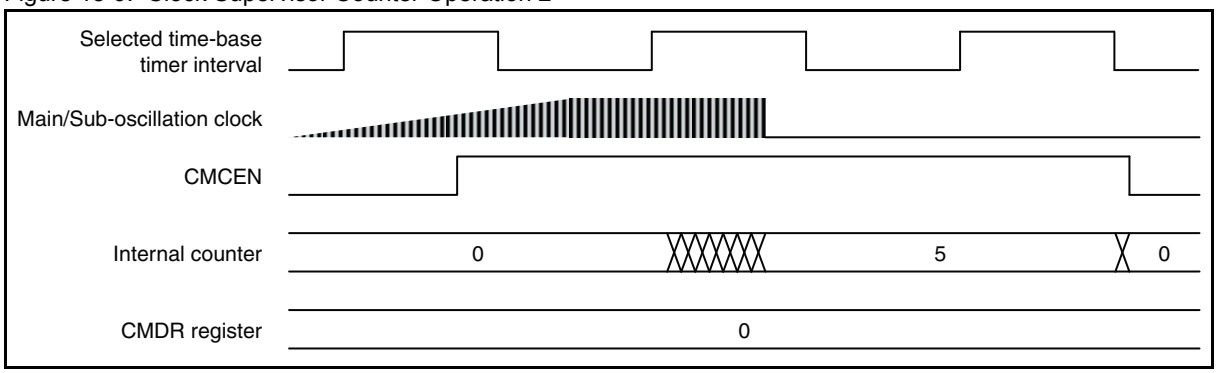

19. 8/16-bit PPG

This chapter describes the functions and operations of the 8/16-bit PPG.

19.1 Overview
19.2 Configuration
19.3 Channel
19.4 Pins
19.5 Interrupt
19.6 Operations and Setting Procedure Example
19.7 Registers
19.8 Notes on Using 8/16-bit PPG

19.1 Overview

The 8/16-bit PPG is an 8-bit reload timer module that uses pulse output control based on timer operation to perform PPG output. The 8/16-bit PPG also operates in cascade (8 bits + 8 bits) as 16-bit PPG.

19.1.1 Overview of 8/16-bit PPG

The number of pins and that of channels of the 8/16-bit PPG vary among products. For details, refer to the device data sheet.

In this chapter, "n" in a pin name and a register abbreviation represents the channel number. For details of pin names, register names and register abbreviations of a product, refer to the device data sheet.

The 8/16-bit PPG functions are summarized as follows.

- 8-bit PPG output independent operation mode

In this mode, the unit can operate as two 8-bit PPG (PPG timer n0 and PPG timer n1).

- 8-bit prescaler + 8-bit PPG output operation mode

The rising and falling edge detection pulses from the PPG timer n1 output can be input to the downcounter of the PPG timer n0 to enable variable-cycle 8-bit PPG output.

- 16-bit PPG output operation mode

The unit can also operate in cascade (PPG timer n1 (upper 8 bits) + PPG timer n0 (lower 8 bits)) as 16-bit PPG output.

- PPG output operation

In this operation, a variable-cycle pulse waveform is output in any duty ratio.

The unit can also be used as a D/A converter in conjunction with an external circuit.

- Output inversion mode

This mode can invert the PPG output value.

19.2 Configuration

This section shows the block diagram of the 8/16-bit PPG.

19.2.1 Block Diagram of 8/16-bit PPG

Figure 19-1 shows the block diagram of the 8/16-bit PPG.

Figure 19-1. Block Diagram of 8/16-bit PPG

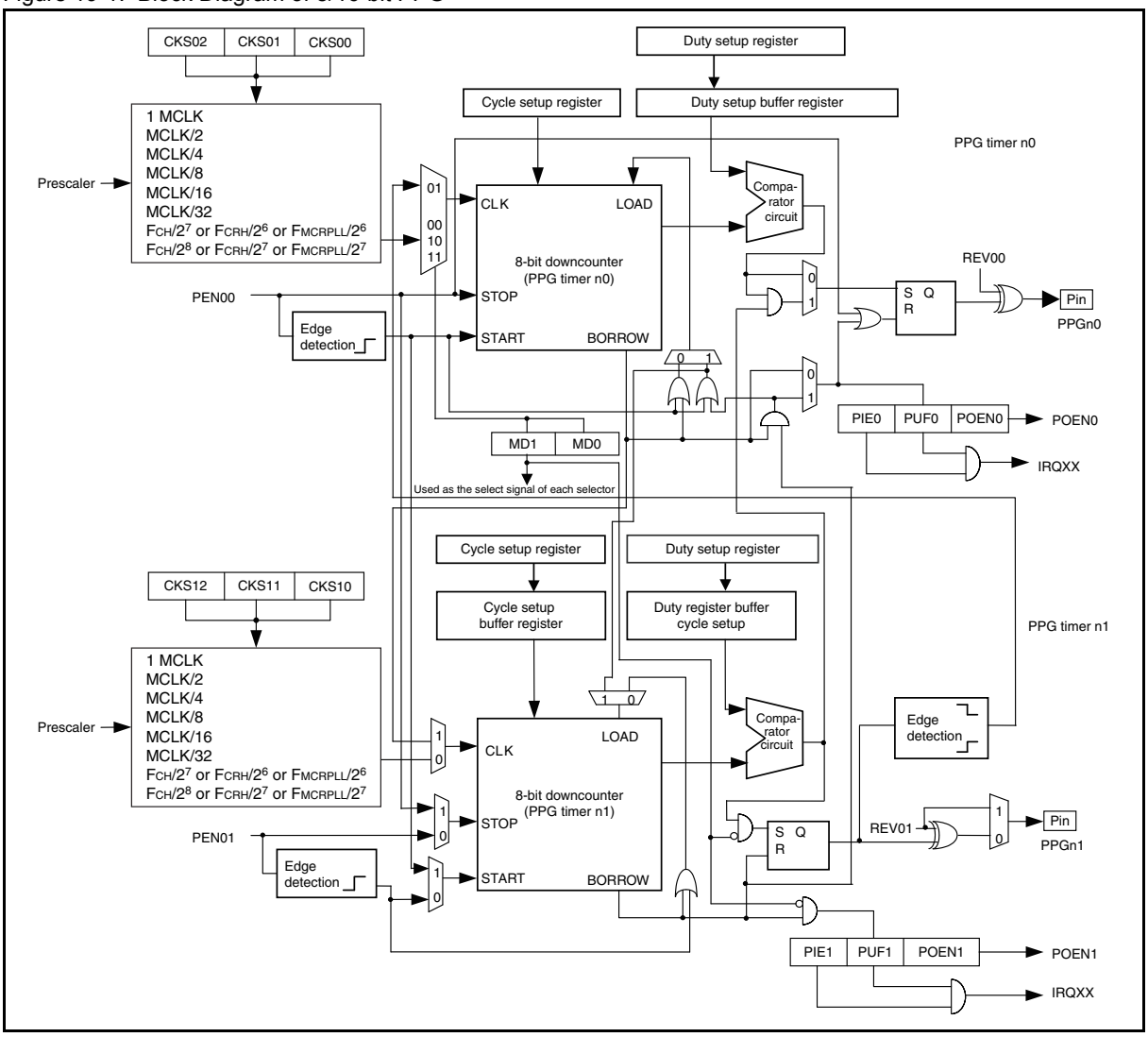

- Counter clock selector

The clock for the countdown of 8-bit downcounter is selected from eight types of internal count clocks.

- 8-bit downcounter

It counts down with the count clock selected with the count clock selector.

- Comparator circuit

The output is kept "H" level until the value of 8-bit downcounter is corresponding to the value of 8/16-bit PPG duty setup buffer register from the value of 8/16-bit set buffer register of PPG cycle.

Afterwards, after keep "L" level the output until the counter value is corresponding to "1", it keeps counting 8-bit downcounter

from the value of 8/16-bit PPG cycle setup buffer register.

- 8/16-bit PPG timer n1 control register (PCn1)

The operation condition on the PPG timer n1 side of 8/16-bit PPG timer is set.

- 8/16-bit PPG timer n0 control register (PCn0)

The operation mode of 8/16-bit PPG timer and the operation condition on the PPG timer n0 side are set.

- 8/16-bit PPG timer n1/n0 cycle setup buffer register (PPSn1/PPSn0)

The compare value for the cycle of 8/16-bit PPG timer is set.

- 8/16-bit PPG timer n1/n0 duty setup buffer register (PDSn1/PDSn0)

The compare value for "H" width of 8/16-bit PPG timer is set.

- 8/16-bit PPG start register

The start or the stop of 8/16-bit PPG timer is set.

- 8/16-bit PPG output inversion register

An initial level also includes the output of 8/16-bit PPG timer and it is reversed.

19.2.2 Input Clock

The 8/16-bit PPG uses the output clock from the prescaler as its input clock (count clock).

19.3 Channel

This section describes the channel of the 8/16-bit PPG.

19.3.1 Channel of 8/16-bit PPG

The 8/16-bit PPG consists of 8-bit PPG timer n0 and 8-bit PPG timer n1. They can be used respectively as two 8-bit PPGs or as a single 16-bit PPG.

Table 19-1 shows the pins and Table 19-2 the registers.

Table 19-1. Pins of 8/16-bit PPG

Pin name	Pin function
PPGn0	PPG timer n0 (8-bit PPG (n0), 16-bit PPG)
PPGn1	PPG timer n1 (8-bit PPG (n1), 8-bit prescaler)

Table 19-2. Registers of 8/16-bit PPG

Register abbreviation	Corresponding register (Name in this manual)
PCn1	8/16-bit PPG timer n1 control register
PCn0	8/16-bit PPG timer n0 control register
PPSn1	8/16-bit PPG timer n1 cycle setup buffer register
PPSn0	8/16-bit PPG timer n0 cycle setup buffer register
PDSn1	8/16-bit PPG timer n1 duty setup buffer register
PDSn0	8/16-bit PPG timer n0 duty setup buffer register
PPGS	8/16-bit PPG start register
REVC	8/16-bit PPG output inversion register

19.4 Pins

This section describes the pins of the 8/16-bit PPG.

19.4.1 Pins of 8/16-bit PPG

- PPGn0 pin and PPGn1 pin

These pins function both as general-purpose I/O ports and 8/16-bit PPG outputs.

PPGn0, PPGn1: A PPG waveform is output to these pins. The PPG waveform can be output by enabling the output by the 8/16-bit PPG timer n1/n0 control registers (PCn0: POEN0 = 1, PCn1: POEN1 = 1).

19.5 Interrupt

The 8/16-bit PPG outputs an interrupt request when a counter borrow is detected.

19.5.1 Interrupt of 8/16-bit PPG

Table 19-3 shows the interrupt control bits and interrupt sources of the 8/16-bit PPG.

Table 19-3. Interrupt Control Bits and Interrupt Sources of 8/16-bit PPG

Item	Description	
	PPG timer n1 (8-bit PPG, 8-bit prescaler)	PPG timer n0 (8-bit PPG, 16-bit PPG)
Interrupt request flag bit	PUF1 bit in PCn1	PUF0 bit in PCn0
Interrupt request enable bit	PIE1 bit in PCn1	PIE0 bit in PCn0
Interrupt source	Counter borrow of PPG cycle downcounter	

When a counter borrow occurs on the downcounter, the 8/16-bit PPG sets the counter borrow detection flag bit (PUF) in the 8/16-bit PPG timer n0/n1 control register (PC) to "1". When the interrupt request enable bit is enabled (PIE = 1), an interrupt request is output to the interrupt controller.

In 16-bit PPG mode, the 8/16-bit PPG timer n0 control register (PCn0) is available.

19.6 Operations and Setting Procedure Example

This section describes the operations of the 8/16-bit PPG.

The 8/16-bit PPG has the following three operating modes:

- 8-bit PPG independent mode
- 8-bit prescaler + 8-bit PPG mode
- 16-bit PPG mode

19.6.1 8-bit PPG Independent Mode

In this mode, the 8/16-bit PPG operates as two channels (PPG timer n0 and PPG timer n1) of the 8-bit PPG.

19.6.1.1 Setting 8-bit PPG Independent Mode

The 8/16-bit PPG requires the register settings shown in Figure 19-2 to operate in 8-bit PPG independent mode.

Figure 19-2. 8-bit PPG Independent Mode

	bit7	bit6	bit5	bit4	bit3	bit2	bit1	bit0
PCn1	-	-	PIE1	PUF1	POEN1	CKS12	CKS11	CKS10
			◎	◎	◎	◎	◎	◎
PCn0	MD1	MD0	PIE0	PUF0	POEN0	CKS02	CKS01	CKS00
	0	0	◎	◎	◎	◎	◎	◎
PPSn1	PH7	PH6	PH5	PH4	PH3	PH2	PH1	PH0
	Set PPG output cycle for PPG timer n1							
PPSn0	PL7	PL6	PL5	PL4	PL3	PL2	PL1	PL0
	Set PPG output cycle for PPG timer n0							
PDSn1	DH7	DH6	DH5	DH4	DH3	DH2	DH1	DH0
	Set PPG output duty for PPG timer n1							
PDSn0	DL7	DL6	DL5	DL4	DL3	DL2	DL1	DL0
	Set PPG output duty for PPG timer n0							
PPGS	-	-	PEN21	PEN20	PEN11	PEN10	PEN01	PEN00
	*	*	*	*	*	*	◎	◎
REVC	-	-	REV21	REV20	REV11	REV10	REV01	REV00
	*	*	*	*	*	*	◎	◎

◎: Used bit
0: Set to "0"
***: The bit status depends on the number of channels provided.**

19.6.1.2 Operation of 8-bit PPG Independent Mode

- This mode is selected when the operation mode select bits (MD[1:0]) in the 8/16-bit PPG timer n0 control register (PCn0) are set to "0b00".
- When the corresponding bit (PEN) in the 8/16-bit PPG start register (PPGS) is set to "1", the value in the 8/16-bit PPG cycle setup buffer register (PPS) is loaded to start down-count operation. When the count value reaches "1", the value in the cycle setup register is reloaded to repeat the counting.
- "H" is output to the PPG output synchronizing with the count clock. When the downcounter value matches the value in the 8/16-bit PPG timer n1/n0 duty setup buffer register (PDS). After "H" which is the value of duty setting is output, "L" is output to the PPG output.

If, however, the PPG output level reverse bit is set to "1", the PPG output is set and reset inversely from the above process.

Figure 19-3 shows the operation of the 8-bit PPG independent mode.

Figure 19-3. Operation of 8-bit PPG Independent Mode

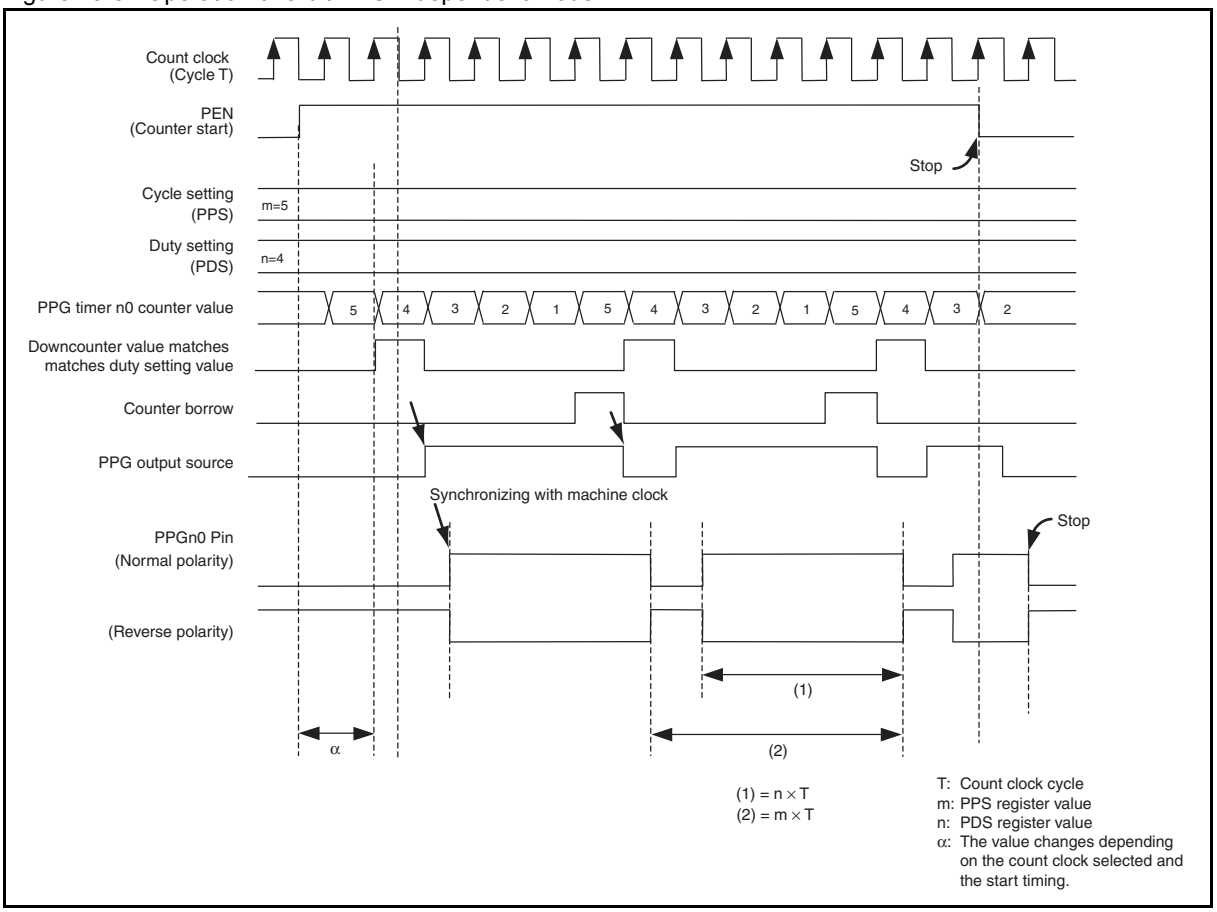

Example for setting the duty to 50%

When the PDS register is set to "0x02" with the PPS register set to "0x04", the PPG output is set at a duty ratio of 50% (half the value of the PPS register is set to the PDS register).

19.6.2 8-bit Prescaler + 8-bit PPG Mode

In this mode, the rising and falling edge detection pulses from the PPG timer n1 output can be used as the count clock of the PPG timer n0 downcounter to allow variable-cycle 8-bit PPG output from PPG timer n0.

19.6.2.1 Setting 8-bit Prescaler + 8-bit PPG Mode

The 8/16-bit PPG requires the register settings shown in Figure 19-4 to operate in 8-bit prescaler + 8-bit PPG mode.

Figure 19-4. Setting 8-bit Prescaler + 8-bit PPG Mode

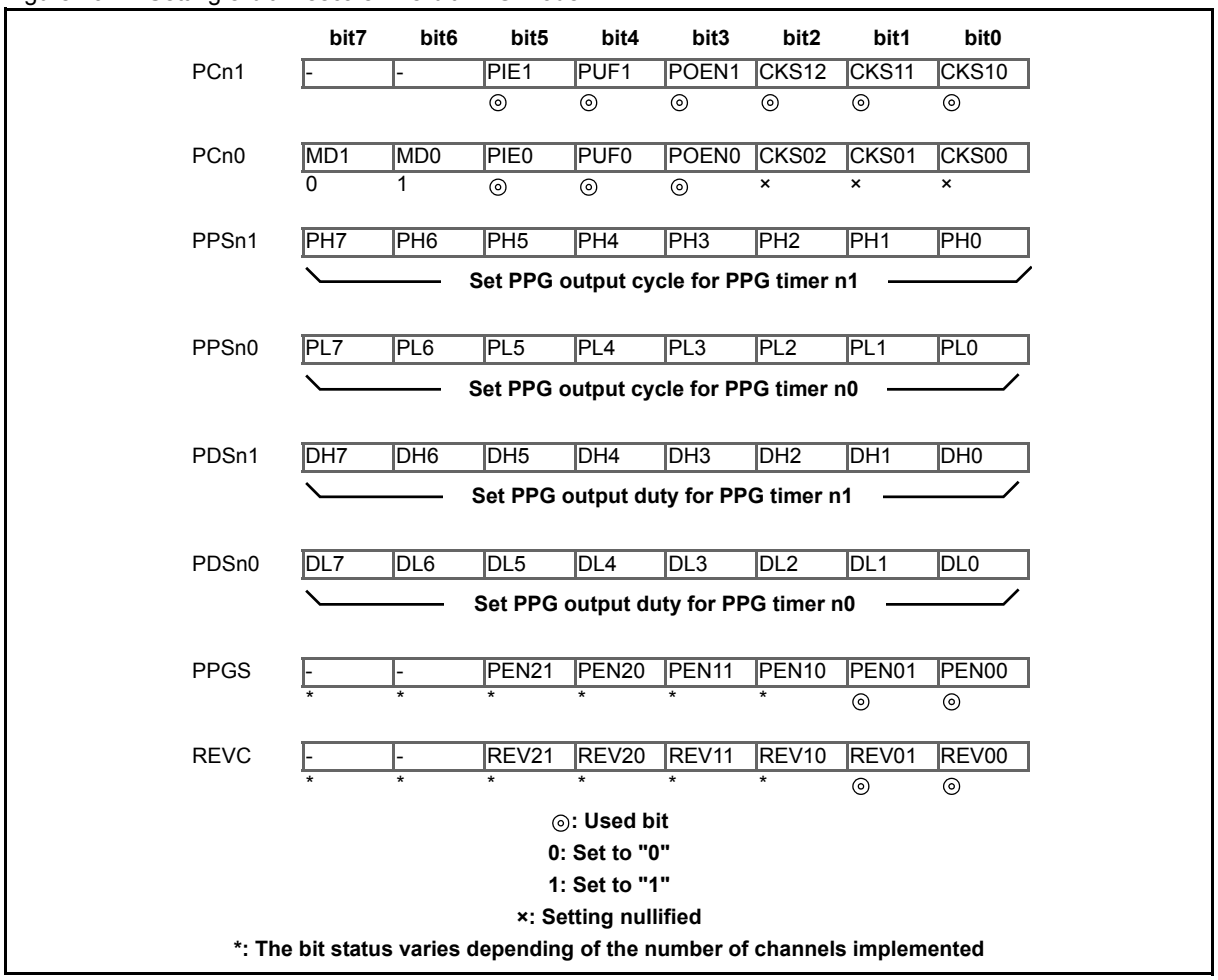

19.6.2.2 Operation of 8-bit Prescaler + 8-bit PPG Mode

- This mode is selected by setting the operation mode select bits (MD[1:0]) in the 8/16-bit PPG timer n0 control register (PCn0) to "0b01". This allows PPG timer n1 to be used as an 8-bit prescaler and PPG timer n0 to be used as an 8-bit PPG.
- When the PPG timer n1 (ch. n) downcounter operation enable bit (PEN01) is set to "1", the 8-bit prescaler (PPG timer n1) loads the value in the 8/16-bit PPG timer n1 cycle setup buffer register (PPSn1) and starts down-count operation. When the value of the downcounter matches the value in the 8/16-bit PPG timer n1 duty setup buffer register (PDSn1), the PPGn1 output is set to "H" synchronizing with the count clock. After "H" which is the value of duty setting is output, the PPGn1 output is set to "L". If the output level reverse signal (REV01) is "0", the polarity remains the same. If it is "1", the polarity is reversed and the signal is output to the PPGn1 pin.
- When the PPG timer n0 (ch. n) downcounter operation enable bit (PEN00) is set to "1", the 8-bit PPG (PPG timer n0) loads the value in the 8/16-bit PPG timer n0 cycle setup buffer register (PPSn0) and starts down-count operation (count clock = rising and falling edge detection pulses of PPGn1 output after PPG timer n1 operation is enabled). When the

count value reaches "1", the value in the PPSn0 register is reloaded to repeat the counting. When the value of the down-counter matches the value in the 8/16-bit PPG timer n0 duty setup buffer register (PDSn0), the PPGn0 output is set to "H" synchronizing with the count clock. After "H" which is the value of duty setting is output, the PPGn0 output is reset to "L". If the output level reverse bit (REV00) is "0", the polarity remains the same. If it is "1", the polarity is reversed and the signal is output to the PPGn0 pin.

- Set that the duty of the 8-bit prescaler (PPG timer n1) output to 50%.
- When PPG timer n0 is started with the 8-bit prescaler (PPG timer n1) being stopped, PPG timer n0 does not count.
- When the duty of the 8-bit prescaler (PPG timer n1) is set to 0% or 100%, PPG timer n0 does not perform counting as the 8-bit prescaler (PPG timer n1) output does not toggle.

Figure 19-5 shows the operation of 8-bit prescaler + 8-bit PPG mode.

Figure 19-5. Operation of 8-bit Prescaler + 8-bit PPG Mode

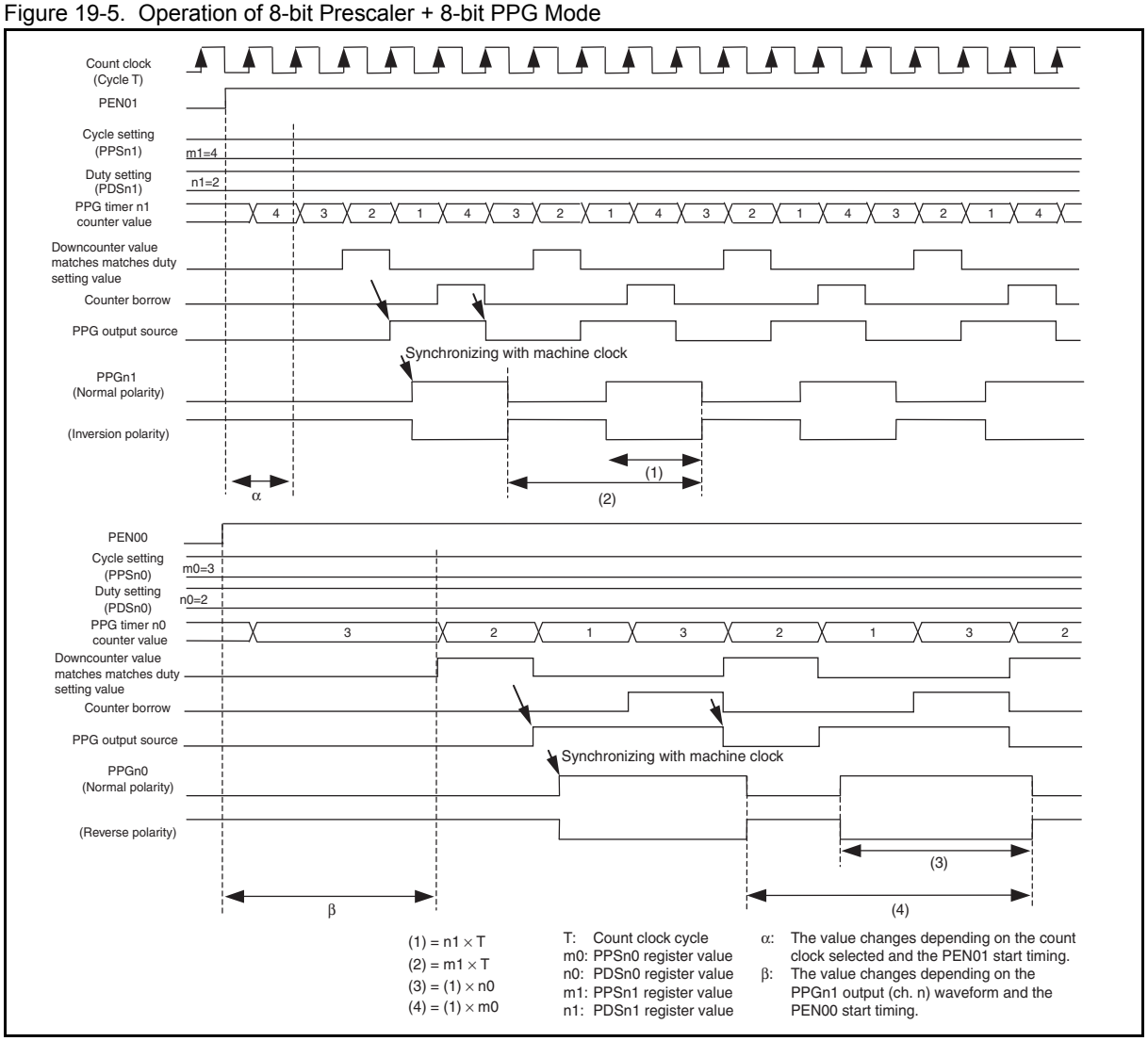

19.6.3 16-bit PPG Mode

In this mode, the 8/16-bit PPG can operate as a 16-bit PPG when PPG timer n1 and PPG timer n0 are assigned to the upper and lower bits respectively.

19.6.3.1 Setting 16-bit PPG Mode

The 8/16-bit PPG requires the register settings shown in Figure 19-6 to operate in 16-bit PPG mode.

Figure 19-6. Setting 16-bit PPG Mode

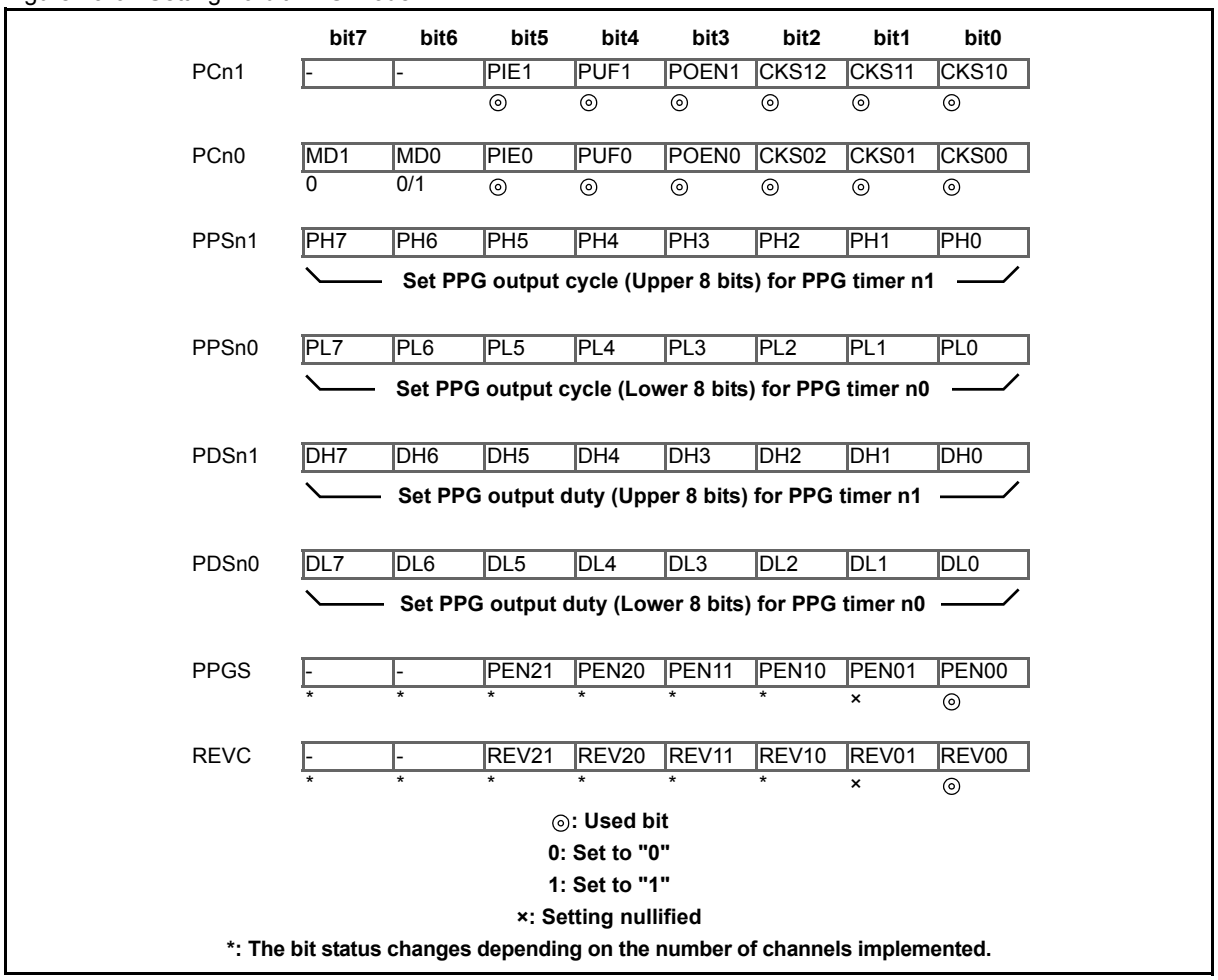

19.6.3.2 Operation of 16-bit PPG Mode

- This mode is selected by setting the operation mode select bits (MD[1:0]) in the PPG timer n0 control register (PCn0) to "0b10" or "0b11".
- When the PPG timer n0 (ch. n) downcounter operation enable bit (PEN00) is set to "1" in 16-bit PPG mode, the 8-bit downcounters (PPG timer n0) and 8-bit downcounter (PPG timer n1) load the values in the 8/16-bit PPG timer n1/n0 cycle setup buffer registers (PPSn1 for PPG timer n1 and PPSn0 for PPG timer n0) and start down-count operation. When the count value reaches "1", the values in the cycle setup register are reloaded and the counters repeat the counting.
- When the values of the downcounters match the values in the 8/16-bit PPG timer duty setup buffer registers (both the value in PDSn1 for PPG timer n1 and the value in PDSn0 for PPG timer n0), the PPGn0 pin is set to "H" synchronizing with the count clock. After "H" which is the value of duty setting is output, the PPGn0 pin is set to "L". If the output level reverse bit (REV00) is "0", the signal is output to the PPGn0 pin with the polarity unchanged. If it is set to "1", the polarity is reversed and the signal is output to the PPGn0 pin.

Figure 19-7 shows the operation of 16-bit PPG mode.

Figure 19-7. Operation of 16-bit PPG Mode

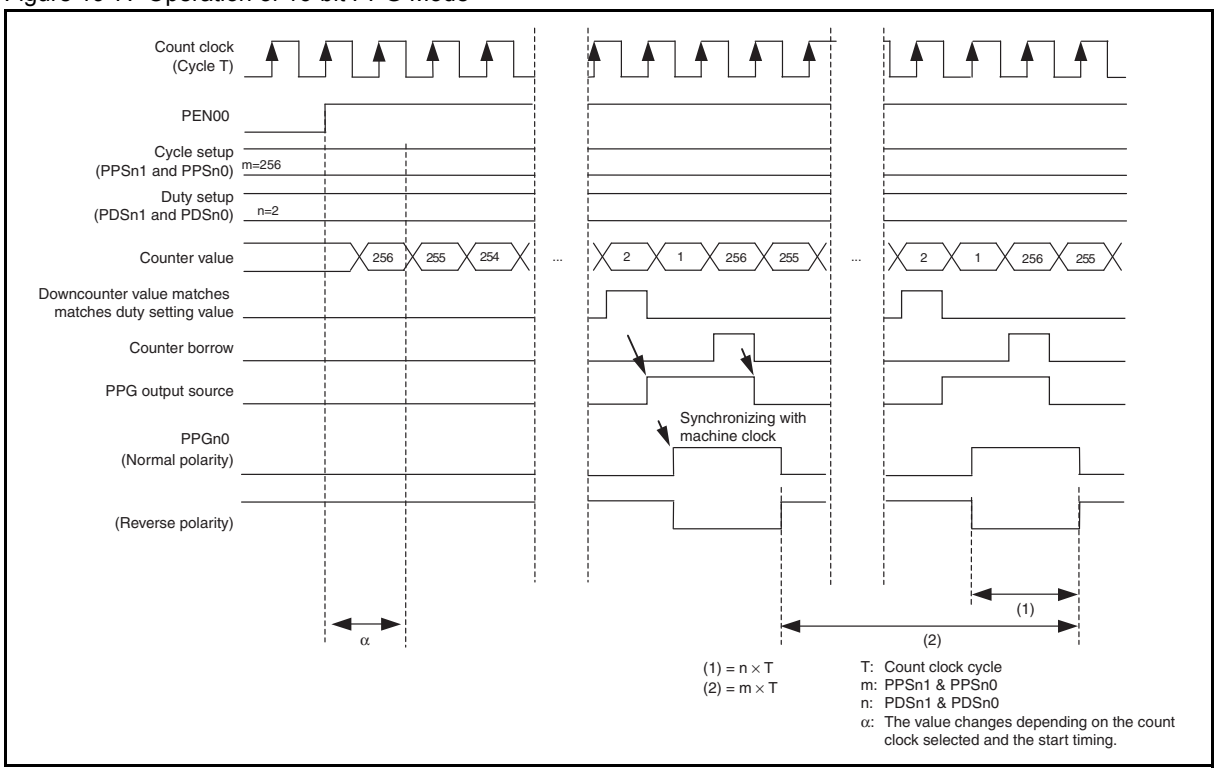

19.6.3.3 Setting Procedure Example

Below is an example of procedure for setting the 8/16-bit PPG ch. n.

■ Initial setup

1. Set the port output. (DDR)
2. Set the interrupt level. (ILR*)
3. Select the operating clock, enable the output and interrupt. (PCn1)
4. Select the operating clock, enable the output and interrupt, select the operation mode. (PCn0)
5. Set the cycle. (PPS)
6. Set the duty. (PDS)
7. Set the 8/16-bit PPG output reverse register. (REVC)
8. Start the 8/16-bit PPG. (PPGS)

*: For details of the interrupt level setting register (ILR), refer to Chapter 5.Interrupts in this hardware manual and " Interrupt Source Table" in the device data sheet.

■ Interrupt processing

1. Process any interrupt.
2. Clear the interrupt request flag. (PCn1:PUF1, PCn0:PUF0)
3. Start the 8/16-bit PPG. (PPGS)

19.7 Registers

This section describes the registers of the 8/16-bit PPG.
Table 19-4. List of 8/16-bit PPG Registers

Register abbreviation	Register name	Reference
PCn1	8/16-bit PPG timer n1 control register	19.7.1
PCn0	8/16-bit PPG timer n0 control register	19.7.2
PPSn1	8/16-bit PPG timer n1 cycle setting buffer register	19.7.3
PPSn0	8/16-bit PPG timer n0 cycle setting buffer register	19.7.3
PDSn1	8/16-bit PPG timer n1 duty setting buffer register	19.7.4
PDSn0	8/16-bit PPG timer n0 duty setting buffer register	19.7.4
PPGS	8/16-bit PPG start register	19.7.5
REVC	8/16-bit PPG output reverse register	19.7.6

19.7.1 8/16-bit PPG timer n1 Control Register (PCn1)

The 8/16-bit PPG timer n1 control register (PCn1) sets the operating conditions for PPG timer n1.

Register Configuration

bit	7	6	5	4	3	2	1	0
Field	—	—	PIE1	PUF1	POEN1	CKS12	CKS11	CKS10
Attribute	—	—	R/W	R/W	R/W	R/W	R/W	R/W
Initial value	0	0	0	0	0	0	0	0

Register Functions

[bit7:6] Undefined bits

Their read values are always "0". Writing values to these bits has no effect on operation,

[bit5] PIE1: Interrupt request enable bit

This bit controls interrupts of PPG timer n1.

The bit outputs an interrupt request (IRQ) when the counter borrow detection bit (PUF1) and the PIE1 bit are both set to "1".

bit5	Details
Writing "0"	Disables the PPG timer n1 interrupt.
Writing "1"	Enables the PPG timer n1 interrupt.

[bit4] PUF1: Counter borrow detection flag bit for PPG cycle downcounter

This bit serves as the counter borrow detection flag for the PPG cycle downcounter of the PPG timer n1.

This bit is set to "1" when a counter borrow occurs in 8-bit PPG independent mode or 8-bit prescaler + 8-bit PPG mode.

In 16-bit PPG mode, this bit is not set to "1" even when a counter borrow occurs.

Writing "1" to this bit has no effect on operation. Writing "0" to this bit clears it.

When read by the read-modify-write (RMW) type of instruction, this bit always returns "1".

bit4	Details
Reading "0"	Indicates that no counter borrow of PPG timer n1 has been detected.
Reading "1"	Indicates that a counter borrow of PPG timer n1 has been detected.
Writing "0"	Clears this bit.
Writing "1"	Has no effect on operation.

[bit3] POEN1: Output enable bit

This bit enables or disables the PPG timer n1 pin output.

Setting this bit to "1" in 16-bit PPG mode sets the PPG timer n1 pin as an output pin. (The setting value of REV01 is output. "L" output is supplied when REV01 is "0".)

bit3	Details
Writing "0"	The PPG timer n1 pin functions as a general-purpose I/O port.
Writing "1"	The PPG timer n1 pin functions as a PPG output pin.

[bit2:0] CKS1[2:0]: Operating clock select bits

These bits select the operating clock for 8-bit downcounter of the PPG timer n1.

The operating clock is generated from the prescaler. For details, see 3.9 Operation of Prescaler.

In 16-bit PPG mode, the settings of these bits have no effect on the operation.

bit2:0	Details (MCLK: machine clock, F_{CH}: main clock, F_{CRH}: main CR clock, F_{MCRPLL}: main CR PLL clock)
Writing "000"	1 MCLK
Writing "001"	MCLK/2
Writing "010"	MCLK/4
Writing "011"	MCLK/8
Writing "100"	MCLK/16
Writing "101"	MCLK/32
Writing "110"	$F_{CH}/2^7$ or $F_{CRH}/2^6$ or $F_{MCRPLL}/2^6$
Writing "111"	$F_{CH}/2^8$ or $F_{CRH}/2^7$ or $F_{MCRPLL}/2^7$

Note:

In subclock mode or sub-CR clock mode, since the time-base timer stops operating, setting CKS1[2:0] to "0b110" or "0b111" is prohibited.

19.7.2 8/16-bit PPG timer n0 Control Register (PCn0)

The 8/16-bit PPG timer n0 control register (PCn0) sets the operating conditions and the operation mode for PPG timer n0.

Register Configuration

bit	7	6	5	4	3	2	1	0
Field	MD1	MD0	PIE0	PUF0	POEN0	CKS02	CKS01	CKS00
Attribute	R/W	R/W	R/W	R/W	R/W	R/W	R/W	R/W
Initial value	0	0	0	0	0	0	0	0

Register Functions

[bit7:6] MD[1:0]: Operating mode bits

These bits select the PPG operation mode.

Do not modify the settings of these bits during counting.

bit7:6	Details
Writing "00"	8-bit PPG independent mode
Writing "01"	8-bit prescaler + 8-bit PPG mode
Writing "10"	16-bit PPG mode
Writing "11"	

[bit5] PIE0: Interrupt request enable bit

This bit controls interrupts of PPG timer n0.

In 16-bit PPG mode, use this bit to control the interrupt request of the 8/16-bit PPG.

The bit outputs an interrupt request (IRQ) when the counter borrow detection bit (PUF0) and the PIE0 bit are both set to "1".

bit5	Details
Writing "0"	Disables the PPG timer n0 interrupt.
Writing "1"	Enables the PPG timer n0 interrupt.

[bit4] PUF0: Counter borrow detection flag bit for PPG cycle downcounter

This bit serves as the counter borrow detection flag for the PPG cycle downcounter of the PPG timer n0.

In 16-bit PPG mode, only this bit is effective and the PUF1 bit in the PCn1 register has no effect on operation.

Note:

In 8-bit PPG independent mode or 8-bit prescaler + 8-bit PPG mode, counter borrow detection is always enabled.

Writing "1" to this bit has no effect on operation. Writing "0" to this bit clears it.

When read by the read-modify-write (RMW) type of instruction, this bit always returns "1".

bit4	Details
Reading "0"	Indicates that no counter borrow of PPG timer n0 has been detected.
Reading "1"	Indicates that a counter borrow of PPG timer n0 has been detected.
Writing "0"	Clears this bit.
Writing "1"	Has no effect on operation.

[bit3] POEN0: Output enable bit

This bit enables or disables the PPG timer n0 pin output.

In 16-bit PPG mode, since the 8/16-bit PPG outputs pulse wave through the PPG timer n0 pin, this bit controls the 8/16-bit PPG output.

bit3	Details
Writing "0"	The PPG timer n0 pin functions as a general-purpose I/O port.
Writing "1"	The PPG timer n0 pin functions as a PPG output pin.

[bit2:0] CKS0[2:0]: Operating clock select bits

These bits select the operating clock for 8-bit downcounter of the PPG timer n0.

The operating clock is generated from the prescaler. For details, see 3.9 Operation of Prescaler.

In 8-bit prescaler + 8-bit PPG mode, the rising and falling edge detection pulses from the PPG timer n1 output are used as the count clock for PPG timer n0. Therefore, the settings of these bits have no effect on operation.

In 16-bit PPG mode, use these bits to select the operating clock.

bit2:0	Details (MCLK: machine clock, F_{CH}: main clock, F_{CRH}: main CR clock, F_{MCRPLL}: main CR PLL clock)
Writing "000"	1 MCLK
Writing "001"	MCLK/2
Writing "010"	MCLK/4
Writing "011"	MCLK/8
Writing "100"	MCLK/16
Writing "101"	MCLK/32
Writing "110"	$F_{CH}/2^7$ or $F_{CRH}/2^6$ or $F_{MCRPLL}/2^6$
Writing "111"	$F_{CH}/2^8$ or $F_{CRH}/2^7$ or $F_{MCRPLL}/2^7$

Note:

In subclock mode or sub-CR clock mode, since the time-base timer stops operating, setting CKS0[2:0] to "0b110" or "0b111" is prohibited.

19.7.3 8/16-bit PPG timer n1/n0 Cycle Setup Buffer Register (PPSn1/PPSn0)

The 8/16-bit PPG timer n1/n0 cycle setup buffer register (PPSn1/PPSn0) sets the PPG output cycle.

Register Configuration

PPSn1

bit	7	6	5	4	3	2	1	0
Field	PH7	PH6	PH5	PH4	PH3	PH2	PH1	PH0
Attribute	R/W	R/W	R/W	R/W	R/W	R/W	R/W	R/W
Initial value	1	1	1	1	1	1	1	1

PPSn0

bit	7	6	5	4	3	2	1	0
Field	PL7	PL6	PL5	PL4	PL3	PL2	PL1	PL0
Attribute	R/W	R/W	R/W	R/W	R/W	R/W	R/W	R/W
Initial value	1	1	1	1	1	1	1	1

Register Functions

The PPSn1 and PPSn0 registers set the PPG output cycle.

- In 16-bit PPG mode, PPSn1 serves as the upper 8 bits, while PPSn0 serves as the lower 8 bits.
- In 16-bit PPG mode, write the upper bits before the lower bits. When only the upper bits are written, the previously written value is reused in the next load.
- 8-bit mode: Cycle = max. 255 (0xFF) × Input clock cycle
- 16-bit mode: Cycle = max. 65535 (0xFFFF) × Input clock cycle
- PPSn1 and PPSn0 are initialized upon reset.
- Do not set the cycle to "0x00" or "0x01" when using the unit in 8-bit PPG independent mode or 8-bit prescaler mode + 8-bit PPG mode.
- Do not set the cycle to "0x0000" or "0x0001" when using the unit in 16-bit PPG mode.
- If the cycle settings are modified during the operation, the modified settings will be effective from the next PPG cycle.

19.7.4 8/16-bit PPG timer n1/n0 Duty Setup Buffer Register (PDSn1/PDSn0)

The 8/16-bit PPG timer n1/n0 duty setup buffer register (PDSn1/PDSn0) sets the duty of the PPG output.

Register Configuration

PDSn1

bit	7	6	5	4	3	2	1	0
Field	DH7	DH6	DH5	DH4	DH3	DH2	DH1	DH0
Attribute	R/W	R/W	R/W	R/W	R/W	R/W	R/W	R/W
Initial value	1	1	1	1	1	1	1	1

PDSn0

bit	7	6	5	4	3	2	1	0
Field	DL7	DL6	DL5	DL4	DL3	DL2	DL1	DL0
Attribute	R/W	R/W	R/W	R/W	R/W	R/W	R/W	R/W
Initial value	1	1	1	1	1	1	1	1

Register Functions

The PDSn1 and PDSn0 registers set the duty of the PPG output ("H" pulse width when normal polarity).

- In 16-bit PPG mode, PDSn1 serves as the upper 8 bits while PDSn0 serves as the lower 8 bits.
- In 16-bit PPG mode, write the upper bits before the lower bits. When only the upper bits are written, the previously written value is reused in the next load. Writing data to PDSn0 also updates PDSn1 at the same time.
- PDSn1 and PDSn0 are initialized upon reset.
- To set the duty to 0%, select "0x00".
- To set the duty to 100%, set it to the same value as the 8/16-bit PPG timer n1/n0 cycle setup register (PPSn0, PPSn1).
- When the 8/16-bit PPG timer n0/n1 duty setup register (PDS) is set to a larger value than the setting value of the 8/16-bit PPG cycle setup buffer register (PPS), the PPG output becomes "L" output in the normal polarity (when the output level inversion bit of 8/16-bit PPG output inversion register is "0").
- If the duty settings are modified during operation, the modified value will be effective from the next PPG cycle.

19.7.5 8/16-bit PPG Start Register (PPGS)

The 8/16-bit PPG start register (PPGS) starts or stops the downcounter. The operation enable bit of each channel is assigned to the PPGS register, allowing simultaneous activation of the PPG channels.

Register Configuration

bit	7	6	5	4	3	2	1	0
Field	—	—	PEN21*	PEN20*	PEN11*	PEN10*	PEN01	PEN00
Attribute	—	—	R/W	R/W	R/W	R/W	R/W	R/W
Initial value	0	0	0	0	0	0	0	0

*: Since the number of channels of the 8/16-bit PPG varies among products, these bits may become undefined bits on certain products. For details, refer to the device data sheet.

Register Functions

[bit7:6] Undefined bits

Their read values are always "0". Writing values to these bits has no effect on operation.

[bit5] PEN21: PPG timer 21 (ch. 2) downcounter operation enable bit

This bit enables or stops the downcounter operation of PPG timer 21 (ch. 2).

bit5	Details
Writing "0"	Stops the downcounter operation of PPG timer 21 (ch. 2).
Writing "1"	Enables the downcounter operation of PPG timer 21 (ch. 2).

[bit4] PEN20: PPG timer 20 (ch. 2) downcounter operation enable bit

This bit enables or stops the downcounter operation of PPG timer 20 (ch. 2).

bit4	Details
Writing "0"	Stops the downcounter operation of PPG timer 20 (ch. 2).
Writing "1"	Enables the downcounter operation of PPG timer 20 (ch. 2).

[bit3] PEN11: PPG timer 11 (ch. 1) downcounter operation enable bit

This bit enables or stops the downcounter operation of PPG timer 11 (ch. 1).

bit3	Details
Writing "0"	Stops the downcounter operation of PPG timer 11 (ch. 1).
Writing "1"	Enables the downcounter operation of PPG timer 11 (ch. 1).

[bit2] PEN10: PPG timer 10 (ch. 1) downcounter operation enable bit

This bit enables or stops the downcounter operation of PPG timer 10 (ch. 1).

bit2	Details
Writing "0"	Stops the downcounter operation of PPG timer 10 (ch. 1).
Writing "1"	Enables the downcounter operation of PPG timer 10 (ch. 1).

[bit1] PEN01: PPG timer 01 (ch. 0) downcounter operation enable bit

This bit enables or stops the downcounter operation of PPG timer 01 (ch. 0).

bit1	Details
Writing "0"	Stops the downcounter operation of PPG timer 01 (ch. 0).
Writing "1"	Enables the downcounter operation of PPG timer 01 (ch. 0).

[bit0] PEN00: PPG timer 00 (ch. 0) downcounter operation enable bit

This bit enables or stops the downcounter operation of PPG timer 00 (ch. 0).

bit0	Details
Writing "0"	Stops the downcounter operation of PPG timer 00 (ch. 0).
Writing "1"	Enables the downcounter operation of PPG timer 00 (ch. 0).

19.7.6 8/16-bit PPG Output Reverse Register (REVC)

The 8/16-bit PPG output reverse register (REVC) reverses the PPG output including the initial level.

Register Configuration

bit	7	6	5	4	3	2	1	0
Field	—	—	REV21*	REV20*	REV11*	REV10*	REV01	REV00
Attribute	—	—	R/W	R/W	R/W	R/W	R/W	R/W
Initial value	0	0	0	0	0	0	0	0

*: Since the number of channels of the 8/16-bit PPG varies among products, these bits may become undefined bits on certain products. For details, refer to the device data sheet.

Register Functions

[bit7:6] Undefined bits

Their read values are always "0". Writing values to these bits has no effect on operation.

[bit5] REV21: PPG timer 21 (ch. 2) output level reverse bit

This bit selects the output level of PPG timer 21 (ch. 2).

bit5	Details
Writing "0"	Selects normal polarity.
Writing "1"	Selects reverse polarity.

[bit4] REV20: PPG timer 20 (ch. 2) output level reverse bit

This bit selects the output level of PPG timer 20 (ch. 2).

bit4	Details
Writing "0"	Selects normal polarity.
Writing "1"	Selects reverse polarity.

[bit3] REV11: PPG timer 11 (ch. 1) output level reverse bit

This bit selects the output level of PPG timer 11 (ch. 1).

bit3	Details
Writing "0"	Selects normal polarity.
Writing "1"	Selects reverse polarity.

[bit2] REV10: PPG timer 10 (ch. 1) output level reverse bit

This bit selects the output level of PPG timer 10 (ch. 1).

bit2	Details
Writing "0"	Selects normal polarity.
Writing "1"	Selects reverse polarity.

[bit1] REV01: PPG timer 01 (ch. 0) output level reverse bit

This bit selects the output level of PPG timer 01 (ch. 0).

bit1	Details
Writing "0"	Selects normal polarity.
Writing "1"	Selects reverse polarity.

[bit0] REV00: PPG timer 00 (ch. 0) output level reverse bit

This bit selects the output level of PPG timer 00 (ch. 0).

bit0	Details
Writing "0"	Selects normal polarity.
Writing "1"	Selects reverse polarity.

19.8 Notes on Using 8/16-bit PPG

This section provides notes on using the 8/16-bit PPG.

19.8.1 Notes on Using 8/16-bit PPG

- Note on operation

Depending on the timing between the activation of PPG and count clock, an error may occur in the first cycle of the PPG output immediately after the activation. The error varies depending on the count clock selected. The output, however, is performed properly in the succeeding cycles.

- Note on interrupts

A PPG interrupt is generated when the interrupt enable bit (PIE1/PIE0) is set to "1" and the interrupt request flag bit (PUF1/PUF0) in the 8/16-bit PPG timer n1/n0 control register (PCn1/PCn0) is also set to "1". Always clear the interrupt request flag bit (PUF1/PUF0) to "0" in the interrupt service routine.

20. 16-bit PPG Timer

This chapter describes the functions and operations of the 16-bit PPG timer.

20.1 Overview
20.2 Configuration
20.3 Channel
20.4 Pins
20.5 Interrupts
20.6 Operations and Setting Procedure Example
20.7 Registers
20.8 Notes on Using 16-bit PPG Timer

20.1 Overview

The 16-bit PPG timer can generate a PWM (Pulse Width Modulation) output or one-shot (square wave) output, and the period and duty of the output waveform can be changed by software freely. The timer can also generate an interrupt when a start trigger occurs or on the rising or falling edge of the output waveform.

20.1.1 16-bit PPG Timer

The 16-bit PPG timer can output the PWM output and the one shot. The output wave form can be reversed by setting the register (Normal polarity ↔ Inverted polarity).

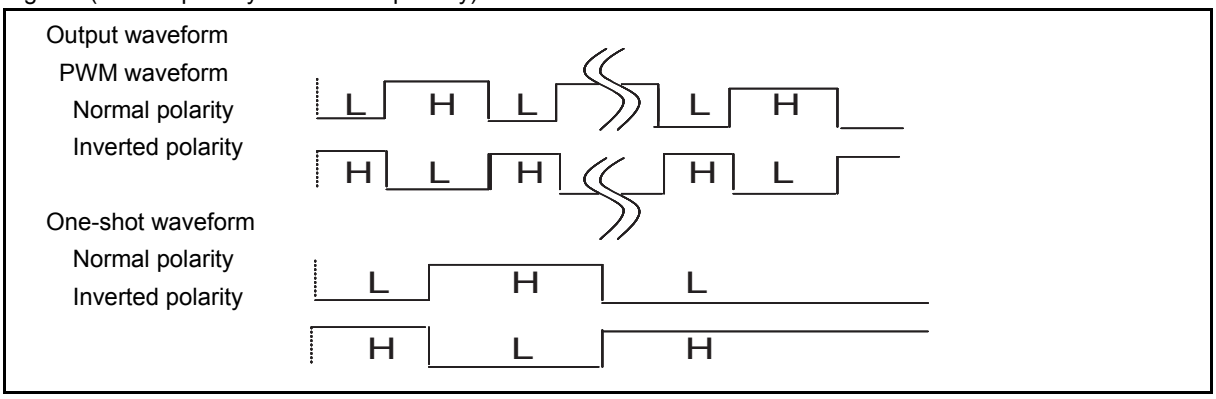

- The count operation clock can be selected from 12 different clock sources (MCLK, MCLK/2, MCLK/4, MCLK/8, MCLK/16, MCLK/32, $F_{CH}/2^7$, $F_{CH}/2^8$, $F_{CRH}/2^6$, $F_{CRH}/2^7$, $F_{MCRPLL}/2^6$ or $F_{MCRPLL}/2^7$). (MCLK: machine clock, F_{CH}: main clock, F_{CRH}: main CR clock, F_{MCRPLL}: main CR PLL clock)
- Interrupt can be selectively triggered by the following four conditions:
  - Occurrence of a start trigger in the PPG timer
  - Occurrence of a counter borrow in the 16-bit downcounter (cycle match).
  - Rising edge of PPG in normal polarity or falling edge of PPG in inverted polarity
  - Counter borrow, rising edge of PPG in normal polarity, or falling edge of PPG in inverted polarity

20.2 Configuration

This section describes the configuration of the 16-bit PPG timer.

The number of pins and that of channels of the 16-bit PPG vary among products. For details, refer to the device data sheet.

In this chapter, "n" represents the channel number. For details of pin names, register names and register abbreviations of a product, refer to the device data sheet.

20.2.1 Block Diagram of 16-bit PPG Timer

Figure 20-1. Block Diagram of 16-bit PPG Timer

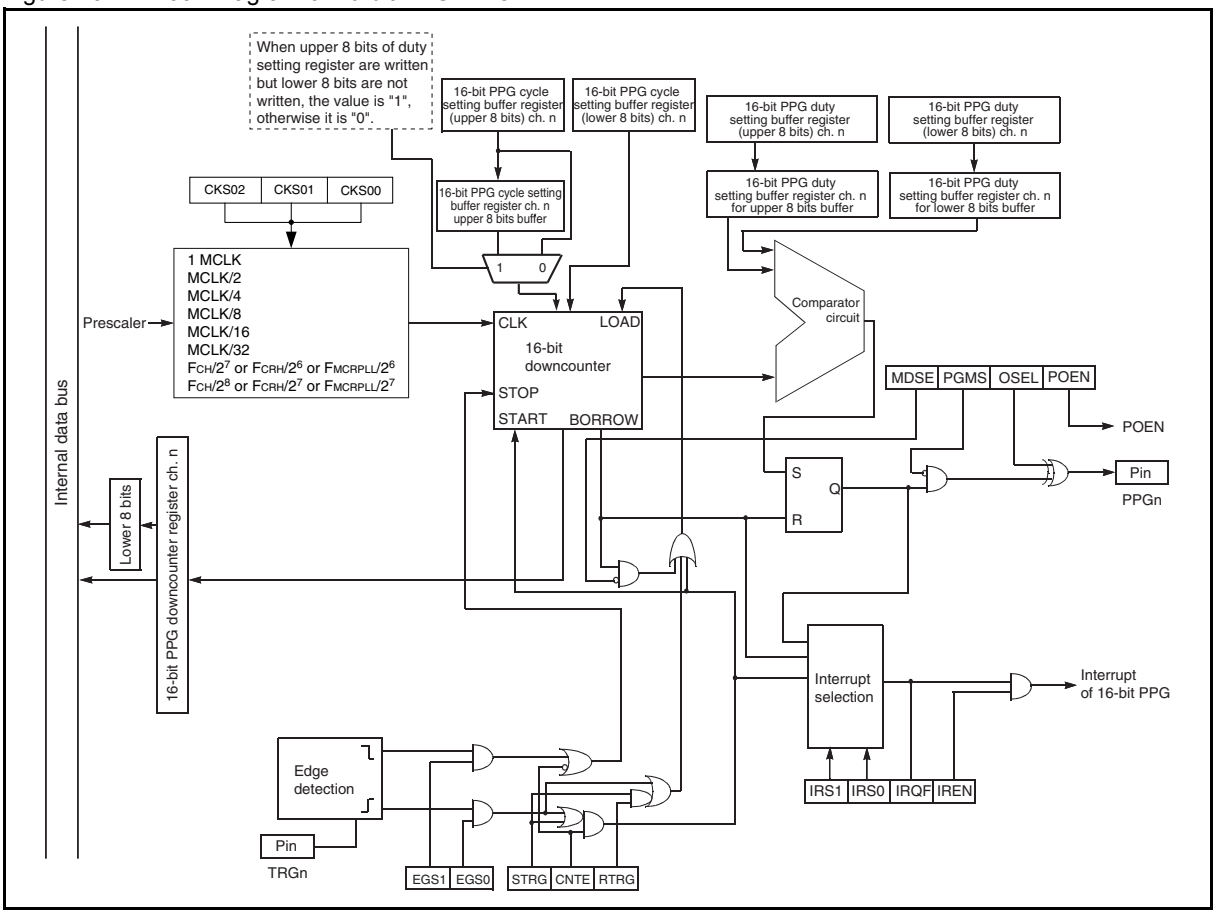

- Count clock selector

The clock for the countdown of 16-bit downcounter is selected from eight types of internal count clocks.

- 16 bit downcounter

It counts down with the count clock selected with the count clock selector.

- Comparator circuit

The output is kept "H" until the value of 16-bit downcounter is corresponding to the value of the 16-bit PPG duty setting buffer register from the value of 16-bit PPG cycle setting buffer register.

Afterwards, after keep "L" the output until the counter value is corresponding to "1", it keeps counting 16-bit downcounter from the value of 16-bit PPG cycle setting buffer register.

- 16-bit PPG downcounter register (upper/lower) ch. n (PDCRHn/PDCRLn)

The value of 16-bit downcounter of 16-bit PPG timer is read.

- 16-bit PPG cycle setting buffer register (upper/lower) ch. n (PCSRHn/PCSRLn)

The compare value for the cycle of 16-bit PPG timer is set.

- 16-bit PPG duty setting buffer register (upper/lower) ch. n (PDUTHn/PDUTLn)

The compare value for "H" width of 16-bit PPG timer is set.

- 16-bit PPG status control register (upper/lower) ch. n (PCNTHn/PCNTLn)

The operation mode and the operation condition of 16-bit PPG timer are set.

20.2.2 Input Clock

The 16-bit PPG timer uses the output clock from the prescaler as its input clock (count clock).

20.3 Channel

This section describes the channel of the 16-bit PPG timer.

20.3.1 Channel of 16-bit PPG Timer

Table 20-1 and Table 20-2 show the pins and registers on a channel of the 16-bit PPG timer respectively.

Table 20-1. Pins of 16-bit PPG Timer

Pin name	Pin function
PPGn	16-bit PPG timer PPGn output
TRGn	Trigger n input

Table 20-2. Registers of 16-bit PPG Timer

Register abbreviation	Corresponding register (Name in this manual)
PDCRHn	16-bit PPG downcounter register (upper) ch. n
PDCRLn	16-bit PPG downcounter register (lower) ch. n
PCSRHn	16-bit PPG cycle setting buffer register (upper) ch. n
PCSRLn	16-bit PPG cycle setting buffer register (lower) ch. n
PDUTHn	16-bit PPG duty setting buffer register (upper) ch. n
PDUTLn	16-bit PPG duty setting buffer register (lower) ch. n
PCNTHn	16-bit PPG status control register (upper) ch. n
PCNTLn	16-bit PPG status control register (lower) ch. n

20.4 Pins

This section describes the pins of the 16-bit PPG timer.

20.4.1 Pins of 16-bit PPG Timer

The pins of the 16-bit PPG timer are the PPGn pin and TRGn pin.

- PPGn pin

This pin serves as a general-purpose I/O port as well as a 16-bit PPG timer output.

PPGn:A PPG waveform is output to this pin. The PPG waveform can be output by using the 16-bit PPG status control register to enable output (PCNTLn:POEN=1).

- TRGn pin

TRGn:Used to start the 16-bit PPG timer by the hardware trigger.

20.5 Interrupts

The 16-bit PPG timer can generate interrupt requests in the following cases:

- When a trigger or counter borrow occurs
- When a rising edge of PPG is generated in normal polarity
- When a falling edge of PPG is generated in inverted polarity

The interrupt operation is controlled by the IRS[1:0] bits in the PCNTLn register.

20.5.1 Interrupts of 16-bit PPG Timer

Table 20-3 shows interrupt control bits and interrupt sources of the 16-bit PPG timer.

Table 20-3. Interrupt Control Bits and Interrupt Sources of 16-bit PPG Timer

Item	Description
Interrupt flag bit	PCNTLn:IRQF
Interrupt request enable bit	PCNTLn:IREN
Interrupt type select bits	PCNTLn:IRS[1:0]
Interrupt sources	PCNTLn:IRS[1:0] = 0b00 Hardware trigger by TRGn pin input of 16-bit downcounter, software trigger and retrigger
	PCNTLn:IRS[1:0] = 0b01 Counter borrow of 16-bit downcounter
	PCNTLn:IRS[1:0] = 0b10 Rising edge of PPGn output in normal polarity, or falling edge of PPGn output in inverted polarity
	PCNTLn:IRS[1:0] = 0b11 Counter borrow of 16-bit downcounter, rising edge of PPGn output in normal polarity, or falling edge of PPGn output in inverted polarity

When the IRQF bit in the 16-bit PPG status control register (PCNTLn) is set to "1" and interrupt requests are enabled (PCNTLn:IREN = 1) in the 16-bit PPG timer, an interrupt request is generated and output to the controller.

20.6 Operations and Setting Procedure Example

The 16-bit PPG timer can operate in PWM mode or one-shot mode. In addition, a retrigger function can be used in the 16-bit PPG timer.

20.6.1 PWM Mode (MDSE Bit in PCNTHn Register = 0)

In PWM mode, the 16-bit PPG cycle setting buffer register ch. n (PCSRHn, PCSRLn) values are loaded and the 16-bit downcounter starts down-count operation when a software trigger is input or a hardware trigger by TRGn pin input is input. When the count value reaches "1", the 16-bit PPG cycle setting buffer register ch. n (PCSRHn, PCSRLn) values are reloaded to repeat the down-count operation.

The initial state of the PPG output is "L". When the 16-bit downcounter value matches the value set in the duty setting registers, the output changes to "H" synchronizing with count clock. The output changes back to "L" when the "H" was output until the value of duty setting. (The output levels will be reversed if OSEL is set to "1".)

When the retrigger function is disabled (RTRG = 0), software triggers (STRG = 1) are ignored during the operation of the downcounter.

When the downcounter is not running, the maximum time between a valid trigger input occurring and the downcounter starting is as follows.

Software trigger:1 count clock cycle + 2 machine clock cycles

Hardware trigger by TRGn pin input:1 count clock cycle + 3 machine clock cycles

The minimum time is as follows.

Software trigger:2 machine clock cycles

Hardware trigger by TRGn pin input:3 machine clock cycles

When the downcounter is running, the maximum time between a valid retrigger input occurring and the downcounter restarting is as follows.

Software trigger:1 count clock cycle + 2 machine clock cycles

Hardware trigger by TRGn pin input:1 count clock cycle + 3 machine clock cycles

The minimum time is as follows.

Software trigger:2 machine clock cycles

Hardware trigger by TRGn pin input:3 machine clock cycles

- Invalidating the retrigger (RTRG bit in PCNTHn register = 0)

Figure 20-2. When Retrigger Is Invalid in PWM Mode

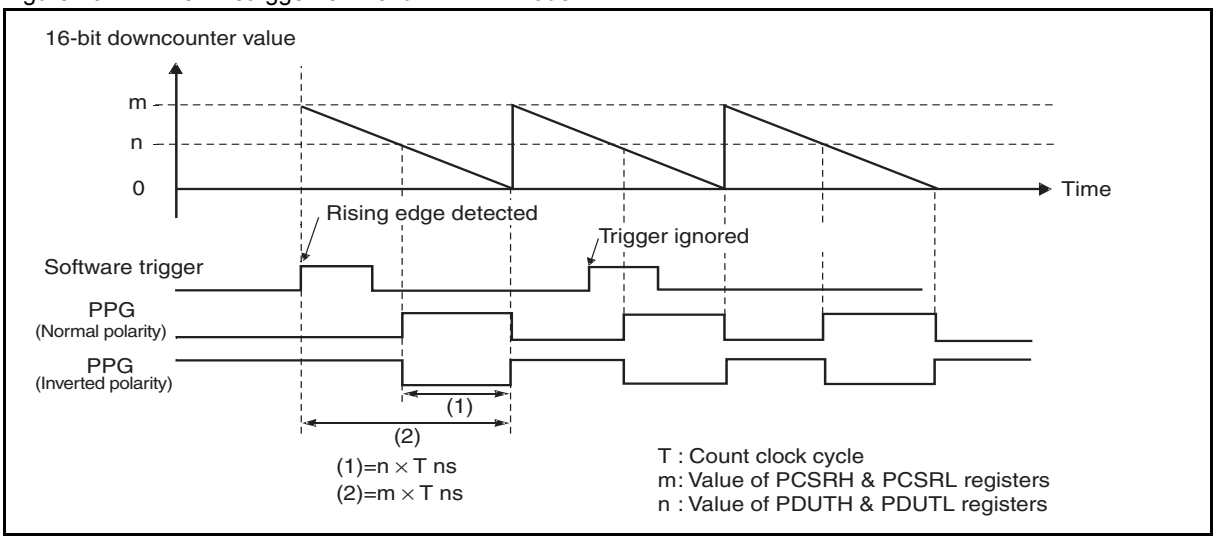

- Validating the retrigger (RTRG bit in PCNTHn register = 1)

Figure 20-3. When Retrigger Is Valid in PWM Mode

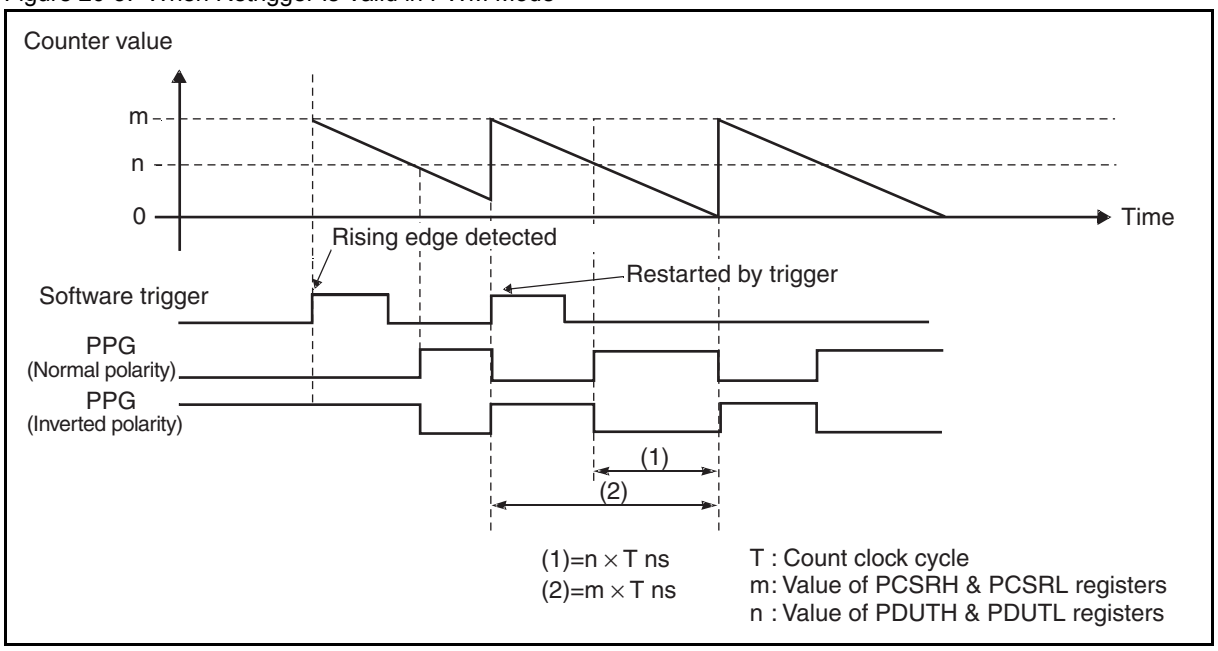

20.6.2 One-shot Mode (MDSE Bit in PCNTHn Register = 1)

One-shot operation mode can be used to output a single pulse with a specified width when a valid trigger input occurs. When retriggering is enabled and a valid trigger is detected during the counter operation, the downcounter value is reloaded.

The initial state of the PPGn output is "L". When the 16-bit downcounter value matches the value set in the duty setting registers, the output changes to "H". The output changes back to "L" when the counter reaches "1". (The output levels will be reversed if OSEL is set to "1".)

- Invalidating the retrigger (RTRG bit in PCNTHn register = 0)

Figure 20-4. When Retrigger Is Invalid in One-shot Mode

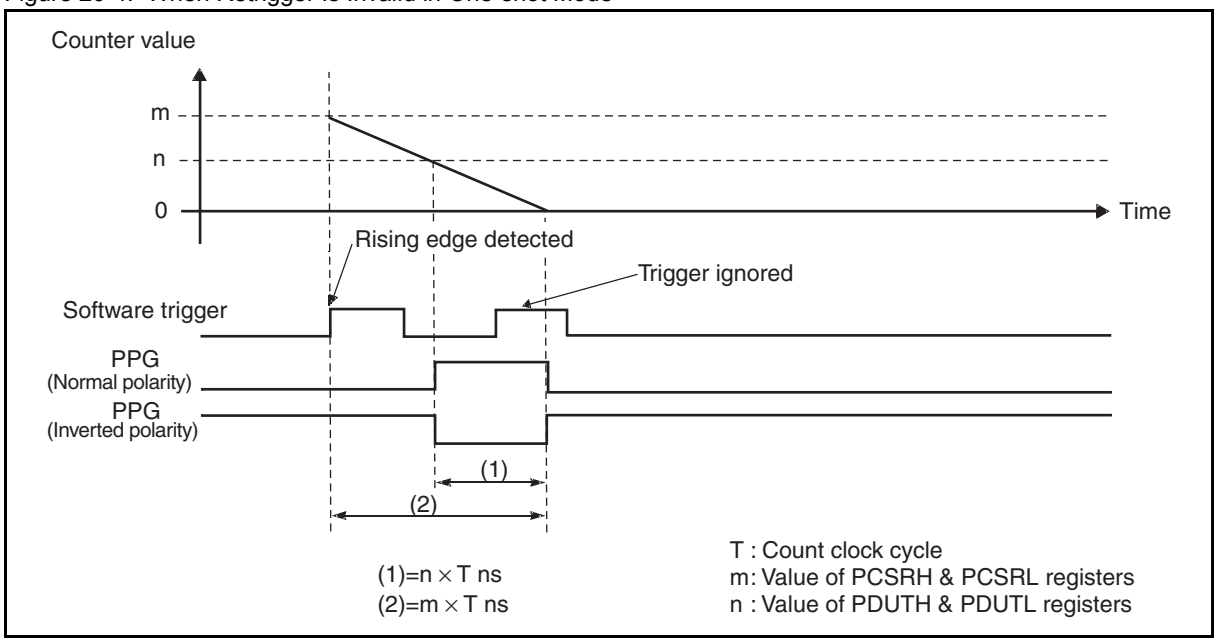

- Validating the retrigger (RTRG bit in PCNTHn register = 1)

Figure 20-5. When Retrigger Is Valid in One-shot Mode

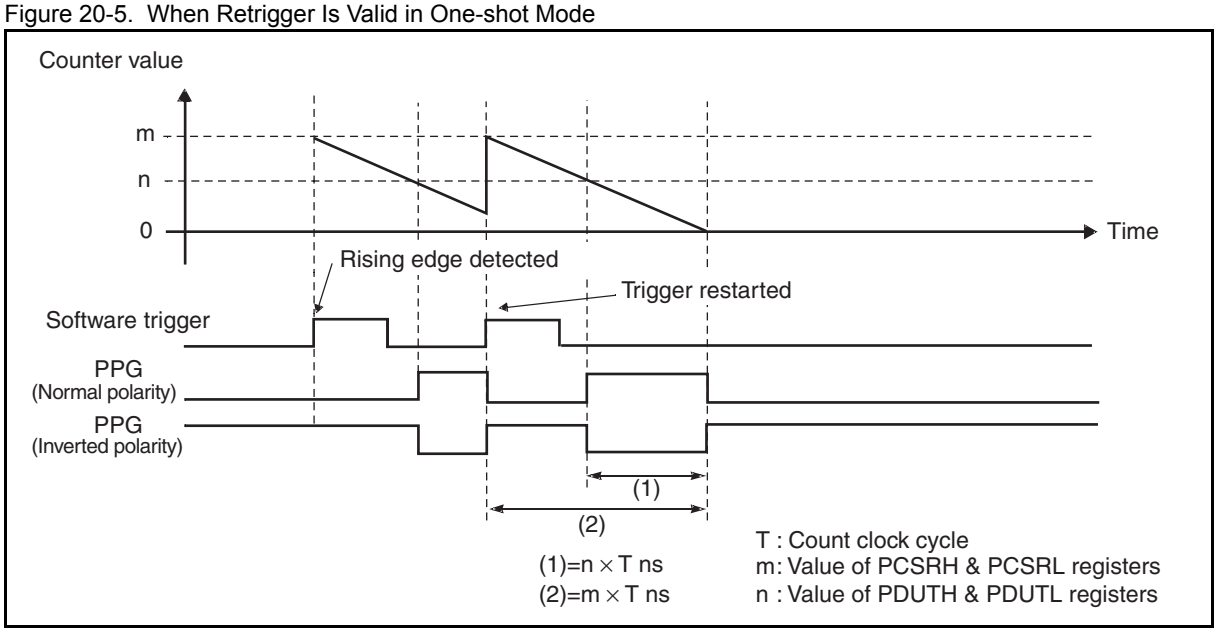

20.6.3 Hardware Trigger

"Hardware trigger" refers to PPG activation by signal input to the TRGn input pin. When EGS1 and EGS0 are set to "0b11" and the hardware trigger is used with TRGn input, PPG starts operation on a rising edge and halts the operation upon the detection of a falling edge.

Moreover, the PPG timer begins operation of the following rising edge from the beginning.

The operation can be retriggered by a valid TRGn input hardware trigger regardless of the retrigger setting of the RTRG bit when the TRGn input hardware trigger has been selected.

Figure 20-6. Hardware Trigger in PWM Mode

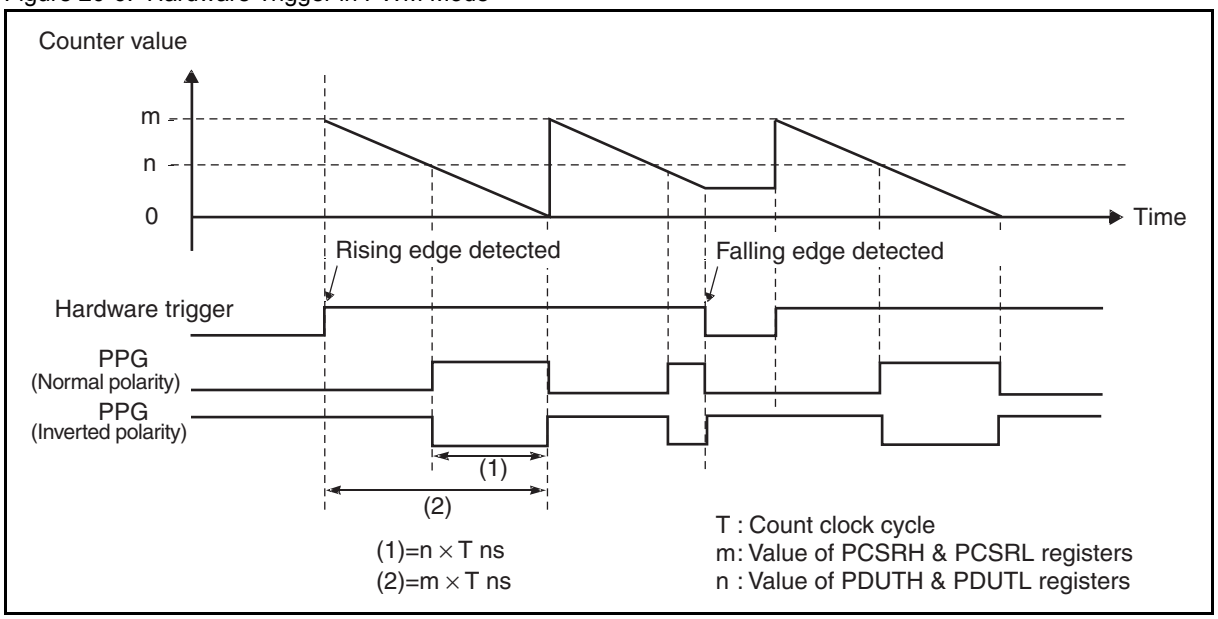

20.6.4 Setting Procedure Example

Below is an example of procedure for setting the 16-bit PPG timer.

■ Initial setup

1. Set the interrupt level. (ILR*)
2. Enable the hardware trigger and interrupts, select the interrupt type, and enable output. (PCNTLn)
3. Select the count clock and the mode, and enable timer operation. (PCNTHn)
4. Set the cycle. (PCSRHn, PCSRLn)
5. Set the duty. (PDUTHn, PDUTLn)
6. Start the PPG by the software trigger. (PCNTHn:STRG = 1)

*: For details of the interrupt level setting register (ILR), refer to Chapter 5.Interrupts in this hardware manual and "Interrupt Source Table" in the device data sheet.

■ Interrupt processing

1. Process any interrupt.
2. Clear the interrupt request flag. (PCNTLn:IRQF)

20.7 Registers

This section describes the registers of the 16-bit PPG timer.

Table 20-4. List of 16-bit PPG Timer Registers

Register abbreviation	Register name	Reference
PDCRHn	16-bit PPG downcounter register (upper) ch. n	20.7.1
PDCRLn	16-bit PPG downcounter register (lower) ch. n	20.7.1
PCSRHn	16-bit PPG cycle setting buffer register (upper) ch. n	20.7.2
PCSRLn	16-bit PPG cycle setting buffer register (lower) ch. n	20.7.2
PDUTHn	16-bit PPG duty setting buffer register (upper) ch. n	20.7.3
PDUTLn	16-bit PPG duty setting buffer register (lower) ch. n	20.7.3
PCNTHn	16-bit PPG status control register (upper) ch. n	20.7.4
PCNTLn	16-bit PPG status control register (lower) ch. n	20.7.5

20.7.1 16-bit PPG Downcounter Register (Upper/Lower) ch. n (PDCRHn/PDCRLn)

The 16-bit PPG downcounter register (upper) ch. n (PDCRHn) and the 16-bit PPG downcounter register (lower) ch. n (PDCRLn) form a 16-bit register that is used to read the count value from the 16-bit PPG downcounter.

Register Configuration

PDCRHn

bit	7	6	5	4	3	2	1	0
Field	DC15	DC14	DC13	DC12	DC11	DC10	DC09	DC08
Attribute	R	R	R	R	R	R	R	R
Initial value	0	0	0	0	0	0	0	0

PDCRLn

bit	7	6	5	4	3	2	1	0
Field	DC07	DC06	DC05	DC04	DC03	DC02	DC01	DC00
Attribute	R	R	R	R	R	R	R	R
Initial value	0	0	0	0	0	0	0	0

Register Functions

These registers form a 16-bit register that is used to read the count value from the 16-bit downcounter. The initial values of the register are all "0".

Always use one of the following procedures to read from this register.

- Use the "MOVW" instruction (use a 16-bit access instruction to read the PDCRHn register address).
- Use the "MOV" instruction and read PDCRHn first and then PDCRLn (reading PDCRHn automatically copies the lower 8 bits of the downcounter to PDCRLn).

This register is read-only and writing a value to this register has no effect on the operation.

Note:

If you use the "MOV" instruction and read PDCRLn before PDCRHn, PDCRLn returns the value from the previous valid read operation. Therefore, the value of the 16-bit downcounter cannot be read correctly.

20.7.2 16-bit PPG Cycle Setting Buffer Register (Upper/ Lower) ch. n (PCSRHn/PCSRLn)

The 16-bit PPG cycle setting buffer registers ch. n are used to set the cycle for the output pulses generated by the PPG.

Register Configuration

PCSRHn

bit	7	6	5	4	3	2	1	0
Field	CS15	CS14	CS13	CS12	CS11	CS10	CS09	CS08
Attribute	R/W	R/W	R/W	R/W	R/W	R/W	R/W	R/W
Initial value	1	1	1	1	1	1	1	1

PCSRLn

bit	7	6	5	4	3	2	1	0
Field	CS07	CS06	CS05	CS04	CS03	CS02	CS01	CS00
Attribute	R/W	R/W	R/W	R/W	R/W	R/W	R/W	R/W
Initial value	1	1	1	1	1	1	1	1

Register Functions

These registers form a 16-bit register which sets the period for the output pulses generated by the PPG. The values set in these registers are loaded to the downcounter.

When writing to these registers, always use one of the following procedures.

- Use the "MOVW" instruction (use a 16-bit access instruction to write to the PCSRHn register address).
- Use the "MOV" instruction and write to PCSRHn first and then PCSRLn.
  If a downcounter load occurs after writing data to PCSRHn (but before writing data to PCSRLn), the previous valid PCSRHn/PCSRLn value will be loaded to the downcounter. If the PCSRHn/PCSRLn value is modified during counting, the modified value will become effective from the next load of the downcounter.
- Do not set PCSRHn and PCSRLn to "0x00", or PCSRHn to "0x01" and PCSRLn to "0x01".

Note:

If the downcounter load occurs after the "MOV" instruction is used to write data to PCSRLn before PCSRHn, the previous valid PCSRHn value and newly written PCSRLn value are loaded to the downcounter. It should be noted that as a result, the correct period cannot be set.

20.7.3 16-bit PPG Duty Setting Buffer Register (Upper/Lower) ch. n (PDUTHn/PDUTLn)

The 16-bit PPG duty setting buffer registers ch. n control the duty ratio for the output pulses generated by the PPG.

Register Configuration

PDUTHn

bit	7	6	5	4	3	2	1	0
Field	DU15	DU14	DU13	DU12	DU11	DU10	DU09	DU08
Attribute	R/W	R/W	R/W	R/W	R/W	R/W	R/W	R/W
Initial value	1	1	1	1	1	1	1	1

PDUTLn

bit	7	6	5	4	3	2	1	0
Field	DU07	DU06	DU05	DU04	DU03	DU02	DU01	DU00
Attribute	R/W	R/W	R/W	R/W	R/W	R/W	R/W	R/W
Initial value	1	1	1	1	1	1	1	1

Register Functions

These registers form a 16-bit register which controls the duty ratio for the output pulses generated by the PPG. Transfer of the data from the 16-bit PPG duty setting buffer registers to the duty setting registers is performed at the same timing as the downcounter read.

When writing to these registers, always use one of the following procedures.

- Use the "MOVW" instruction (use a 16-bit access instruction to write to the PDUTHn register address).
- Use the "MOV" instruction and write to PDUTHn first and then PDUTLn.
  If a downcounter load occurs after writing data to PDUTHn (but before writing data to PDUTLn), the value of the 16-bit PPG duty setting buffer registers is not transferred to the duty setting registers.

The relations between the value of the 16-bit PPG duty setting registers and output pulse are explained below.

- When the same value is set in both the 16-bit PPG cycle setting buffer registers and duty setting registers, the "H" level will always be output if normal polarity is set, or the "L" level will always be output if inverted polarity is set.
- When the duty setting registers are set to "0x0000", the "L" level will always be output if normal polarity is set, or the "H" level will always be output if inverted polarity is set.
- When the value set in the duty setting registers is greater than the value in the 16-bit PPG cycle setting buffer registers, the "L" level will always be output if normal polarity is set, and the "H" level will always be output if inverted polarity is set.

20.7.4 16-bit PPG Status Control Register (Upper) ch. n (PCNTHn)

The 16-bit PPG status control register (upper) ch. n enables or disables the 16-bit PPG timer, and controls the software trigger, operating mode, operating clock and output mask.

Register Configuration

bit	7	6	5	4	3	2	1	0
Field	CNTE	STRG	MDSE	RTRG	CKS2	CKS1	CKS0	PGMS
Attribute	R/W	W	R/W	R/W	R/W	R/W	R/W	R/W
Initial value	0	0	0	0	0	0	0	0

Register Functions

[bit7] CNTE: Timer enable bit

This bit enables or stops the 16-bit PPG timer operation.

When "0" is written to this bit, the 16-bit PPG timer operation stops immediately and the PPGn output goes to the initial level ("L" output if OSEL is "0"; "H" output if OSEL is "1").

When "1" is written to this bit, the 16-bit PPG timer operation is enabled and the 16-bit PPG timer goes to standby to wait for a trigger.

bit7	Details
Writing "0"	Stops the 16-bit PPG timer operation.
Writing "1"	Enables the 16-bit PPG timer operation.

[bit6] STRG: Software trigger bit

This bit starts the 16-bit PPG timer by software.

With the CNTE bit set to "1", writing "1" to the STRG bit starts the 16-bit PPG timer.

bit6	Details
Read access	The read value is always "0".
Writing "0"	Has no effect on operation.
Writing "1"	Generates a software trigger.

[bit5] MDSE: Mode select bit

This bit selects the operating mode of the 16-bit PPG timer.

bit5	Details
Writing "0"	PWM mode
Writing "1"	One-shot mode

Note:

While the 16-bit PPG timer is in operation, modifying the setting of this bit is prohibited.

[bit4] RTRG: Software retrigger enable bit

This bit enables or disables using the software retrigger function while the 16-bit PPG timer is in operation.

bit4	Details
Writing "0"	Disables using the software retrigger function while the 16-bit PPG timer is in operation.
Writing "1"	Enables using the software retrigger function while the 16-bit PPG timer is in operation.

[bit3:1] CKS[2:0]: Operating clock select bits

These bits select the operating clock for the 16-bit PPG timer.

The operating clock is generated from the prescaler. For details, see 3.9 Operation of Prescaler.

bit3:1	Details (MCLK: machine clock, F_{CH}: main clock, F_{CRH}: main CR clock, F_{MCRPLL}: main CR PLL clock)
Writing "000"	1 MCLK
Writing "001"	MCLK/2
Writing "010"	MCLK/4
Writing "011"	MCLK/8
Writing "100"	MCLK/16
Writing "101"	MCLK/32
Writing "110"	$F_{CH}/2^7$ or $F_{CRH}/2^6$ or $F_{MCRPLL}/2^6$
Writing "111"	$F_{CH}/2^8$ or $F_{CRH}/2^7$ or $F_{MCRPLL}/2^7$

Note:

In subclock mode or sub-CR clock mode, since the time-base timer stops operating, setting CKS[2:0] to "0b110" or "0b111" is prohibited.

[bit0] PGMS: PPG output mask enable bit

This bit is used to mask the PPGn output to a specific level regardless of the mode setting (PCNTHn:MDSE), period setting (PCSRHn, PCSRLn), and duty setting (PDUTHn, PDUTLn).

Writing "0" to this bit disables the PPGn output mask function.

Writing "1" to this bit enables the PPGn output mask function. When the PPGn output polarity setting is set to "normal" (PCNTLn:OSEL = 0), the output is always masked to "L".

When the polarity setting is se to "inverted" (PCNTLn:OSEL = 1), the PPGn output is always masked to "H".

bit0	Details
Writing "0"	Disables the PPGn output mask function.
Writing "1"	Enables the PPGn output mask function.

20.7.5 16-bit PPG Status Control Register (Lower) ch. n (PCNTLn)

The 16-bit PPG status control register (lower) ch. n controls the hardware trigger, interrupt, output, and output polarity of the 16-bit PPG timer.

Register Configuration

bit	7	6	5	4	3	2	1	0
Field	EGS1	EGS0	IREN	IRQF	IRS1	IRS0	POEN	OSEL
Attribute	R/W	R/W	R/W	R/W	R/W	R/W	R/W	R/W
Initial value	0	0	0	0	0	0	0	0

Register Functions

[bit7] EGS1: Hardware trigger enable bit 1

This bit enables or disables stopping the operation of the 16-bit PPG timer at a falling edge of the TRGn input.

bit7	Details
Writing "0"	Disables stopping the operation of the 16-bit PPG timer at a falling edge of the TRGn input.
Writing "1"	Enables stopping the operation of the 16-bit PPG timer at a falling edge of the TRGn input.

[bit6] EGS0: Hardware trigger enable bit 0

This bit enables or disables starting the operation of the 16-bit PPG timer at a rising edge of the TRGn input.

bit6	Details
Writing "0"	Disables starting the operation of the 16-bit PPG timer at a rising edge of the TRGn input.
Writing "1"	Enables starting the operation of the 16-bit PPG timer at a rising edge of the TRGn input.

[bit5] IREN: PPG interrupt request enable bit

This bit enables or disables making the 16-bit PPG timer interrupt request to the interrupt controller.

bit5	Details
Writing "0"	Disables the 16-bit PPG timer interrupt request.
Writing "1"	Enables the 16-bit PPG timer interrupt request.

[bit4] IRQF: PPG interrupt flag bit

This bit is set to "1" when the 16-bit PPG timer interrupt is generated.

When read by the read-modify-write (RMW) type of instruction, this bit always returns "1".

bit4	Details
Reading "0"	Indicates that no 16-bit PPG timer interrupt has been generated.
Reading "1"	Indicates that a 16-bit PPG timer interrupt has been generated.
Writing "0"	Clears this bit.
Writing "1"	Has no effect on operation.

[bit3:2] IRS[1:0]: Interrupt type select bit

These bits select the interrupt source type for the 16-bit PPG timer.

bit3:2	Details
Writing "00"	Trigger by input, software trigger, or retrigger
Writing "01"	Counter borrow
Writing "10"	Rising edge of 16-bit PPG timer output in normal polarity, or falling edge of 16-bit PPG timer output in inverted polarity
Writing "11"	Counter borrow, rising edge of 16-bit PPG timer output in normal polarity, or falling edge of 16-bit PPG timer output in inverted polarity

[bit1] POEN: Output enable bit

This bit enables or disables the 16-bit PPG timer output pin output.

bit1	Details
Writing "0"	The 16-bit PPG timer output pin functions as a general-purpose I/O port.
Writing "1"	The 16-bit PPG timer output pin functions as an output pin for the 16-bit PPG timer.

[bit0] OSEL: Output inversion bit

This bit selects the polarity of the 16-bit PPG timer output pin.

When "0" is written to this bit, the PPG output goes to "H" when "L" is output in the internal start and the 16-bit downcounter value matches the duty setting register value, and goes to "L" when a downcounter borrow occurs (normal polarity).

When "1" is written to this bit, the 16-bit PPG timer output is inverted (inverted polarity).

bit0	Details
Writing "0"	Normal polarity
Writing "1"	Inverted polarity

20.8 Notes on Using 16-bit PPG Timer

This section provides notes on using the 16-bit PPG timer.

20.8.1 Notes on Using 16-bit PPG Timer

- Notes on setting the program

Do not use the retrigger if the same values are set for the cycle and duty. If used, the PPG output will go to the "L" level for one count clock cycle after the retrigger, and then go back to the "H" level when normal polarity has been selected.

If the microcontroller enters a standby mode, the TRGn pin setting may change and cause the device to malfunction. Therefore, disable the timer enable bit (PCNTHn:CNTE = 0) or disable the hardware trigger enable bit (PCNTLn:EGS1 = 0, EGS0 = 0).

When the cycle and duty are set to the same value, an interrupt is generated only once by duty match. Moreover, if the duty is set to a value greater than the value of the period, no interrupt will be generated by a duty match.

While the 16-bit timer is counting, and the software retrigger function is enabled (PCNTHn:RTRG = 1) and the retrigger is selected an interrupt source (PCNTLn:IRS[1:0] = 0b00), never disable the 16-bit PPG timer operation (PCNTHn:CNTE = 0) and enable the software trigger (PCNTHn:STRG = 1) at the same time. Otherwise, even though the 16-bit PPG timer stops operating, the interrupt flag bit may be set by a retrigger.

21. 16-bit Reload Timer

This chapter describes the functions and operations of the 16-bit reload timer.

21.1 Overview
21.2 Configuration
21.3 Channel
21.4 Pins
21.5 Interrupt
21.6 Operations and Setting Procedure Example
21.7 Registers
21.8 Notes on Using 16-bit Reload Timer

21.1 Overview

The 16-bit reload timer has two counter operating modes in each of the two clock modes.

The 16-bit reload timer can be used as an interval timer by generating an interrupt when an underflow occurs in the timer.

21.1.1 Operation Modes of 16-bit Reload Timer

Table 21-1. shows the operation modes of the 16-bit reload timer.

Table 21-1. Operation Modes of 16-bit Reload Timer

Clock mode	Counter operating mode	Trigger operation mode
Internal clock mode	Reload mode	Software trigger operation External trigger input operation External gate input operation
	One-shot mode	
Event count mode (external clock mode)	Reload mode	Software trigger operation
	One-shot mode	

21.1.2 Internal Clock Mode

Internal clock mode is selected when any value other than "0b111" is set to the count clock setting bits (CSL[2:0]) in the 16-bit reload timer control status register (upper) ch. n (TMCSRHn).

In internal clock mode, the following three trigger operation modes are available.

- Software trigger operation

With the count enable bit (CNTE) in the 16-bit reload timer control status register (lower) ch. n (TMCSRLn) set to "1", the counter starts when the software trigger bit (TRG) in the TMCSRLn register is set to "1".

- External trigger input operation

When the count enable bit (CNTE) in the 16-bit reload timer control status register (lower) ch. n (TMCSRLn) is set to "1", the count will start if a valid edge (rising, falling, or both selectable) specified by the operating mode select bits (MOD[2:0]) is input to the TIn pin.

- External gate input operation

When the count enable bit (CNTE) in the 16-bit reload timer control status register (lower) ch. n (TMCSRLn) is set to "1", the count will start if a valid trigger input level ("L" or "H" selectable) specified by the operating mode select bits (MOD[2:0]) is input to the TIn pin.

21.1.3 Event Count Mode (External Clock Mode)

When the count clock setting bits (CSL[2:0]) in the 16-bit reload timer control status register (upper) ch. n (TMCSRHn) are set to "0b111", the count will start if a valid edge of trigger input (rising, falling, or both) specified by the operating mode select bits (MOD[2:0]) is input to the TIn pin. When an external clock is input in regular cycles, the reload timer can also be used as an interval timer.

21.1.4 Counter Operating Mode

- Reload mode

When an underflow occurs in the 16-bit downcounter ("0x0000" $\rightarrow$ "0xFFFF"), the value of the 16-bit reload timer reload register ch. n (TMRLRHn/TMRLRLn) is loaded to the 16-bit downcounter and the 16-bit reload timer continues counting. In addition, since the interrupt request is output by an underflow, the 16-bit reload timer can be used as the interval timer.

- One-shot mode

An interrupt is generated when an underflow occurs on the 16-bit downcounter.

During counter operation, the TOn pin outputs a square waveform indicating that the counter is currently running.

21.2 Configuration

The 16-bit reload timer consists of the following blocks:

- Count clock generation circuit
- Reload control circuit
- Output control circuit
- Operation control circuit
- 16-bit reload timer timer register ch. n (TMRHn, TMRLn)
- 16-bit reload timer reload register ch. n (TMRLRHn, TMRLRLn)
- 16-bit reload timer control status register ch. n (TMCSRHn, TMCSRLn)

The number of pins and that of channels of the 16-bit reload timer vary among products. For details, refer to the device data sheet.

In this chapter, "n" in a pin name and a register abbreviation represents the channel number. For details of pin names, register names and register abbreviations of a product, refer to the device data sheet.

21.2.1 Block Diagram of 16-bit Reload Timer

Figure 21-1 shows the block diagram of the 16-bit reload timer.

Figure 21-1. Block Diagram of 16-bit Reload Timer

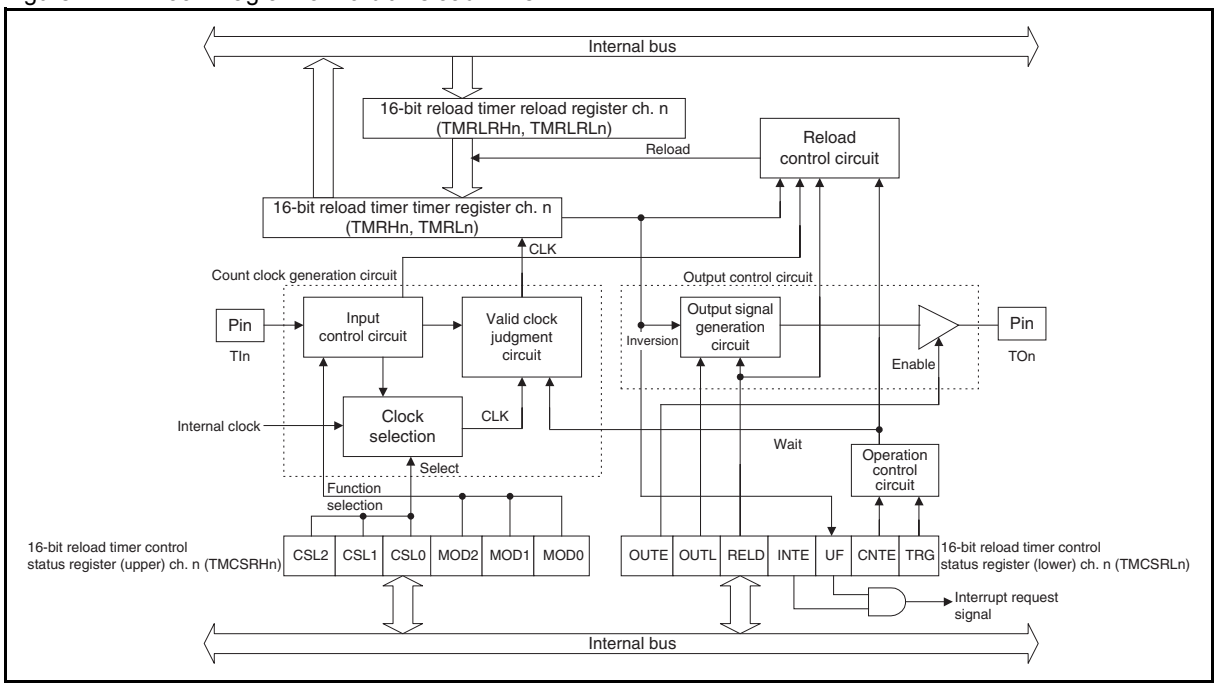

- Count clock generation circuit

The count clock for the 16-bit reload timer is generated from the internal clock or TIn pin input signal.

- Reload control circuit

This circuit controls reload operation when the timer is started or an underflow occurs.

- Output control circuit

This circuit controls the inversion of TOn pin output by an underflow of the 16-bit downcounter and the enabling and disabling of TOn pin output.

- Operation control circuit

This circuit controls the starting and stopping of the 16-bit downcounter.

- 16-bit reload timer timer register (upper/lower) ch. n (TMRHn/TMRLn)

TMRHn and TMRLn form a 16-bit downcounter. Reading these registers returns the current count value.

- 16-bit reload timer reload register (upper/lower) ch. n (TMRLRHn/TMRLRLn)

This register sets the load value to the 16-bit downcounter. The register loads the setting value of the 16-bit reload timer reload register to the 16-bit downcounter to down count.

- 16-bit reload timer control status register (upper/lower) ch. n (TMCSRHn/TMCSRLn)

This register controls the count clock, operating mode, clock selection, interrupts, and other aspects of the 16-bit reload timer as well as indicates the current operation status.

21.2.2 Input Clock

The 16-bit reload timer uses the output clock from the prescaler or the input signal from the TIn pin as its input clock (count clock).

21.3 Channel

This section describes the channel of the 16-bit reload timer.

21.3.1 Channel of 16-bit Reload Timer

Table 21-2 and Table 21-3 show the pins and registers on a channel of the 16-bit reload timer respectively.

Table 21-2. Pins of 16-bit Reload Timer

Pin name	Pin function
TOn	Timer output
TIn	Timer input

Table 21-3. Registers of 16-bit Reload Timer

Register abbreviation	Corresponding register (Name in this manual)
TMCSRHn	16-bit reload timer control status register (upper) ch. n
TMCSRLn	16-bit reload timer control status register (lower) ch. n
TMRHn	16-bit reload timer timer register (upper) ch. n
TMRLn	16-bit reload timer timer register (lower) ch. n
TMRLRHn	16-bit reload timer reload register (upper) ch. n
TMRLRLn	16-bit reload timer reload register (lower) ch. n

21.4 Pins

This section describes the pins of the 16-bit reload timer and shows the block diagram of these pins.

21.4.1 Pins of 16-bit Reload Timer

The pins of the 16-bit reload timer are namely the TIn and TOn pins.

- TIn pin

This pin is used both as a general-purpose I/O port and as the external pulse input pin for the counter (TIn).

TIn:Any pulse edge input to this pin is counted during counter operation. To use it as the external pulse input pin in counter operation, set the corresponding bit in the port direction register (DDR) to "0".

- TOn pin

This pin is used both as a general-purpose I/O port and as the output pin of the 16-bit reload timer (TOn).

TOn:This pin outputs waveforms of the 16-bit reload timer.

When this pin is used as the 16-bit reload timer output pin, regardless of the setting of the port direction register (DDR), enabling 16-bit reload timer output (TMCSRLn:OUTE = 1) automatically makes this pin function as the 16-bit reload timer output pin to output the waveforms.

21.5 Interrupt

The 16-bit reload timer outputs an interrupt request when an underflow occurs on the 16-bit downcounter.

21.5.1 Interrupt of 16-bit Reload Timer

Table 21-4 shows the interrupt control bit and interrupt source of the 16-bit reload timer.

Table 21-4. Interrupt Control Bits and Interrupt Sources of 16-bit Reload Timer

Item	Description
Interrupt request flag bit	UF bit in TMCSRLn register
Interrupt request enable bit	INTE bit in TMCSRLn register
Interrupt source	Underflow of downcounter (TMRHn/TMRLn)

The 16-bit reload timer sets the underflow interrupt request flag bit (UF) in the 16-bit reload timer control status register (lower) ch. n (TMCSRLn) to "1" when an underflow occurs in the 16-bit downcounter ("0x0000" → "0xFFFF"). If the underflow interrupt request has been enabled (TMCSRLn:INTE = 1), the interrupt request will be output to the interrupt controller.

21.6 Operations and Setting Procedure Example

This section describes the operating status of the 16-bit reload timer counter.

Operating Status of Counter

The counter status is determined by the value of the count enable bit (CNTE) in the 16-bit reload timer control status register (lower) ch. n (TMCSRLn) and the internal signal start trigger wait signal (WAIT). The STOP state (halted), WAIT state (waiting for a start trigger) and RUN state (operating state) can be set.

Figure 21-2 shows the status transition of these counters.

Figure 21-2. Diagram of Counter State Transition

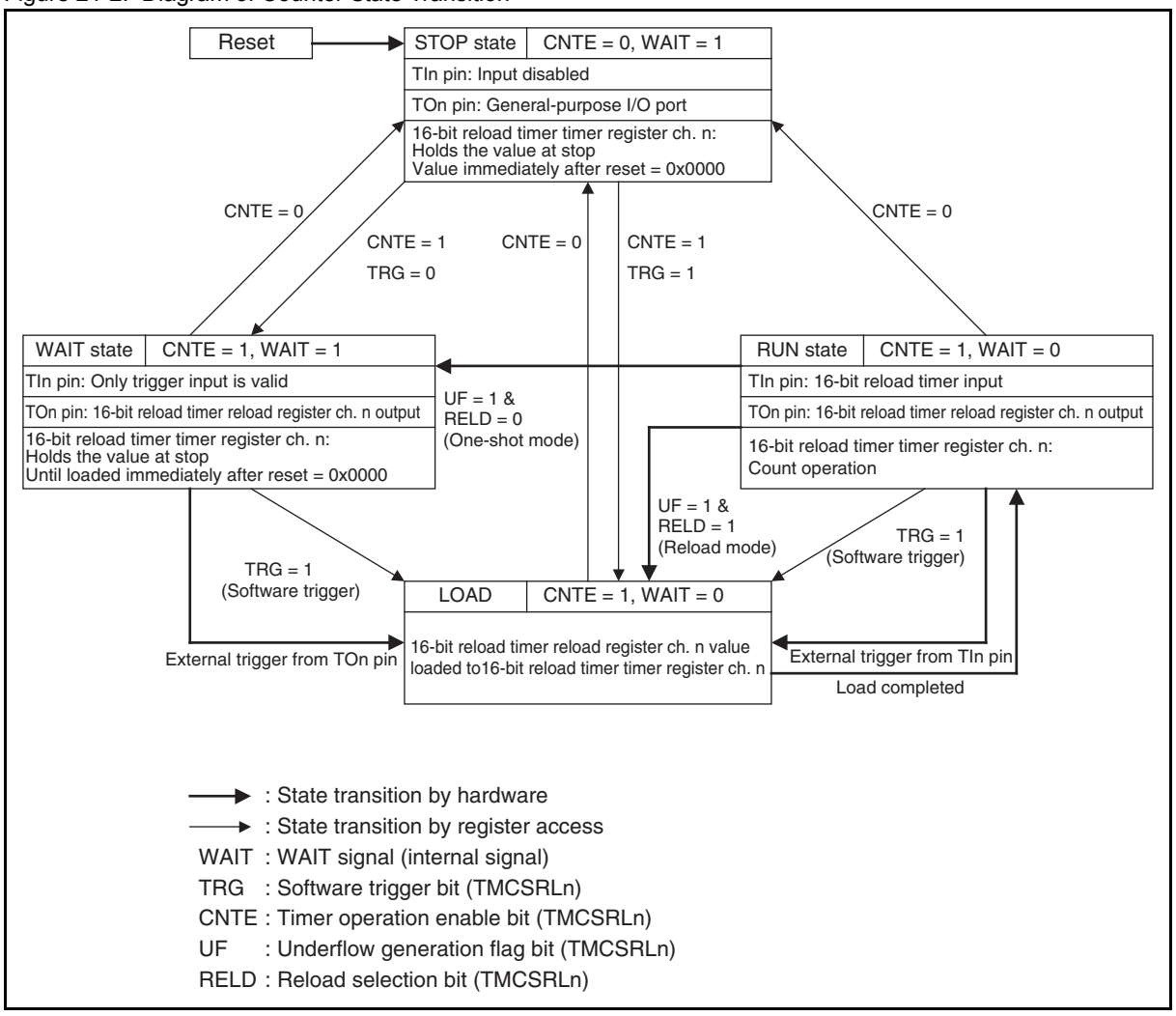

Setting Procedure Example

Below is an example of procedure for setting the 16-bit reload timer.

- Initial setup

1. Set the interrupt level. (ILR*)
2. Set the reload value. (TMRHn/TMRLn)
3. Select the clock. (TMCSRHn:CSL[2:0])
4. Select the operating mode. (TMCSRHn:MOD[2:0])
5. Enable the output. (TMCSRLn:OUTE = 1)
6. Select the output level. (TMCSRLn:OUTL)
7. Select reload. (TMCSRLn:RELD)
8. Enable a count. (TMCSRLn:CNTE = 1)
9. Perform the software trigger. (TMCSRLn:TRG = 1)
10. Enable underflow interrupt. (TMCSRLn:INTE = 1).

*:For details of the interrupt level setting register (ILR), refer to Chapter 5.Interrupts in this hardware manual and "Interrupt Source Table" in the device data sheet.

- Interrupt processing

1. Clear the underflow interrupt request flag. (TMCSRLn:UF=0)
2. Disable underflow interrupt. (TMCSRLn:INTE = 0)
3. Process any interrupt.
4. Enable underflow interrupt. (TMCSRLn:INTE = 1)

21.6.1 Internal Clock Mode

In this mode, the 16-bit downcounter counts down while being synchronized with the internal count clock, and outputs an interrupt request to the interrupt controller every time an underflow occurs ("0x0000" → "0xFFFF"). In addition, the TOn pin can output the toggle waveform.

21.6.1.1 Setting Internal Clock Mode

The timer requires the register settings shown in Figure 21-3 to operate as an interval timer.

Figure 21-3. Internal Clock Mode Setup

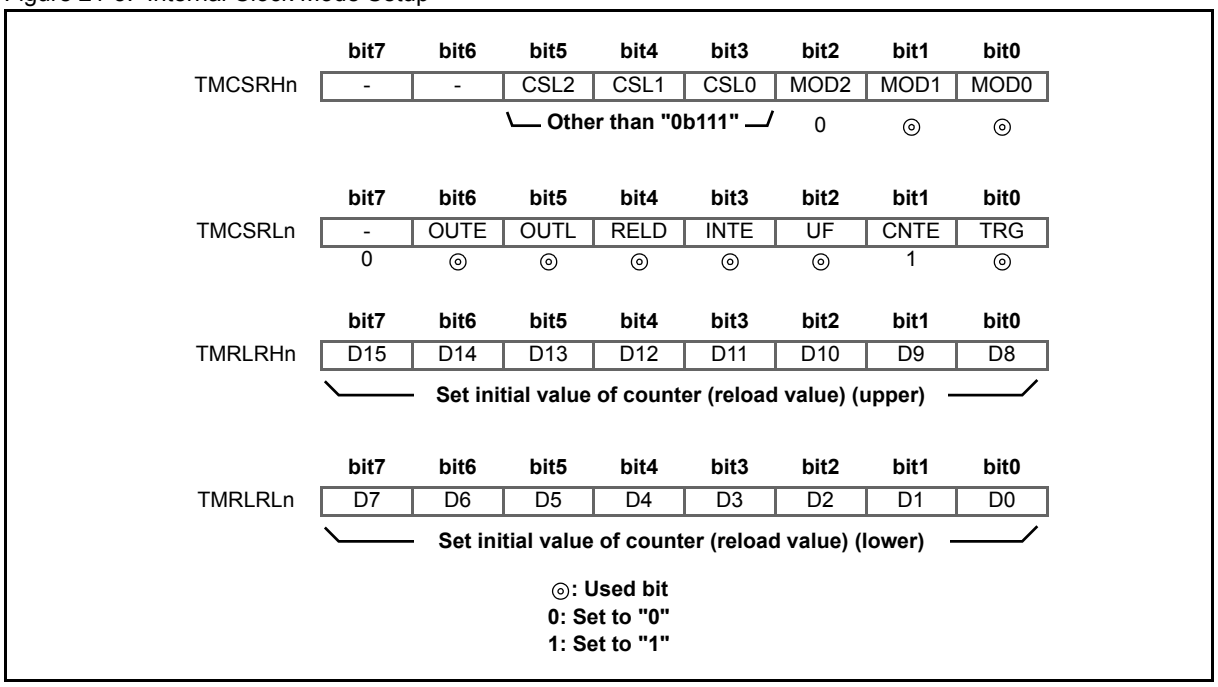

21.6.1.2 Operation of Internal Clock Mode (Reload Mode)

When "1" is set to the count enable bit (CNTE) to enable counting, and the timer is started by setting "1" to the software trigger bit (TRG) or by an external trigger, the value set in the 16-bit reload timer reload register (upper/lower) ch. n (TMRLRHn/TMRLRLn) is reloaded to the 16-bit downcounter and downcounting starts. If counting is enabled when the count enable bit (CNTE) and software trigger bit (TRG) are set to "1" at the same time, the counting starts at the same time.

If the reload select bit (RELD) is "1", the value of the 16-bit reload timer reload register (upper/lower) ch. n (TMRLRHn/TMRLRLn) is reloaded to the 16-bit downcounter and the count continues when the 16-bit counter underflows ("0x0000" → "0xFFFF"). If the underflow interrupt request flag bit (UF) is "1" when the underflow interrupt request enable bit (INTE) is set to "1", an interrupt request is output.

The TOn pin can output a toggle waveform that is inverted every time an underflow occurs.

■ Software trigger operation

When the count enable bit (CNTE) is set to "1", setting "1" to the software trigger bit (TRG) starts counting.

Figure 21-4 shows the software trigger operation in reload mode.

Figure 21-4. Count Operation in Reload Mode (Software Trigger Operation)

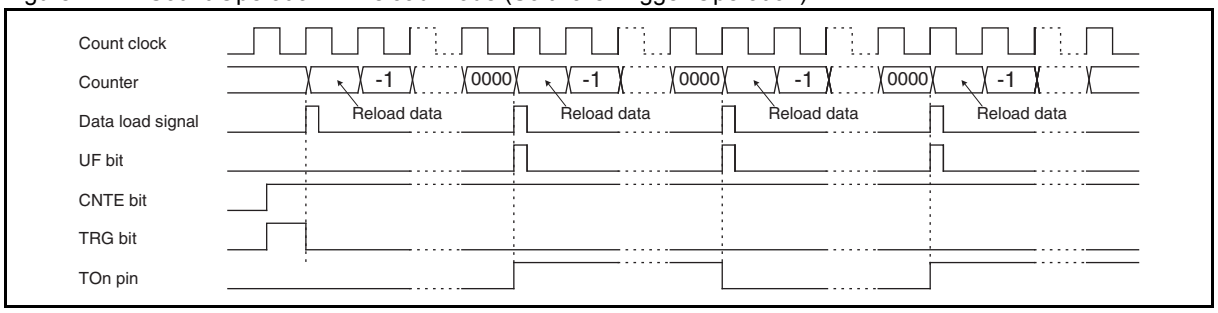

■ External trigger input operation

The count starts when the count enable bit (CNTE) is set to "1" and a valid edge of trigger input (rising, falling, or both selectable) set by the operating mode select bits (MOD[2:0]) is input to the TIn pin.

The timer start with the software trigger becomes effective as well as the one with an external trigger.

Figure 21-5 shows the external trigger input operation in reload mode.

Figure 21-5. Count Operation in Reload Mode (External Trigger Input Operation)

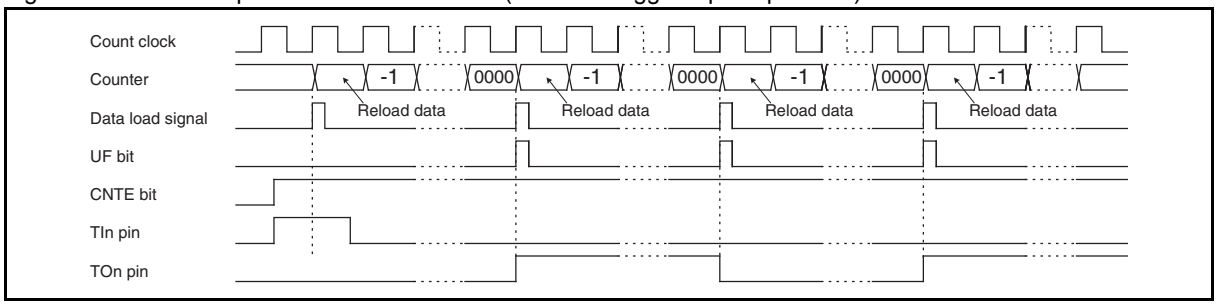

■ Gate input operation

The count starts when the count enable bit (CNTE) is set to "1" and the software trigger bit (TRG) is also set to "1".

The timer continues counting while the valid gate input level ("L" or "H" selectable) set by the operating mode select bits (MOD[2:0]) is being input to the TIn pin.

The timer start with the software trigger becomes effective as well as the one with an external trigger.

shows the gate input operation in reload mode.

Figure 21-6. Figure 21-6Count Operation in Reload Mode (External Gate Input Operation)

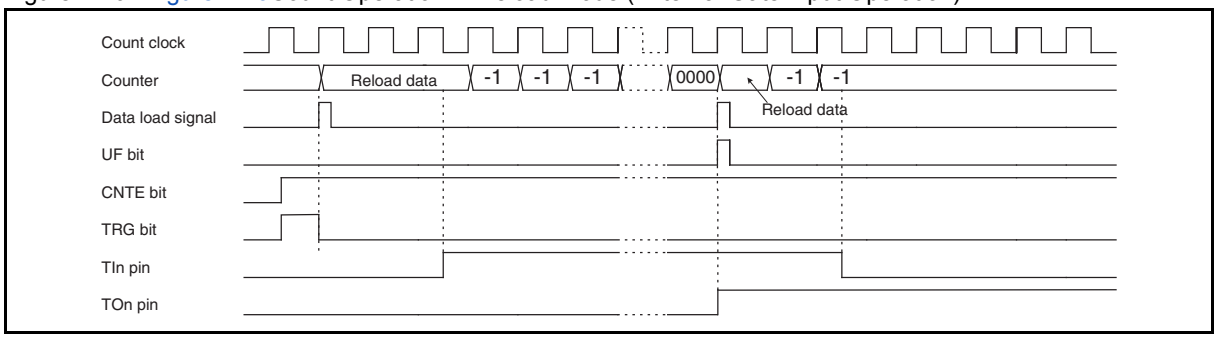

21.6.1.3 Operation of Internal Clock Mode (One-shot Mode)

When the count enable bit (CNTE) is set to "1" and the software trigger bit (TRG) is set to "1" or the valid edge (rising, falling or both edges selectable) specified by the operating mode select bits (MOD[2:0]) is input to the TIn pin, the value set in the 16-bit reload timer reload register is reloaded to the 16-bit downcounter and down-counting starts. When the count enable bit (CNTE) and software trigger bit (TRG) are set to "1" at the same time and then counting is enabled, the count is started simultaneously.

If the reload select bit (RELD) is "0", the 16-bit counter halts at "0xFFFF" when the 16-bit counter underflows ("0x0000" → "0xFFFF"). In this case, the underflow interrupt request flag bit (UF) is set to "1" and if the underflow interrupt request enable bit (INTE) is "1", an interrupt request is output.

A square waveform can be output from the TOn pin to indicate that the count is in progress.

- Software trigger operation

The count starts when the count enable bit (CNTE) is "1" and the software trigger bit (TRG) is set to "1".

Figure 21-7 shows the software trigger operation in one-shot mode.

Figure 21-7. Count Operation in One-shot Mode (Software Trigger Operation)

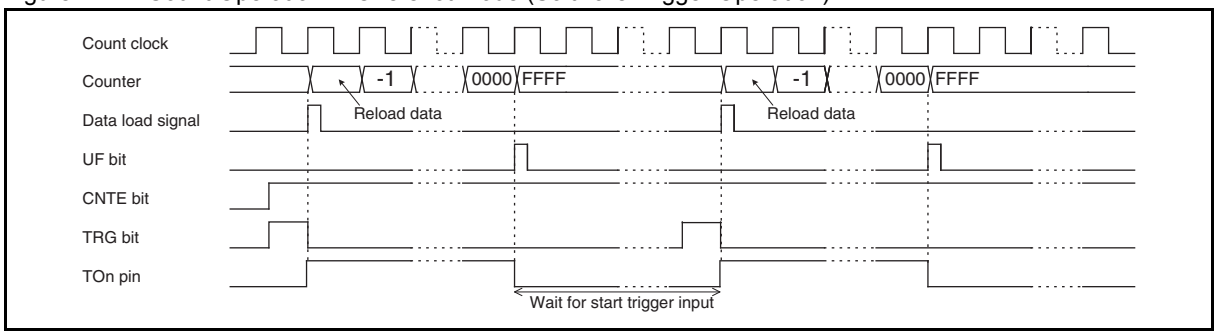

- External trigger input

The count starts when the count enable bit (CNTE) is "1" and the valid edge of trigger input (rising, falling, or both edges) specified by the operating mode select bits (MOD[2:0]) is input to the TIn pin.

Figure 21-8 shows the external trigger input operation in one-shot mode.

Figure 21-8. Count Operation in One-shot Mode (External Trigger Input Operation)

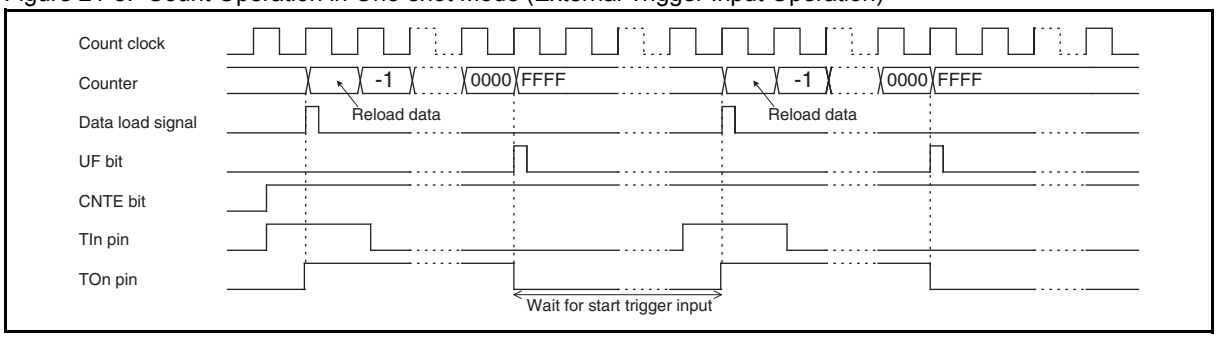

- Gate input operation

The count starts when the count enable bit (CNTE) is "1" and the software trigger bit (TRG) is also set to "1".

The timer continues counting as long as the trigger input enable level ("L" or "H" selectable) specified by the operating mode select bits (MOD[2:0]) is input to the TIn pin.

Figure 21-9 shows the external gate input operation in one-shot mode.

Figure 21-9. Count Operation in One-shot Mode (External Gate Input Operation)

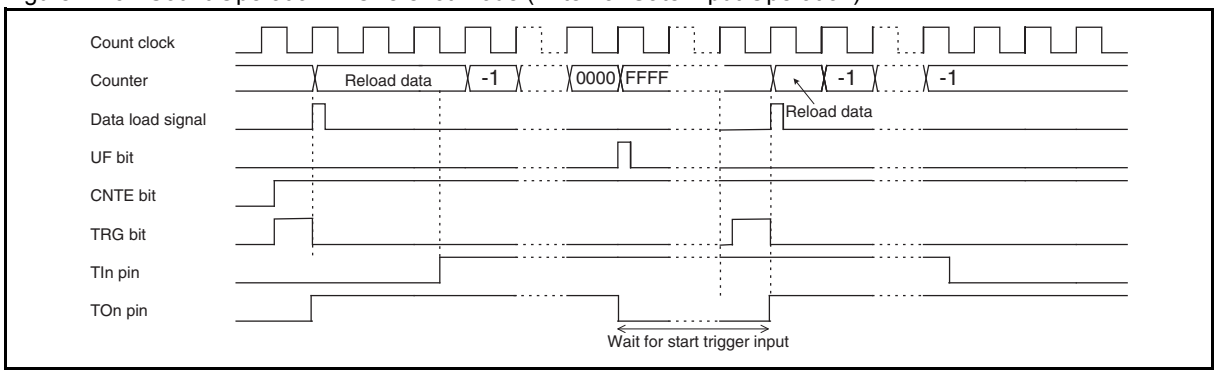

21.6.2 Event Count Mode

In this mode, the 16-bit downcounter counts down each time the valid edge is detected on the pulses input to the TIn pin, and an interrupt request is output to the interrupt controller when an underflow occurs ("0x0000" → "0xFFFF"). In addition, a toggle waveform or square waveform can be output from the TOn pin.

21.6.2.1 Event Count Mode Setup

The timer requires the register settings shown in Figure 21-10 to operate as an event counter.

Figure 21-10. Event Count Mode Setup

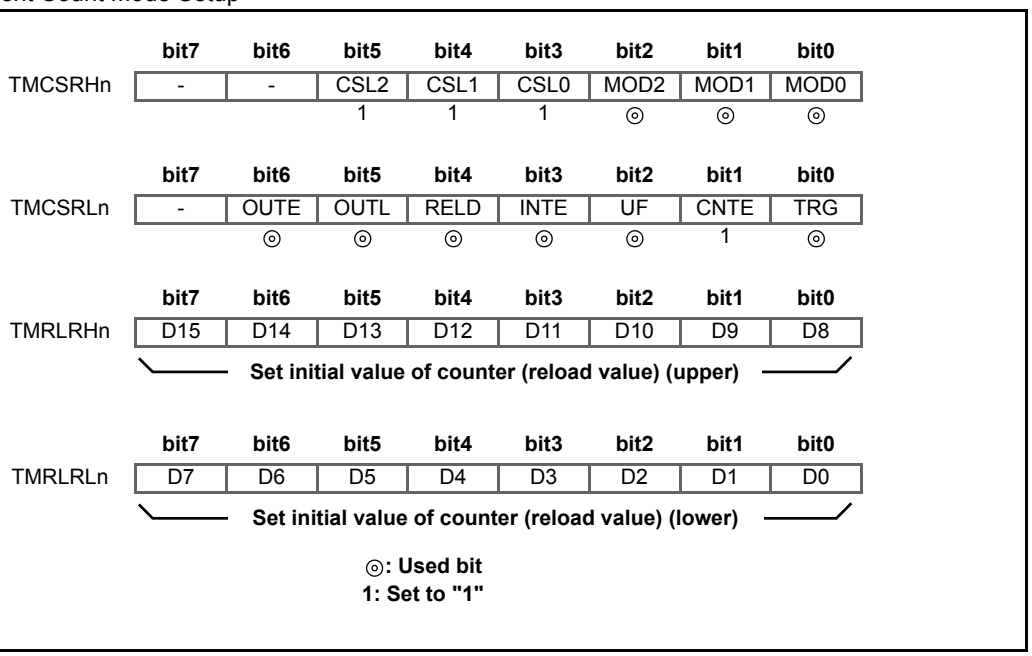

21.6.2.2 Event Count Mode

The value set in the 16-bit reload timer reload register ch. n (TMRLRHn/TMRLRLn) is reloaded to the 16-bit counter when the count enable bit (CNTE) is set to "1" and the software trigger bit (TRG) is set to "1". The counter counts each time the valid edge (rising, falling, or both edges selectable) is detected on the pulses input to the TIn pin (external count clock).

- Operation of reload mode

If the reload select bit (RELD) is "1", the value set in the 16-bit reload timer reload register ch. n (TMRLRHn/TMRLRLn) is reloaded to the 16-bit counter and the count continues when the 16-bit counter underflows ("0x0000" → "0xFFFF").

The underflow interrupt request flag bit (UF) in the 16-bit reload timer control status register (lower) ch. n (TMCSRLn) is set to "1" when an underflow occurs ("0x0000" → "0xFFFF") in the 16-bit counter, and an interrupt request is output if the underflow interrupt enable bit (INTE) is set to "1".

The TOn pin can output a toggle waveform that is inverted each time an underflow occurs. Figure 21-11 shows the count operation in reload mode.

Figure 21-11. Count Operation in Reload Mode (Event Count Mode)

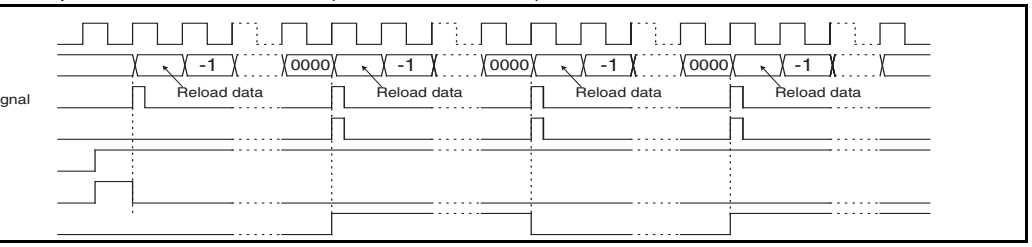

■ Operation of one-shot mode

If the reload select bit (RELD) is "0", the value of the 16-bit counter halts at "0xFFFF" when the 16-bit counter underflows ("0x0000" → "0xFFFF").

An interrupt request is output when the underflow request flag bit (UF) in the 16-bit reload timer control status register (lower) ch. n (TMCSRLn) is set to "1" with the underflow interrupt enable bit (INTE) set to "1".

The TOn pin outputs a square waveform indicating that counting is in progress. Figure 21-12 shows the count operation in one-shot mode.

Figure 21-12. Counter Operation in One-shot Mode (Event Count Mode)

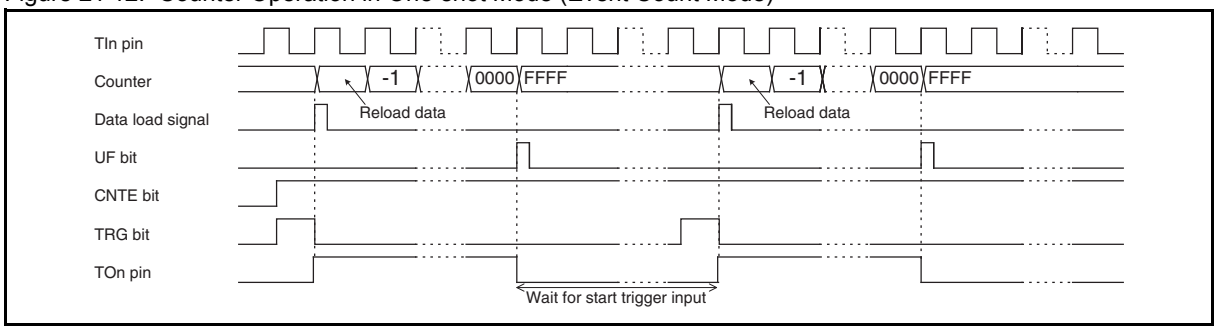

21.7 Registers

This section describes the registers of the 16-bit reload timer.

Table 21-5. List of 16-bit Reload Timer Registers

Register abbreviation	Register name	Reference
TMCSRHn	16-bit reload timer control status register (upper) ch. n	21.7.1
TMCSRLn	16-bit reload timer control status register (lower) ch. n	21.7.2
TMRHn	16-bit reload timer timer register (upper) ch. n	21.7.3
TMRLn	16-bit reload timer timer register (lower) ch. n	21.7.3
TMRLRHn	16-bit reload timer reload register (upper) ch. n	21.7.4
TMRLRLn	16-bit reload timer reload register (lower) ch. n	21.7.4

21.7.1 16-bit Reload Timer Control Status Register (Upper) ch. n (TMCSRHn)

The 16-bit reload timer control status register (upper) ch. n (TMCSRHn) sets the operating mode and operating conditions of the 16-bit reload timer.

Register Configuration

bit	7	6	5	4	3	2	1	0
Field	—	—	CSL2	CSL1	CSL0	MOD2	MOD1	MOD0
Attribute	—	—	R/W	R/W	R/W	R/W	R/W	R/W
Initial value	0	0	0	0	0	0	0	0

Register Functions

[bit7:6] Undefined bits

Their read values are always "0". Writing values to these bits has no effect on operation,

[bit5:3] CSL[2:0]: Count clock select bits

These bits select the count clock for the 16-bit reload timer.

When a value between "0b000" and "0b110" inclusive is written to these bits, the 16-bit reload timer counts with the internal clock (internal clock mode). The internal clock is generated by the prescaler. For details, see 3.9 Operation of Prescaler.

When "0b111" is written to these bits, the 16-bit reload timer counts with the edge of the external event clock (event count mode).

bit5:3	Details	
	Operating mode	Count clock*
Writing "000"	Internal clock mode	1 MCLK
Writing "001"		MCLK/2
Writing "010"		MCLK/4
Writing "011"		MCLK/8
Writing "100"		MCLK/16
Writing "101"		MCLK/32
Writing "110"		$F_{CH}/2^7$ or $F_{CRH}/2^6$ or $F_{MCRPLL}/2^6$
Writing "111"	Event count mode	External clock

*: MCLK: machine clock
F_{CH}: main clock
F_{MCRPLL}: main CR PLL clock
F_{CRH}: main CR clock

[bit2:0] MOD[2:0]: Operating mode select bits

These bits set the operating conditions of the 16-bit reload timer.

- Internal clock mode (CSL[2:0] = any value between 0b000 and 0b110 inclusive)

Select the input pin function with the MOD2 bit.

When the MOD2 bit is "0",

- The TIn pin functions as a trigger input pin.
- Select the edge to be detected using the MOD[1:0] bits.
- When the edge selected in MOD[1:0] is detected, the value set to the 16-bit reload timer reload register (upper/lower) ch. n (TMRLRHn/TMRLRLn) is reloaded to the 16-bit reload timer timer register (upper/lower) ch. n (TMRHn/TMRLn), and the 16-bit reload counter starts counting using TMRHn/TMRLn.

When the MOD2 bit is "1",

- The TIn pin functions as a gate input pin.
- The setting of the MOD1 bit is invalid.
- Select the valid signal level ("H" or "L") with the MOD0 bit. The 16-bit reload timer counts using TMRHn/TMRLn only while the valid signal level is being input.

Note:

When the MOD[2:0] bits are "0b000", external pin input becomes invalid. In this case, use the TRG bit to start the 16-bit reload timer by using the software.

bit2:0	Details (Internal clock mode)	
	TIn pin function	Valid edge/level
Writing "000"	External pin input invalid	—
Writing "001"	Trigger input	Rising edge
Writing "010"		Falling edge
Writing "011"		Both edges
Writing "100"	Gate input	"L" level
Writing "101"		"H" level
Writing "110"		"L" level
Writing "111"		"H" level

- Event count mode (CSL[2:0] = 0b111)
  - The MOD2 bit is always set to "0".
  - The external event clock is input from the TIn pin.
  - Select the edge to be detected using the MOD[1:0] bits.

bit2:0	Details (Event count mode)	
	TIn pin function	Valid edge/level
Writing "000"	External pin input invalid	—
Writing "001"	Trigger input	Rising edge
Writing "010"		Falling edge
Writing "011"		Both edges
Writing "100"	Setting prohibited	
Writing "101"		
Writing "110"		
Writing "111"		

21.7.2 16-bit Reload Timer Control Status Register (Lower) ch. n (TMCSRLn)

The 16-bit reload timer control status register (lower) ch. n (TMCSRLn) sets the operating conditions of the 16-bit reload timer, enables or disables counting, controls interrupts, and checks the interrupt request status.

Register Configuration

bit	7	6	5	4	3	2	1	0
Field	—	OUTE	OUTL	RELD	INTE	UF	CNTE	TRG
Attribute	—	R/W	R/W	R/W	R/W	R/W	R/W	W
Initial value	0	0	0	0	0	0	0	0

Register Functions

[bit7] Undefined bit

The read value is always "0". Writing a value to this bit has no effect on operation.

[bit6] OUTE: Timer output enable bit

This bit sets the TOn pin function of the 16-bit reload timer.

bit6	Details
Writing "0"	The TOn pin functions as a general-purpose I/O port.
Writing "1"	The TOn pin functions as the 16-bit reload timer output pin.

[bit5] OUTL: Pin output level select bit

This bit selects the output level of the output pin of the 16-bit reload timer.

bit5	Details	
	One-shot mode (TMCSRLn:RELD = 0)	Reload mode (TMCSRLn:RELD = 1)
Writing "0"	The output pin outputs "H" level square waveform while the 16-bit reload timer is counting.	The output pin outputs "L" when the 16-bit reload timer is started, and then toggles whenever an underflow occurs.
Writing "1"	The output pin outputs "L" level square waveform while the 16-bit reload timer is counting.	The output pin outputs "H" when the 16-bit reload timer is started, and then toggles whenever an underflow occurs.

[bit4] RELD: Reload select bit

This bit selects the reload operation to be executed when an underflow occurs.

When "0" is written to this bit, the 16-bit reload timer enters one-shot mode. In one-shot mode, when an underflow occurs, the 16-bit reload timer stops counting.

When "1" is written to this bit, the 16-bit reload counter enters reload mode. In reload mode, when an underflow occurs, the value set to the 16-bit reload timer reload register ch. n (TMRLRHn/TMRLRLn) is loaded to the 16-bit reload timer timer register ch. n (TMRHn/TMRLn), and the 16-bit reload timer continues counting.

bit4	Details
Writing "0"	One-shot mode
Writing "1"	Reload mode

[bit3] INTE: Underflow interrupt request enable bit

This bit enables or disables the underflow interrupt.

bit3	Details
Writing "0"	Disables the underflow interrupt.
Writing "1"	Enables the underflow interrupt.

[bit2] UF: Underflow interrupt request flag bit

This bit indicates whether an underflow has occurred in the 16-bit reload timer.

When read by the read-modify-write (RMW) type of instruction, this bit always returns "1".

bit2	Details
Reading "0"	Indicates that no underflow has occurred in the 16-bit reload timer.
Reading "1"	Indicates that an underflow has occurred in the 16-bit reload timer.
Writing "0"	Clears this bit.
Writing "1"	Has no effect on operation.

[bit1] CNTE: Count enable bit

This bit enables or disables the counting operation of the 16-bit reload timer.

When "0" is written to this bit, the 16-bit reload timer stops counting.

When "1" is written to this bit, the 16-bit reload timer enters the start trigger wait state. When a start trigger is input, the 16-bit reload counter starts counting.

bit1	Details
Writing "0"	Stops the 16-bit reload timer counting operation.
Writing "1"	Enables the 16-bit reload timer counting operation (start trigger wait state).

[bit0] TRG: Software trigger bit

This bit enables using the software to start the 16-bit reload timer, and is valid only when the 16-bit reload timer operation is enabled (CNTE = 1).

Writing "0" to this bit has no effect on operation.

When "1" is written to this bit, the value set to the 16-bit reload timer reload register ch. n (TMRLRHn/TMRLRLn) is reloaded to the 16-bit reload timer timer register ch. n (TMRHn/TMRLn), and then the 16-bit reload timer starts counting from the next count clock input.

Note:

Writing "1" to this bit and the CNTE bit simultaneously starts the 16-bit reload timer counting operation.

The read value of this bit is always "0". However, this bit keeps reading "1" from the point at which "1" is written to this bit to start the 16-bit reload timer to the point at which the 16-bit reload timer starts counting.

bit0	Details
Read access	The read value is always "0".
Writing "0"	Has no effect on operation.
Writing "1"	The 16-bit reload timer starts counting from the next count clock input after the value set in TMRLRHn/TMRLRLn is reloaded to TMRHn/TMRLn.

21.7.3 16-bit Reload Timer Timer Register (Upper/Lower) ch. n (TMRHn/TMRLn)

The 16-bit reload timer timer register (upper/lower) ch. n (TMRHn/TMRLn) reads the count value of the 16-bit downcounter.

Register Configuration

TMRHn

bit	7	6	5	4	3	2	1	0
Field	D15	D14	D13	D12	D11	D10	D9	D8
Attribute	R/W	R/W	R/W	R/W	R/W	R/W	R/W	R/W
Initial value	0	0	0	0	0	0	0	0

TMRLn

bit	7	6	5	4	3	2	1	0
Field	D7	D6	D5	D4	D3	D2	D1	D0
Attribute	R/W	R/W	R/W	R/W	R/W	R/W	R/W	R/W
Initial value	0	0	0	0	0	0	0	0

Register Functions

The 16-bit reload timer timer register ch. n reads the count value of the 16-bit downcounter.

If the counting operation has already been enabled (TMCSRLn:CNTE = 1) when the 16-bit reload timer starts counting, the value set to the 16-bit reload timer reload register is reloaded to the 16-bit reload timer timer register ch. n, and then the 16-bit reload timer starts downcounting.

Notes:

- This register can read the count value even during the counting operation of the 16-bit reload timer. To read this register, use a word transfer instruction, or read the upper byte of this register first and then its lower byte. The circuit of the 16-bit reload timer timer register ch. n is configured so that the lower byte value is saved when the upper byte value is read.
- This register is read-only and located at the same address as the 16-bit reload timer reload register ch. n. Therefore, a write access to this register becomes a write access to the 16-bit reload timer reload register ch. n.

21.7.4 16-bit Reload Timer Reload Register (Upper/Lower) ch. n (TMRLRHn/TMRLRLn)

The 16-bit reload timer reload register (upper/lower) ch. n (TMRLRHn/TMRLRLn) sets the reload value for the 16-bit downcounter. The value written to this register is reloaded to the 16-bit downcounter for downcounting.

Register Configuration

TMRLRHn

bit	7	6	5	4	3	2	1	0
Field	D15	D14	D13	D12	D11	D10	D9	D8
Attribute	R/W	R/W	R/W	R/W	R/W	R/W	R/W	R/W
Initial value	0	0	0	0	0	0	0	0

TMRLRLn

bit	7	6	5	4	3	2	1	0
Field	D7	D6	D5	D4	D3	D2	D1	D0
Attribute	R/W	R/W	R/W	R/W	R/W	R/W	R/W	R/W
Initial value	0	0	0	0	0	0	0	0

Register Functions

The 16-bit reload timer reload register ch. n sets the reload value to be reloaded to the 16-bit downcounter.

The value set to the 16-bit reload timer reload register ch. n is reloaded to the 16-bit downcounter for downcounting when the 16-bit reload timer starts or when an underflow occurs. In addition, the value of this register can be modified during the counting operation of the 16-bit reload timer.

Notes:

- A value can be written to this register even during the counting operation of the 16-bit reload timer. To write a value to this register, use a word transfer instruction, or write the upper byte of this register first and then its lower byte. The 16-bit reload timer reload register ch. n has a circuit configured so that the upper byte value becomes valid when a value is written to the lower byte.
- This register is write-only and located at the same address as the 16-bit reload timer timer register ch. n. Therefore, a read access to this register becomes a read access to the 16-bit reload timer timer register ch. n.

21.8 Notes on Using 16-bit Reload Timer

This section provides notes on using the 16-bit reload timer.

21.8.1 Notes on Using 16-bit Reload Timer

- Notes on setting the program

1. The 16-bit reload timer timer register ch. n (TMRHn/TMRLn) can read the count value even during the counting operation of the 16-bit reload timer. To read this register, use a word transfer instruction, or read the upper byte of this register first and then its lower byte.
2. A value can be written to the 16-bit reload timer reload register ch. n (TMRLRHn/ TMRLRLn) even during the counting operation of the 16-bit reload timer. To write a value to this register, use a word transfer instruction, or write the upper byte of this register first and then its lower byte.

- Notes on interrupts

With the underflow interrupt request enabled (TMCSRLn:INTE = 1), if the underflow interrupt request flag bit (UF) in the 16-bit reload timer control status register (lower) ch. n (TMCSRLn) is set to "1", the CPU cannot wake up from the interrupt service routine. Therefore, always clear the UF bit in the interrupt service routine.

22. UART/SIO

This chapter describes the functions and operations of UART/SIO.

22.1 Overview

22.2 Configuration

22.3 Channel

22.4 Pins

22.5 Interrupts

22.6 Operations and Setting Procedure Example

22.7 Registers

22.1 Overview

The UART/SIO is a general-purpose serial data communication interface. Serial data transfers of variable-length data can be made with a synchronous or asynchronous clock. The transfer format is NRZ. The transfer rate can be set with the dedicated baud rate generator or external clock (in clock synchronous mode (SIO)).

22.1.1 Functions of UART/SIO

The UART/SIO is capable of serial data transmission/reception (serial input/output) to and from another CPU or peripheral device.

- Equipped with a full-duplex double buffer that allows 2-way full-duplex communication.
- The synchronous or asynchronous transfer mode can be selected.
- The optimum baud rate can be selected with the dedicated baud rate generator.
- The data length is variable; it can be set to 5 bit to 8 bit when no parity is used or to 6 bit to 9 bit when parity is used. (See Table 22-1.)
- The serial data direction (endian) can be selected.
- The data transfer format is NRZ (Non-Return-to-Zero).
- Two operation modes (operation modes 0 and 1) are available.
  Operation mode 0 operates as clock asynchronous mode (UART). Operation mode 1 operates as clock synchronous mode (SIO).

.

Table 22-1. UART/SIO Operation Modes

Operation mode	Data length		Synchronization mode	Length of stop bit
	No parity	With parity		
0	5	6	Asynchronous	1 bit or 2 bits
	6	7		
	7	8		
	8	9		
1	5	-	Synchronous	-
	6	-		
	7	-		
	8	-		

22.2 Configuration

The UART/SIO consists of the following blocks:

- UART/SIO serial mode control register 1 ch. n (SMC1n)
- UART/SIO serial mode control register 2 ch. n (SMC2n)
- UART/SIO serial status and data register ch. n (SSRn)
- UART/SIO serial input data register ch. n (RDRn)
- UART/SIO serial output data register ch. n (TDRn)

The number of pins and that of channels of the UART/SIO vary among products. For details, refer to the device data sheet.

In this chapter, "n" in a pin name and a register abbreviation represents the channel number. For details of pin names, register names and register abbreviations of a product, refer to the device data sheet.

22.2.1 Block Diagram of UART/SIO

Figure 22-1. Block Diagram of UART/SIO

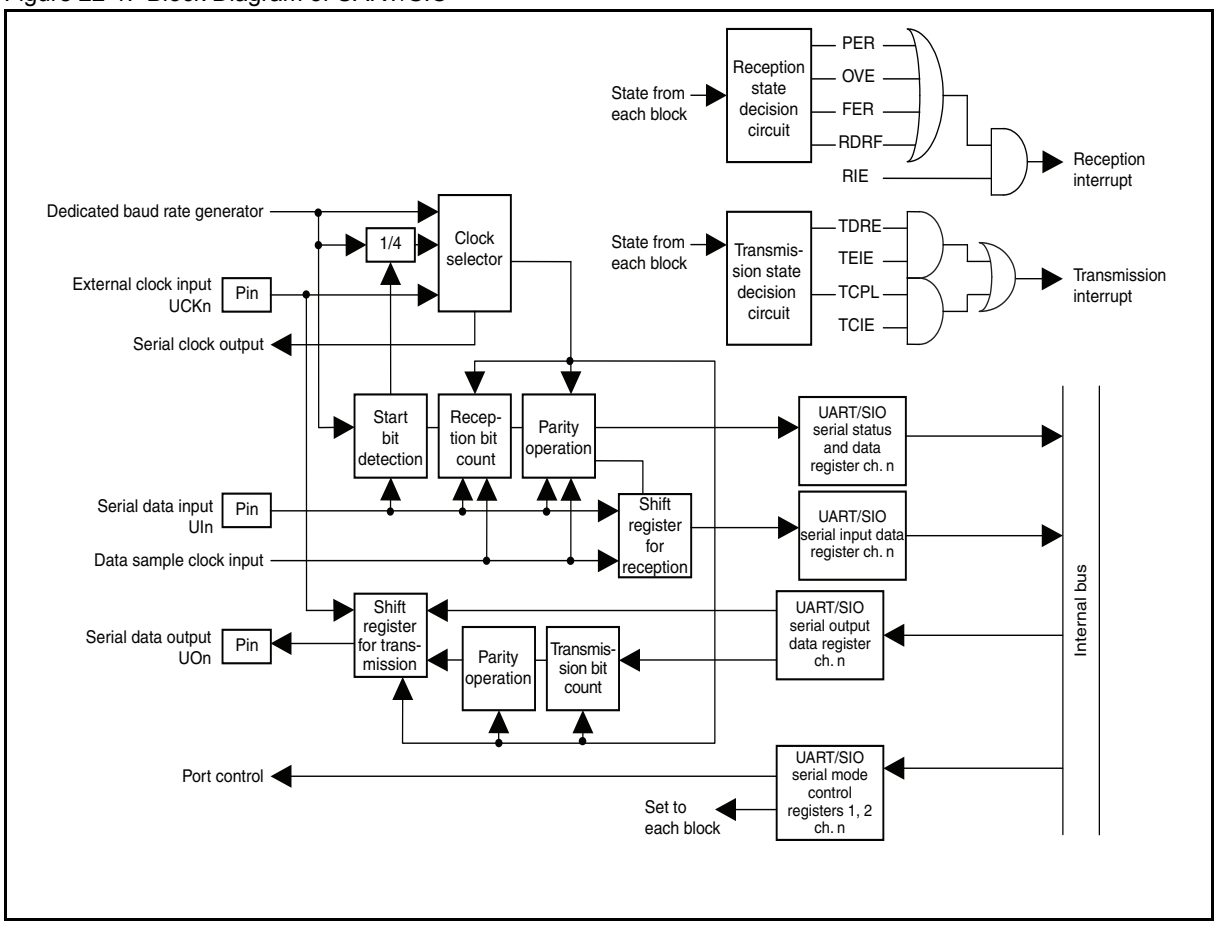

- UART/SIO serial mode control register 1 ch. n (SMC1n)

This register controls UART/SIO operation mode. It is used to set the serial data direction (endian), parity and its polarity, stop bit length, operation mode (synchronous/asynchronous), data length, and serial clock.

- UART/SIO serial mode control register 2 ch. n (SMC2n)

This register controls UART/SIO operation mode. It is used to enable/disable serial clock output, serial data output, transmission/reception, and interrupts and to clear the receive error flag.

- UART/SIO serial status and data register ch. n (SSRn)

This register indicates the transmission/reception status and error status of UART/SIO.

- UART/SIO serial input data register ch. n (RDRn)

This register holds the receive data. The serial input is converted and then stored in this register.

- UART/SIO serial output data register ch. n (TDRn)

This register sets the transmit data. Data written to this register is serial-converted and then output.

22.2.2 Input Clock

The UART/SIO uses the output clock (internal clock) from the dedicated baud rate generator or the input signal (external clock) from the UCKn pin as its input clock (serial clock).

22.3 Channel

This section describes the channel of UART/SIO.

22.3.1 Channel of UART/SIO

Table 22-2 and Table 22-3 show the pins and registers of UART/SIO respectively.

Table 22-2. Pins of UART/SIO

Pin name	Pin function
UCKn	Clock input/output
UOn	Data output
UIn	Data input

Table 22-3. Registers of UART/SIO

Register abbreviation	Corresponding register (Name in this manual)
SMC1n	UART/SIO serial mode control register 1 ch. n
SMC2n	UART/SIO serial mode control register 2 ch. n
SSRn	UART/SIO serial status and data register ch. n
TDRn	UART/SIO serial output data register ch. n
RDRn	UART/SIO serial input data register ch. n

22.4 Pins

This section describes the pins of the UART/SIO.

22.4.1 Pins of UART/SIO

The pins of UART/SIO are the clock input and output pin (UCKn), serial data output pin (UOn) and serial data input pin (UIn).

- UCKn

Clock input/output pin for UART/SIO.

When the clock output is enabled (SMC2n:SCKE=1), it serves as a UART/SIO clock output pin (UCKn) regardless of the value of the corresponding port direction register. At this time, do not select the external clock (set SMC1n:CKS = 0).

When it is to be used as a UART/SIO clock input pin, disable the clock output (SMC2n:SCKE = 0) and make sure that it is set as input port by the corresponding port direction register. At this time, be sure to select the external clock (set SMC1n:CKS = 0).

- UOn

Serial data output pin for UART/SIO. When the serial data output is enabled (SMC2n:TXOE = 1), it serves as a UART/SIO serial data output pin (UOn) regardless of the value of the corresponding port direction register.

- UIn

Serial data input pin for UART/SIO. When it is to be used as a UART/SIO serial data input pin, make sure that it is set as input port by the corresponding port direction register.

22.5 Interrupts

The UART/SIO has six interrupt-related bits: receive error flag bits (PER, OVE, FER), receive data register full flag bit (RDRF), transmit data register empty flag bit (TDRE), and transmission completion flag bit (TCPL).

22.5.1 Interrupts of UART/SIO

Table 22-4. lists the UART/SIO interrupt control bits and interrupt sources.

Table 22-4. UART/SIO Interrupt Control Bits and Interrupt Sources

Item	Description					
Interrupt request flag bit	SSRn:TDRE	SSRn:TCPL	SSRn:RDRF	SSRn:PER	SSRn:OVE	SSRn:FER
Interrupt request enable bit	SMC2n:TEIE	SMC2n:TCIE	SMC2n:RIE	SMC2n:RIE	SMC2n:RIE	SMC2n:RIE
Interrupt source	Transmit data register empty	Transmission completion	Receive data full	Parity error	Overrun error	Framing error

22.5.2 Transmit Interrupt

When transmit data is written to the UART/SIO serial output data register ch. n (TDRn), the data is transferred to the transmission shift register. When the next piece of data can be written, the TDRE bit is set to "1". At this time, an interrupt request to the interrupt controller occurs when transmit data register empty interrupt enable bit has been enabled (SMC2n:TEIE = 1).

The TCPL bit is set to "1" upon completion of transmission of all pieces of transmit data. At this time, an interrupt request to the interrupt controller occurs when transmission completion interrupt enable bit has been enabled (SMC2n:TCIE = 1).

22.5.3 Receive Interrupt

If the data is input successfully up to the stop bit, the RDRF bit is set to "1". If an overrun error, a parity error, or a framing error occurs, the corresponding error flag bit (PER, OVE, or FER) is set to "1".

These bits are set when a stop bit is detected. If receive interrupt enable bit has been enabled (SMC2n:RIE = 1), an interrupt request to the interrupt controller will be generated.

22.6 Operations and Setting Procedure Example

The UART/SIO has a serial communication function (operation mode 0, 1).

Operations of UART/SIO

- Operation mode

Two operation modes are available in the UART/SIO. Clock synchronous mode (SIO) or clock asynchronous mode (UART) can be selected (See Table 22-5).

Table 22-5. Operation Modes of UART/SIO

Operation mode	Data length		Synchronization mode	Length of stop bit
	No parity	With parity		
0	5	6	Asynchronous	1 bit or 2 bits
	6	7		
	7	8		
	8	9		
1	5	-	Synchronous	-
	6	-		
	7	-		
	8	-		

Setting Procedure Example

Below is an example of procedure for setting the UART/SIO.

- Initial setup

1. Set the port input. (DDR)
2. Set the interrupt level. (ILR*)
3. Set the prescaler. (PSSRn)
4. Set the baud rate. (BRSRn)
5. Select the clock. (SMC1n:CKS)
6. Set the operation mode. (SMC1n:MD)
7. Enable/disable the serial clock output. (SMC2n:SCKE)
8. Enable reception. (SMC2n:RXE = 1)
9. Enable interrupts. (SMC2n:RIE = 1)

*: For details of the interrupt level setting register (ILR), refer to Chapter 5.Interrupts in this hardware manual and " Interrupt Source Table" in the device data sheet.

- Interrupt processing

Read receive data. (RDRn)

22.6.1 Operations in Operation Mode 0

Operation mode 0 operates as clock asynchronous mode (UART).

22.6.1.1 Operations in UART/SIO Operation Mode 0

Clock asynchronous mode (UART) is selected when the MD bit in the UART/SIO serial mode control register 1 ch. n (SMC1n) is set to "0".

- Baud rate

The serial clock is selected by the CKS bit in the SMC1n register. Be sure to select the dedicated baud rate generator at this time.

The baud rate is equivalent to the output clock frequency of the dedicated baud rate generator, divided by four. The UART can perform communication within the range from –3% to +3% of the selected baud rate.

The baud rate generated by the dedicated baud rate generator is obtained from the equation illustrated below. (For information about the dedicated baud rate generator, see Chapter 23.UART/SIO Dedicated Baud Rate Generator.)

Figure 22-2. Baud Rate Calculation when Using Dedicated Baud Rate Generator

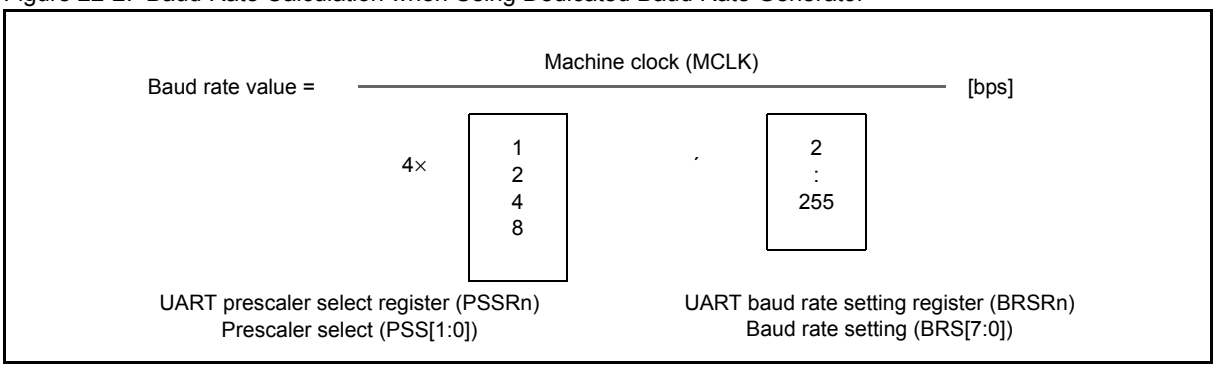

Table 22-6. Sample Asynchronous Transfer Rates Based on Dedicated Baud Rate Generator (Machine clock = 10 MHz, 16 MHz, 16.25 MHz)

Dedicated baud rate generator setting		UART internal division	Total division ratio (PSS × BRS × 4)	Baud rate (10 MHz / Total division ratio)	Baud rate (16 MHz / Total division ratio)	Baud rate (16.25 MHz / Total division ratio)
Prescaler select PSS[1:0]	Baud rate counter setting BRS[7:0]					
1 (Setting value: 0,0)	20	4	80	125000	200000	203125
1 (Setting value: 0,0)	22	4	88	113636	181818	184659
1 (Setting value: 0,0)	44	4	176	56818	90909	92330
1 (Setting value: 0,0)	87	4	348	28736	45977	46695
1 (Setting value: 0,0)	130	4	520	19231	30769	31250
2 (Setting value: 0,1)	130	4	1040	9615	15385	15625
4 (Setting value: 1,0)	130	4	2080	4808	7692	7813
8 (Setting value: 1,1)	130	4	4160	2404	3846	3906

The baud rate in clock asynchronous mode (UART) can be set in the following range.

Table 22-7. Baud Rate Setting Range in Clock Asynchronous Mode (UART)

PSS[1:0]	BRS[7:0]
0b00 to 0b11	0x02 (2) to 0xFF (255)

■ Transfer data format

UART can treat data only in NRZ (Non-Return-to-Zero) format. Figure 22-3. shows the data format.

The character bit length can be selected from among 5 to 8 bits depending on the settings of SMC1n:CBL[1:0].

The stop bit length can be set to 1 or 2 bits depending on the setting of SMC1n:SBL.

The PEN bit and TDP bit in the SMC1n register can be used to enable/disable parity and to select parity polarity.

As shown in Figure 22-3., the transfer data always starts from the start bit ("L" level) and ends with the stop bit ("H" level) by performing the specified data bit length transfer with MSB first or LSB first ("LSB first" or "MSB first" can be selected by the BDS bit in the SMC1n register). It becomes "H" level at the idle state.

Figure 22-3. Transfer Data Format

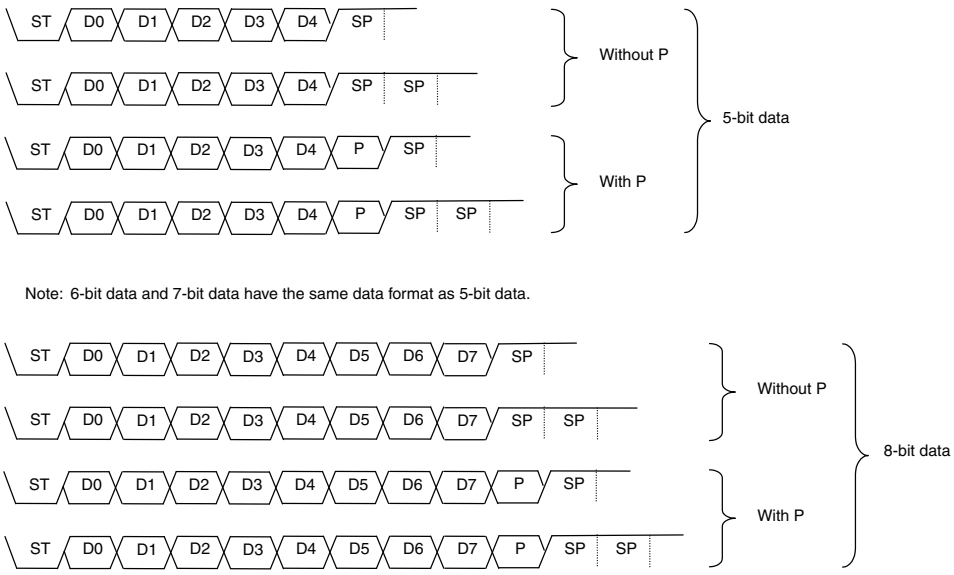

■ Reception in clock asynchronous mode (UART)

Use UART/SIO serial mode control register 1 ch. n (SMC1n) to select the serial data direction (endian), parity/non-parity, parity polarity, stop bit length, character bit length, and clock.

Reception remains performed as long as the reception operation enable bit (SMC2n:RXE) contains "1".

Upon detection of a start bit in receive data with the RXE bit set to "1", one frame of data is received according to the data format set in UART/SIO serial control register 1 ch. n (SMC1n).

When the reception of one frame of data has been completed, the received data is transferred to the UART/SIO serial input data register ch. n (RDRn) and the next frame of serial data can be received.

When the RDRn register stores data, the receive data register full flag bit (SSRn:RDRF) is set to "1".

A receive interrupt occurs the moment the RDRF bit is set to "1" when the receive interrupt enable bit (SMC2n:RIE) contains "1".

Received data is read from the RDRn register after each error flag (PER, OVE, FER) in the UART/SIO serial status and data register ch. n (SSRn) is checked.

When received data is read from the RDRn register, the RDRF bit is cleared to "0".

Note that modifying the SMC1n register during reception may result in unpredictable operation. If the RXE bit is set to "0" during reception, the reception is immediately disabled and initialization will be performed. The data received up to that point

will not be transferred to the serial input data register.

Figure 22-4. Receive Operation in Clock Asynchronous Mode (UART)

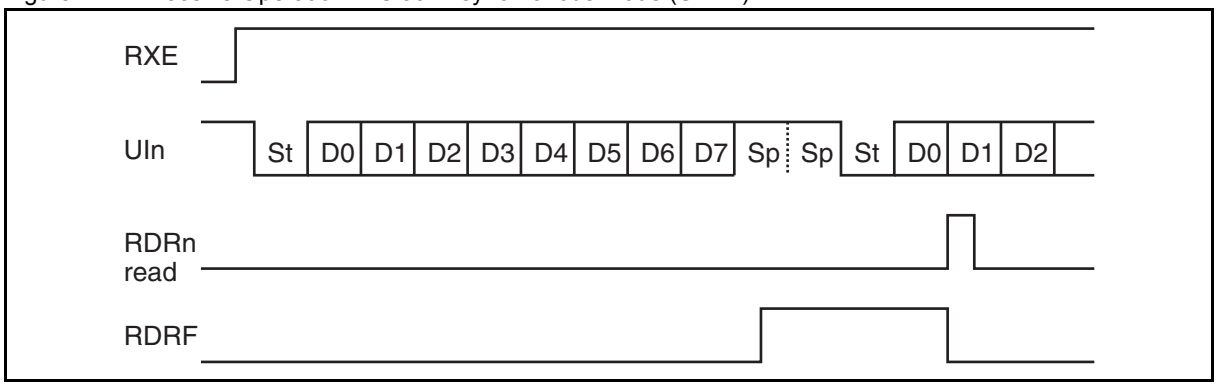

■ Receive error in clock asynchronous mode (UART)

If any of the following three error flags (PER, FER, OVE) has been set, receive data is not transferred to the UART/SIO serial input data register ch. n (RDRn) and the receive data register full flag bit (RDRF) is not set to "1" either.

1. Parity error (PER)
   The parity error bit (PER) is set to "1" if the parity bit in received serial data does not match the parity polarity bit (TDP) when the parity control bit (PEN) contains "1".
2. Framing error (FER)
   The framing error bit (FER) is set to "1" if "1" is not detected at the position of the first stop bit in serial data received in the set character bit length (CBL) under parity control (PEN).
   Note that the stop bit is not checked if it appears at the second bit or later.
3. Overrun error (OVE)
   Upon completion of reception of serial data, the overrun error bit (OVE) is set to "1" if the reception of the next data is performed before the previous receive data is read.

Each flag is set at the position of the first stop bit.

Figure 22-5. Setting Timing for Receive Errors

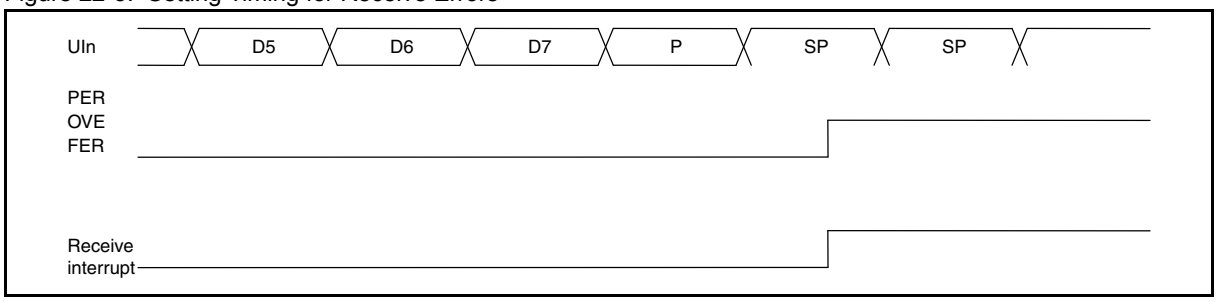

■ Start bit detection and confirmation of receive data during reception

The start bit is detected by a falling of the serial input followed by a succession of three "L" levels after the serial data input is sampled according to the clock (BRCLK) signal provided by the dedicated baud rate generator with the reception operation enable bit (RXE) set to "1". When the first "H", "L", "L", "L" train is detected in a BRCLK sample, therefore, the current bit is regarded as the start bit.

The frequency-quartered circuit is activated upon detection of the start bit and serial data is input to the reception shift register at intervals of four periods of BRCLK.

When data is received, sampling is performed at three points of the baud rate clock (BRCLK) and data sampling clock (DSCLK) and received data is confirmed on a majority basis when two bits out of three match.

Figure 22-6. Start Bit Detection and Serial Data Input

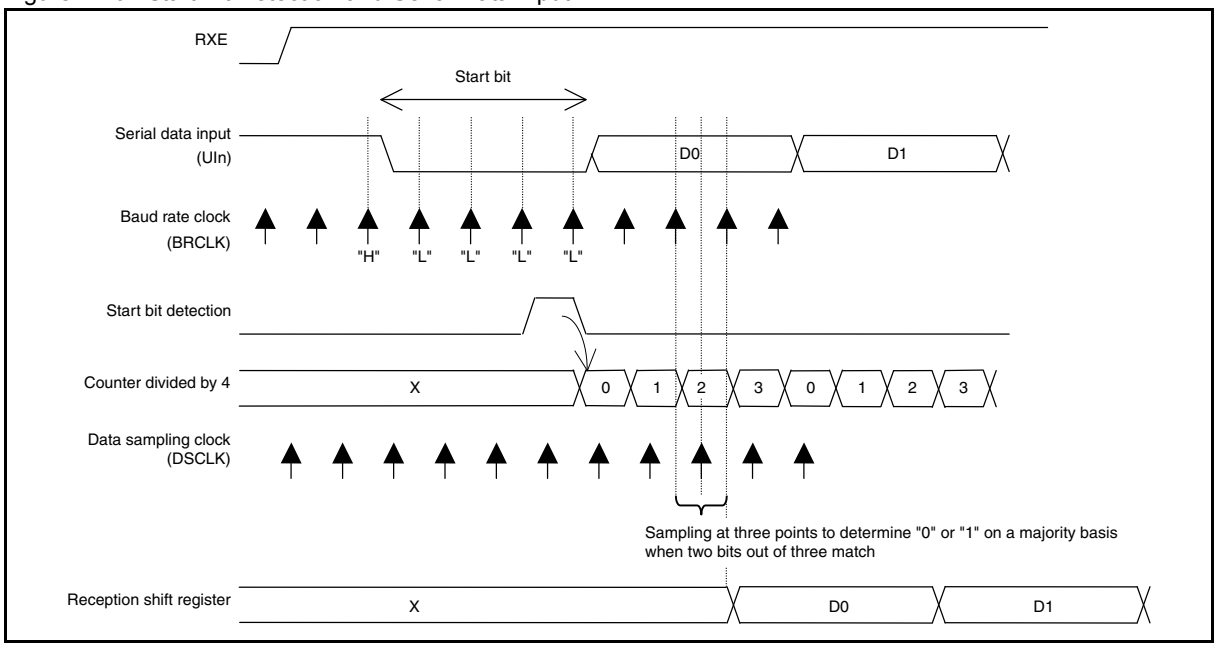

■ Transmission in clock asynchronous mode (UART)

Use UART/SIO serial mode control register 1 ch. n (SMC1n) to select the serial data direction (endian), parity/non-parity, parity polarity, stop bit length, character bit length, and clock.

Either of the following two procedures can be used to initiate the transmission process:

- Set the transmission operation enable bit (TXE) to "1", and then write transmit data to the UART/SIO serial output data register ch. n (TDRn) to start transmission.
- Write transmit data to the UART/SIO serial output data register ch. n (TDRn), and then set the transmission operation enable bit (TXE) to "1" to start transmission.

Transmit data is written to the TDRn register after it is checked that the transmit data register empty flag bit (TDRE) set to "1".

When the transmit data is written to the TDRn register, the TDRE bit is cleared to "0".

The transmit data is transferred from the TDRn register to the transmission shift register, and the TDRE bit is set to "1".

When the transmit interrupt enable bit (TIE) contains "1", a transmit interrupt occurs if the TDRE bit is set to "1". This allows the next piece of transmit data to be written to the TDRn register by interrupt handling.

To detect the completion of serial transmission by transmit interrupt, set the transmission completion interrupt enable bits as follows: TEIE = 0, TCIE = 1. Upon completion of transmission, the transmission completion flag bit (SSRn:TCPL) is set to "1" and a transmit interrupt occurs.

The TCPL bit, and the TDRE bit in consecutive data transmission are set at the position which the transmission of the last bit was completed (it varies depending on the data length, parity enable, or stop bit length setting), as shown in Figure 22-7.

Note that modifying UART/SIO serial mode control register 1 ch. n (SMC1n) during transmission may result in unpredictable operation.

Figure 22-7. Transmission in Clock Asynchronous Mode (UART)

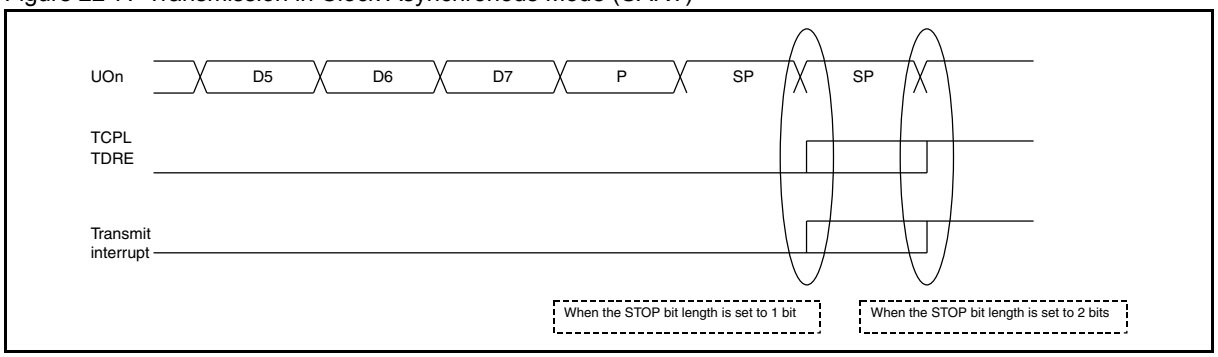

The TDRE bit is set at the point indicated in Figure 22-8 or Figure 22-9 if the preceding piece of transmit data does not exist in the transmission shift register.

Figure 22-8. Setting Timing 1 for Transmit Data Register Empty Flag Bit (TDRE)(When TXE Is "1")

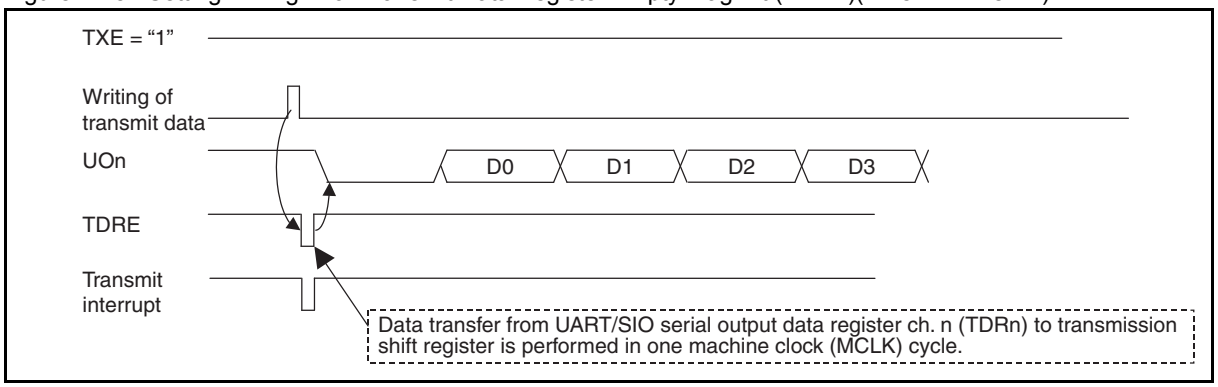

Figure 22-9. Setting Timing 2 for Transmit Data Register Empty Flag Bit (TDRE) (When TXE Is Switched from "0" to "1")

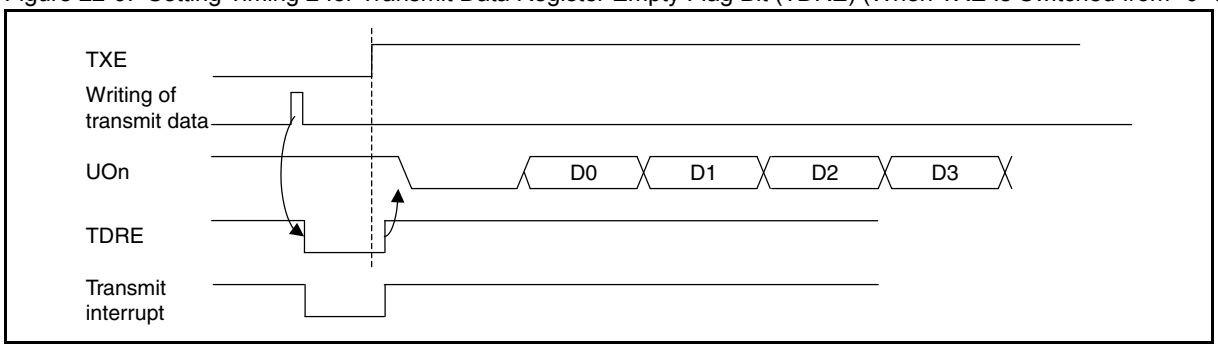

■ Concurrent transmission and reception

In clock asynchronous mode (UART), transmission and reception can be performed independently. Therefore, transmission and reception can be performed at the same time or even with transmitting and receiving frames overlapping each other in shifted phases.

22.6.2 Operations in Operation Mode 1

Operation mode 1 operates in clock synchronous mode (SIO).

22.6.2.1 Operations in UART/SIO Operation Mode 1

Setting the MD bit in the UART/SIO serial mode control register 1 ch. n (SMC1n) to "1" selects synchronous clock mode (SIO).

The character bit length in synchronous clock mode (SIO) is variable between 5 bits and 8 bits.

Note, however, that parity is disabled and no stop bit is used.

The serial clock is selected by the CKS bit in the SMC1n register. Select the dedicated baud rate generator or external clock. The SIO performs shift operation using the selected serial clock as a shift clock.

To input the external clock signal, set the SMC2n:SCKE bit to "0".

To output the dedicated baud rate generator output as a shift clock signal, set the SCKE bit to "1". The serial clock signal is obtained by dividing clock by two, which is supplied by the dedicated baud rate generator. The baud rate in the SIO mode can be set in the following range. (For more information about the dedicated baud rate generator, also see Chapter 23.UART/SIO Dedicated Baud Rate Generator.)

Table 22-8. Baud Rate Setting Range in Clock Synchronous Mode (SIO)

PSS[1:0]	BRS[7:0]
0b00 to 0b11	0x01(1) to 0xFF(255), 0x00(256) (The highest and lowest baud rate settings are 0x01 and 0x00, respectively.)

The baud rate applied when the external clock or dedicated baud rate generator is used is obtained from the corresponding equation illustrated below.

Figure 22-10. Calculating Baud Rate Based on External Clock

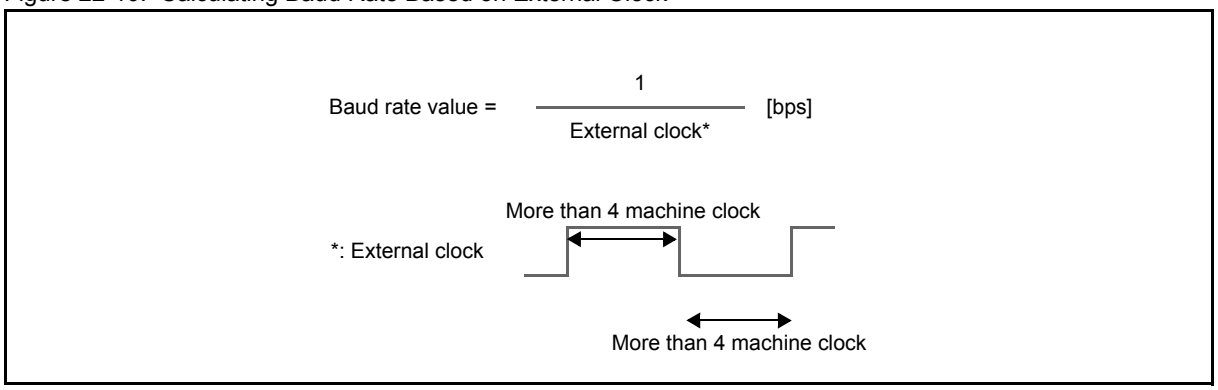

Figure 22-11. Baud Rate Calculation Formula for Using Dedicated Baud Rate Generator

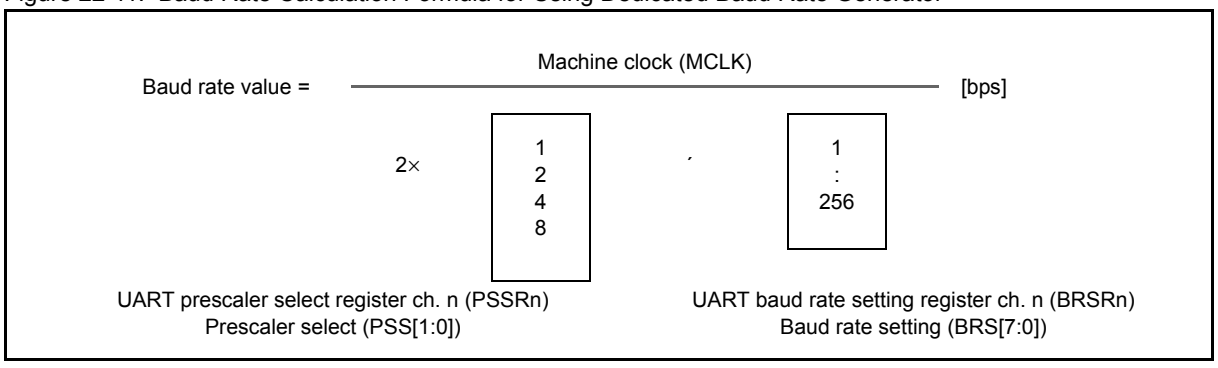

- Serial clock

The serial clock signal is output under control of the output for transmit data. When only reception is performed, therefore, set transmission control (SMC2n:TXE = 1) to write dummy transmit data to the UART/SIO serial output register. Refer to the device data sheet for the UCKn clock value.

- Reception in UART/SIO operation mode 1

For reception in operation mode 1, each register is used as shown in Figure 22-12.

Figure 22-12. Registers Used for Reception in Operation Mode 1

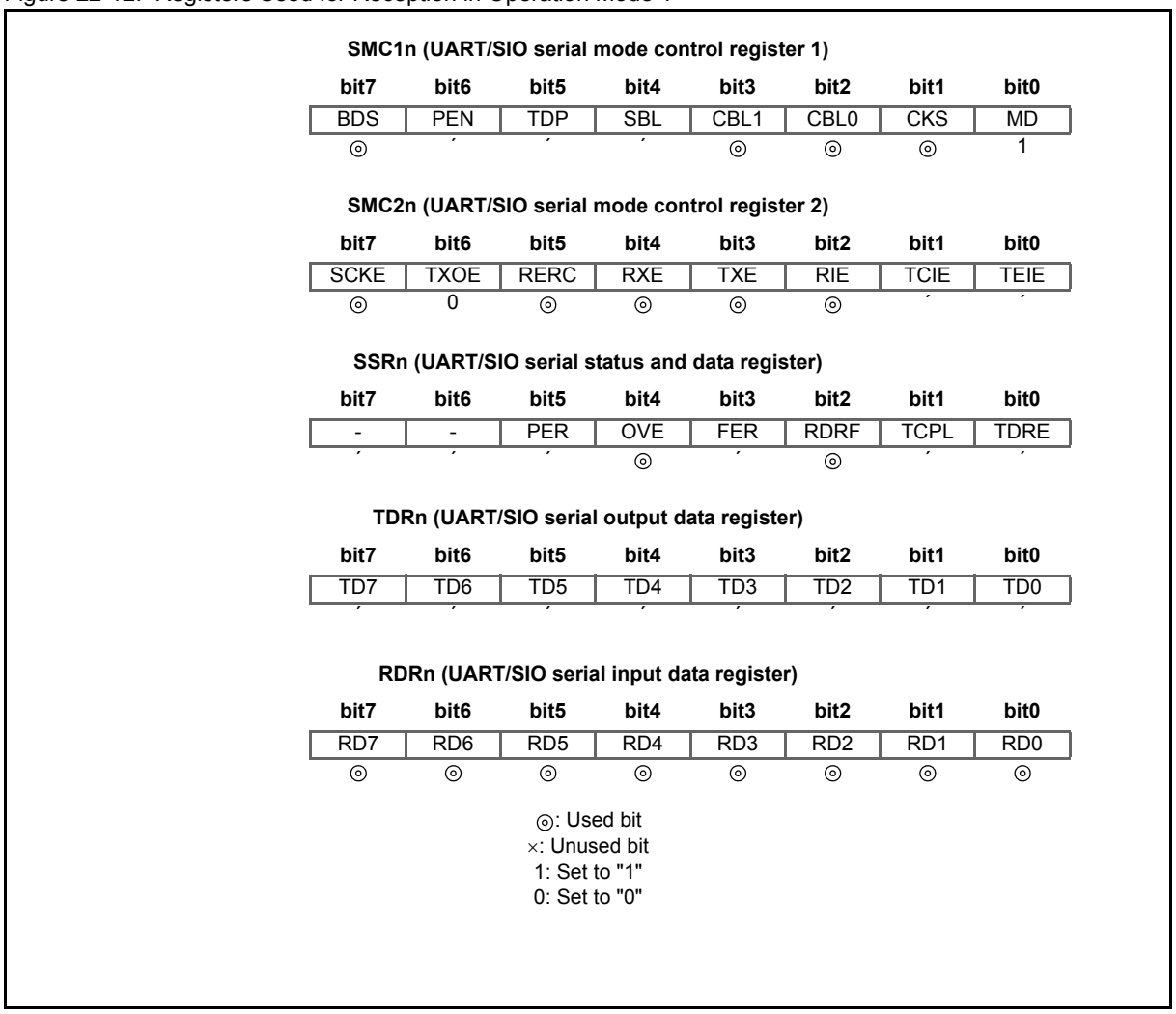

The reception depends on whether the serial clock has been set to external or internal clock.

<When external clock is enabled>

When the reception operation enable bit (RXE) contains "1", serial data is received always at the rising edge of the external clock signal.

<When internal clock is enabled>

The serial clock signal is output in accordance with transmission. Therefore, transmission must be performed even when only performing reception. The following two procedures can be used.

- Set the transmission operation enable bit (TXE) to "1", then write transmit data to the UART/SIO serial output data register to generate the serial clock signal and start reception.
- Write transmit data to the TDRn register, then set the TXE bit to "1" to generate the serial clock signal and start reception.

When 5-bit to 8-bit serial data is received by the reception shift register, the received data is transferred to the UART/SIO serial input data register ch. n (RDRn) and the next piece of serial data can be received.

When the RDRn register stores data, the receive data register full flag bit (RDRF) is set to "1".

A receive interrupt occurs the moment the RDRF bit is set to "1" when the receive interrupt enable bit (RIE) contains "1".

To read received data, read it from the RDRn register after checking the overrun error flag bit (OVE) in the UART/SIO serial status and data register ch. n (SSRn).

When received data is read from the RDRn register, the RDRF bit is cleared to "0".

Figure 22-13. 8-bit Reception of Synchronous Clock Mode

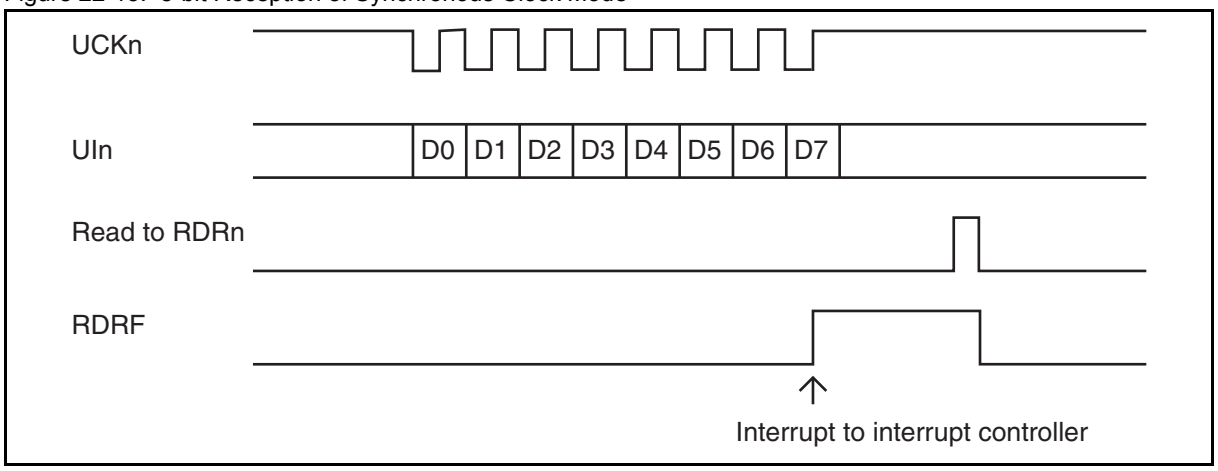

Operation when receive error occurs

When an overrun error (OVE = 1) occurs, received data is not transferred to the RDRn register.

Overrun error (OVE = 1)

Upon completion of reception for serial data, the OVE bit is set to "1" if the RDRF bit has been set to "1" by the reception for the preceding piece of data.

Figure 22-14. Overrun Error

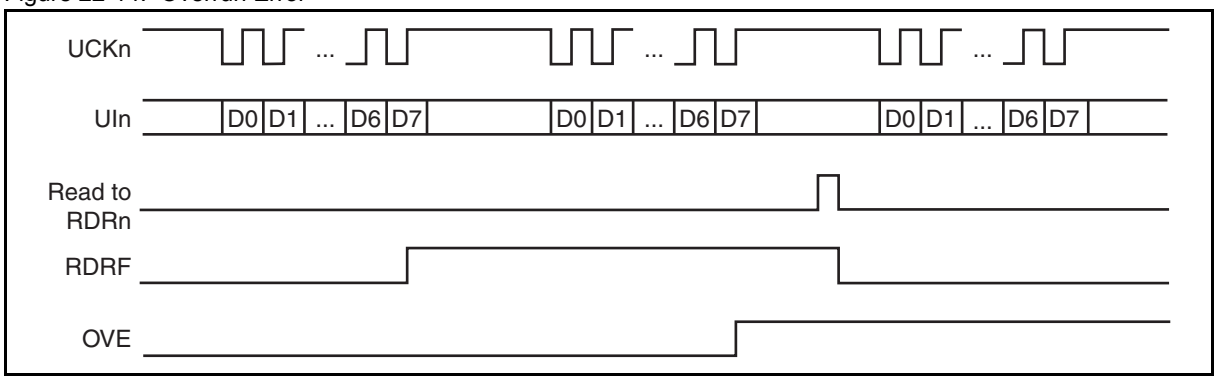

■ Transmission in UART/SIO operation mode 1

For transmission in operation mode 1, each register is used as shown below.

Figure 22-15. Registers Used for Transmission in Operation Mode 1

SMC1n (UART/SIO serial mode control register 1)

bit7	bit6	bit5	bit4	bit3	bit2	bit1	bit0
BDS	PEN	TDP	SBL	CBL1	CBL0	CKS	MD
◎	´	´	´	◎	◎	◎	1

SMC2n (UART/SIO serial mode control register 2)

bit7	bit6	bit5	bit4	bit3	bit2	bit1	bit0
SCKE	TXOE	RERC	RXE	TXE	RIE	TCIE	TEIE
◎	1	´	´	◎	´	◎	◎

SSRn (UART/SIO serial status and data register)

bit7	bit6	bit5	bit4	bit3	bit2	bit1	bit0
-	-	PER	OVE	FER	RDRF	TCPL	TDRE
´	´	´	´	´	´	◎	◎

TDRn (UART/SIO serial output data register)

bit7	bit6	bit5	bit4	bit3	bit2	bit1	bit0
TD7	TD6	TD5	TD4	TD3	TD2	TD1	TD0
◎	◎	◎	◎	◎	◎	◎	◎

RDRn (UART/SIO serial input data register)

bit7	bit6	bit5	bit4	bit3	bit2	bit1	bit0
RD7	RD6	RD5	RD4	RD3	RD2	RD1	RD0
´	´	´	´	´	´	´	´

◎: Used bit
×: Unused bit
1: Set to "1"
0: Set to "0"

The following two procedures can be used to initiate the transmission process:

- Set the transmission operation enable bit (TXE) to "1", then write transmit data to the TDRn register to start transmission.
- Write transmit data to the TDRn register, then set the TXE bit to "1" to start transmission.

Transmit data is written to the TDRn register after it is checked that the transmit data register empty flag bit (TDRE) is set to "1".

When the transmit data is written to the TDRn register, the TDRE bit is cleared to "0".

When serial transmission is started after transmit data is transferred from the TDRn register to the transmission shift register, the TDRE bit is set to "1".

When the use of the external clock signal has been set, serial data transmission starts at the fall of the first serial clock signal after the transmission process is started.

A transmission completion interrupt occurs the moment the TDRE bit is set to "1" when the transmit interrupt enable bit (TIE) contains "1". At this time, the next piece of transmit data can be written to the TDRn register. Serial transmission can be continued with the TXE bit set to "1".

To use a transmission completion interrupt to detect the completion of serial transmission, enable transmission completion interrupt output this way: TEIE = 0, TCIE = 1. Upon completion of transmission, the transmission completion flag bit (SSRn:TCPL) is set to "1" and a transmission completion interrupt occurs.

Figure 22-16. 8-bit Transmission in Synchronous Clock Mode

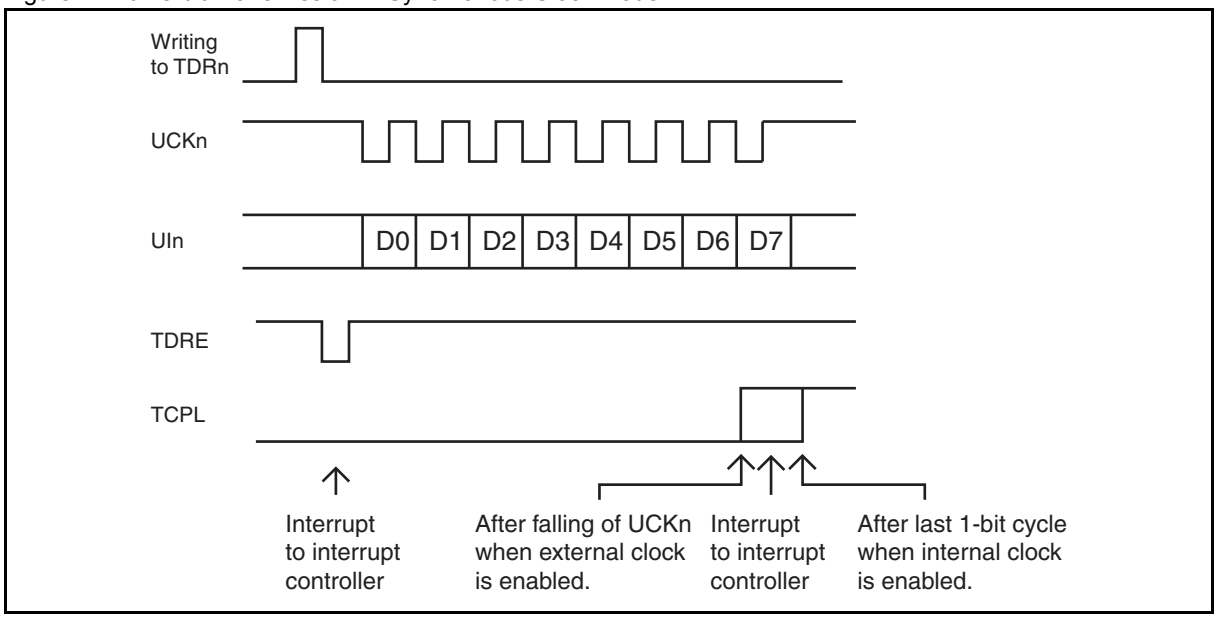

- Concurrent transmission and reception

<When external clock is enabled>

Transmission and reception can be performed independently of each other. Transmission and reception can therefore be performed at the same time or even when their phases are shifted from each other and overlapping.

<When internal clock is enabled>

As the transmitting side generates a serial clock, reception is influenced.

If transmission stops during reception, the receiving side is suspended. It resumes reception when the transmitting side is restarted.

See 22.4 Pins for operation with serial clock output and operation with serial clock input.

22.7 Registers

This section describes the registers of the UART/SIO.

Table 22-9. List of UART/SIO Registers

Register abbreviation	Register name	Reference
SMC1n	UART/SIO serial mode control register 1 ch. n	22.7.1
SMC2n	UART/SIO serial mode control register 2 ch. n	22.7.2
SSRn	UART/SIO serial status and data register ch. n	22.7.3
RDRn	UART/SIO serial input data register ch. n	22.7.4
TDRn	UART/SIO serial output data register ch. n	22.7.5

22.7.1 UART/SIO Serial Mode Control Register 1 ch. n (SMC1n)

The UART/SIO serial mode control register 1 ch. n (SMC1n) controls the UART/SIO operation mode. The register is used to set the serial data direction (endian), parity and its polarity, stop bit length, operation mode (clock synchronous mode / clock asynchronous mode), data length, and serial clock.

Register Configuration

bit	7	6	5	4	3	2	1	0
Field	BDS	PEN	TDP	SBL	CBL1	CBL0	CKS	MD
Attribute	R/W	R/W	R/W	R/W	R/W	R/W	R/W	R/W
Initial value	0	0	0	0	0	0	0	0

Register Functions

[bit7] BDS: Serial data direction control bit

This bit controls the serial data direction (endian).

bit7	Details
Writing "0"	Transmission or reception starts from the LSB in the UART/SIO serial input/output data register ch. n (RDRn/TDRn).
Writing "1"	Transmission or reception starts from the MSB in the UART/SIO serial input/output data register ch. n (RDRn/TDRn).

[bit6] PEN: Parity control bit

This bit enables or disables the parity in clock asynchronous mode (UART).

bit6	Details
Writing "0"	Disables the parity.
Writing "1"	Enables the parity.

[bit5] TDP: Parity polarity control bit

This bit controls the even/odd parity.

bit5	Details
Writing "0"	Selects the even parity.
Writing "1"	Selects the odd parity.

[bit4] SBL: Stop bit length control bit

This bit controls the stop bit length in clock asynchronous mode (UART).

bit4	Details
Writing "0"	1 bit
Writing "1"	2 bits

Note:

The setting of this bit is only valid for transmission operation in clock asynchronous mode (UART). In a receive operation, regardless of the setting of this bit, the UART/SIO completes the receive operation when detecting a stop bit (one bit), and sets the receive data register full flag bit (SSRn:RDRF) to "1".

[bit3:2] CBL[1:0]: Character bit length control bits

These bits select the character bit length.

The setting of these bits is valid in both clock asynchronous mode (UART) and clock synchronous mode (SIO).

bit3:2	Details
Writing "00"	5 bits
Writing "01"	6 bits
Writing "10"	7 bits
Writing "11"	8 bits

[bit1] CKS: Clock select bit

This bit selects a serial clock from the external clock or the UART/SIO dedicated baud rate generator.

bit1	Details
Writing "0"	UART/SIO dedicated baud rate generator
Writing "1"	External clock

Note:

Setting this bit to "1" forcibly disables the output of the UCKn pin. The external clock cannot be used in clock asynchronous mode (UART).

[bit0] MD: Operation mode select bit

This bit selects an operation mode from the clock asynchronous mode (UART) or the clock synchronous mode (SIO).

bit0	Details
Writing "0"	Clock asynchronous mode (UART)
Writing "1"	Clock synchronous mode (SIO)

Note:

During data transmission or reception, do not modify the settings of the UART/SIO serial mode control register 1 ch. n (SMC1n).

22.7.2 UART/SIO Serial Mode Control Register 2 ch. n (SMC2n)

The UART/SIO serial mode control register 2 ch. n (SMC2n) controls the UART/SIO operation mode. The register enables or disables serial clock output, serial data output, transmission/reception, and interrupts, and clears the receive error flag.

Register Configuration

bit	7	6	5	4	3	2	1	0
Field	SCKE	TXOE	RERC	RXE	TXE	RIE	TCIE	TEIE
Attribute	R/W	R/W	R/W	R/W	R/W	R/W	R/W	R/W
Initial value	0	0	1	0	0	0	0	0

Register Functions

[bit7] SCKE: Serial clock output enable bit

This bit controls the input/output of the serial clock pin (UCKn) in clock synchronous mode (SIO).

bit7	Details
Writing "0"	Disables the serial clock, and makes the UCKn pin function as a general purpose I/O port.
Writing "1"	Enables the serial clock, and makes the UCKn pin function as a serial clock output pin.

Note:

With the clock select bit (SMC1n:CKS) already set to "1", no internal clock signal is output even when this bit set to "1".
In clock asynchronous mode (UART) (SMC1n:MD = 0), when this bit is set to "0", the output from the UCKn bit will always be "H".

[bit6] TXOE: Serial data output enable bit

This bit controls the output of the serial data pin (UOn).

bit6	Details
Writing "0"	Disables serial data output, and makes the UOn pin function as a general purpose I/O port.
Writing "1"	Enables serial data output, and makes the UOn pin function as a serial data output pin.

[bit5] RERC: Receive error flag clear bit

This bit clears the receive error flags.

The read value of this bit is always "1".

bit5	Details
Writing "0"	Clears the receive error flags (PER, OVE and FER) in the SSRn register.
Writing "1"	Has no effect on operation.

[bit4] RXE: Receive operation enable bit

This bit enables or disables the reception of serial data.

If this bit is set to "0" during a receive operation, the receive operation is immediately disabled and initialized. The data received up to that point is not transferred to the UART/SIO serial input data register.

bit4	Details
Writing "0"	Disables the reception of serial data.
Writing "1"	Enables the reception of serial data.

Note:

Setting this bit to "0" initializes the receive operation. It has no effect on the error flags (PER, OVE, FER, RDRF) in the SSRn register.

[bit3] TXE: Transmit operation enable bit

This bit enables or disables the transmission of serial data.

If this bit is set to "0" during a transmit operation, the transmit operation is immediately disabled and initialized. The transmission completion flag bit (SSRn:TCPL) is then be set to "1", and the transmit data register empty flag bit (SSRn:TDRE) is also be set to "1".

bit3	Details
Writing "0"	Disables the transmission of serial data.
Writing "1"	Enables the transmission of serial data.

[bit2] RIE: Receive interrupt enable bit

This bit enables or disables the receive interrupt.

With this bit set to "1" (receive interrupt enabled), a receive interrupt is generated immediately after either the receive data register full flag bit (SSRn:RDRF) or any of the receive error flag bits (SSRn:PER, OVE, FER) is set to "1".

bit2	Details
Writing "0"	Disables the receive interrupt.
Writing "1"	Enables the receive interrupt.

[bit1] TCIE: Transmission completion interrupt enable bit

This bit enables or disables the transmission completion interrupt.

With this bit set to "1" (transmission completion interrupt enabled), a transmission completion interrupt is generated immediately after the transmission completion flag bit (SSRn:TCPL) is set to "1".

bit1	Details
Writing "0"	Disables the transmission completion interrupt.
Writing "1"	Enables the transmission completion interrupt.

[bit0] TEIE: Transmit data register empty interrupt enable bit

This bit enables or disables the transmit data register empty interrupt.

With this bit set to "1" (transmit data register empty interrupt enabled), a transmit data register empty interrupt is generated immediately after the transmit data register empty flag bit (SSRn:TDRE) is set to "1".

bit0	Details
Writing "0"	Disables the transmit data register empty interrupt.
Writing "1"	Enables the transmit data register empty interrupt.

22.7.3 UART/SIO Serial Status and Data Register ch. n (SSRn)

The UART/SIO serial status and data register ch. n (SSRn) indicates the transmission/reception status and error status of the UART/SIO.

Register Configuration

bit	7	6	5	4	3	2	1	0
Field	—	—	PER	OVE	FER	RDRF	TCPL	TDRE
Attribute	—	—	R	R	R	R	R/W	R
Initial value	0	0	0	0	0	0	0	1

Register Functions

[bit7:6] Undefined bits

Their read values are always "0". Writing values to these bits has no effect on operation.

[bit5] PER: Parity error flag bit

This bit detects the parity error in receive data.

This bit is set to "1" when a parity error occurs during a receive operation reception. Writing "0" to the RERC bit in the SMC2n register clears this bit.

When a parity error is detected at the same time as clearing this bit by writing "0" to the RERC bit, setting this bit to "1" is given priority.

bit5	Details
Reading "0"	Indicates that no parity error has occurred.
Reading "1"	Indicates that a parity error has occurred.

[bit4] OVE: Overrun error flag bit

This bit detects the overrun error in receive data.

This bit is set to "1" when an overrun error occurs during a receive operation reception. Writing "0" to the RERC bit in the SMC2n register clears this bit.

When an overrun error is detected at the same time as clearing this bit by writing "0" to the RERC bit, setting this bit to "1" is given priority.

bit4	Details
Reading "0"	Indicates that no overrun error has occurred.
Reading "1"	Indicates that an overrun error has occurred.

[bit3] FER: Framing error flag bit

This bit detects the framing error in receive data.

This bit is set to "1" when a framing error occurs during a receive operation reception. Writing "0" to the RERC bit in the SMC2n register clears this bit.

When a framing error is detected at the same time as clearing this bit by writing "0" to the RERC bit, setting this bit to "1" is given priority.

bit3	Details
Reading "0"	Indicates that no framing error has occurred.
Reading "1"	Indicates that a framing error has occurred.

[bit2] RDRF: Receive data register full flag bit

This bit indicates the state of the UART/SIO serial input data register ch. n (RDRn).

When receive data is loaded to the RDRn register, this bit is set to "1".

When data in the RDRn register is read, this bit is cleared to "0".

bit2	Details
Reading "0"	Indicates that there is no receive data in the RDRn register.
Reading "1"	Indicates that there is receive data in the RDRn register.

[bit1] TCPL: Transmission completion flag bit

This bit indicates the data transmission state.

When serial transmission is completed, this bit is set to "1". However, when the UART/SIO serial output data register ch. n (TDRn) contains data to be transmitted successively, this bit is not set to "1" even after one time of transmission is completed.

Writing "0" to this bit clears it.

When transmission completion setting this bit to "1" and writing "0" to this bit to clear it occur simultaneously, the former one is given priority.

Writing "1" to this bit has no effect on operation.

bit1	Details
Reading "0"	Indicates that data transmission has not been completed.
Reading "1"	Indicates that data transmission has been completed.
Writing "0"	Clears this bit.
Writing "1"	Has no effect on operation.

[bit0] TDRE: Transmit data register empty flag bit

This bit indicates the state of the UART/SIO serial output data register ch. n (TDRn).

When transmit data is written to the TDRn register, this bit is set to "0".

When transmit data is loaded to the shift register for the transmission and data transmission starts, this bit is set to "1".

bit0	Details
Reading "0"	Indicates that there is transmit data in the TDRn register.
Reading "1"	Indicates that there is no transmit data in the TDRn register.

22.7.4 UART/SIO Serial Input Data Register ch. n (RDRn)

The UART/SIO serial input data register ch. n (RDRn) is used for inputting (receiving) serial data.

Register Configuration

bit	7	6	5	4	3	2	1	0
Field	RD7	RD6	RD5	RD4	RD3	RD2	RD1	RD0
Attribute	R	R	R	R	R	R	R	R
Initial value	0	0	0	0	0	0	0	0

Register Functions

This register stores received data. The serial data signals sent to the serial data input pin (UIn) is converted by the shift register and stored in this register.

When received data is set correctly in this register, the receive data register full flag bit (SSRn:RDRF) is set to "1". At this time, an interrupt occurs if receive interrupt requests have been enabled. If an RDRF bit check by the program or using an interruption shows that received data is stored in this register, the reading of the content for this register clears the RDRF bit to "0".

When the character bit length (SMC1n:CBL[1:0]) is set to shorter than eight bits, the excess upper bits (beyond the set bit length) are set to "0".

22.7.5 UART/SIO Serial Output Data Register ch. n (TDRn)

The UART/SIO serial output data register ch. n (TDRn) used for outputting (transmitting) serial data.

Register Configuration

bit	7	6	5	4	3	2	1	0
Field	TD7	TD6	TD5	TD4	TD3	TD2	TD1	TD0
Attribute	R/W	R/W	R/W	R/W	R/W	R/W	R/W	R/W
Initial value	0	0	0	0	0	0	0	0

Register Functions

This register holds data to be transmitted. The register accepts a write when the transmit data register empty flag bit (TDRE) is "1". An attempt to write to the bit is ignored when the bit contains "0".

When transmit data is written to the UART/SIO serial output data register ch. n (TDRn), the TDRE bit is set to "0". Upon completion of transfer of transmit data to the transmission shift register, the TDRE bit is set to "1", enabling the next transmit data to be written to the TDRn register. At this time, an interrupt occurs if transmit data register empty interrupts have been enabled. Write the next piece of transmit data when transmit data empty occurs or the TDRE bit is set to "1".

When the character bit length (SMC1n:CBL[1:0]) is set to shorter than eight bits, the excess upper bits (beyond the set bit length) are ignored.

Note:

The data in this register cannot be updated when the TDRE bit in UART/SIO serial status and data register ch.n (SSRn) is "0".

When this register is updated at writing complete the transmission data and TDRE = 0 (regardless of the setting of the TXE bit in the SMC2n register), the transmission operation is initialized by writing "0" to TXE, the TDRE bit becomes "1", and updating this register is enabled.

Moreover, when "0" is written to the TXE bit without transmission having started (when the transmit data is written to the TDRn register, and the TXE bit has not been set to "1" yet), the TCPL bit is not set to "1". In the case of modifying the transmit data, make the TDRE bit become "1" once by writing "0" to the TXE bit before modifying the transmit data.

23. UART/SIO Dedicated Baud Rate Generator

This chapter describes the functions and operations of the dedicated baud rate generator for the UART/SIO.

23.1 Overview

23.2 Channel

23.3 Operations

23.4 Registers

23.1 Overview

The UART/SIO dedicated baud rate generator generates the baud rate for the UART/SIO.
The generator consists of the UART/SIO dedicated baud rate generator prescaler select register ch. n (PSSRn) and UART/SIO dedicated baud rate generator baud rate setting register ch. n (BRSRn).

The number of pins and that of channels of the UART/SIO dedicated baud rate generator vary among products. For details, refer to the device data sheet.

In this chapter, "n" in a pin name and a register abbreviation represents the channel number. For details of pin names, register names and register abbreviations of a product, refer to the device data sheet.

23.1.1 Block Diagram of UART/SIO Dedicated Baud Rate Generator

Figure 23-1. Block Diagram of UART/SIO Dedicated Baud Rate Generator

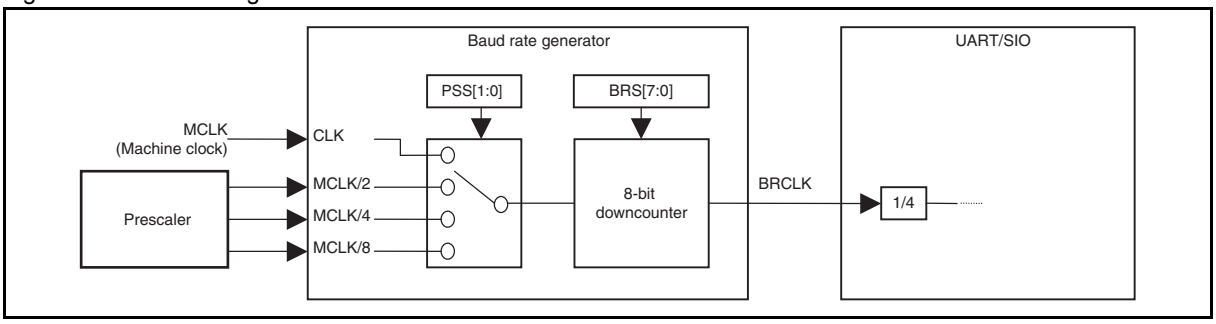

23.1.2 Input Clock

The UART/SIO dedicated baud rate generator uses the output clock from the prescaler or the machine clock as its input clock.

23.1.3 Output Clock

The UART/SIO dedicated baud rate generator supplies its clock to the UART/SIO.

23.2 Channel

This section describes the channel of the UART/SIO dedicated baud rate generator.

23.2.1 Channel of UART/SIO Dedicated Baud Rate Generator

Table 23-1 shows the registers of the UART/SIO dedicated baud rate generator.

Table 23-1. Registers of Dedicated Baud Rate Generator

Register abbreviation	Corresponding register (Name in this manual)
PSSRn	UART/SIO dedicated baud rate generator prescaler select register ch. n
BRSRn	UART/SIO dedicated baud rate generator baud rate setting register ch. n

23.3 Operations

The UART/SIO dedicated baud rate generator serves as the baud rate generator in clock asynchronous mode (UART).

23.3.1 Baud Rate Setting

The CKS bit in the SMC1n register of the UART/SIO is used to select the serial clock. This selects the UART/SIO dedicated baud rate generator.

In asynchronous clock mode, the shift clock that is selected by the CKS bit and divided by four is used and transfers can be performed within the range from −3% to +3%. The baud rate calculation formula for the UART/SIO dedicated baud rate generator is shown below.

Figure 23-2. Baud Rate Calculation Formula when UART/SIO Dedicated Baud Rate Generator Is Used

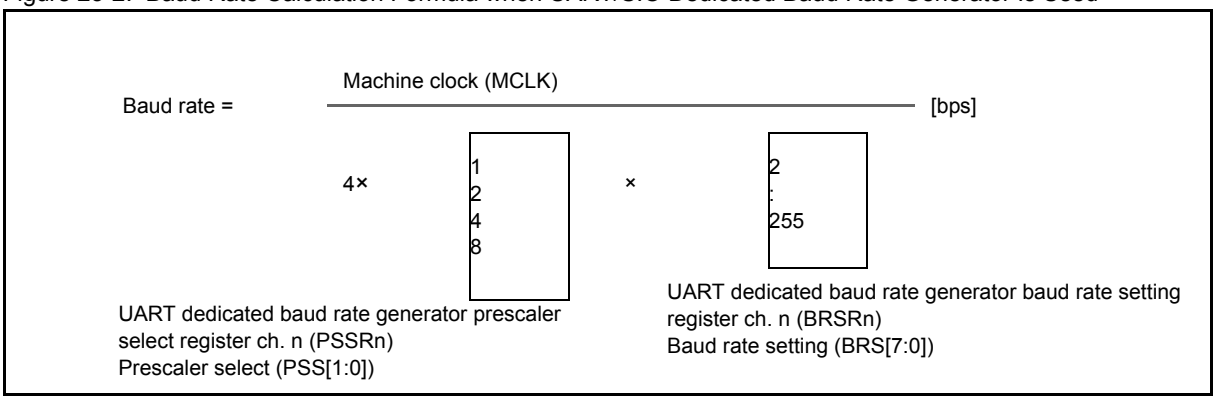

Table 23-2. Sample Asynchronous Transfer Rates by Baud Rate Generator (Machine Clock = 10 MHz, 16 MHz, 16.25 MHz)

UART/SIO dedicated baud rate generator setting		UART internal division	Total division ratio (PSS × BRS × 4)	Baud rate (10 MHz / Total division ratio)	Baud rate (16 MHz / Total division ratio)	Baud rate (16.25 MHz / Total division ratio)
Prescaler select PSS[1:0]	Baud rate counter setting BRS [7:0]					
1 (Setting value: 0, 0)	20	4	80	125000	200000	203125
1 (Setting value: 0, 0)	22	4	88	113636	181818	184659
1 (Setting value: 0, 0)	44	4	176	56818	90909	92330
1 (Setting value: 0, 0)	87	4	348	28736	45977	46695
1 (Setting value: 0, 0)	130	4	520	19231	30769	31250
2 (Setting value: 0, 1)	130	4	1040	9615	15385	15625
4 (Setting value: 1, 0)	130	4	2080	4808	7692	7813

Table 23-2. Sample Asynchronous Transfer Rates by Baud Rate Generator (Machine Clock = 10 MHz, 16 MHz, 16.25 MHz)

UART/SIO dedicated baud rate generator setting		UART internal division	Total division ratio (PSS × BRS × 4)	Baud rate (10 MHz / Total division ratio)	Baud rate (16 MHz / Total division ratio)	Baud rate (16.25 MHz / Total division ratio)
Prescaler select PSS[1:0]	Baud rate counter setting BRS [7:0]					
8 (Setting value: 1, 1)	130	4	4160	2404	3846	3906

The baud rate can be set in UART mode within the following range.

Table 23-3. Baud Rate Setting Range in Clock Asynchronous Mode (UART)

PSS[1:0]	BRS[7:0]
0b00 to 0b11	0x02 (2) to 0xFF (255)

23.4 Registers

This section describes the registers of the UART/SIO dedicated baud rate generator.

Table 23-4. List of UART/SIO Baud Rate Generator Registers

Register abbreviation	Register name	Reference
PSSRn	UART/SIO dedicated baud rate generator prescaler select register ch. n	23.4.1
BRSRn	UART/SIO dedicated baud rate generator baud rate setting register ch. n	23.4.2

23.4.1 UART/SIO Dedicated Baud Rate Generator Prescaler Select Register ch. n (PSSRn)

The UART/SIO dedicated baud rate generator prescaler select register ch. n (PSSRn) controls the output of the baud rate clock and the prescaler.

Register Configuration

bit	7	6	5	4	3	2	1	0
Field	—	—	—	—	—	BRGE	PSS1	PSS0
Attribute	—	—	—	—	—	R/W	R/W	R/W
Initial value	0	0	0	0	0	0	0	0

Register Functions

[bit7:3] Undefined bits

Their read values are always "0". Writing values to these bits has no effect on operation.

[bit2] BRGE: Baud rate clock output enable bit

This bit enables or disables outputting the baud rate clock "BRCLK".

When "1" is written to this bit, the value of the BRS[7:0] bits in the BRSRn register is loaded to the 8-bit downcounter and BRCLK to be supplied to the UART/SIO is output.

Writing "0" to this bit stops the output of BRCLK.

bit2	Details
Writing "0"	Disables outputting the baud rate clock.
Writing "1"	Enables outputting the baud rate clock.

[bit1:0] PSS[1:0]: Prescaler select bits

These bits select a prescaler.

bit1:0	Details
Writing "00"	1
Writing "01"	1/2
Writing "10"	1/4
Writing "11"	1/8

23.4.2 UART/SIO Dedicated Baud Rate Generator Baud Rate Setting Register ch. n (BRSRn)

The UART/SIO dedicated baud rate generator baud rate setting register ch.n (BRSRn) controls the baud rate settings.

Register Configuration

bit	7	6	5	4	3	2	1	0
Field	BRS7	BRS6	BRS5	BRS4	BRS3	BRS2	BRS1	BRS0
Attribute	R/W	R/W	R/W	R/W	R/W	R/W	R/W	R/W
Initial value	0	0	0	0	0	0	0	0

Register Functions

This register sets the cycle of the 8-bit downcounter and can be used to set any baud rate clock (BRCLK). Stop the UART/SIO operation before writing a value to this register.

In clock asynchronous mode (UART), do not set BRS[7:0] to "0x00" or "0x01".

24. I²C Bus Interface

This chapter describes functions and operations of the I²C bus interface.

24.1 Overview

24.2 Configuration

24.3 Channel

24.4 Pins

24.5 Interrupts

24.6 Operations and Setting Procedure Example

24.7 Registers

24.8 Notes on Using I²C Bus Interface

24.1 Overview

The interface provides the functions of transmission and reception in master and slave modes, detection of arbitration lost, detection of slave address and general call address, generation and detection of start and stop conditions, bus error detection, and MCU standby wakeup.

24.1.1 I²C Bus Interface Functions

The I²C bus interface is a two-wire, bi-directional bus consisting of a serial data line (SDAn) and serial clock line (SCLn). The devices connected to the bus via these two wires can exchange data, and each device can operate as a sender or receiver in accordance with their respective functions based on the unique address assigned to each device. Furthermore, the interface establishes a master/slave relationship between devices.

The I²C bus interface can connect multiple devices provided the bus capacitance does not exceed an upper limit of 400 pF. The I²C bus interface is a true multi-master bus with collision detection and a communication control protocol that prevent loss of data even if more than one master attempts to start a data transfer at the same time.

The communication control protocol ensures that only one master is able to take control of the bus at a time, even if multiple masters attempt to take control of the bus simultaneously, without messages being lost or data being altered. Multi-master means that more than one master can attempt to take control of the bus at the same time without causing messages to be lost.

The I²C bus interface includes a function to wake up the MCU from standby mode.

Figure 24-1. Example of I2C Bus Interface Configuration

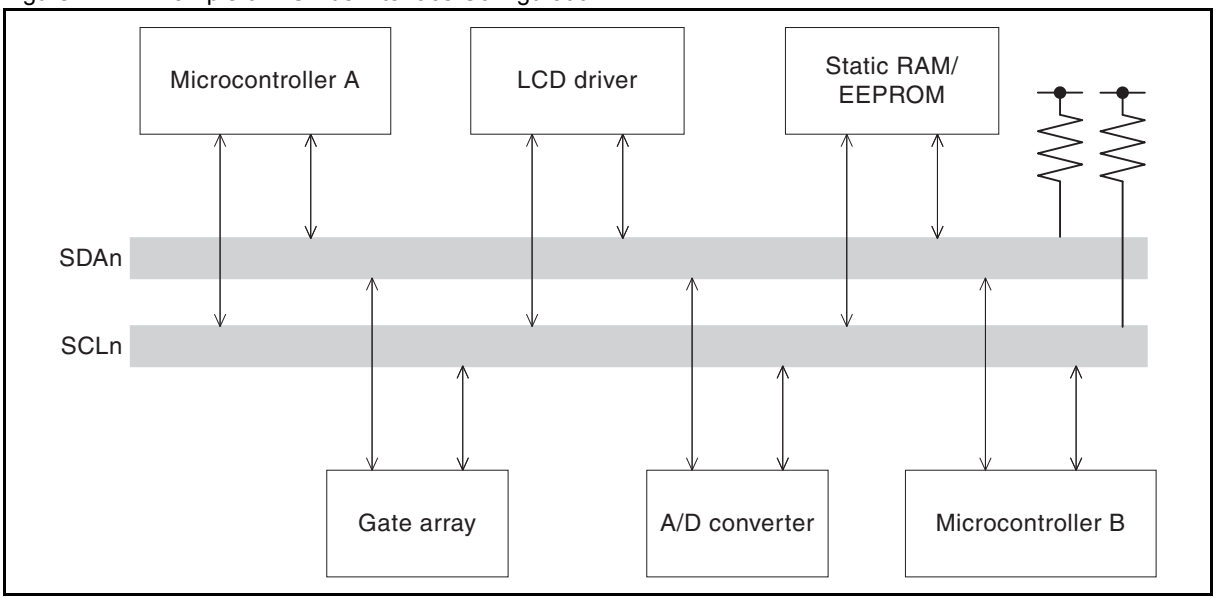

24.2 Configuration

The I2C bus interface consists of the following blocks:

- Clock selector
- Clock divider
- Shift clock generator
- Start/stop condition generation circuit
- Start/stop condition detection circuit
- Arbitration lost detection circuit
- Slave address comparison circuit
- IBSRn register
- IBCR0n register
- IBCR1n register
- ICCRn register
- IAARn register
- IDDRn register

The number of pins and that of channels of the I2C bus interface vary among products. For details, refer to the device data sheet.

In this chapter, "n" in a pin name and a register abbreviation represents the channel number. For details of pin names, register names and register abbreviations of a product, refer to the device data sheet.

24.2.1 Block Diagram of I²C Bus Interface

Figure 24-2. Block Diagram of I²C Bus Interface

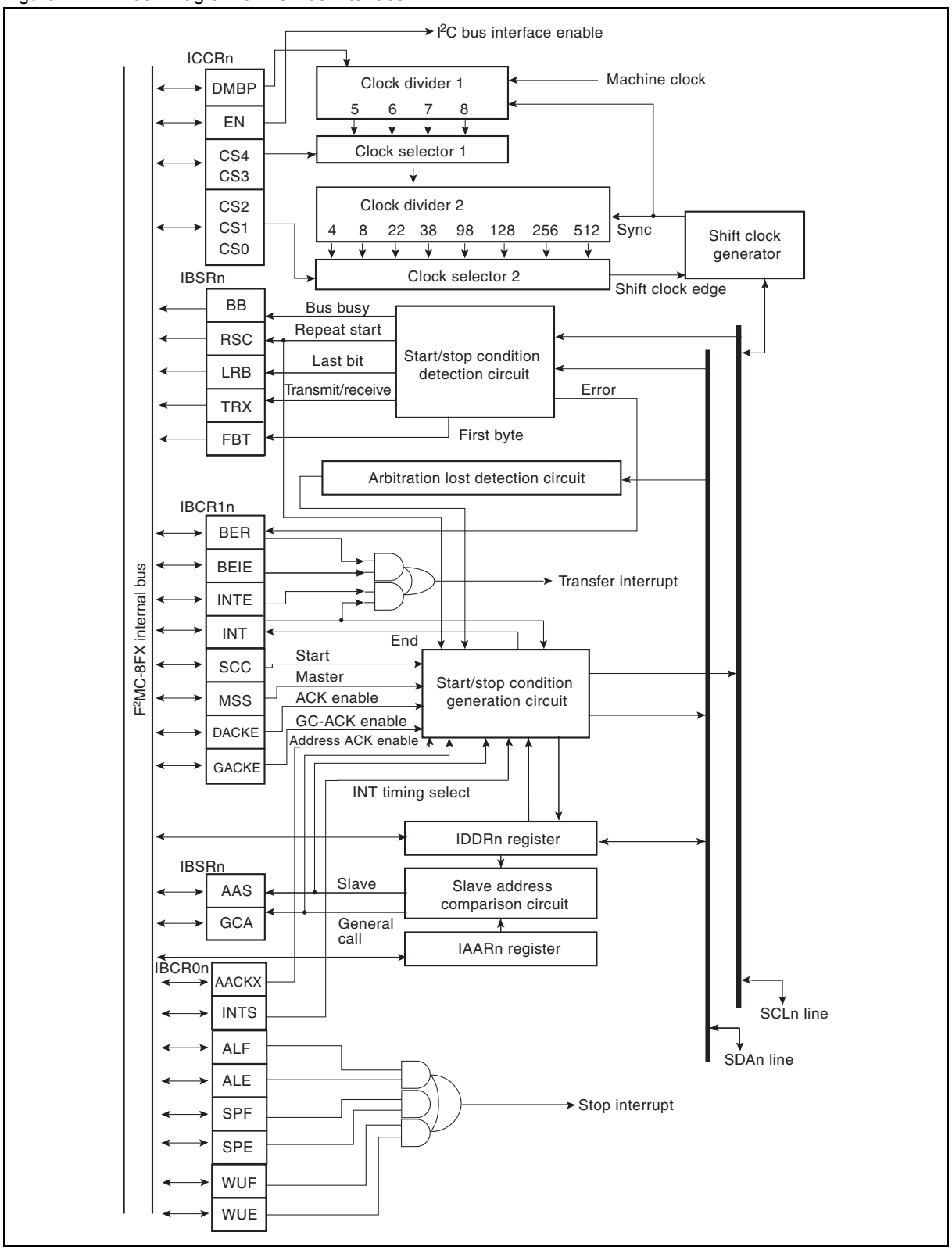

- Clock selector, clock divider, and shift clock generator
  This circuit uses the machine clock to generate the shift clock for the I^2C bus.
- Start/stop condition generation circuit
  When a start condition is transmitted with the bus idle (SCLn and SDAn at the "H" level), a master starts communications. When SCLn = "H", a start condition is generated by changing the SDAn line from "H" to "L". The master can terminate its communication by generating a stop condition. When SCLn = "H", a stop condition is generated by changing the SDAn line from "L" to "H".
- Start/stop condition detection circuit
  This circuit detects a start/stop condition for data transfer.
- Arbitration lost detection circuit
  This interface circuit supports multi-master systems. If two or more masters attempt to transmit at the same time, the arbitration lost condition (if logic level "1" is sent when the SDAn line goes to the "L" level) occurs. When the arbitration lost is detected, IBCR0n:ALF is set to "1" and the master changes to a slave automatically.
- Slave address comparison circuit
  The slave address comparison circuit receives the slave address after the start condition to compare it with its own slave address. The address is seven-bit data followed by a data direction (R/W) bit in the eighth bit position. If the received address matches the own slave address, the comparison circuit transmits an acknowledgment.
- IBSRn register
  The IBSRn register shows the status of the I^2C bus interface.
- IBCR0n register and IBCR1n register
  The IBCR0n register and the IBCR1n register are used to select the operating mode and to enable or disable interrupts, acknowledgment, general call acknowledgment, and the function to wake up the MCU from standby mode.
- ICCRn register
  The ICCRn register is used to enable I^2C bus interface operations and select the shift clock frequency.
- IAARn register
  The IAARn register is used to set the slave address.
- IDDRn register
  The IDDRn register holds the transmit or receive shift data or address. When transmitted, the data or address written to this register is transferred from the MSB first to the bus.

24.2.2 Input Clock

The I^2C bus interface uses the machine clock as the input clock (shift clock).

24.3 Channel

This section describes the channel of the I²C bus interface.

24.3.1 Channel of I²C Bus Interface

Table 24-1 and Table 24-2 show the pins and registers on a channel of the I²C bus interface respectively.

Table 24-1. Pins of I²C Bus Interface

Pin name	Pin function
SDAn	I²C bus interface I/O
SCLn	

Table 24-2. Registers of I²C Bus Interface

Register abbreviation	Corresponding register (Name in this manual)
IBCR0n	I²C bus control register 0 ch. n
IBCR1n	I²C bus control register 1 ch. n
IBSRn	I²C bus status register ch. n
IDDRn	I²C data register ch. n
IAARn	I²C address register ch. n
ICCRn	I²C clock control register ch. n

24.4 Pins

This section describes the pins of the I²C bus interface and gives their block diagram.

24.4.1 Pins of I²C Bus Interface

The pins of the I²C bus interface are SDAn and SCLn.

- SDAn pin

The SDAn pin is the data I/O pin of the I²C bus interface.

When the I²C bus interface is enabled (ICCRn:EN = 1), the SDAn pin is automatically set as a data I/O pin to function as the SDAn pin.

- SCLn pin

The SCLn pin is the serial clock I/O pin of the I²C bus interface.

When the I²C bus interface is enabled (ICCRn:EN = 1), the SCLn pin is automatically set as a shift clock I/O pin to function as the SCLn pin.

24.5 Interrupts

The I^{2}C bus interface has a transfer interrupt and a stop interrupt which are triggered by the following events.

- Transfer interrupt
  A transfer interrupt occurs either upon completion of data transfer or when a bus error occurs.
- Stop interrupt
  A stop interrupt occurs upon detection of a stop condition or arbitration lost or upon access to the I^{2}C bus interface in stop/watch mode.

24.5.1 Transfer Interrupt

Table 24-3 shows the transfer interrupt control bits and I^{2}C bus interface interrupt sources.

Table 24-3. Transfer Interrupt Control Bits and I^{2}C Bus Interface Interrupt Sources

Item	End of transfer	Bus error
Interrupt request flag bit	IBCR1n:INT =1	IBCR1n:BER =1
Interrupt request enable bit	IBCR1n:INTE =1	IBCR1n:BEIE =1
Interrupt source	Data transfer complete	Bus error occurred

- Interrupt upon completion of transfer
  An interrupt request is output to the CPU upon completion of data transfer if the transfer completion interrupt request enable bit has been set to enable (IBCR1n:INTE = 1). In the interrupt service routine, write "0" to the transfer completion interrupt request flag bit (IBCR1n:INT) to clear the interrupt request. When data transfer is completed, the IBCR1n:INT bit is set to "1" regardless of the value of the IBCR1n:INTE bit.
- Interrupt in response to a bus error
  When the following conditions are met, a bus error is deemed to have occurred, and the I^{2}C bus interface will be stopped.
  - When a stop condition is detected in master mode.
  - When a start or stop condition is detected during transmission or reception of the first byte.
  - When a start or stop condition is detected during transmission or reception of data (excluding the start, first data, and stop bits).

In these cases, an interrupt request is output to the CPU if the bus error interrupt request enable bit has been set to enable (IBCR1n:BEIE = 1). In the interrupt service routine, write "0" to the bus error interrupt request flag bit (IBCR1n:BER) to clear the interrupt request. When a bus error occurs, the IBCR1n:BER bit is set to "1" regardless of the value of the IBCR1n:BEIE bit.

24.5.2 Stop Interrupt

Table 24-4 shows the stop interrupt control bits and I²C interrupt sources (trigger events).

Table 24-4. Stop Interrupt Control Bits and I²C Interrupt Sources

Item	Detection of stop condition	Detection of arbitration lost	MCU wakeup from stop/watch mode
Interrupt request flag bit	IBCR0n:SPF =1	IBCR0n:ALF =1	IBCR0n:WUF =1
Interrupt request enable bit	IBCR0n:SPE =1	IBCR0n:ALE =1	IBCR0n:WUE =1
Interrupt source	Stop condition detected	Arbitration lost detected	Start condition detected

- Interrupt upon detection of a stop condition
  A stop condition is considered to be valid if all of the following conditions are satisfied when the stop condition is detected.
  - The bus is busy (state which the start condition is detected).
  - IBCR1n:MSS = 0
  - After transfer of one byte of data completes, including the acknowledgment.

In this case, an interrupt request is output to the CPU if the stop condition detection interrupt request enable bit has been set to enable (IBCR0n:SPE =1). In the interrupt service routine, write "0" to the IBCR0n:SPF bit to clear the interrupt request.

The IBCR0n:SPF bit is set to "1" when a valid stop condition occurs regardless of the value of the IBCR0n:SPE bit.

- Interrupt upon detection of arbitration lost
  When arbitration lost is detected, an interrupt request is output to the CPU if the arbitration lost detection interrupt request enable bit has been set to enable (IBCR0n:ALE = 1). Either write "0" to the arbitration lost interrupt request flag bit (IBCR0n:ALF) while the bus is idle or write "0" to the IBCR1n:INT bit from the interrupt service routine while the bus is busy to clear the interrupt request.
  When arbitration lost occurs, the IBCR0n:ALF bit is set to "1" regardless of the value for the IBCR0n:ALE bit.
- Interrupt for MCU wakeup from stop mode or watch mode
  When a start condition is detected, an interrupt request is output to the CPU if the function to wake up the MCU from stop or watch mode has been enabled (IBCR0n:WUE = 1).
  In the interrupt service routine, write "0" to the MCU standby mode wakeup interrupt request flag bit (IBCR0n:WUF) to clear the interrupt request.

24.6 Operations and Setting Procedure Example

This section describes the operations of the I^{2}C bus interface.

Operations of I^{2}C Bus Interface

- I^{2}C bus interface

The I^{2}C bus interface is an 8-bit serial interface synchronized with a shift clock.

- MCU standby mode wakeup function

The wakeup function wakes up the MCU upon detection of a start condition, from low power consumption mode such as stop or watch mode.

Setting Procedure Example

Below is an example of procedure for setting the I^{2}C bus interface.

- Initial settings

1. Set the port for input. (DDR)
2. Set the interrupt level. (ILR*)
3. Set the slave address. (IAARn)
4. Select the clock and enable I^{2}C operation. (ICCRn)
5. Enable bus error interrupt requests. (IBCR1n:BEIE = 1)

*: For details of the interrupt level setting register (ILR), refer to Chapter 5.Interrupts in this hardware manual and "Interrupt Source Table" in the device data sheet.

- Interrupt processing

1. Execute any process.
2. Clear the bus error interrupt request flag. (IBCR1n:BER = 0)

24.6.1 I²C Bus Interface

The I²C bus interface is an eight-bit serial interface synchronized with the shift clock.

24.6.1.1 I²C System

The I²C bus system uses the serial data line (SDAn) and serial clock line (SCLn) for data transfers. All the devices connected to the bus require open drain or open collector outputs which must be connected with a pull-up resistor.

Each of the devices connected to the bus has a unique address which can be set up using software. The devices always operate in a simple master/slave relationship, where the master functions as the master transmitter or master receiver. The I²C bus interface is a true multi-master bus with a collision detection function and arbitration function to prevent data from being lost if more than one master attempts to start data transfer at the same time.

24.6.1.2 I²C Protocol

Figure 24-3 shows the format required for data transfer.

Figure 24-3. Data Transfer Example

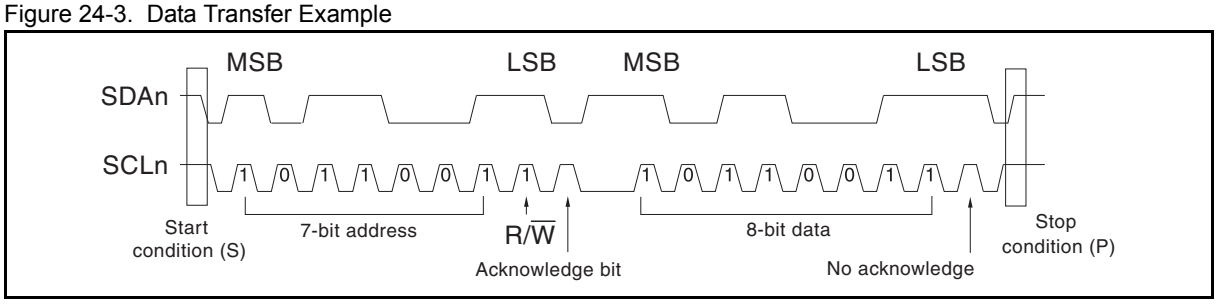

The slave address is transmitted after a start condition (S) is generated. This address is seven bits long followed by the data direction bit (R/$\overline{W}$) in the eighth bit position. Data is transmitted after the address. The data is eight bits followed by an acknowledgment.

Data can be transmitted continuously to the same slave address in consecutive units of eight bits plus acknowledgment.

Data transfer is always ended in the master stop condition (P). However, the repeated start condition (S) can be used to transmit the address which indicates a different slave without generating a stop condition.

24.6.1.3 Start Conditions

While the bus is idle (SCLn and SDAn are both at the logical "H" level), the master generates a start condition to start transmission. As shown in Figure 24-3., a start condition is triggered when the SDAn line is changed from "H" to "L" while SCLn = "H". This starts a new data transfer and commences master/slave operation.

A start condition can be generated in either of the following two ways.

- By writing "1" to the IBCR1n:MSS bit while the I²C bus is not in use (IBCR1n:MSS = 0, IBSRn:BB = 0, IBCR1n:INT = 0, and IBCR0n:ALF = 0). (Next, IBSRn:BB is set to "1" to indicate that the bus is busy.)
- By writing "1" to the IBCR1n:SCC bit during an interrupt while in master mode (IBCR1n:MSS = 1, IBSRn:BB = 1, IBCR1n:INT = 1, and IBCR0n:ALF = 0). (This generates a repeated START condition.)

Writing "1" to the IBCR1n:MSS or IBCR1n:SCC bit is ignored in other than the above cases. If another system is using the bus when "1" is written to the IBCR1n:MSS bit, the IBCR0n:ALF bit is set to "1".

24.6.1.4 Addressing

- Slave addressing in master mode

In master mode, IBSRn:BB and IBSRn:TRX are set to "1" after the start condition is generated, and the slave address in the IDDRn register is output to the bus starting with the MSB. The address data consists of eight bits: the 7-bit slave address and the data transfer direction R/$\overline{W}$ bit (bit0 in the IDDRn register).

The acknowledgment from the slave is received after the address data is sent. SDAn goes to "L" in the ninth clock cycle and the acknowledge bit from the receiving device is received (See Figure 24-3.). In this case, the R/$\overline{W}$ bit (IDDRn:bit0) is inverted logically and stored in the IBSRn:TRX bit as "1" if the SDAn level is "L".

- Addressing in slave mode

In slave mode, after the start condition is detected, IBSRn:BB is set to "1" and IBSRn:TRX is set to "0", and the data received from the master is stored in the IDDRn register. After the address data is received, the IDDRn and IAARn registers are compared. If the addresses match, IBSRn:AAS is set to "1" and an acknowledgment is sent to the master. Next, bit0 in the receive data (bit0 in the IDDRn register) is saved in the IBSRn:TRX bit.

24.6.1.5 Data Transfer

If the MCU is addressed as a slave, data can be sent or received byte by byte with the direction determined by the R/$\overline{W}$ bit sent by the master.

Each byte to be output on the SDAn line is fixed at eight bits. As shown in Figure 24-3, the receiver sends an acknowledgment to the sender by forcing the SDAn line to the stable "L" level while the acknowledge clock pulse is "H". Data is transferred at one clock pulse per bit with MSB at the head. Sending and receiving an acknowledgment is required after each byte is transferred. Accordingly, nine clock pulses are required to transfer one complete data byte.

24.6.1.6 Acknowledgment

An acknowledgment is sent by the receiver in the ninth clock cycle for data byte transfer by the sender based on the following conditions.

An address acknowledgment is generated in the following cases.

- The received address matches the address set in IAARn, and the address acknowledgment is output automatically (IBCR0n:AACKX = 0).
- A general call address (0x00) is received and the general call address acknowledgment output is enabled (IBCR1n:GACKE = 1).

A data acknowledge bit used when data is received can be enabled or disabled by the IBCR1n:DACKE bit. In master mode, a data acknowledgment is generated if IBCR1n:DACKE = 1. In slave mode, a data acknowledgment is generated if an address acknowledgment has already been generated and IBCR1n:DACKE = 1. The received acknowledgment is saved in IBSRn:LRB in the ninth SCLn cycle.

- If the data ACK depends on the content of received data (such as packet error checking used by the SM bus), control the data ACK by setting the data ACK enable bit (IBCR1n:DACKE) after writing "1" to the IBCR0n:INTS bit (for example, by a previous transfer completion interrupt) so that the latest received data can be read.
- The latest data ACK (IBSRn:LRB) can be read after the ACK has been received (IBSRn:LRB must be read during the transfer completion interrupt triggered by the ninth SCLn cycle). Accordingly, if ACK is read when the IBCR0n:INTS bit is "1", you must write "0" to this bit in the transfer completion interrupt triggered by the eighth SCLn cycle so that another transfer completion interrupt will be triggered by the ninth SCLn cycle.

24.6.1.7 General Call Address

A general call address consists of the start address byte (0x00) and the second address byte that follows. To use a general call address, you must set IBCR1n:GACKE=1 before the acknowledge of the first byte general call address. In addition, the acknowledgment for the second address byte can be controlled as shown below.

Figure 24-4. General Call Operation

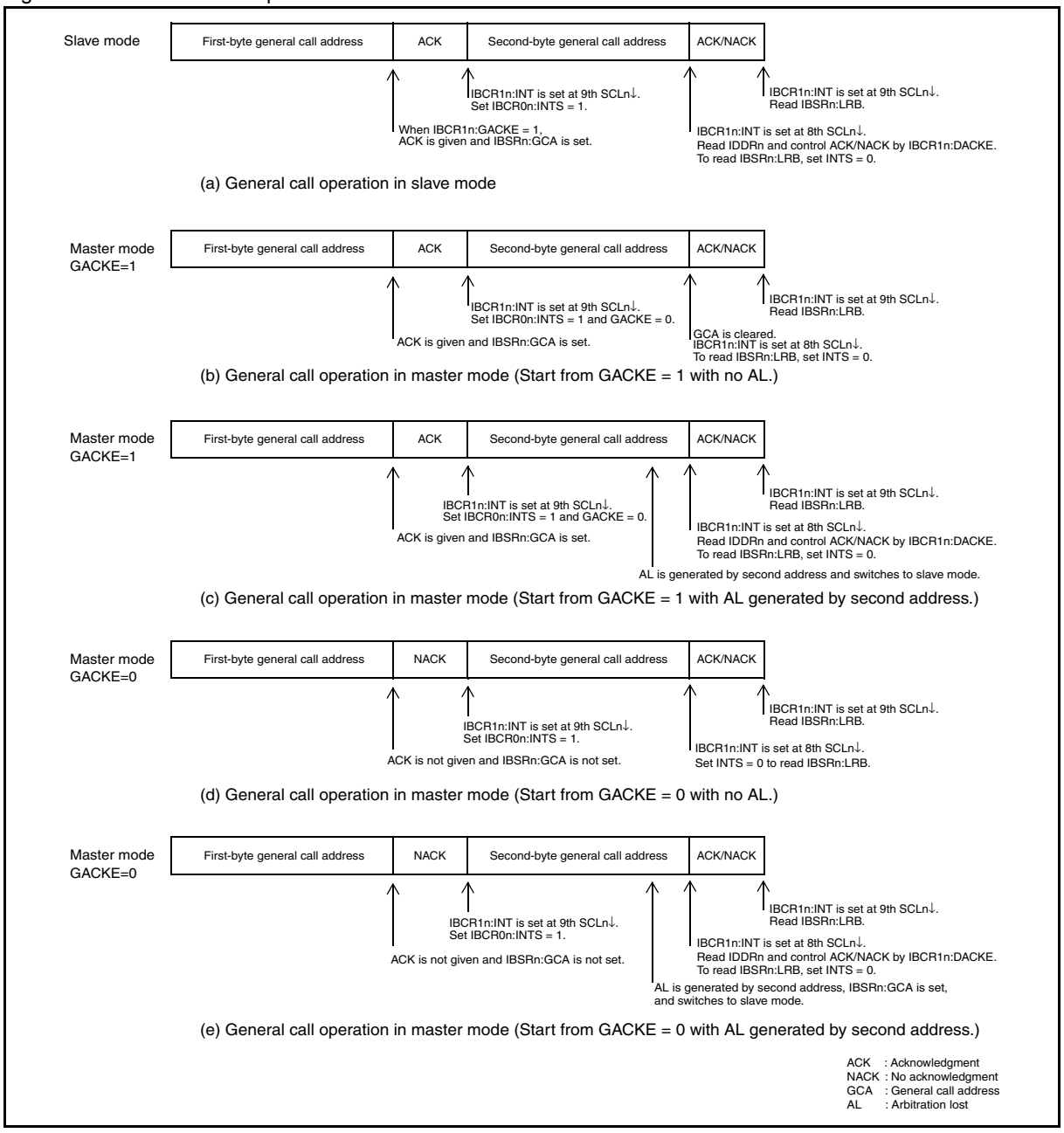

If this module sends a general call address at the same time as another device, you can determine whether the module successfully seized control of the bus by checking whether arbitration lost was detected when the second address byte was transferred. If arbitration lost was detected, the module goes to slave mode and continues to receive data from the master.

24.6.1.8 Stop Condition

The master can release the bus and end communications by generating a stop condition. Changing the SDAn line from "L" to "H" while SCLn is "H" generates a stop condition. This signals to the other devices on the bus that the master has finished communications (referred to below as "bus free"). However, the master can continue to generate start conditions without generating a stop condition. This is called a repeated start condition.

Writing "0" to the IBCR1n:MSS bit during an interrupt while in master mode (IBCR1n:MSS = 1, IBSRn:BB = 1, IBCR1n:INT = 1, and IBCR0n:ALF = 0) generates a stop condition and changes to slave mode. In other cases, writing "0" to the IBCR1n:MSS bit is ignored.

24.6.1.9 Arbitration

The interface circuit is a true multi-master bus able to connect multiple master devices. Arbitration occurs when another master within the system simultaneously transfers data during a master transfer.

Arbitration occurs on the SDAn line while the SCLn line is at the "H" level. When the send data is "1" and the data on the SDAn line is "L" at the master, this is treated as arbitration lost. In this case, data output is halted and IBCR0n:ALF is set to "1". If this occurs, an interrupt is generated if arbitration lost interrupts have been enabled (IBCR0n:ALE = 1). If IBCR0n:ALF is set to "1", the module sets IBCR1n:MSS = 0 and IBSRn:TRX = 0, clears TRX, and goes to slave receive mode.

If IBCR0n:ALF is set to "1" when IBSRn:BB = 0, IBCR0n:ALF is cleared only by writing "0". If IBCR0n:ALF is set to "1" when IBSRn:BB = 1, IBCR0n:ALF is cleared only by clearing IBCR1n:INT to "0".

Conditions for generating an arbitration lost interrupt when IBSRn:BB = 0

When a start condition is generated by the program (by setting the IBCR1n:MSS bit to "1") at the timing shown in Figure 24-5 or Figure 24-6, interrupt generation (IBCR1n:INT = 1) is prohibited by arbitration lost detection (IBCR0n:ALF = 1).

- Conditions (1) in which no interrupt is generated due to arbitration lost

If the program triggers a start condition (by setting the IBCR1n:MSS bit to "1") when no start condition has been detected (IBSRn:BB = 0) and the SDAn and SCLn line pins are at the "L" level.

Figure 24-5. Timing Diagram with No Interrupt Generated with IBCR0n:ALF = 1

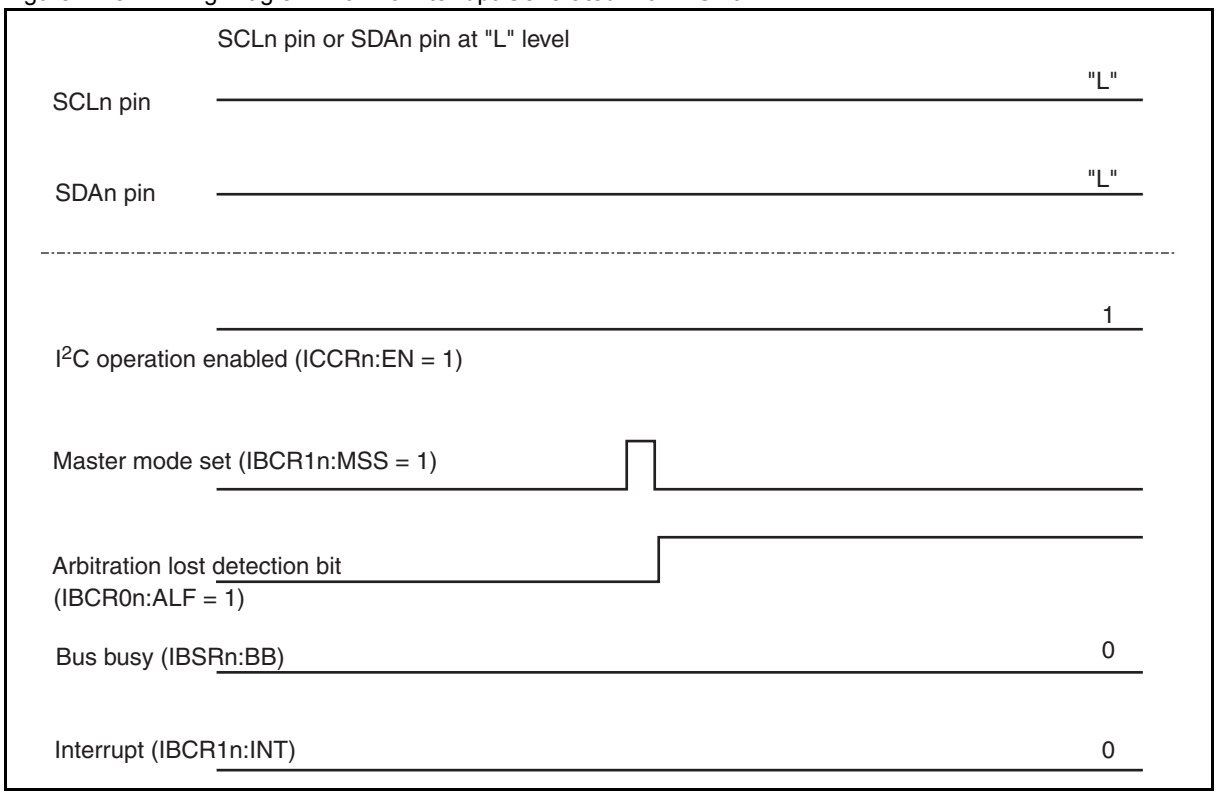

- Conditions (2) in which no interrupt is generated due to arbitration lost

If the program enables I^2C bus interface operation (by setting the ICCRn:EN bit to "1") and triggers a start condition (by setting the IBCR1n:MSS bit to "1") when the I^2C bus is in use by another master.

This is because, as shown in Figure 24-6, this I^2C bus interface cannot detect the start condition (IBSRn:BB = 0) if another master starts communications on the I^2C bus when the operation of this I^2C bus interface has been disabled (ICCRn:EN = 0).

Figure 24-6. Timing Diagram with No Interrupt Generated with IBCR0n:ALF = 1

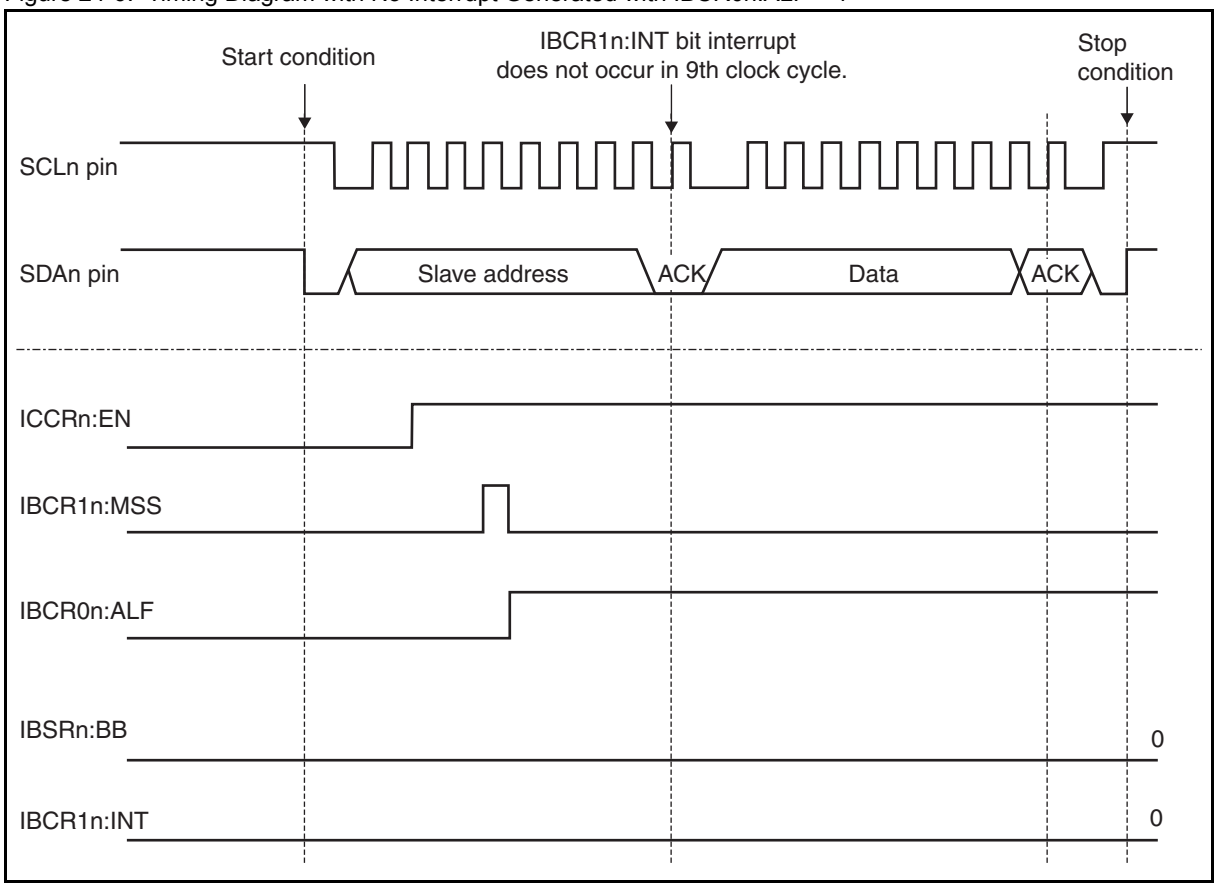

If this situation can occur, use the following procedure to set up the module from the software.

1. Trigger a start condition from the program (by setting the IBCR1n:MSS bit to "1").
2. Check the IBCR0n:ALF and IBSRn:BB bits in the arbitration lost interrupt.
   If IBCR0n:ALF = 1 and IBSRn:BB = 0, clear the IBCR0n:ALF bit to "0".
   If IBCR0n:ALF = 1 and IBSRn:BB = 1, clear the IBCR0n:ALE bit to "0" and perform control as normal. (Normal control means writing "0" to the IBCR1n:INT bit in the INT interrupt to clear IBCR0n:ALF to "0".)
   In other cases, perform control as normal (Normal control means writing "0" to the IBCR1n:INT bit in the INT interrupt to clear IBCR0n:ALF.)

The following sample flow chart illustrates the procedure:

Figure 24-7. Sample Flow Chart 1

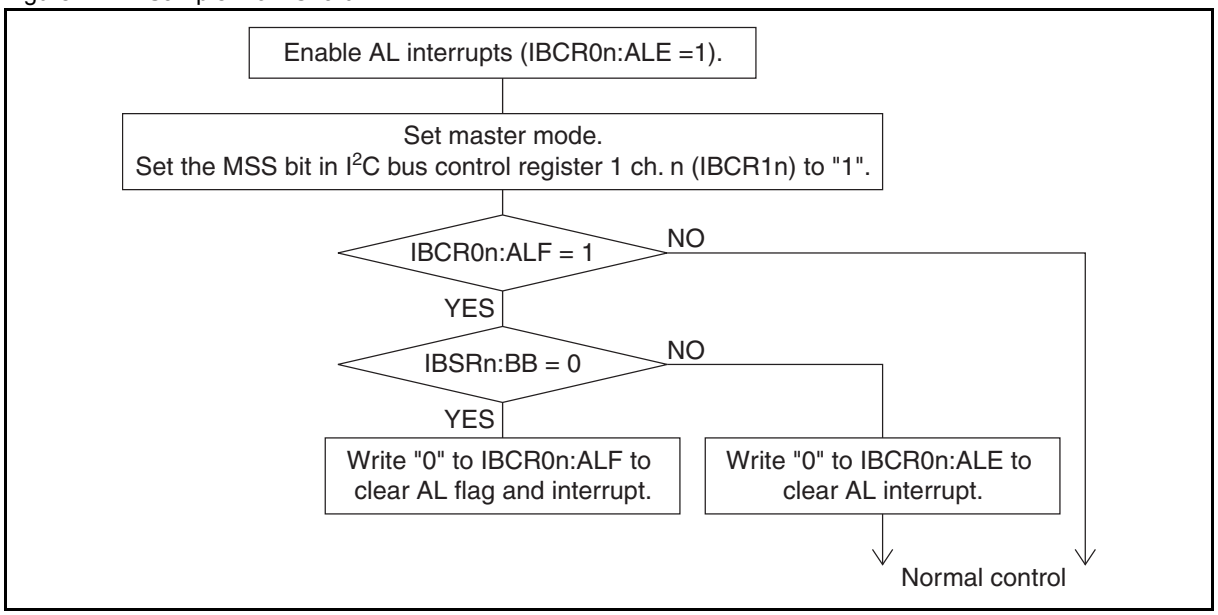

Example of generating an interrupt (IBCR1n:INT = 1) with "IBCR0n:ALF = 1" detected

If a START condition is generated by the program (by setting the IBCR1n:MSS bit to "1") with the bus busy (IBSRn:BB = 1) and arbitration lost detected, a IBCR1n:INT bit interrupt occurs upon detection of "IBCR0n:ALF = 1".

Figure 24-8. Timing Diagram with Interrupt Generated with "IBCR0n:ALF = 1" Detected

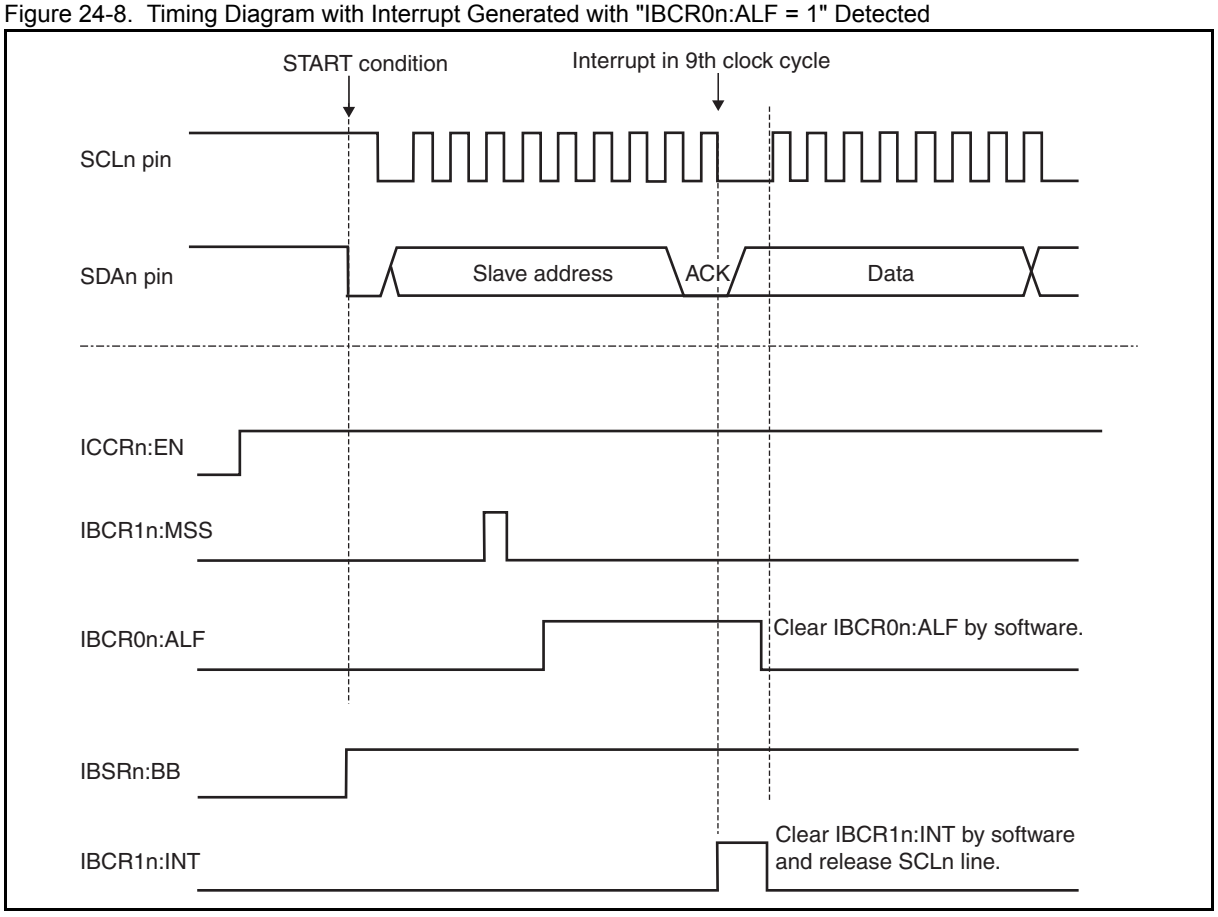

24.6.2 Function to Wake up the MCU from Standby Mode

The wakeup function enables the I^2C macro to be accessed while the MCU is in stop or watch mode.

24.6.2.1 Function to Wake Up the MCU from Standby Mode

The I^2C macro includes a function to wake up the MCU from standby mode. The function is enabled by writing "1" to the IBCR0n:WUE bit.

With the MCU in stop mode or watch mode and the IBCR0n:WUE bit set to "1", if a start condition is detected on the I^2C bus, the wakeup interrupt request flag bit (IBCR0n:WUF) is set to "1" and the wakeup interrupt request is generated to wake up the MCU from stop/watch mode.

- Set IBCR0n:WUE to "1" immediately before setting the MCU to stop or watch mode. Similarly, clear IBCR0n:WUE (by writing "0") after the MCU wakes up from stop or watch mode so that I^2C operation can restart as soon as possible.
- The wakeup function only applies to the MCU stop and watch modes.

Figure 24-9. Comparison of Normal I^2C Operation and Wakeup Operation

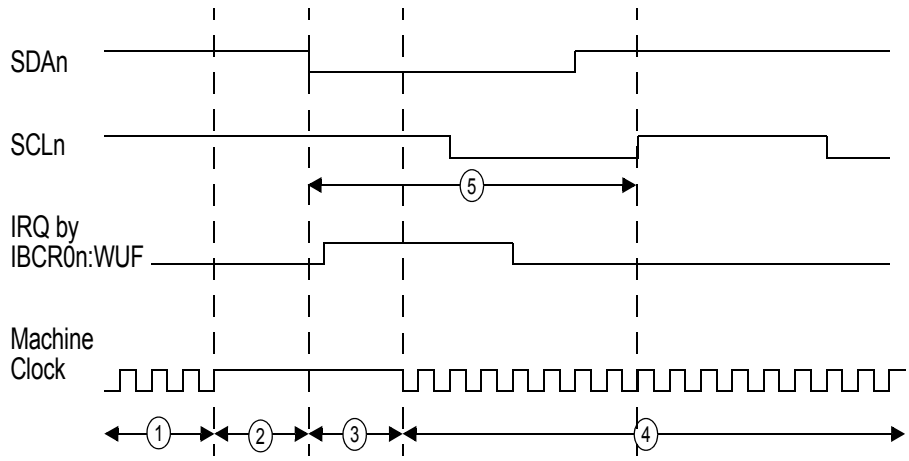

①Set the IBCR0n:WUE bit to "1" immediately before entering stop/watch mode and make sure that IBSRn:BB = 0.

②Set the MCU to stop/watch mode and the machine clock stops.

③Detect a start condition in stop mode or watch mode. IBCR0n:WUF is set to 1 and a wakeup IRQ is generated. In stop mode, after the oscillation stabilization wait time, the MCU wakes up and enters the clock mode used before entering stop mode or watch mode.

④Clear the IBCR0n:WUE bit to "0" so that I^2C can restart the normal operation, and clear the IBCR0n:WUF bit to "0" to clear the wakeup interrupt.

⑤To receive the data byte correctly, the SCLn must be released in the first cycle after 100 μs (assuming a minimum oscillation stabilization wait time of 100 μs) from the start of I^2C transmission (falling edge detection of SDAn).

The following sample flow chart illustrates the wakeup function.

Figure 24-10. Sample Flow Chart 2

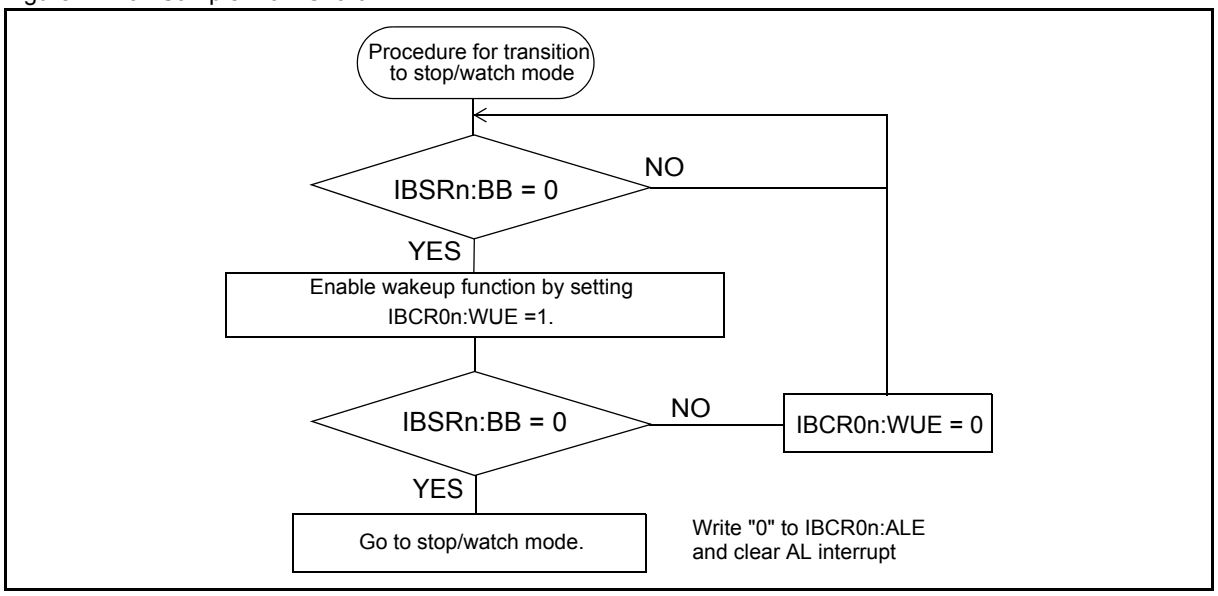

24.7 Registers

This section describes the registers of the I²C bus interface.

Table 24-5. List of I²C Bus Interface Registers

Register abbreviation	Register name	Reference
IBCR0n	I²C bus control register 0 ch. n	24.7.1
IBCR1n	I²C bus control register 1 ch. n	24.7.2
IBSRn	I²C bus status register ch. n	24.7.3
IDDRn	I²C data register ch. n	24.7.4
IAARn	I²C address register ch. n	24.7.5
ICCRn	I²C clock control register ch. n	24.7.6

24.7.1 I²C Bus Control Register 0 ch. n (IBCR0n)

The I²C bus control register 0 ch. n (IBCR0n) controls the address acknowledge in the transmission of the first byte, selects the timing of the transfer completion interrupt, and enables or disables the arbitration lost interrupt, the STOP condition detection interrupt and MCU standby wakeup function.

Register Configuration

bit	7	6	5	4	3	2	1	0
Field	AACKX	INTS	ALF	ALE	SPF	SPE	WUF	WUE
Attribute	R/W	R/W	R/W	R/W	R/W	R/W	R/W	R/W
Initial value	0	0	0	0	0	0	0	0

Register Functions

[bit7] AACKX: Address acknowledge disable bit

This bit controls the address acknowledge in the transmission of the first byte.

Writing "0" to this bit causes the address acknowledge to be output automatically (The address acknowledge is returned automatically if the slave address matches).

Writing "1" to this bit prevents the address acknowledge from being output.

Modify the setting of this bit in either of the following ways:

- Write "1" to this bit in master mode.
- Clear this bit to "0" after checking that the bus busy bit (IBSRn:BB) is "0".

Notes:

- If AACKX = 1 and IBSRn:FBT = 0 when a transfer completion interrupt is generated (IBCR1n:INT = 1), no address acknowledge is output even though the I²C address matches the slave address. Clear the IBCR1n:INT bit to "0" as an interrupt is generated upon completion of transfer of each byte of address/data in the same way as during addressing.
- If AACKX = 1 and IBSRn:FBT = 1 when a transfer completion interrupt is generated (IBCR1n:INT = 1), "1" might be written to AACKX after addressing as in slave mode. Either continue normal communication after setting AACKX to "0" again or restart communication after disabling I²C operation (ICCRn:EN = 0).

bit7	Details
Writing "0"	Enables address acknowledge.
Writing "1"	Disables address acknowledge.

[bit6] INTS: Timing select bit for transfer completion flag bit at data reception

This bit selects the timing of the transfer completion interrupt (IBCR1n:INT) when data is received. Modify this bit only when IBSRn:TRX = 0 and IBSRn:FBT = 0.

Writing "0" to this bit sets the transfer completion interrupt request flag bit (IBCR1n:INT) to "1" in the ninth SCLn cycle.

Writing "1" to this bit sets the transfer completion interrupt request flag bit (IBCR1n:INT) to "1" in the eighth SCLn cycle.

Notes:

- The transfer completion interrupt request flag bit (IBCR1n:INT) is set to "1" always in the ninth SCLn cycle except during data reception (IBSRn:TRX = 1 or IBSRn:FBT = 1).
- If the data acknowledge depends on the content of the received data (such as packet error checking used by the SM bus), control the data acknowledge by setting the data acknowledge enable bit (IBCR1n:DACKE) after writing "1" to this bit (for example, using a previous transfer completion interrupt) to read latest received data.
- The latest data acknowledge (IBSRn:LRB) can be read after the acknowledge has been received (IBSRn:LRB must be read during the transfer completion interrupt in the ninth SCLn cycle.) If acknowledge is read when this bit is "1", therefore, you must write "0" to this bit in the transfer completion interrupt in the eighth SCLn cycle so that another transfer completion interrupt will occur in the ninth SCLn cycle.

bit6	Details
Writing "0"	Sets the INT bit to "1" in the ninth SCLn cycle.
Writing "1"	Sets the INT bit to "1" in the eighth SCLn cycle.

[bit5] ALF: Arbitration lost interrupt request flag bit

This bit detects the arbitration lost.

An arbitration lost interrupt request is generated if this bit and the IBCR0n:ALE bit are both "1".

If one of the following conditions is satisfied, this bit is set to "1".

- An arbitration lost is detected when this device is transmitting data/address as a master.
- "1" is written to the IBCR1n:MSS bit with the I^2C bus being used by another system. However, when "1" is written to the MSS bit after this device returns AACK or GACK as a slave, the ALF bit is not set to "1".

If one of the following conditions is satisfied, this bit is set to "0".

- With IBSRn:BB = 0, "0" is written to the ALF bit.
- "0" is written to the IBCR1n:INT bit to clear the transmission completion flag bit.

Writing "1" to this bit has no effect on operation.

When read by the read-modify-write (RMW) type of instruction, this bit always returns "1".

bit5	Details
Reading "0"	Indicates that no arbitration lost has been detected.
Reading "1"	Indicates that an arbitration lost has been detected.
Writing "0"	Clears this bit.
Writing "1"	Has no effect on operation.

[bit4] ALE: Arbitration lost interrupt enable bit

This bit enables or disables the arbitration lost interrupt.

When this bit and the ALF bit are both set to "1", an arbitration lost interrupt request is generated.

bit4	Details
Writing "0"	Disables the arbitration lost interrupt.
Writing "1"	Enables the arbitration lost interrupt.

[bit3] SPF: STOP detection interrupt request flag bit

This bit detects the STOP condition.

When this bit and the IBCR0n:SPE bit are both set to "1", a STOP detection interrupt request is generated.

With the bus busy, when a valid STOP condition is correctly detected, this bit is set to "1".

When read by the read-modify-write (RMW) type of instruction, this bit always returns "1".

bit3	Details
Reading "0"	Indicates that no STOP condition has been detected.
Reading "1"	Indicates that a STOP condition has been detected.
Writing "0"	Clears this bit.
Writing "1"	Has no effect on operation.

[bit2] SPE: STOP detection interrupt enable bit

This bit enables or disables the STOP detection interrupt.

When this bit and the SPF bit are both set to "1", a STOP detection interrupt request is generated.

bit2	Details
Writing "0"	Disables the STOP detection interrupt.
Writing "1"	Enables the STOP detection interrupt.

[bit1] WUF: MCU standby mode wakeup interrupt request flag bit

This bit detects an MCU standby mode wakeup in stop mode or watch mode.

When this bit and the IBCR0n:WUE bit are both set to "1", a wakeup interrupt request is generated.

With the wakeup function enabled (WUE = 1), when a START condition is detected, the WUF bit is set to "1".

When read by the read-modify-write (RMW) type of instruction, this bit always returns "1".

bit1	Details
Reading "0"	Indicates that no START condition has been detected.
Reading "1"	Indicates that a START condition has been detected.
Writing "0"	Clears this bit.
Writing "1"	Has no effect on operation.

[bit0] WUE: MCU standby mode wakeup function enable bit

This bit enables or disables the MCU standby mode wakeup function in stop mode or watch mode.

In stop mode or watch mode, when this bit is set to "1" and a START condition is generated, a wakeup interrupt request is generated to start the I^2C operation.

bit0	Details
Writing "0"	Disables the MCU standby mode wakeup function in stop mode or watch mode.
Writing "1"	Enables the MCU standby mode wakeup function in stop mode or watch mode.

Notes:

- Write "1" to this bit right before the MCU enters stop mode or watch mode. To ensure that the I^2C operation can restart immediately after the MCU wakes up from stop mode or watch mode, clear (write "0" to) this bit as soon as possible.
- When a wakeup interrupt request is generated, the MCU wakes up after the oscillation stabilization wait time elapses. In order to prevent data loss from occurring immediately after the MCU wakes up, after 100 µs (assuming that the minimum oscillation stabilization wait time is 100 µs) elapses since a wakeup caused by the start of I^2C transmission (upon detection of the falling edge of SDAn), the SCLn must rise in the first cycle and the first bit must be received as data.
- In standby mode of the MCU, the status flags, state machine, and I^2C bus output for the I^2C function keep their states existing before the MCU entered standby mode. To prevent a hang-up of the entire I^2C bus system, ensure that IBSRn:BB is set to "0" before making the MCU enter standby mode.
- The wakeup function does not support the transition of the MCU to stop mode or watch mode with the BB bit set to "1". When the MCU enters stop mode or watch mode with the BB bit set to "1", a bus error occurs upon detection of a START condition.
- The wakeup function is effective only when the MCU is in stop mode or watch mode.

Note:

The values of the AACKX, INTS, and WUE bits in the IBCR0n register become "0" and non-writable either when the I^2C operation is disabled (ICCRn:EN = 0) or when a bus error occurs (IBCR1n:BER = 1).

24.7.2 I²C Bus Control Register 1 ch. n (IBCR1n)

The I²C bus control register 1 ch. n (IBCR1n) controls the following functions: bus error interrupt, START condition generation, master/slave mode selection, data acknowledge, general call acknowledge and transfer completion interrupt.

Register Configuration

bit	7	6	5	4	3	2	1	0
Field	BER	BEIE	SCC	MSS	DACKE	GACKE	INTE	INT
Attribute	R/W	R/W	R/W	R/W	R/W	R/W	R/W	R/W
Initial value	0	0	0	0	0	0	0	0

Register Functions

[bit7] BER: Bus error interrupt request flag bit

This bit detects the bus error.

When this bit and the BEIE bit are both set to "1", a bus error interrupt is generated.

This bit is set to "1" when an invalid START condition or an invalid STOP condition is detected.

When read by the read-modify-write (RMW) type of instruction, this bit always returns "1".

When this bit is set to "1", the ICCRn:EN bit is set to "0", and the I²C bus interface operation is disabled and data transfer is terminated.

bit7	Details
Reading "0"	Indicates that no bus error has been detected.
Reading "1"	Indicates that an invalid START condition or an invalid STOP condition has been detected.
Writing "0"	Clears this bit.
Writing "1"	Has no effect on operation.

[bit6] BEIE: Bus error interrupt enable bit

This bit enables or disables the bus error interrupt.

When this bit and the BER bit are both set to "1", a bus error interrupt request is generated.

bit6	Details
Writing "0"	Disables the bus error interrupt.
Writing "1"	Enables the bus error interrupt.

[bit5] SCC: START condition generation bit

This bit generates a repeated START condition to restart communications in master mode.

In master mode, writing "1" to this bit generates a repeated START condition.

Writing "0" to this bit has no effect on operation.

bit5	Details
Read access	The read value is always "0".
Writing "0"	Has no effect on operation.
Writing "1"	Generates a repeated START condition in master mode.

Notes:

- Do not set this bit to "1" or the IBCR1n:MSS bit to "0" at the same time.
- With the IBCR1n:INT bit set to "0", an attempt to write "1" to the SCC bit is ignored (no START condition is generated). In addition, with the INT bit set to "1", when writing "1" to the SCC bit and writing "0" to the INT bit occur simultaneously, writing "1" to the SCC bit is given priority.

[bit4] MSS: Master/slave select bit

This bit selects an operation mode from master mode and slave mode.

Writing "1" to this bit while the I^2C bus is in the idle state (IBSRn:BB = 0) selects master mode, generates a START condition, and then starts address transfer.

Writing "0" to the bit while the I^2C bus is in the busy state (IBSRn:BB = 1) selects slave mode, generates a STOP condition, and then terminates data transfer.

When an arbitration lost occurs during data or address transfer in master mode, this bit is cleared to "0" and the operation mode switches to slave mode.

bit4	Details
Writing "0"	Slave mode
Writing "1"	Master mode

Notes:

- Do not set this bit to "0" or the SCC bit to "1" at the same time.
- With the INT bit set to "0", an attempt to write "0" to the MSS bit is ignored. With the INT bit set to "1', when writing "0" to the MSS bit and writing "0" to the INT bit occur simultaneously, writing "0" to the MSS bit is given priority.
- In slave mode, during transmission or reception, writing "1" to the MSS bit does not set the ALF bi to "1". Do not write "1" to the MSS bit during transmission or reception in slave mode.

[bit3] DACKE: Data acknowledge enable bit

This bit controls the data acknowledge in data reception.

Writing "0" to this bit disables data acknowledge output.

Writing "1" to this bit enables data acknowledge output. In master mode, with this bit set to "1", a data acknowledge is output in the ninth SCLn cycle during data reception. In slave mode, a data acknowledge is output in the ninth SCLn cycle only when an address acknowledgment has already been output.

bit3	Details
Writing "0"	Disables data acknowledge output.
Writing "1"	Enables data acknowledge output.

[bit2] GACKE: General call address acknowledge enable bit

This bit controls the general call address acknowledge.

Writing "0" to this bit disables general call address acknowledge output.

With this bit set to "1", in master mode or slave mode, when a general call address acknowledge (0x00) is received, a general call address acknowledge is output.

bit2	Details
Writing "0"	Disables the general call address acknowledge.
Writing "1"	Enables the general call address acknowledge.

[bit1] INTE: Transfer completion interrupt enable bit

This bit enables or disables the transfer completion interrupt.

When this bit and the IBCR1n:INT bit are both set to "1", a transfer completion interrupt request is generated.

bit1	Details
Writing "0"	Disables the transfer completion interrupt.
Writing "1"	Enables the transfer completion interrupt.

[bit0] INT: Transfer completion interrupt request flag bit

This bit detects the transfer completion.

When this bit and the INTE bit are both set to "1", a transfer completion interrupt request is generated.

If one of the following four conditions is satisfied, upon completion of transferring 1-byte address or data (the setting of the INTS bit determines whether the 1-byte address or data includes an acknowledge.), this bit is set to "1".

- In bus master mode
- The device is addressed as slave.
- The I^2C bus interface has received a general call address.
- The I^2C bus interface has detected an arbitration lost.
- Arbitration lost detected

If one of the following two conditions is satisfied, this bit is set to "0".

- "0" is written to this bit.
- In master mode, a repeated START condition (IBCR1n:SCC = 1) or a STOP condition (IBCR1n:MSS = 0) is generated.

Writing "1" to this bit has no effect on operation.

When read by the read-modify-write (RMW) type of instruction, this bit always returns "1".

Writing "0" to clear this bit (its value becomes "0") releases the SCLn line, and the transmission of the next byte of data is then enabled.

bit0	Details
Reading "0"	Indicates that data transfer has not been completed.
Reading "1"	Indicates that1-byte data (including an acknowledge) transfer has been completed.
Writing "0"	Clears this bit.
Writing "1"	Has no effect on operation.

Notes:

- In the case of writing "1" to the SCC bit while this bit is "0", the setting of the SCC bit is given priority, and a START condition is generated.
- In the case of writing "0" to the MSS bit while this bit is "0", the setting of the MSS bit is given priority, and a STOP condition is generated.

- During data reception, with the IBCR0n:INTS bit already set to "1", this bit becomes "1" after 1-byte data (not including an acknowledge) transfer is completed. If the INTS bit is set to "0", this bit becomes "1" after the transmission/reception of 1-byte data/address (including an acknowledge) is completed.

Notes:

- When clearing the interrupt request flag bit (IBCR1n:BER) by writing "0" to it, do not update the interrupt request enable bit (IBCR1n:BEIE) at the same time.
- All bits in the IBCR1n register except the BER and BEIE bits are cleared to "0" either when the I^2C bus interface operation is disabled (ICCRn:EN = 0) or when a bus error occurs (IBCR1n:BER = 1).

24.7.3 I²C Bus Status Register ch. n (IBSRn)

The I²C bus status register ch. n (IBSRn) indicates the status of the I²C bus interface.

Register Configuration

bit	7	6	5	4	3	2	1	0
Field	BB	RSC	—	LRB	TRX	AAS	GCA	FBT
Attribute	R	R	—	R	R	R	R	R
Initial value	0	0	0	0	0	0	0	0

Register Functions

[bit7] BB: Bus busy bit

This bit indicates the bus state.

bit7	Details
Reading "0"	Indicates that a STOP condition has been detected and the bus has entered the idle state.
Reading "1"	Indicates that a START condition has been detected and the bus has entered the busy state.

[bit6] RSC: Repeated START condition detection bit

This bit detects the repeated START condition.

This bit is set to "1" when a repeated START condition is detected.

If one of the following conditions is satisfied, this bit is set to "0".

- "0" is written to the IBCR1n:INT bit.
- In slave mode, the slave address does not match the address set in the IAARn register.
- In slave mode, the slave address matches the address set in the IAARn register but the IBCR0n:AACKX bit is set to "1".
- In slave mode, the device receives a general call address, but the IBCR1n:GACKE bit is set to "0".
- A STOP condition is detected.

bit6	Details
Reading "0"	Indicates that no repeated START condition has been detected.
Reading "1"	Indicates that the bus is in use and a repeated START condition has been detected.

[bit5] Undefined bit

The read value of this bit is always "0". Writing a value to this bit has no effect on operation.

[bit4] LRB: Acknowledge storage bit

This bit captures the value of the SDAn line in the ninth shift clock cycle during data byte transfer.

This bit is set to "1" when no acknowledge has been detected (SDAn = "H").

If one of the following conditions is satisfied, this bit is set to "0".

- An acknowledge is detected (SDAn = "L").
- A START condition or a STOP condition is detected.

bit4	Details
Reading "0"	Indicates that an acknowledge has been detected in the ninth shift clock cycle.
Reading "1"	Indicates that no acknowledge has been detected in the ninth shift clock cycle.

Note:

According to the above description, this bit must be read after an acknowledge (Read the bit value at a transfer completion interrupt in the ninth SCLn cycle). Therefore, if an acknowledge is read with the IBCR0n:INTS bit set to "1", write "0" to the INTS bit at a transfer completion interrupt generated in the eighth SCLn cycle so that another transfer completion interrupt is to be generated in the ninth SCLn cycle.

[bit3] TRX: Data transfer status bit

This bit indicates the data transfer mode.

This bit is set to "1" when data transfer is executed in transmission mode.

If one of the following conditions is satisfied, this bit is set to "0".

- In receive mode, data transfer is executed.
- The device receives an NACK in slave transmit mode.

bit3	Details
Reading "0"	Indicates that the data transfer mode is receive mode.
Reading "1"	Indicates that the data transfer mode is transmit mode.

[bit2] AAS: Addressing detection bit

This bit indicates whether the MCU has undergone addressing in slave mode.

This bit is set to "1" when the MCU has undergone addressing in slave mode.

This bit is set to "0" when a START condition or a STOP condition has been detected.

bit2	Details
Reading "0"	Indicates that the MCU has not undergone addressing in slave mode.
Reading "1"	Indicates that the MCU has undergone addressing in slave mode.

[bit1] GCA: General call address detection bit

This bit detects a general call address.

If one of the following conditions is satisfied, this bit is set to "1".

- The device receives a general call address (0x00) in slave mode.
- With IBCR1n:GACKE set to "1", the device receives a general call address (0x00) in master mode.
- In master mode, an arbitration lost is detected during the transmission of the second byte of a general call address.

If one of the following conditions is satisfied, this bit is set to "0".

- A START condition or a STOP condition is detected.
- In master mode, no arbitration lost is detected during the transmission of the second byte of a general call address.

bit1	Details
Reading "0"	Indicates that the I^2C bus interface has not received a general call address (0x00) in slave mode.
Reading "1"	Indicates that the I^2C bus interface has received a general call address (0x00) in slave mode.

[bit0] FBT: First byte detection bit

This bit detects the first byte.

This bit is set to "1" when a START condition is detected.

If one of the following conditions is satisfied, this bit is set to "0".

- "0" is written to the IBCR1n:INT bit.
- In slave mode, the slave address does not match the address set in the IAARn register.
- In slave mode, the slave address matches the address set in the IAARn register, but the IBCR0n:AACKX bit is "1".
- In slave mode, the device receives a general call address, but the IBCR1n:GACKE bit is "0".

bit0	Details
Reading "0"	Indicates that the receive data is not the first byte in data reception.
Reading "1"	Indicates that the receive data is the first byte (address) in data reception.

24.7.4 I²C Data Register ch. n (IDDRn)

The I²C data register ch. n (IDDRn) sets the data or address to be transmitted, and holds the data or address received.

Register Configuration

bit	7	6	5	4	3	2	1	0
Field	D7	D6	D5	D4	D3	D2	D1	D0
Attribute	R/W	R/W	R/W	R/W	R/W	R/W	R/W	R/W
Initial value	0	0	0	0	0	0	0	0

Register Functions

In transmit mode, each bit of the data or address value written to the register is shifted to the SDAn line, starting with the MSB. The write side of this register is double-buffered, where if the bus is in use (IBSRn:BB = 1), the write data is loaded to the 8-bit shift register either when the current data transfer completion interrupt is cleared (writing "0" to the IBCR1n:INT bit) or when a repeated start condition is generated (writing "1" to the IBCR1n:SCC bit). Each bit of the shift register data is output (shifted) to the SDAn line.

Note that writing to this register has no effect on the current data transfer. In slave mode, however, data is transferred to the shift register after the address is determined.

The received data or address can be read from this register at the transfer completion interrupt (IBCR1n:INT = 1). However, since the serial transfer register is directly read from when the received data or address is read, the receive data is valid only when the INT bit is "1".

24.7.5 I²C Address Register ch. n (IAARn)

The I²C address register ch. n (IAARn) register sets the slave address.
In slave mode, the I²C bus interface receives address data from the master and compares it with the value of this register.

Register Configuration

bit	7	6	5	4	3	2	1	0
Field	—	A6	A5	A4	A3	A2	A1	A0
Attribute	—	R/W	R/W	R/W	R/W	R/W	R/W	R/W
Initial value	0	0	0	0	0	0	0	0

Register Functions

[bit7] Undefined bit

The read value of this bit is always "0". Writing a value to this bit has no effect on operation.

[bit6:0] A[6:0]: Address bits

These bits set the slave address.

24.7.6 I²C Clock Control Register ch. n (ICCRn)

The I²C clock control register ch. n (ICCRn) register enables the I²C operation and selects the shift clock frequency.

Register Configuration

bit	7	6	5	4	3	2	1	0
Field	DMBP	—	EN	CS4	CS3	CS2	CS1	CS0
Attribute	R/W	—	R/W	R/W	R/W	R/W	R/W	R/W
Initial value	0	0	0	0	0	0	0	0

Register Functions

[bit7] DMBP: Divider m bypass bit

This bit is used to bypass the divider m to generate the shift clock frequency.

Writing "0" to this bit sets the value set in the CS[4:3] bits as the divider m value (m = ICCRn:CS[4:3]).

When "1" is written to this bit, the divider m is to be bypassed.

Do not write "1" to this bit when the value of divider n is "4" (ICCRn:CS[2:0] = 0b000).

bit7	Details
Writing "0"	The settings of ICCRn:CS[4:3] (clock divide m) are valid.
Writing "1"	The settings of ICCRn:CS[4:3] (clock divide m) are invalid.

[bit6] Undefined bit

The read value of this bit is always "0". Writing a value to this bit has no effect on operation.

[bit5] EN: I²C bus interface operation enable bit

This bit enables the I²C bus interface operation.

Writing "0" to this bit disables the I²C bus interface operation and clears the following bits to "0".

- AACKX, INTS, and WUE bits in the IBCR0n register
- All bits in the IBCR1n register except the BER and BEIE bits
- All bits in the IBSRn register

Writing "1" to this bit enables the I²C bus interface operation.

If one of the following conditions is satisfied, this bit is set to "0".

- "0" is written to this bit.
- The BER bit in the IBCR1n register is set to "1".

bit5	Details
Writing "0"	Disables the I²C bus interface operation.
Writing "1"	Enables the I²C bus interface operation.

[bit4:3] CS[4:3]: Clock-1 select bits (Divider m)

[bit2:0] CS[2:0]: Clock-2 select bits (Divider n)

These bits set the shift clock frequency.

The shift clock frequency (Fsck) is set by the following equation:

$$Fsck = \frac{\phi}{(m \times n + 2)}$$

ϕ represents the machine clock frequency (MCLK).

bit4:3	Details
Writing "00"	5
Writing "01"	6
Writing "10"	7
Writing "11"	8

bit2:0	Details
Writing "000"	4
Writing "001"	8
Writing "010"	22
Writing "011"	38
Writing "100"	98
Writing "101"	128
Writing "110"	256
Writing "111"	512

Note:

If the standby mode wakeup function is not used, disable the I^2C bus interface operation before making the MCU transit to stop mode or watch mode.

24.8 Notes on Using I²C Bus Interface

This section provides notes on using the I²C bus interface.

24.8.1 Notes on Using I²C Bus Interface

Notes on setting I²C bus interface registers

- Enable the I²C bus interface operation (ICCRn:EN) before setting the I²C bus control registers ch. n (IBCR0n and IBCR1n).
- Setting the master/slave select bit (IBCR1n:MSS) to "1" starts data transfer.

Notes on setting the shift clock frequency

- The shift clock frequency can be calculated by determining the m, n, and DMBP values using the Fsck equation. See 24.7.6 I²C Clock Control Register ch. n (ICCRn) for details of the Fsck equation.
- Do not write "1" to the DMBP bit in the ICCRn register if the value of n is 4 (ICCRn:CS[2:0] = 0b000).

Notes on priority for simultaneous write operations

- Conflict between next byte transfer and stop condition
  When writing "0" to IBCR1n:MSS and clearing IBCR1n:INT occur simultaneously, the MSS bit is given priority and a STOP condition is generated.
- Conflict between next byte transfer and start condition
  When writing "1" to IBCR1n:SCC and clearing IBCR1n:INT occur simultaneously, the SCC bit is given priority and a START condition is generated.

Notes on setting up using software

- Do not select the repeated START condition (IBCR1n:SCC = 1) or slave mode (IBCR1n:MSS = 0) simultaneously.
- The I²C bus interface cannot return from interrupt processing if an interrupt request enable bit is enabled (IBCR1n:BEIE = 1 or IBCR1n:INTE = 1) with the interrupt request flag bit (IBCR1n:BER or IBCR1n:INT) set to "1". Clear the BER bit or the INT bit.
- The following bits are cleared to "0" when the I²C bus interface operation is disabled (ICCRn:EN = 0).
  - AACKX, INTS, and WUE bits in the IBCR0n register
  - All bits in the IBCR1n register except the BER bit and the BEIE bit
  - All bits in the IBSRn register

Notes on data acknowledgment

In slave mode, a data acknowledge is generated if one of the following conditions is satisfied.

- The received address matches the value in the address register (IAARn) and IBCR0n:AACKX is "0".
- A general call address (0x00) is received and IBCR1n:GACKE is "1".

Notes on selecting the transfer complete timing

- The transfer complete timing select bit (IBCR0n:INTS) is valid only during data reception (IBSRn:TRX = 0 and IBSRn:FBT = 0).
- In an operation other than data reception (IBSRn:TRX = 1 or IBSRn:FBT = 1), the transfer completion interrupt (IBCR1n:INT) is always generated in the ninth SCLn cycle.
- If the data acknowledge depends on the content of the received data (such as packet error checking used by the SM bus), control the data acknowledge by setting the data acknowledge enable bit (IBCR1n:DACKE) after writing "1" to the IBCR0n:INTS bit (for example, using a previous transfer completion interrupt) to read latest received data.
- The latest data acknowledge (IBSRn:LRB) can be read after the acknowledge is received (IBSRn:LRB must be read at a transfer completion interrupt in the ninth SCLn cycle.) Therefore, if an acknowledge is read with the IBCR0n:INTS bit set to "1", write "0" to the INTS bit at a transfer completion interrupt generated in the eighth SCLn cycle so that another transfer completion interrupt is to be generated in the ninth SCLn cycle.

Notes on using the MCU standby mode wakeup function

- Write "1" to the IBCR0n:WUE bit right before the MCU enters stop mode or watch mode. To ensure that the I^2C operation can restart immediately after the MCU wakes up from stop mode or watch mode, clear (write "0" to) this bit as soon as possible.
- When a wakeup interrupt request is generated, the MCU wakes up after the oscillation stabilization wait time elapses. In order to prevent data loss from occurring immediately after the MCU wakes up, after 100 µs (assuming that the minimum oscillation stabilization wait time is 100 µs) elapses since a wakeup caused by the start of I^2C transmission (upon detection of the falling edge of SDAn), the SCLn must rise in the first cycle and the first bit must be received as data.
- In standby mode of the MCU, the status flags, state machine, and I^2C bus output for the I^2C function keep their states existing before the MCU entered standby mode. To prevent a hang-up of the entire I^2C bus system, ensure that IBSRn:BB is set to "0" before making the MCU enter standby mode.
- The wakeup function does not support the transition of the MCU to stop mode or watch mode with the BB bit set to "1". When the MCU enters stop mode or watch mode with the BB bit set to "1", a bus error occurs upon detection of a START condition.
- To ensure that the I^2C bus interface operation correctly executes its operation, always clear IBCR0n:WUE to "0" after the MCU wakes up from stop mode or watch mode, regardless of whether the MCU has been woken up by to the I^2C wakeup function or the wakeup function of another resource (such as an external interrupt).

25. Example of Serial Programming Connection

This chapter describes the example of serial programming connection.

25.1 Basic Configuration of Serial Programming Connection

25.2 Example of Serial Programming Connection

25.1 Basic Configuration of Serial Programming Connection

The MB95810K Series supports Flash memory serial on-board programming. This section describes the configuration.

25.1.1 Basic Configuration of Serial Programming Connection

The BGM adaptor MB2146-07-E or MB2146-08-E, manufactured by Fujitsu Semiconductor Limited, is used for serial onboard programming.

Figure 25-1 shows the basic configuration of serial programming connection.

Figure 25-1. Basic Configuration of Serial Programming Connection

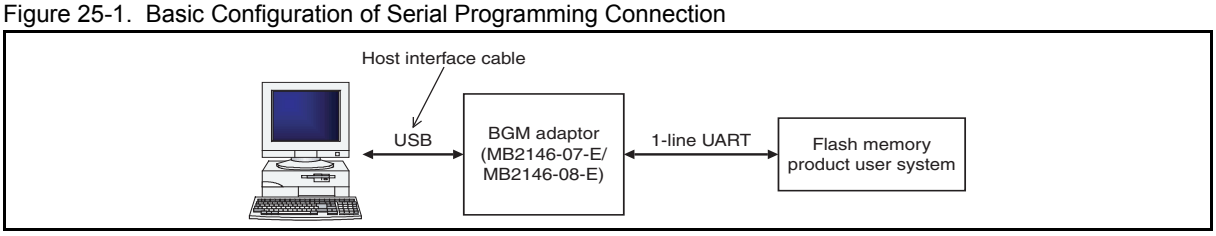

Table 25-1. Pins Used for Fujitsu Semiconductor Standard Serial Onboard Programming

Pin	Function	Details
V_{CC}	Power supply voltage supply pin	The programming voltage (2.4 V to 5.5 V) is supplied from the user system.
V_{SS}	GND pin	It is shared with the GND of the Flash microcontroller programmer.
C	Decoupling capacitor connection	Connect it to a decoupling capacitor and then to the ground.
$\overline{RST}$	Reset	The $\overline{RST}$ pin is pulled up to V_{CC}.
DBG	1-line UART setting serial programming mode	The DBG pin provides 1-line UART communication with the programmer. The serial programming mode is set if voltage is supplied to the DBG pin and the V_{CC} pin at specific timings. (For the timings, see Figure 25-2.)

- UART clock

The UART clock is supplied from the main CR clock.

25.2 Example of Serial Programming Connection

The MCU enters the PGM mode at the following timing.

25.2.1 MCU Transiting to PGM Mode

The MCU enters the PGM mode at the following timing.

The serial programmer controls the DBG pin according to V_{CC} input.

Figure 25-2. Timing Diagram

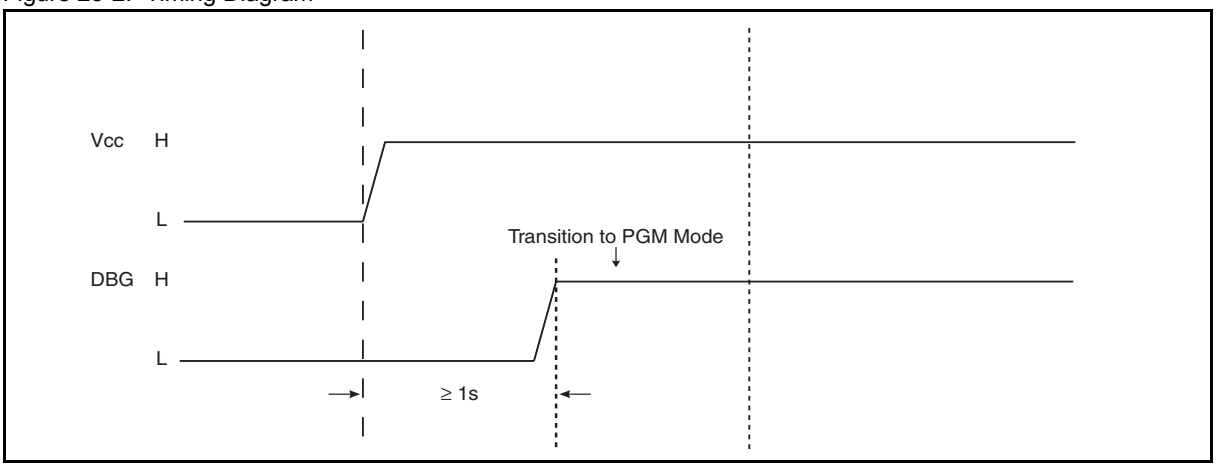

25.2.2 Example of Serial Programming Connection

Figure 25-3 shows an example of connection for serial programming.

Figure 25-3. Example of Serial Programming Connection

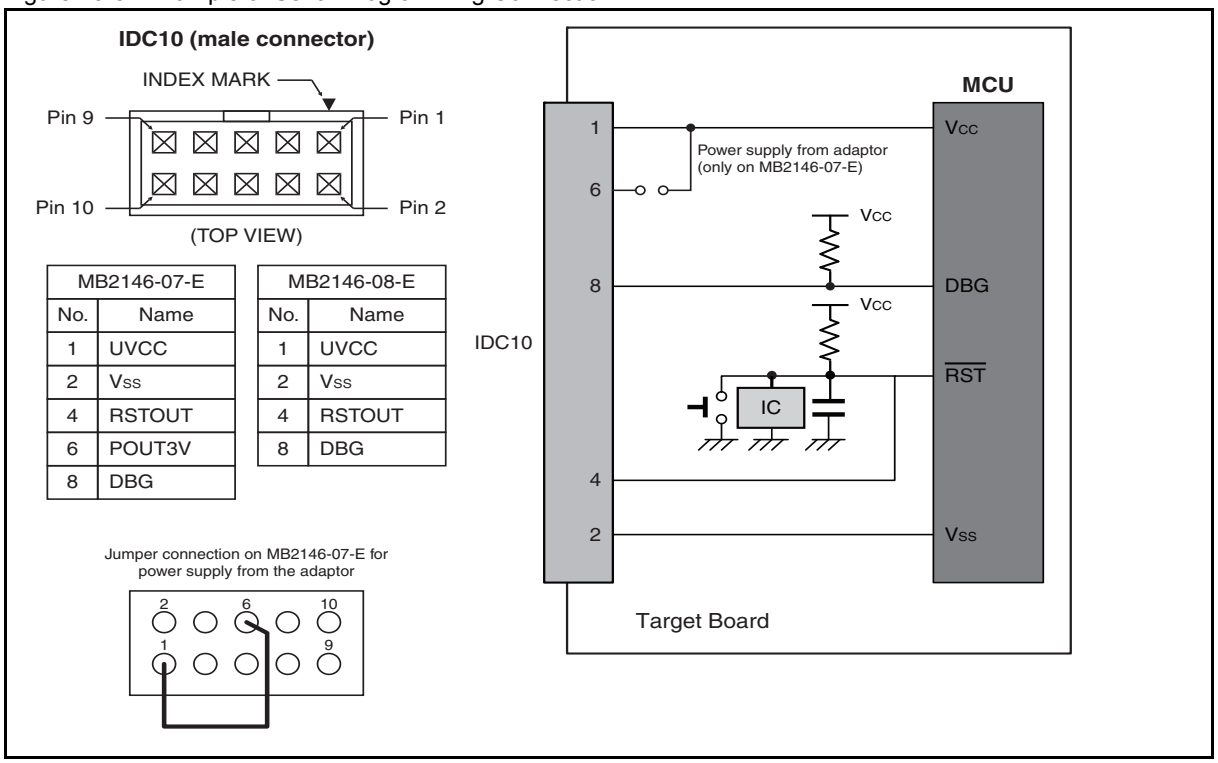

Since the pull-up resistor that can be used depends on the tool used and the interconnection length, refer to the tool document when selecting a pull-up resistor.

In the case of using the BGM adaptor MB2146-07-E of Cypress, it is recommended to use a pull-up resistor of approximately 2 kΩ to 10 kΩ.

26. Dual Operation Flash Memory

This chapter describes the function and operations of the 160/288/480 Kbit dual operation Flash memory.

26.1 Overview

26.2 Sector/Bank Configuration

26.3 Invoking Flash Memory Automatic Algorithm

26.4 Checking Automatic Algorithm Execution Status

26.5 Programming/Erasing Flash Memory

26.6 Operations

26.7 Flash Security

26.8 Registers

26.9 Notes on Using Dual Operation Flash Memory

26.1 Overview

The dual operation Flash memory is located at 0x1000 to 0x1FFF and at 0xC000 to 0xFFFF for 160 Kbit Flash memory, at 0x1000 to 0x1FFF and at 0x8000 to 0xFFFF for 288 Kbit Flash memory, or at 0x1000 to 0xFFFF for 480 Kbit Flash memory on the CPU memory map.

The dual operation Flash memory consists of an upper bank and a lower bank*. Unlike conventional Flash products, programming/erasing data to/from one bank and reading data from another bank can be executed simultaneously.

*: MB95F818K:
upper bank: 32 Kbyte × 1 + 24 Kbyte × 1; lower bank: 2 Kbyte × 2
MB95F816K:
upper bank: 32 Kbyte × 1; lower bank: 2 Kbyte × 2
MB95F814K:
upper bank: 16 Kbyte × 1; lower bank: 2 Kbyte × 2

26.1.1 Overview of Dual Operation Flash Memory

The following methods can be used to write data into and erase data from the Flash memory:

- Programming/erasing using a dedicated serial programmer
- Programming/erasing by program execution

Since data can be written into and erased from the Dual operation Flash memory by instructions from the CPU via the Flash memory interface circuit, program code and data can be efficiently updated with the device mounted on a circuit board. The minimum sector size of the dual operation Flash is 2 Kbyte, which is a sector configuration facilitating the management of the program/data area.

Data can be updated by executing a program in RAM or by executing a program in the Flash memory in dual operation. The erase/program operation and the read operation can be executed in different banks (upper bank/lower bank) simultaneously.

The dual operation Flash can use the following combinations:

Upper bank	Lower bank
Read	
Read	Program/sector erase
Program/sector erase	Read
Chip erase	
Sector erase (erase suspend)	Program
Program	Sector erase (erase suspend)

26.1.2 Features of Dual Operation Flash Memory

- Sector configuration
  - 20 Kbyte (16 Kbyte + 2 Kbyte × 2)
  - 36 Kbyte (32 Kbyte + 2 Kbyte × 2)
  - 60 Kbyte (32 Kbyte + 24 Kbyte + 2 Kbyte × 2)
- Two-bank configuration, enabling simultaneous execution of a program/erase operation and a read operation
- Automatic algorithm (Embedded Algorithm)
- Erase-suspend/erase-resume functions integrated
- Detecting the completion of programming/erasing using the data polling flag or the toggle bit
- Detecting the completion of programming/erasing by CPU interrupts
- Capable of erasing data in specific sectors (any combination of sectors)
- Compatible with JEDEC standard commands
- Number of program/erase cycles (minimum): 100000
- Flash read cycle time (minimum): 1 machine cycle

26.1.3 Programming and Erasing Flash Memory

- Programming data to and reading data from the same bank of the Flash memory cannot be executed simultaneously.
- To program data to or erase data from a bank in the Flash memory, copy the program for programming/erasing either to another bank or to the RAM first, and then execute the program.
- The dual operation Flash memory enables programming in the Flash memory and controlling programming by using interrupts. In addition, it is not necessary to download a program to RAM in order to program data to a bank, thereby reducing the time of program download and eliminating the need to protecting RAM data against power interruption.

26.2 Sector/Bank Configuration

This section shows the sector/bank configuration of the Flash memory.

26.2.1 Sector/Bank Configuration of Dual Operation Flash Memory

Figure 26-1. shows the sector configuration of the dual operation Flash memory. The upper and lower addresses of each sector are shown in the figure.

- Bank configuration

The lower bank of the Flash memory is SA0 and SA1 and the upper bank SA2 and SA3.

Figure 26-1. Sector/Bank Configuration of Dual Operation Flash Memory

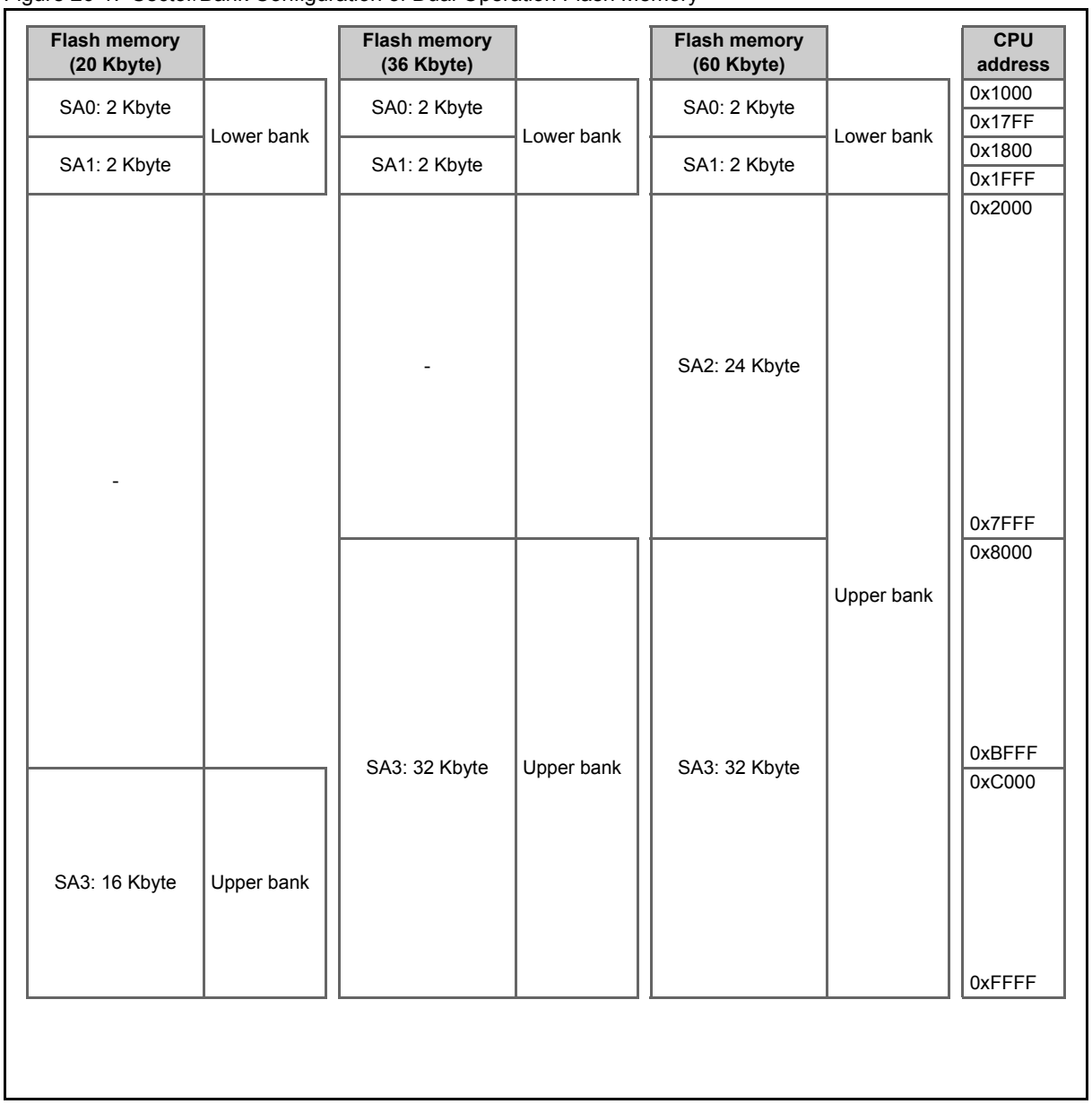

26.3 Invoking Flash Memory Automatic Algorithm

There are four commands that invoke the Flash memory automatic algorithm: read/reset, program, chip erase, and sector erase. The sector erase command is capable of suspending and resuming sector erase.

26.3.1 Command Sequence Table

Table 26-1. lists commands used in programming/erasing Flash memory.

Table 26-1. Command Sequence

Command sequence	Bus write cycle	1st bus write cycle		2nd bus write cycle		3rd bus write cycle		4th bus write cycle		5th bus write cycle		6th bus write cycle	
		Address	Data	Address	Data	Address	Data	Address	Data	Address	Data	Address	Data
Read/ reset	1	0xUXXX	0xF0	-	-	-	-	-	-	-	-	-	-
Program	4	0xUAAA	0xAA	0xU554	0x55	0xUAAA	0xA0	PA	PD	-	-	-	-
Chip erase	6	0xUAAA	0xAA	0xU554	0x55	0xUAAA	0x80	0xUAAA	0xAA	0xU554	0x55	0xUAAA	0x10
Sector erase	6	0xUAAA	0xAA	0xU554	0x55	0xUAAA	0x80	0xUAAA	0xAA	0xU554	0x55	SA	0x30
Unlock bypass entry	3	0xUAAA	0xAA	0xU554	0x55	0xUAAA	0x20	-	-	-	-	-	-
Unlock bypass program	2	0xUXXX	0xA0	PA	PD	-	-	-	-	-	-	-	-
Unlock bypass reset	2	0xUXXX	0x90	0xUXXX	any	-	-	-	-	-	-	-	
Sector erase suspend		Programming data "0xB0" to the address "0xUXXX" suspends erasing during sector erase.											
Sector erase resume		Programming data "0x30" to the address "0xUXXX" resumes suspended sector erase.											
Erase sector add		Programming data "0x30" to the SA adds a new sector to be erased.											
PA: Program address SA: Sector address (Specify any address in a sector.) PD: Program data U: The upper four bits represent an address in a sector to which data can be programmed. X: Any address value any: Any program data													

Notes:

- Addresses in Table 26-1 are values on the CPU memory map. All addresses and data are in hexadecimal notation. However, "X" is an arbitrary value. "U" in an address in Table 26-1 is not arbitrary, but represents the upper four bits (bit15 to bit12) of an address.
- The chip erase command is accepted only when programming data into all sectors has been enabled.
- The chip erase command is ignored if the bit for any sector in the flash memory sector write control register 0 (SWRE0) has been set to "0" (to disable programming data to that sector).

26.3.2 Note on Issuing Commands

Enable programming data into a required sector before issuing the first command in the command sequence table.

26.4 Checking Automatic Algorithm Execution Status

Since the Flash memory uses the automatic algorithm to execute the program/erase flow, its internal operating status can be checked through the hardware sequence flags.

26.4.1 Hardware Sequence Flags

Overview of hardware sequence flags

The hardware sequence flag consists of the following 5-bit output:

- Data polling flag (DQ7)
- Toggle bit flag (DQ6)
- Execution timeout flag (DQ5)
- Sector erase timer flag (DQ3)
- Toggle bit2 flag (DQ2)

The hardware sequence flags can tell whether a program command, a chip erase command or a sector erase command has been terminated, whether an erase code can be written and whether an erase sector or a non-erase sector is being read.

The value of a hardware sequence flag can be checked by a read access to the address of a target sector in the Flash memory after a command sequence is set. Note that a hardware sequence flag is output only to the bank from which a command has been issued.

Table 26-2 shows the bit allocation of the hardware sequence flags.

Table 26-2. Bit Allocation of Hardware Sequence Flag

Bit no.	7	6	5	4	3	2	1	0
Hardware sequence flag	DQ7	DQ6	DQ5	-	DQ3	DQ2	-	-

- To decide whether a program command, a chip erase command or a sector erase command is being executed or has been terminated, check the respective hardware sequence flags or the flash memory program/erase status bit in the flash memory status register (FSR:RDY). After programming/erasing is terminated, the Flash memory returns to the read/reset state.
- When creating a program/erase program, read data after confirming the termination of programming/erasing using the DQ2, DQ3, DQ5, DQ6 and DQ7 flags.
- The hardware sequence flags can also be used to check whether the second sector erase code write and those to be executed afterward are valid or not.

Description of hardware sequence flags

Table 26-3 lists the functions of the hardware sequence flags.

Table 26-3. List of Hardware Sequence Flag Functions

State		DQ7	DQ6	DQ5	DQ3	DQ2
State transition during normal operation	Programming → Programming completed (when program address has been specified)	$\overline{DQ7}$ → DATA: 7	Toggle → DATA: 6	0 → DATA: 5	0 → DATA: 3	0 → DATA: 2
	Chip/sector erase → Erase completed	0 → 1	Toggle → 1	0 → 1	1	Toggle → 1
	Sector erase wait → Erase started	0	Toggle	0	0 → 1	Toggle
	Erasing → sector erase suspended (Sector being erased)	0	Toggle → 0	0	1	Toggle
	Sector erase suspended → Erasing resumed (Sector being erased)	0	0 → Toggle	0	1	Toggle
	Sector erase being suspended (Sector not being erased)	DATA: 7	DATA: 6	DATA: 5	DATA: 3	DATA: 2
Abnormal operation	Programming	DQ7	Toggle	1	0	0
	Chip/sector erase	0	Toggle	1	1	Toggle

26.4.2 Data Polling Flag (DQ7)

The data polling flag (DQ7) is a hardware sequence flag indicating that the automatic algorithm is being executing or has been completed using the data polling function.

26.4.2.1 Data Polling Flag (DQ7)

Table 26-4 and Table 26-5 show the state transition of the data polling flag during normal operation and the one during abnormal operation respectively.

Table 26-4. State Transition of Data Polling Flag (During Normal Operation)

Operating state	Programming → Programming completed	Chip/sector erase → Erasing completed	Sector erase wait → Erasing started	Sector erase → Sector erase suspended (Sector being erased)	Sector erase suspended → Erasing resumed (Sector being erased)	Sector erase being suspended (Sector not being erased)
DQ7	$\overline{DQ7}$ → DATA: 7	0 → 1	0	0	0	DATA: 7

Table 26-5. State Transition of Data Polling Flag (During Abnormal Operation)

Operating state	Programming	Chip/sector erase
DQ7	DQ7	0

- At programming

When read access takes place during execution of the automatic write algorithm, the Flash memory outputs the inverted value of bit7 in the last data written to DQ7.

If read access takes place on completion of the automatic write algorithm, the Flash memory outputs bit7 of the value read from the read-accessed address to DQ7.

- At chip/sector erase

When read access is made to the sector currently being erased during execution of the chip/sector erase algorithm, bit7 of Flash memory outputs "0". Bit7 of Flash memory outputs "1" upon completion of chip/sector erase.

- At sector erase suspension

1. When read access takes place with a sector erase operation suspended, the Flash memory outputs "0" to DQ7 if the read address is the sector being erased. If not, the Flash memory outputs bit7 (DATA:7) of the value read from the read address to DQ7.
2. Referring the data polling flag (DQ7) together with the toggle bit flag (DQ6) permits a decision on whether Flash memory is in the sector erase suspended state or which sector is being erased.

Note:

Once the automatic algorithm has been started, read access to the specified address is ignored. Data reading is allowed after the data polling flag (DQ7) is set to "1". Data reading after the end of the automatic algorithm should be performed following read access made to confirm the completion of data polling.

26.4.3 Toggle Bit Flag (DQ6)

The toggle bit flag (DQ6) is a hardware sequence flag using the toggle bit function to indicate whether the automatic algorithm is being executed or has terminated.

26.4.3.1 Toggle Bit Flag (DQ6)

Table 26-6 and Table 26-7 show the state transition of the toggle bit flag during normal operation and the one during abnormal operation respectively.

Table 26-6. State Transition of Toggle Bit Flag (During Normal Operation)

Operating state	Programming → Programming completed	Chip/sector erase → Erasing completed	Sector erase wait → Erasing started	Sector erase → Sector erase suspended (Sector being erased)	Sector erase suspended → Erasing resumed (Sector being erased)	Sector erase being suspended (Sector not being erased)
DQ6	Toggle → DATA: 6	Toggle → 1	Toggle	Toggle → 0	0 → Toggle	DATA: 6

Table 26-7. State Transition of Toggle Bit Flag (During Abnormal Operation)

Operating state	Programming	Chip/sector erase
DQ6	Toggle	Toggle

- At programming and chip/sector erase

1. When read accesses are made continuously while the automatic write algorithm or the automatic chip/sector erase algorithm is being executed, the Flash memory toggles the output between "1" and "0" at each read access.
2. When read accesses are made continuously after the automatic write algorithm or the chip/sector erase algorithm terminates, the Flash memory outputs bit6 (DATA:6) of the value read from the read address at each read access.

- At sector erase suspension

When a read access is made with a sector erase operation suspended, the Flash memory outputs "0" if the read address is the sector being erased. Otherwise, the Flash memory outputs bit6 (DATA: 6) of the value read from the read address.

Note:

When using dual-operation Flash memory (Flash memory write control program is executed on the Flash memory), the toggle bit flag (DQ6) cannot be used to check the operating state of programming/erasing. See the notes in 26.9 Notes on Using Dual Operation Flash Memory when writing a program. The note above does not apply if the Flash memory write control program is executed on the RAM.

26.4.4 Execution Timeout Flag (DQ5)

The execution timeout flag (DQ5) is a hardware sequence flag indicating that the execution time of the automatic algorithm exceeds a specified time (required for programming/erasing) in the Flash memory.

26.4.4.1 Execution Timeout Flag (DQ5)

Table 26-8 and Table 26-9 show the state transition of the execution timeout flag during normal operation and the one during abnormal operation respectively.

Table 26-8. State Transition of Execution Timeout Flag (During Normal Operation)

Operating state	Programming → Programming completed	Chip/sector erase → Erasing completed	Sector erase wait → Erasing started	Sector erase → Sector erase suspended (Sector being erased)	Sector erase suspended → Erasing resumed (Sector being erased)	Sector erase being suspended (Sector not being erased)
DQ5	0 → DATA: 5	0 → 1	0	0	0	DATA: 5

Table 26-9. State Transition of Execution Timeout Flag (During Abnormal Operation)

Operating state	Programming	Chip/sector erase
DQ5	1	1

- At programming and chip/sector erase

When a read access is made with the automatic write algorithm or the automatic chip/sector erase algorithm invoked, the flag outputs "0" when the algorithm execution time is within the specified time (required for programming/erasing) or "1" when it exceeds that time.

The execution timeout flag (DQ5) can be used to check whether programming/erasing has succeeded or failed regardless of whether the automatic algorithm has been running or terminated. When the execution timeout flag (DQ5) outputs "1", it can be judged that programming fails if flash memory program/erase status bit (RDY) in the flash memory status register (FSR) is "0".

If an attempt is made to write "1" to a Flash memory address holding "0", for example, the Flash memory is locked, the time limit is exceeded and the execution timeout flag (DQ5) outputs "1". The state in which the execution timeout flag (DQ5) outputs "1" means that the Flash memory has not been used correctly; it does not mean that the Flash memory is defective. When this state occurs, execute the reset command.

26.4.5 Sector Erase Timer Flag (DQ3)

The sector erase timer flag (DQ3) is a hardware sequence flag indicating whether the Flash memory is waiting for sector erase after the sector erase command has started.

26.4.5.1 Sector Erase Timer Flag (DQ3)

Table 26-10 and Table 26-11 show the state transition of the sector erase timer flag during normal operation and the one during abnormal operation respectively.

Table 26-10. State Transition of Sector Erase Timer Flag (During Normal Operation)

Operating state	Programming → Programming completed	Chip/sector erase → Erasing completed	Sector erase wait → Erasing started	Sector erase → Sector erase suspended (Sector being erased)	Sector erase suspended → Erasing resumed (Sector being erased)	Sector erase being suspended (Sector not being erased)
DQ3	0 → DATA: 3	1	0 → 1	1	1	DATA: 3

Table 26-11. State Transition of Sector Erase Timer Flag (During Abnormal Operation)

Operating state	Programming	Chip/sector erase
DQ3	0	1

- At sector erase

1. When a read access is made after the sector erase command has started, the sector erase timer flag (DQ3) outputs "0" within the sector erase wait period. The flag outputs "1" if the sector erase wait period has elapsed.
2. When the data polling function or the toggle bit function indicates that the erase algorithm is being executed (DQ7 = 0, DQ6: toggle output), the Flash memory executes sector erase. If the command subsequently set is not a sector erase suspend command, it is ignored until sector erase is terminated.
3. If the sector erase timer flag (DQ3) is "0", the Flash memory can accept the sector erase command. Before writing the sector erase command to the Flash memory, make sure that the sector erase timer flag (DQ3) is "0". If the flag is "1", the Flash memory may not accept suspending the sector erase command.

- At sector erase suspension

When a read access is made with the sector erase operation suspended, the Flash memory outputs "1" if the read address of that read access is the address of a sector being erased. If the read address is not the address of a sector being erased, the Flash memory outputs bit3 (DATA: 3) of the value read from the read address.

26.4.6 Toggle Bit2 Flag (DQ2)

The toggle bit2 flag (DQ2) is a hardware sequence flag using the toggle bit function to indicate whether a read address is an erase target sector in the sector erase suspend state and whether output data is toggled.

26.4.6.1 Toggle Bit2 Flag (DQ2)

Table 26-12 and Table 26-13 show the state transition of the toggle bit2 flag during normal operation and the one during abnormal operation respectively.

Table 26-12. State Transition of Toggle Bit2 Flag (During Normal Operation)

Operating state	Programming → Programming completed	Chip/sector erase → Erasing completed	Sector erase wait → Erasing started	Sector erase → Sector erase suspended (Sector being erased)	Sector erase suspended → Erasing resumed (Sector being erased)	Sector erase being suspended (Sector not being erased)
DQ2	0 → DATA: 2	Toggle → 1	Toggle	Toggle	Toggle	DATA: 2

Table 26-13. State Transition of Toggle Bit2 Flag (During Abnormal Operation)

Operating state	Programming	Chip/sector erase
DQ2	0	Toggle

- At chip/sector erase

1. When read accesses are continuously made to a sector to be erased while the automatic chip/sector erase algorithm is being executed, the Flash memory toggles the output between "1" and "0" at each read access.
2. When read accesses are continuously made to a sector not to be erased while the automatic chip/sector erase algorithm is being executed, the Flash memory outputs bit2 (DATA: 2) of the value read from a read address of each read access.

- At sector erase suspension

1. With a sector erase operation suspended, when read accesses are continuously made to a sector to be erased, the Flash memory toggles the output between "1" and "0" whenever a read access is made.
2. With a sector erase operation suspended, when read accesses are continuously made to a sector not to be erased, the Flash memory outputs bit2 (DATA: 2) of the read value of a read address whenever a read access is made.

26.5 Programming/Erasing Flash Memory

This section describes the respective procedures for reading/resetting the Flash memory, programming, chip-erasing, sector-erasing, sector erase suspending and sector erase resuming by entering respective commands to invoke the automatic algorithm.

26.5.1 Details of Programming/Erasing Flash Memory

The automatic algorithm can be invoked by programming the read/reset, program, chip erase, sector erase, sector-erase suspend, and sector erase resume command sequence to the Flash memory from the CPU. Always write the commands of a command sequence continuously from the CPU to the Flash memory. The termination of the automatic algorithm can be checked by the data polling function. After the automatic algorithm terminates normally, the Flash memory returns to the read/reset state.

The operations are explained in the following order:

- Enter the read/reset state
- Program data
- Erase all data (chip erase)
- Erase arbitrary data (sector erase)
- Suspend sector erase
- Resume sector erase
- Unlock bypass program

26.5.2 Placing Flash Memory in Read/Reset State

This section explains the procedure for entering the read/reset command to place the Flash memory in read/reset state.

26.5.2.1 Placing Flash Memory in Read/Reset State

- To place the Flash memory in the read/reset state, send read/reset commands in the command sequence table from the CPU to the Flash memory.
- Since the read/reset state is the initial state of the Flash memory, the Flash memory always enters this state after power-on or the normal termination of a command. The read/reset state is also regarded as the command input wait state.
- In the read/reset state, data in the Flash memory can be read by a read access to the Flash memory.
- In the case of a read access to the Flash memory, no read/reset commands are required. If a command does not terminate normally, use a read/reset command to initialize the automatic algorithm.

26.5.3 Programming Data to Flash Memory

This section explains the procedure for entering the program command to program data to the Flash memory.

26.5.3.1 Programming Data to Flash Memory

- To invoke the automatic algorithm for programming data to the Flash memory, send program commands in the command sequence table consecutively from the CPU to the Flash memory.
- When data is programmed to a target address in the fourth cycle, the automatic algorithm is invoked and starts automatic programming.

Addressing method

Programming can be performed in any order of addresses and across a sector boundary. The size of data that can be written by a single program command is one byte only.

Note on programming data

- Bit data cannot be returned from "0" to "1" by programming. When "1" is written to bit data that is currently "0", the data polling function (DQ7) or toggle operation (DQ6) is not terminated, it is determined that Flash memory component is defective, and the execution timeout flag (DQ5) indicates that an error has occurred because the execution time of the automatic algorithm exceeds the programming time specified.
  When data is read in the read/reset state, the bit data remains "0". To make the bit data return from "0" to "1", erase the Flash memory.
- All commands are ignored during programming.
- During programming, if a hardware reset occurs, the integrity of data being written to the current address is not guaranteed. Start programming the data from the chip erase command or the sector erase command again.

26.5.3.2 Flash Memory Programming Procedure

- Figure 26-2 gives an example of the procedure for programming data to the Flash memory. The hardware sequence flag can be used to check the operating state of the automatic algorithm in the Flash memory. The data polling flag (DQ7) is used for checking the end of programming data into Flash memory in this example.
- Data for flag checking is read from the address to which data has been last written.
- Since the data polling flag (DQ7) and the execution timeout flag (DQ5) are changed simultaneously, check the data polling flag (DQ7) even when the execution timeout flag (DQ5) is "1".
- Similarly, since the toggle bit flag (DQ6) stops toggling at the same time as the execution timeout flag (DQ5) changes to "1", check DQ6 after DQ5 changes to "1".

Figure 26-2. Sample Procedure for Programming to Flash Memory

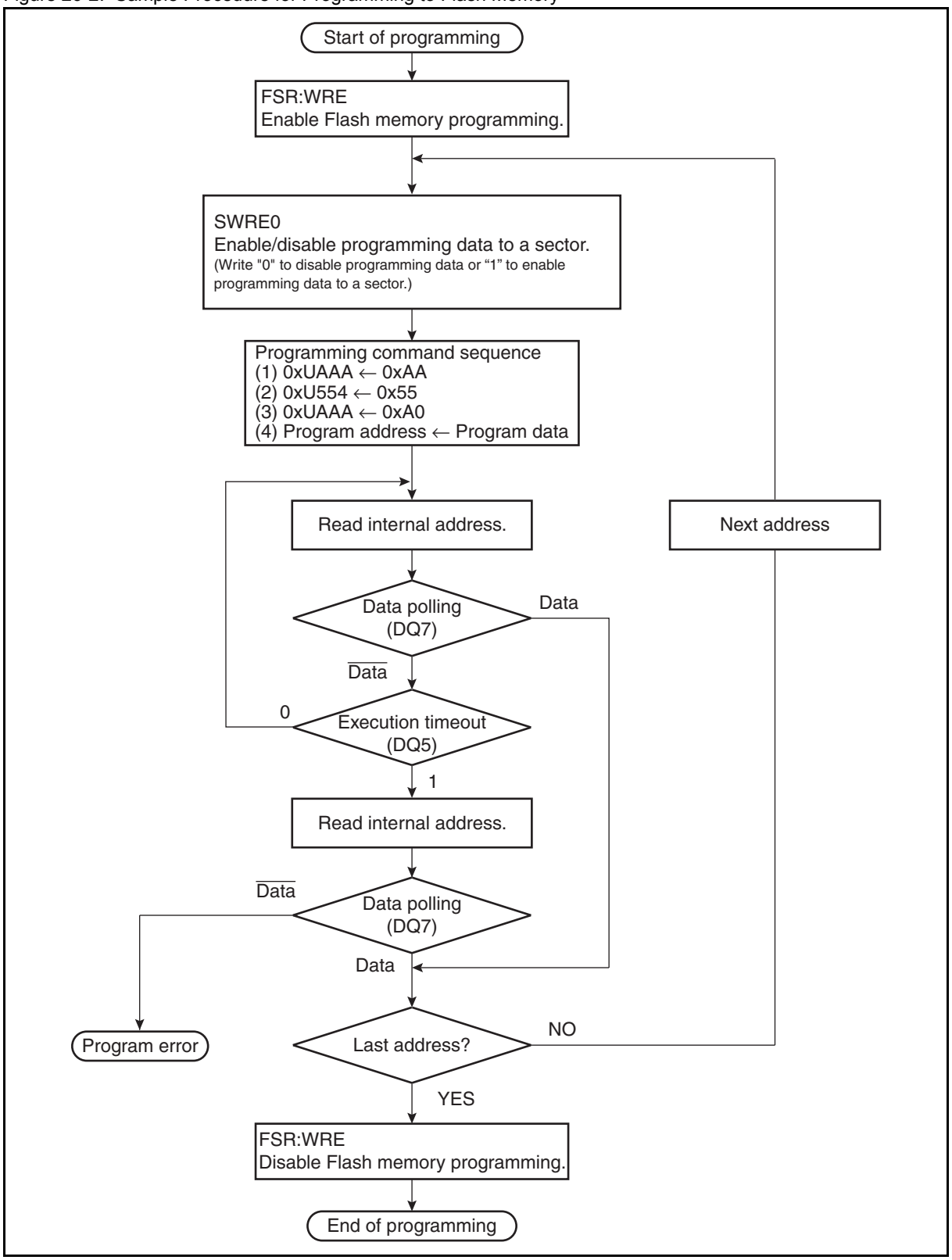

26.5.4 Erasing All Data from Flash Memory (Chip Erase)

This section explains the procedure for issuing the chip erase command to erase all data in the Flash memory.

26.5.4.1 Erasing Data from Flash Memory (Chip Erase)

- To erase all data from the Flash memory, send the chip erase command mentioned in the command sequence table continuously from the CPU to the Flash memory.
- The chip erase command is executed in six bus operations. Chip erasing starts at the point when the sixth cycle of programming commands is complete.
- In chip erase, the user does not need to program data to the Flash memory before starting erasing data. While the automatic erase algorithm is running, it automatically writes "0" to all cells in the Flash memory before erasing data.

26.5.4.2 Note on Chip Erase

- The chip erase command is accepted only when programming data to all sectors has been enabled. The chip erase command is ignored even if only one bit for a sector in the flash memory sector write control register 0 (SWRE0) has been set to "0" (to disable programming data to that sector).
- During chip erase, if a hardware reset occurs, the integrity of data in the Flash memory is not guaranteed.

26.5.5 Erasing Specific Data from Flash Memory (Sector Erase)

This section explains the procedure for entering the sector erase command to erase a specific sector in the Flash memory. Sector-by-sector erase is enabled and multiple sectors can also be specified simultaneously.

26.5.5.1 Erasing Specific Data from Flash Memory (Sector Erase)

To erase data from a specific sector in the Flash memory, send the sector erase command mentioned in the command sequence table continuously from the CPU to the Flash memory.

Specifying a sector

- The sector erase command is executed in six bus operations. A minimum of 35 µs sector erase wait time starts as an address in the sector to be erased is specified as the address for the sixth cycle and the sector erase code (0x30) is written as data.
- To erase data from multiple sectors, write the erase code (0x30) to an address in sector to be erased after programming the sector erase code to the address of the first sector to be erased as explained above.

Note on specifying multiple sectors

- Sector erase starts as a minimum of 35 µs sector erase wait time elapses after the last sector erase code has been written.
- To erase data from multiple sectors simultaneously, input the addresses of sectors to be erased and the erase code (in the sixth cycle of the command sequence) within 35 µs. If the erase code is input after 35 µs elapses, it will not be accepted due to the end of the sector erase wait time.
- The sector erase timer flag (DQ3) can be used to check whether it is valid to write sector erase codes continuously.
- Specify the address of a sector to be erased as the address at which the sector erase timer flag (DQ3) is read.

26.5.5.2 Flash Memory Sector Erase Procedure

- Hardware sequence flags can be used to check the state of the automatic algorithm in the Flash memory. Figure 26-3 gives an example of the Flash memory sector erase procedure. In this example, the toggle bit flag (DQ6) is used to check the end of sector erase.
- The toggle bit flag (DQ6) stops toggling the output at the same time as the execution timeout flag (DQ5) changes to "1". Check the toggle bit flag (DQ6) even when the execution timeout flag (DQ5) is "1".
- Since the data polling flag (DQ7) and the execution timeout flag (DQ5) are changed simultaneously, check the data polling flag (DQ7).

26.5.5.3 Note on Erasing Data from Sectors

If a hardware reset occurs while data is being erased, the integrity of data in the Flash memory is not guaranteed. Therefore, run the sector erase procedure again after a hardware reset occurs.

Figure 26-3. Sample Procedure for Erasing Data from Sectors in Flash Memory

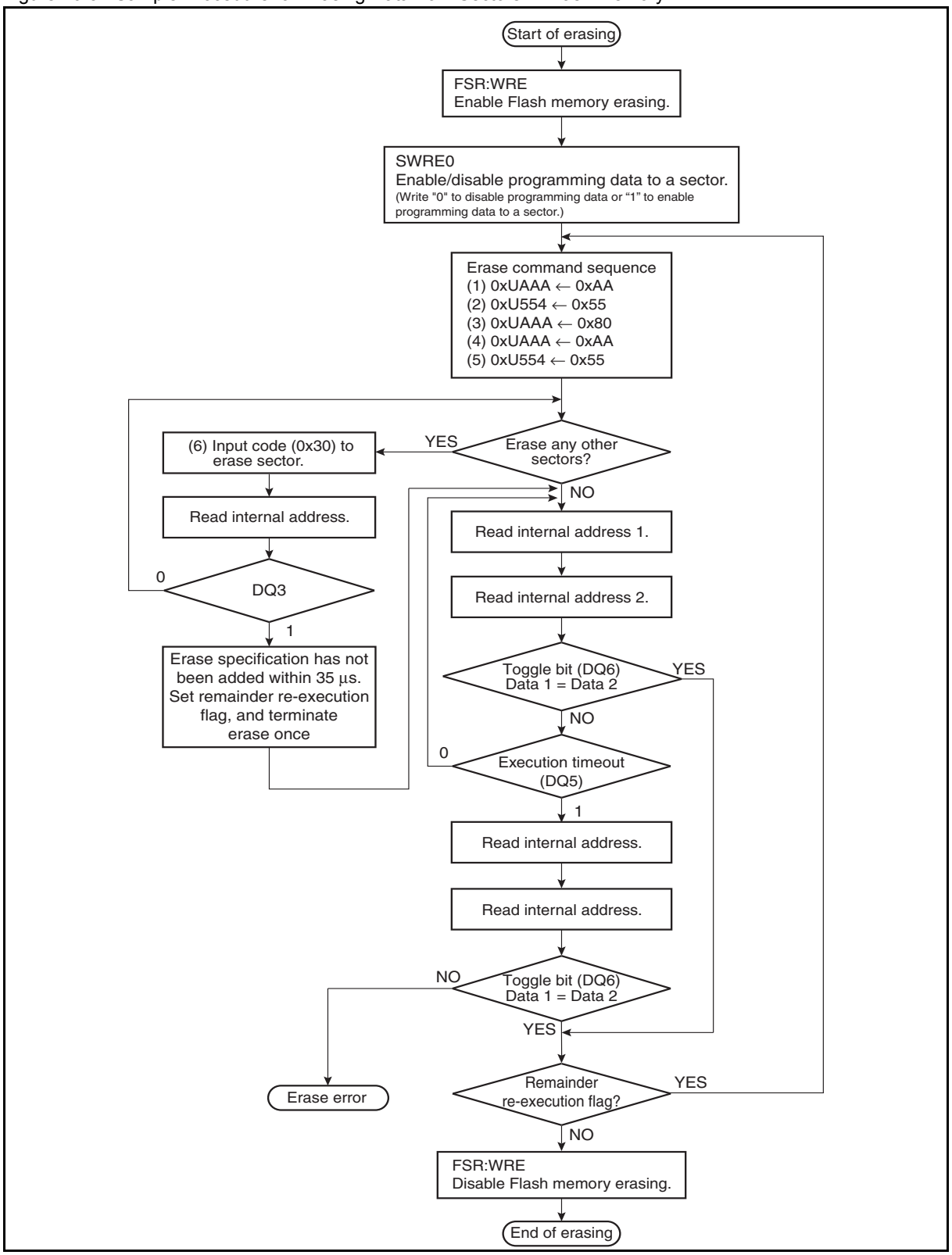

26.5.6 Suspending Sector Erase from Flash Memory

This section explains the procedure for entering the sector erase suspend command to suspend sector erase from the Flash memory. Data can be read from sectors not being erased.

26.5.6.1 Suspending Sector Erase from Flash Memory

- To suspend the Flash memory sector erase, send the sector erase suspend command mentioned in the command sequence table from the CPU to the Flash memory.
- The sector erase suspend command suspends the current sector erase operation, allowing data to be read from sectors that are not being erased.
- The sector erase suspend command is only enabled during the sector erase period including the erase wait time; it is ignored in chip erasing or programming.
- The sector erase suspend command is executed when the sector erase suspend code (0xB0) is written. Specify an address in the sector selected to be erased. If an attempt is made to execute the sector erase suspend command again when sector erase has been suspended, the new sector erase suspend command input is ignored.
- When a sector erase suspend command is input during the sector erase wait period, the sector erase wait time ends immediately, the sector erase operation is stopped, and the Flash memory enters the erase stop state.
- When a sector erase suspend command is input during sector erase after the sector erase wait period, the erase suspend state occurs after a maximum of 35 µs has elapsed since the issue of the sector erase suspend command.

Note:

To suspend sector erase by issuing a sector erase suspend command, issue the command after 35 µs + 2 MCLK (machine clock) or longer has elapsed since the issue of a sector erase command or a sector erase resume command.
To suspend sector erase command again after resuming sector erase by issuing a sector erase resume command, issue the command after 2 ms or longer has elapsed since the issue of the sector erase resume command.

26.5.7 Resuming Sector Erase of Flash Memory

This section explains the procedure for entering the sector erase resume command to resume suspended erasing of a sector in the Flash memory.

26.5.7.1 Resuming Sector Erase of Flash Memory

- To resume suspended sector erase, send the sector erase resume command mentioned in the command sequence table from the CPU to the Flash memory.
- The sector erase resume command resumes a sector erase operation suspended by the sector erase suspend command. The sector erase resume command is executed by writing erase resume code (0x30). Specify an address in the sector selected to be erased.
- A sector erase resume command input during sector erase is ignored.

26.5.8 Unlock Bypass Program

This sections explains details of the unlock bypass state.

26.5.8.1 Transiting from Normal Command State to Unlock Bypass State

If an unlock bypass program command is input in the normal command state, the Flash memory will transit to the unlock bypass state. In this state, a program command can be executed if the command is input within two cycles as mentioned in Table 26-1.

26.5.8.2 Returning from Unlock Bypass State to Normal Command State

If an unlock bypass reset command is input in the unlock bypass state, the Flash memory will return to the normal command state from the unlock bypass state. In addition, executing a hardware reset in the unlock bypass state will also make Flash memory return to the normal command state.

26.6 Operations

Pay attention in particular to the following points when using dual operation Flash memory:

- Interrupt generated when upper banks are updated
- Procedure of setting the sector swap enable bit in the flash memory status register (FSR:SSEN)

26.6.1 Interrupt Generated When Upper Banks Are Updated

The dual operation Flash memory consists of two banks. Like conventional Flash products, however, it cannot be erased/programmed and read at the same time in banks on the same side.

As SA3 contains an interrupt vector, an interrupt vector from the CPU cannot be read normally when an interrupt occurs during programming data to an upper bank. Before updating an upper bank, set the sector swap enable bit to "1" (FSR:SSEN = 1). When an interrupt occurs, therefore, SA1 is accessed to read interrupt vector data. Copy the same data to SA1 and SA3 before setting FSR:SSEN to "1".

26.6.2 Procedure for Setting Sector Swap Enable Bit (FSR:SSEN)

Figure 26-4. shows a sample procedure of setting the sector swap enable bit (FSR:SSEN).

To modify data in the upper bank, set FSR:SSEN to "1". While data is being written to the Flash memory, modifying the setting of FSR:SSEN is prohibited. The setting of FSR:SSEN can only be modified before the start of programming data to the Flash memory or after the completion of programming data to the Flash memory. In addition, control the Flash memory interrupts while setting FSR:SSEN as follows: before setting FSR:SSEN, disable the Flash memory interrupts; after setting FSR:SSEN, enable the interrupts.

Figure 26-4. Sample Procedure for Setting the Sector Swap Enable Bit (FSR:SSEN)

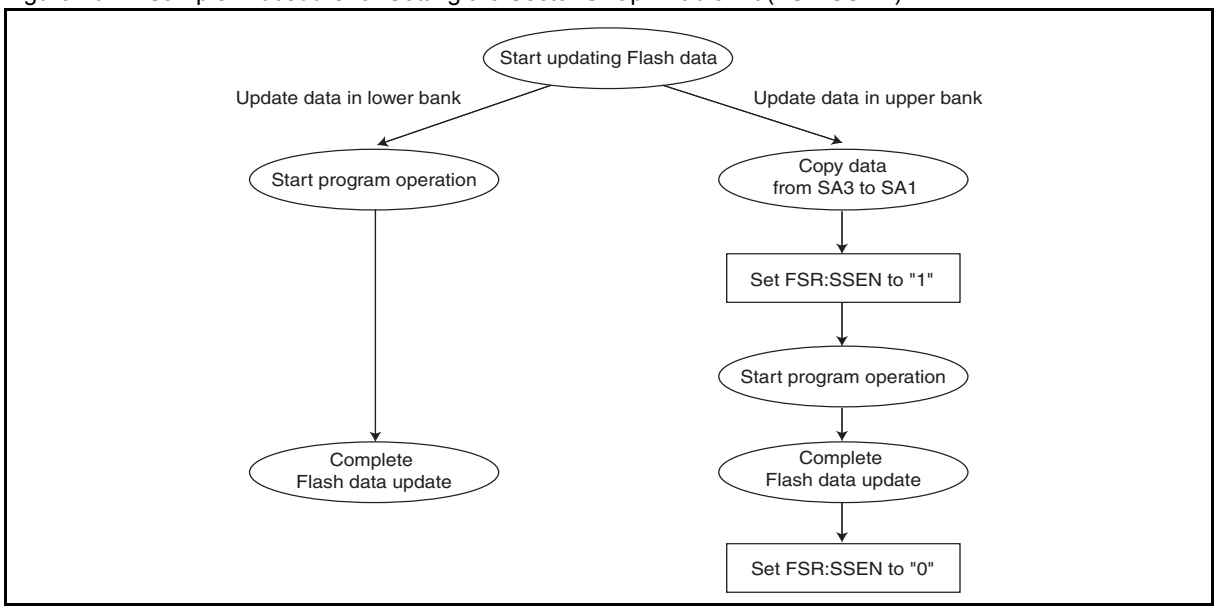

26.6.3 Operation during Programming/Erasing

It is prohibited to program data to the Flash memory within an interrupt routine when an interrupt occurs during Flash memory programming/erasing. When two or more program/erase routines exist, wait for one program/erase routine to finish before executing another program/erase routine.

While data is being written to or erased from the Flash memory, state transition in the current mode (clock mode or standby mode) is prohibited. Ensure that programming data to or erasing data from the Flash memory ends before state transition occurs.

26.7 Flash Security

The Flash security controller function prevents contents of the Flash memory from being read by external pins.

26.7.1 Flash Security

Writing protection code "0x01" to the Flash memory address (0xFFFC) restricts access to the Flash memory, disabling any read/write access to the Flash memory from any external pin. Once the protection of the Flash memory is enabled, the function cannot be unlocked until a chip erase command operation is executed.

It is advisable to write the protection code at the end of Flash programming to avoid enabling unnecessary protection during writing.

Once Flash security is enabled, a chip erase operation must be executed before data can be written to the Flash memory again.

26.8 Registers

This section describes the registers for the dual operation Flash memory.

Table 26-14. List of Dual Operation Flash Memory Registers

Register abbreviation	Register name	Reference
FSR2	Flash memory status register 2	26.8.1
FSR	Flash memory status register	26.8.2
SWRE0	Flash memory sector write control register 0	26.8.3
FSR3	Flash memory status register 3	26.8.4
FSR4	Flash memory status register 4	26.8.5

26.8.1 Flash Memory Status Register 2 (FSR2)

This section describes the Flash memory status register 2 (FSR2).

Register Configuration

bit	7	6	5	4	3	2	1	0
Field	PEIEN	PGMEND	PTIEN	PGMTO	EEIEN	ERSEND	ETIEN	ERSTO
Attribute	R/W	R/W	R/W	R/W	R/W	R/W	R/W	R/W
Initial value	0	0	0	0	0	0	0	0

Register Functions

[bit7] PEIEN: PGMEND interrupt enable bit

This bit enables or disables the generation of interrupt requests triggered by the completion of Flash memory programming.

bit7	Details
Writing "0"	Disables the interrupt request upon completion of Flash memory programming (FSR2:PGMEND = 1).
Writing "1"	Enables the interrupt request upon completion of Flash memory programming (FSR2:PGMEND = 1).

[bit6] PGMEND: PGMEND interrupt request flag bit

This bit indicates the completion of Flash memory programming.

The PGMEND bit is set to "1" upon completion of the Flash memory automatic algorithm.

An interrupt request is generated when the PGMEND bit is set to "1", provided that generating an interrupt request upon completion of Flash memory programming has been enabled (FSR2:PEIEN = 1).

When the PGMEND bit is set to "0" after Flash memory programming is completed, further Flash memory programming/erasing is disabled. Writing a reset command can make the Flash memory return to the normal command state.

When Flash memory programming fails (FSR3:HANG = 1), the PGMEND bit is cleared to "0".

Writing "0" to this bit clears it.

Writing "1" to this bit has no effect on operation.

When read by the read-modify-write (RMW) type of instruction, this bit always returns "1".

bit6	Details
Reading "0"	Indicates that the device is in the command input wait state or Flash memory programming is in progress.
Reading "1"	Indicates that Flash memory programming has been completed.
Writing "0"	Clears this bit.
Writing "1"	Has no effect on operation.

[bit5] PTIEN: PGMTO interrupt enable bit

This bit enables or disables the generation of interrupt requests triggered by the failure of Flash memory programming.

bit5	Details
Writing "0"	Disables the interrupt request upon failure of Flash memory programming (FSR2:PGMTO = 1).
Writing "1"	Enables the interrupt request upon failure of Flash memory programming (FSR2:PGMTO = 1).

[bit4] PGMTO: PGMTO interrupt request flag bit

This bit indicates that Flash memory programming has failed.

When Flash memory programming fails, the PGMTO bit is set to "1" upon completion of the Flash memory automatic algorithm. Afterward, further Flash memory programming/erasing is disabled. Writing a reset command can make the Flash memory return to the normal command state.

An interrupt request is generated when the PGMTO bit is set to "1", provided that generating an interrupt request upon failure of Flash memory programming has been enabled (FSR2:PTIEN = 1).

Writing "0" to this bit clears it.

Writing "1" to this bit has no effect on operation.

When read by the read-modify-write (RMW) type of instruction, this bit always returns "1".

bit4	Details
Reading "0"	Indicates that the device is in the command input wait state or Flash memory programming is in progress.
Reading "1"	Indicates that Flash memory programming has failed.
Writing "0"	Clears this bit.
Writing "1"	Has no effect on operation.

[bit3] EEIEN: ERSEND interrupt enable bit

This bit enables or disables the generation of interrupt requests triggered by the completion of Flash memory sector erase.

bit3	Details
Writing "0"	Disables the interrupt request upon completion of Flash memory sector erase (FSR2:ERSEND = 1).
Writing "1"	Enables the interrupt request upon completion of Flash memory sector erase (FSR2:ERSEND = 1).

[bit2] ERSEND: ERSEND interrupt request flag bit

This bit indicates the completion of Flash memory sector erase.

The ERSEND bit is set to "1" upon completion of the Flash memory automatic algorithm.

An interrupt request is generated when the ERSEND bit is set to "1", provided that generating an interrupt request upon completion of Flash memory sector erase has been enabled (FSR2:EEIEN = 1).

When the ERSEND bit is set to "0" after Flash memory sector erase is completed, further Flash memory programming/erasing is disabled. Writing a reset command can make the Flash memory return to the normal command state.

When Flash memory sector erase fails (FSR3:HANG = 1), the ERSEND bit is cleared to "0".

Writing "0" to this bit clears it.

Writing "1" to this bit has no effect on operation.

When read by the read-modify-write (RMW) type of instruction, this bit always returns "1".

bit2	Details
Reading "0"	Indicates that the device is in the command input wait state or Flash memory sector erase is in progress.
Reading "1"	Indicates that Flash memory sector erase has been completed.
Writing "0"	Clears this bit.
Writing "1"	Has no effect on operation.

[bit1] ETIEN: ERSTO interrupt enable bit

This bit enables or disables the generation of interrupt requests triggered by the failure of Flash memory sector erase.

bit1	Details
Writing "0"	Disables the interrupt request upon failure of Flash memory sector erase (FSR2:ERSTO = 1).
Writing "1"	Enables the interrupt request upon failure of Flash memory sector erase (FSR2:ERSTO = 1).

[bit0] ERSTO: ERSTO interrupt request flag bit

This bit indicates that Flash memory sector erase has failed.

When Flash memory sector erase fails, the ERSTO bit is set to "1" upon completion of the Flash memory automatic algorithm. Afterward, further Flash memory programming/erasing is disabled. Writing a reset command can make the Flash memory return to the normal command state.

An interrupt request is generated when the ERSTO bit is set to "1", provided that generating an interrupt request upon failure of Flash memory sector erase has been enabled (FSR2:ETIEN = 1).

Writing "0" to this bit clears it.

Writing "1" to this bit has no effect on operation.

When read by the read-modify-write (RMW) type of instruction, this bit always returns "1".

bit0	Details
Reading "0"	Indicates that the device is in the command input wait state or Flash memory sector erase is in progress.
Reading "1"	Indicates that Flash memory sector erase has failed.
Writing "0"	Clears this bit.
Writing "1"	Has no effect on operation.

26.8.2 Flash Memory Status Register (FSR)

This section describes the Flash memory status register (FSR).

Register Configuration

bit	7	6	5	4	3	2	1	0
Field	—	—	RDYIRQ	RDY	Reserved	IRQEN	WRE	SSEN
Attribute	—	—	R/W	R	W	R/W	R/W	R/W
Initial value	0	0	0	X	0	0	0	0

Register Functions

[bit7:6] Undefined bits

Their read values are always "0". Writing values to these bits has no effect on operation.

[bit5] RDYIRQ: Flash memory operation flag bit

This bit indicates the operating state of the Flash memory.

After the Flash memory programming/erasing is completed, the RDYIRQ bit is set to "1" at the point when the automatic algorithm of the Flash memory ends.

With the interrupt triggered by the completion of Flash memory programming/erasing having been enabled (FSR:IRQEN = 1), if the RDYIRQ bit is set to "1", an interrupt request occurs.

After Flash memory programming/erasing is completed, if the RDYIRQ bit has already been set to "0", further Flash memory programming/erasing is disabled. Writing a reset command can make the Flash memory return to the normal command state.

Writing "0" to this bit clears it.

Writing "1" to this bit has no effect on operation.

When read by the read-modify-write (RMW) type of instruction, this bit always returns "1".

bit5	Details
Reading "0"	Indicates that Flash memory programming/erasing is in progress.
Reading "1"	Indicates that Flash memory programming/erasing has been completed.
Writing "0"	Clears this bit.
Writing "1"	Has no effect on operation.

[bit4] RDY: Flash memory program/erase status bit

This bit indicates the program/erase status of the Flash memory.

When the RDY bit is "0", programming data into and erasing data from the Flash memory are disabled.

The read/reset command/sector erase suspend command can still be accepted when the RDY bit is "0". When programming or erasing ends, the RDY bit is set to "1".

After a program/erase command is issued, there is a delay of two machine clock (MCLK) cycles before the RDY bit becomes "0". After the issue of a program/erase command, wait for those two machine clock cycles to elapse (e.g. inserting NOP twice) before reading this bit.

bit4	Details
Reading "0"	Indicates that data is being programmed/erased. (Programming/erasing next data is disabled.)
Reading "1"	Indicates that data has been programmed/erased. (Programming/erasing next data is enabled.)

[bit3] Reserved bit

Always set this bit to "0".

[bit2] IRQEN: Flash memory program/erase interrupt enable bit

This bit enables or disables the generation of interrupt requests triggered by the completion of Flash memory programming/erasing.

bit2	Details
Writing "0"	Disables generating an interrupt upon completion of Flash memory programming/erasing.
Writing "1"	Enables generating an interrupt upon completion of Flash memory programming/erasing.

[bit1] WRE: Flash memory program/erase enable bit

This bit enables or disables the programming/erasing of data into/from the Flash memory area.

Set the WRE bit before invoking a Flash memory program/erase command.

Writing "0" to this bit disables generating program/erase signals even when a program/erase command is input.

Writing "1" to this bit enables programming/erasing Flash memory data after a program/erase command is input.

When not programming data into or erasing data from the Flash memory, set the WRE bit to "0" in order to prevent data from being accidentally written into or erased from the Flash memory.

To program data to the Flash memory, set FSR:WRE to "1" to enable programming data to the Flash memory, and set the flash memory sector write control register 0 (SWRE0) according to the Flash memory sector into which data is to be written. When Flash memory programming is disabled (FSR:WRE = 0), no write access to a sector in the Flash memory can be executed even though it has been enabled by setting a bit corresponding to that sector in the Flash memory sector write control register 0 (SWRE0) to "1".

bit1	Details
Writing "0"	Disables Flash memory area programming/erasing.
Writing "1"	Enables Flash memory area programming/erasing.

[bit0] SSEN: Sector swap enable bit

This bit is used to swap part of SA3 in the upper bank, at which interrupt vectors are kept, for SA1 in the lower bank.

bit0	Details
Writing "0"	Maps SA1 to 0x1800-0x1FFF, and the 2 Kbyte address area of SA3 to 0xF800-0xFFFF.
Writing "1"	Maps the 2 Kbyte address area of SA3 to 0x1800-0x1FFF, and SA1 to 0xF800-0xFFFF.

Figure 26-5. Access Sector Map by FSR:SSEN Value

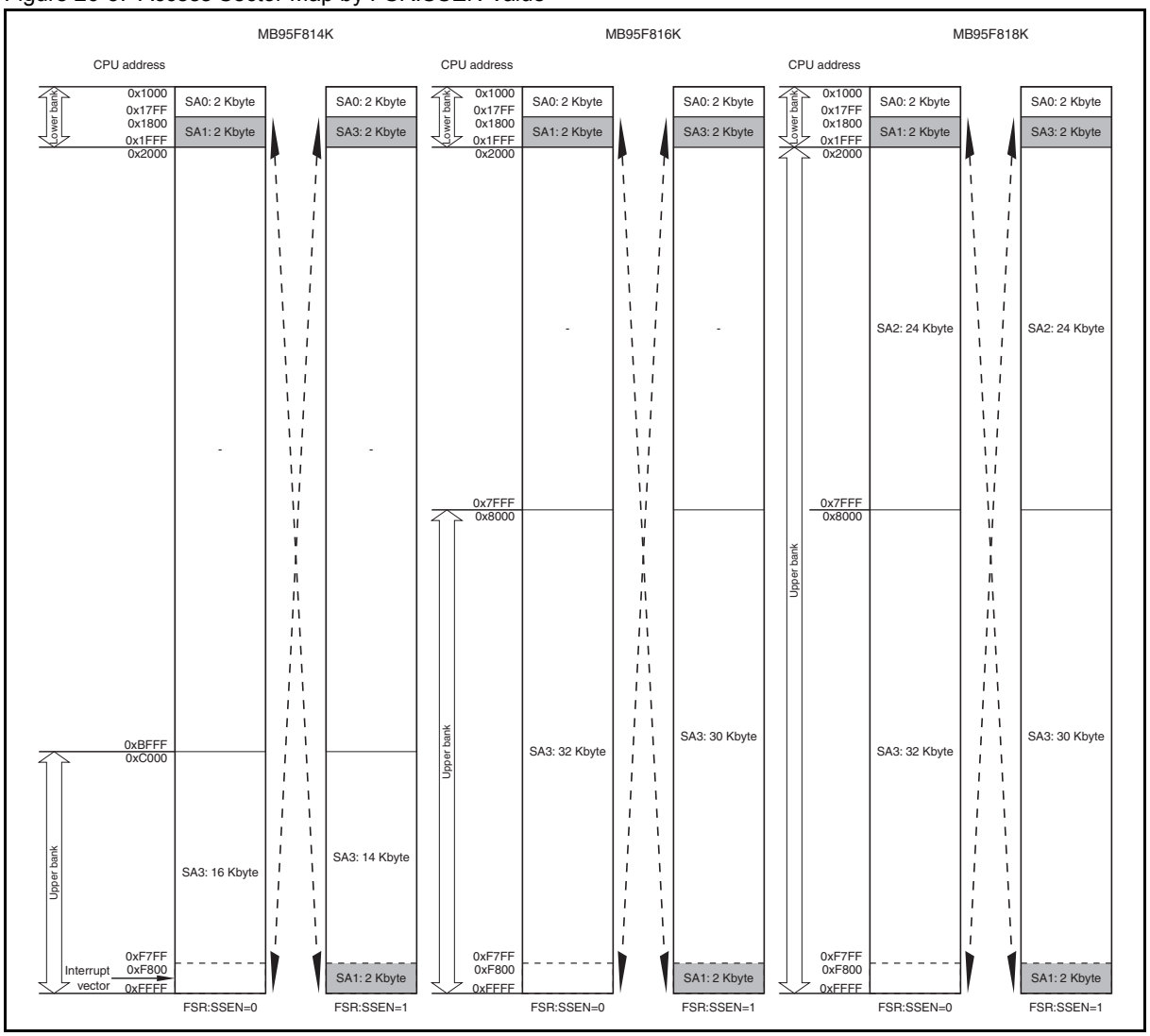

26.8.3 Flash Memory Sector Write Control Register 0 (SWRE0)

The flash memory sector write control register 0 (SWRE0) is installed in the Flash memory interface and used to set the function of protecting the Flash memory against spurious writes.

The flash memory sector write control register 0 (SWRE0) has bits for enabling/disabling programming data into individual sectors (SA0 to SA3). The initial value of each bit is "0", meaning programming data is disabled. Writing "1" to a bit in SWRE0 enables programming data into the sector corresponding to that bit. Writing "0" to a bit in SWRE0 prevents data from being accidentally written into the sector corresponding to that bit. When "0" is written to a bit in SWRE0, even though "1" is written to that bit afterward, data cannot be programmed into the sector corresponding to that bit. To re-program the data, execute a reset operation.

Only write data to SWRE0 by the byte. Setting the bits in SWRE0 using the bit manipulation instruction is prohibited.

Register Configuration

bit	7	6	5	4	3	2	1	0
Field	Reserved	Reserved	Reserved	Reserved	SA3E	SA2E	SA1E	SA0E
Attribute	W	W	W	W	R/W	R/W	R/W	R/W
Initial value	0	0	0	0	0	0	0	0

Register Functions

[bit7:4] Reserved bits

Always set these bits to "0".

[bit3:0] SA3E, SA2E, SA1E, SA0E: Programming function setup bits

These bits are used to set the function of preventing data from being accidentally written into a sector of the Flash memory. Writing "1" to a bit in SWRE0 enables programming data into the sector corresponding to that bit. Writing "0" to a bit in SWRE0 prevents data from being accidentally written into the sector corresponding to that bit. In addition, a reset initializes that bit to "0" (programming disabled).

Table of programming function setup bits and their corresponding Flash memory sectors	
Bit name	**Corresponding sector in Flash memory**
SA3E	SA3
SA2E	SA2
SA1E	SA1
SA0E	SA0

Settings of SAxE (x = 0, 1, 2 or 3) and their respective programming functions:

- Program-disabled (SAxE = 0)
  With "0" not written to the SAxE bit in the flash memory sector write control register 0 (SWRE0), programming data to a sector can be enabled by setting the SAxE bit corresponding to that sector to "1". (This is the state after a reset).
- Program-enabled (SAxE = 1)
  Data can be written to a sector corresponding to the SAxE bit.
- Spurious programming prevention (SAxE = 0)
  With "0" written to the SAxE bit in the flash memory sector write control register 0 (SWRE0), programming data to a sector cannot be enabled even though the SAxE bit corresponding to that sector is set to "1".

Figure 26-6. Examples of Flash Memory Program-disabled, Program-enabled, and Spurious Programming Prevention States Depending on Flash Memory Sector Write Control Register 0 (SWRE0)

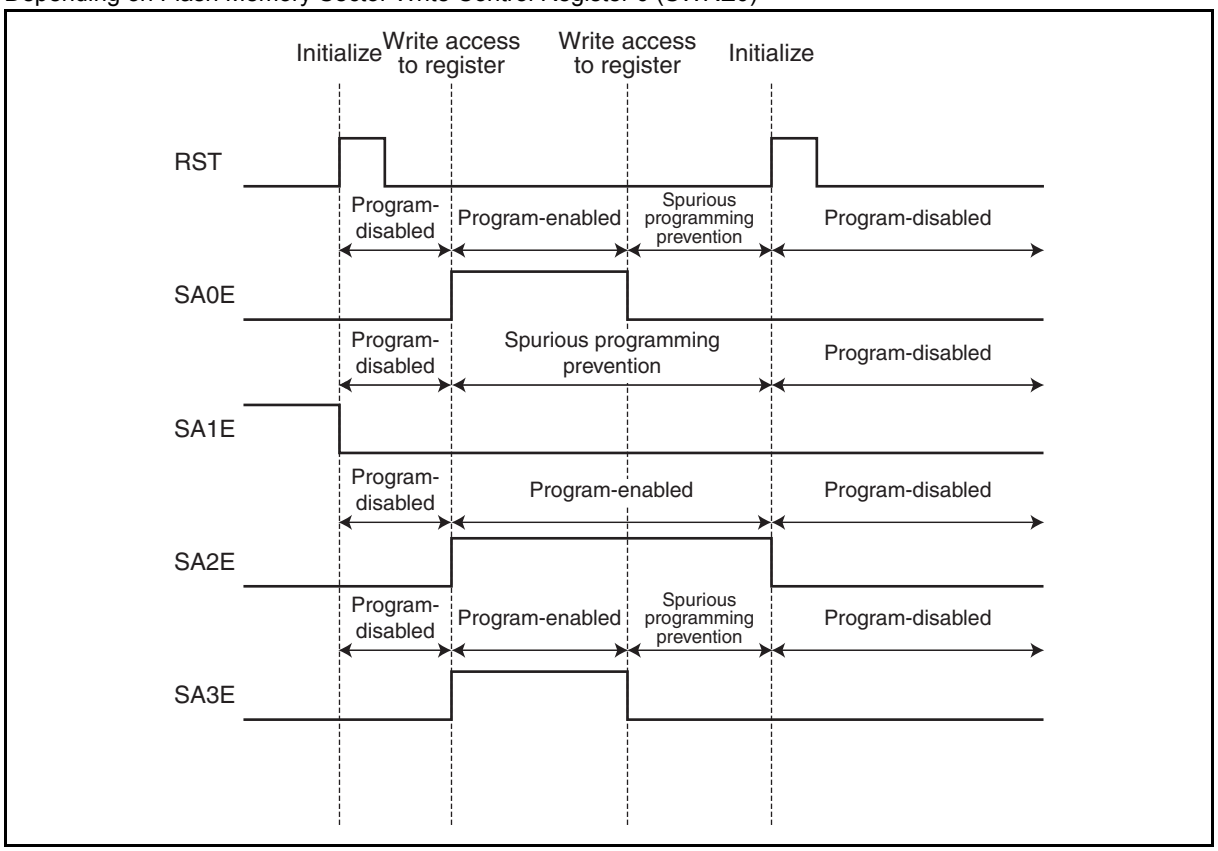

26.8.3.1 Note on Setting SWRE0 Register

To program data to or erase data from SA0 (0x1000 to 0x17FF) or SA1 (0x1800 to 0x1FFF) of the Flash memory when FSR:SSEN is "0", set both SA0E and SA1E in the SWRE0 register to "1" first.

To program data to or erase data when FSR:SSEN is "1", set SA0E, SA1E, SA2E and SA3E in the SWRE0 register to "1" first.

For details of the sector map of the Flash memory, see Figure 26-1. and Figure 26-5..

26.8.4 Flash Memory Status Register 3 (FSR3)

This section describes the flash memory status register 3 (FSR3).

Register Configuration

bit	7	6	5	4	3	2	1	0
Field	—	—	—	CERS	ESPS	SERS	PGMS	HANG
Attribute	—	—	—	R	R	R	R	R
Initial value	0	0	0	X	X	X	X	X

Register Functions

[bit7:5] Undefined bits

Their read values are always "0". Writing values to these bits has no effect on operation.

[bit4] CERS: Flash memory chip erase status bit

This bit indicates the chip erase status of the Flash memory.

bit4	Details
Reading "0"	Indicates that Flash memory chip erase has been completed.
Reading "1"	Indicates that Flash memory chip erase is in progress.

[bit3] ESPS: Flash memory sector erase suspend status bit

This bit indicates the sector erase suspend of the Flash memory.

bit3	Details
Reading "0"	Indicates that Flash memory sector erase suspend has been completed.
Reading "1"	Indicates that Flash memory sector erase suspend is in progress.

[bit2] SERS: Flash memory sector erase status bit

This bit indicates the sector erase status of the Flash memory.

bit2	Details
Reading "0"	Indicates that Flash memory sector erase has been completed.
Reading "1"	Indicates that Flash memory sector erase is in progress.

[bit1] PGMS: Flash memory program status bit

This bit indicates the program status of the Flash memory.

The PGMS bit will never be asserted under the condition that the machine clock (MCLK) cycle is longer than 1 µs. Use this bit with the machine clock (MCLK) cycle shorter than 1 µs.

bit1	Details
Reading "0"	Indicates that Flash memory program has been completed.
Reading "1"	Indicates that Flash memory program is in progress.

[bit0] HANG: Flash memory hang up status bit

This bit indicates whether the Flash memory has malfunctioned or not.

bit0	Details
Reading "0"	Indicates that no malfunction of command input has occurred so far.
Reading "1"	Indicates that a malfunction of command input has occurred.

26.8.5 Flash Memory Status Register 4 (FSR4)

This section describes of the flash memory status register 4 (FSR4).

Register Configuration

bit	7	6	5	4	3	2	1	0
Field	—	CEREND	CTIEN	CERTO	—	—	—	—
Attribute	—	R/W	R/W	R/W	—	—	—	—
Initial value	0	0	0	0	0	0	0	0

Register Functions

[bit7] Undefined bit

The read value of this bit is always "0". Writing a value to this bit has no effect on operation.

[bit6] CEREND: Flash memory chip erase completion status bit

This bit indicates the completion of Flash memory chip erase.

The CEREND bit is set to "1" upon completion of the Flash memory automatic algorithm.

When the CEREND bit is set to "0" after Flash memory chip erase is completed, further Flash memory programming/erasing is disabled. Writing a reset command can make the Flash memory return to the normal command state.

When Flash memory chip erase fails (FSR3:HANG = 1), this bit is cleared to "0".

Writing "0" to this bit clears it.

Writing "1" to this bit has no effect on operation.

When read by the read-modify-write (RMW) type of instruction, this bit always returns "1".

bit6	Details
Reading "0"	Indicates that the device is in the command input wait state or Flash memory chip erase is in progress.
Reading "1"	Indicates that Flash memory chip erase has been completed.
Writing "0"	Clears this bit.
Writing "1"	Has no effect on operation.

[bit5] CTIEN: CERTO interrupt enable bit

This bit enables or disables the generation of interrupt requests triggered by the failure of Flash memory chip erase.

bit5	Details
Writing "0"	Disables the interrupt request upon failure of Flash memory chip erase (FSR4:CERTO = 1).
Writing "1"	Enables the interrupt request upon failure of Flash memory chip erase (FSR4:CERTO = 1).

[bit4] CERTO: CERTO interrupt request flag bit

This bit indicates that Flash memory chip erase has failed.

When Flash memory chip erase fails, the CERTO bit is set to "1" upon completion of the Flash memory automatic algorithm.

An interrupt request is generated when the CERTO bit is set to "1", provided that generating an interrupt request upon failure of Flash memory chip erase has been enabled (FSR4:CTIEN = 1).

When the CERTO bit is set to "1" after Flash memory chip erase is completed, further Flash memory programming/erasing is disabled. Writing a reset command can make the Flash memory return to the normal command state.

Writing "0" to this bit clears it.

Writing "1" to this bit has no effect on operation.

When read by the read-modify-write (RMW) type of instruction, this bit always returns "1".

bit4	Details
Reading "0"	Indicates that the device is in the command input wait state or Flash memory chip erase is in progress.
Reading "1"	Indicates that Flash memory chip erase has failed.
Writing "0"	Clears this bit.
Writing "1"	Has no effect on operation.

[bit3:0] Undefined bits

Their read values are always "0". Writing values to these bits has no effect on operation.

26.8.5.1 *Examples of Status of Flash Memory Status Register 2, Flash Memory Status Register 3, Flash Memory Status Register 4 and RDY Bit (FSR:RDY)*

Figure 26-7. FSR2:PGMEND during Flash Memory Programming

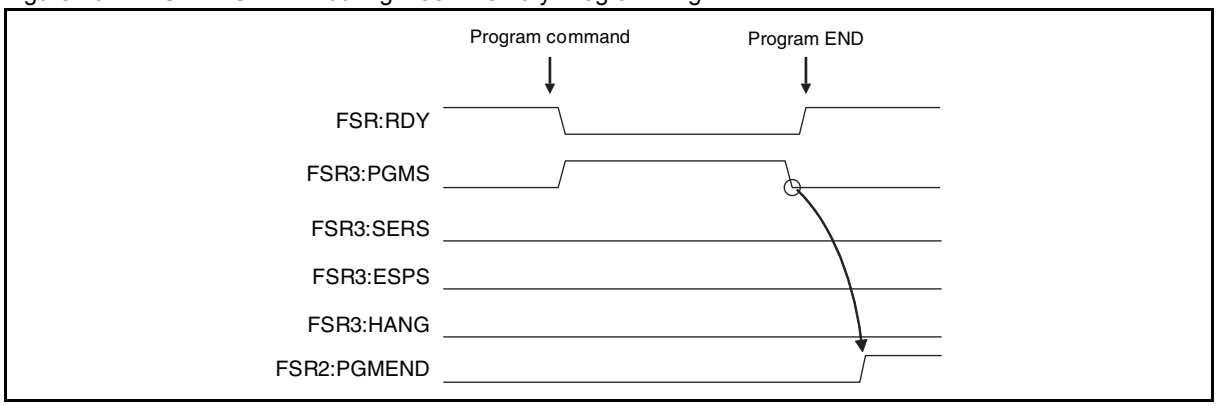

Figure 26-8. FSR2:PGMTO when Flash Memory Programming Failed

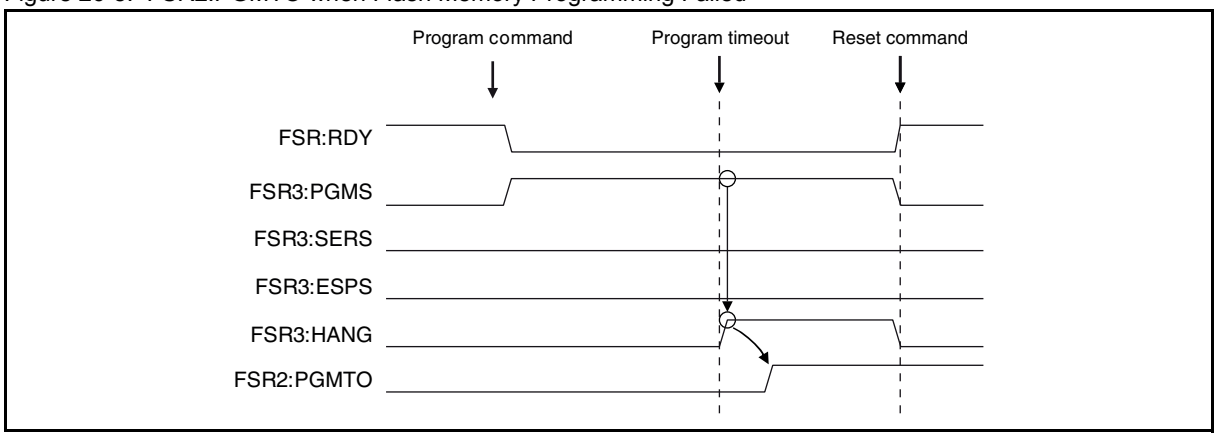

Figure 26-9. FSR2:ERSEND during Flash Memory Sector Erase

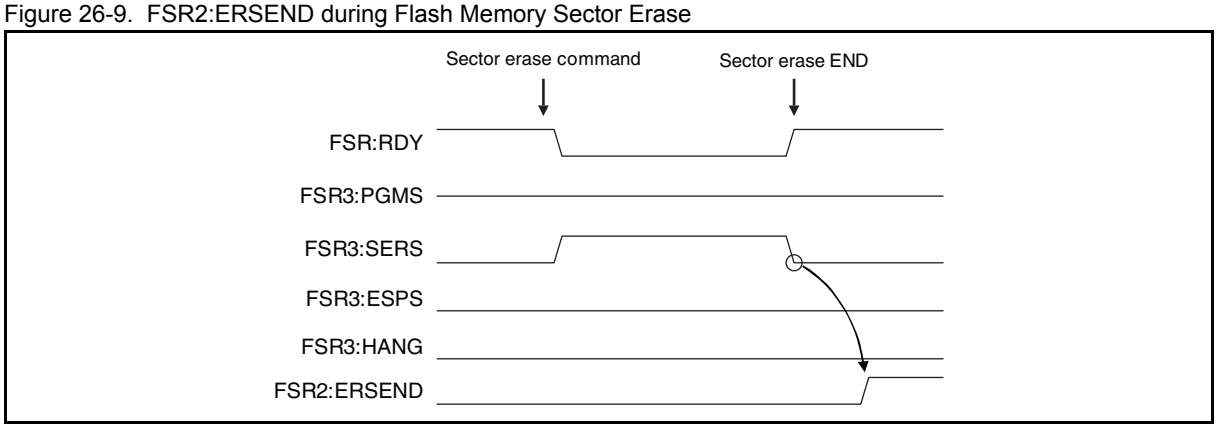

Figure 26-10. FSR2:ERSTO when Flash Memory Sector Erase Failed

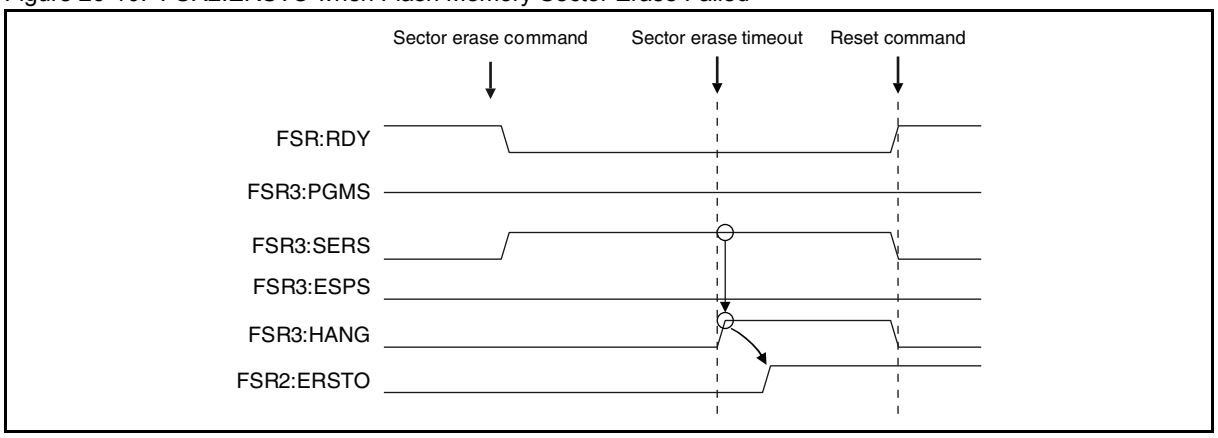

Figure 26-11. FSR2:PGMEND and FSR2:ERSEND when Flash Memory Programming Is in Progress with Flash Memory Sector Erase Suspended

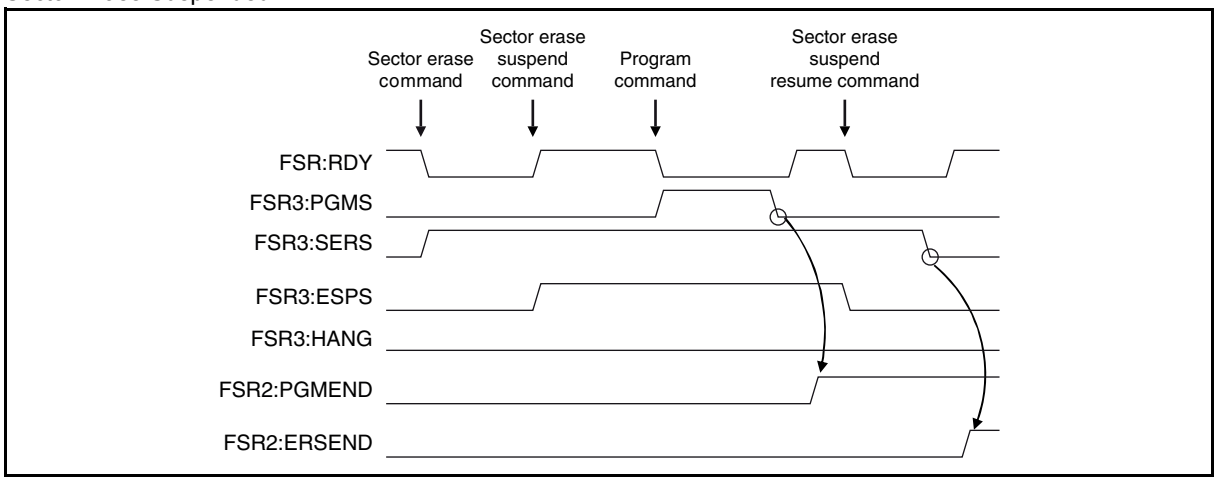

Figure 26-12. FSR2:PGMTO and FSR2:ERSEND when Flash Memory Programming Failed with Flash Memory Sector Erase Suspended

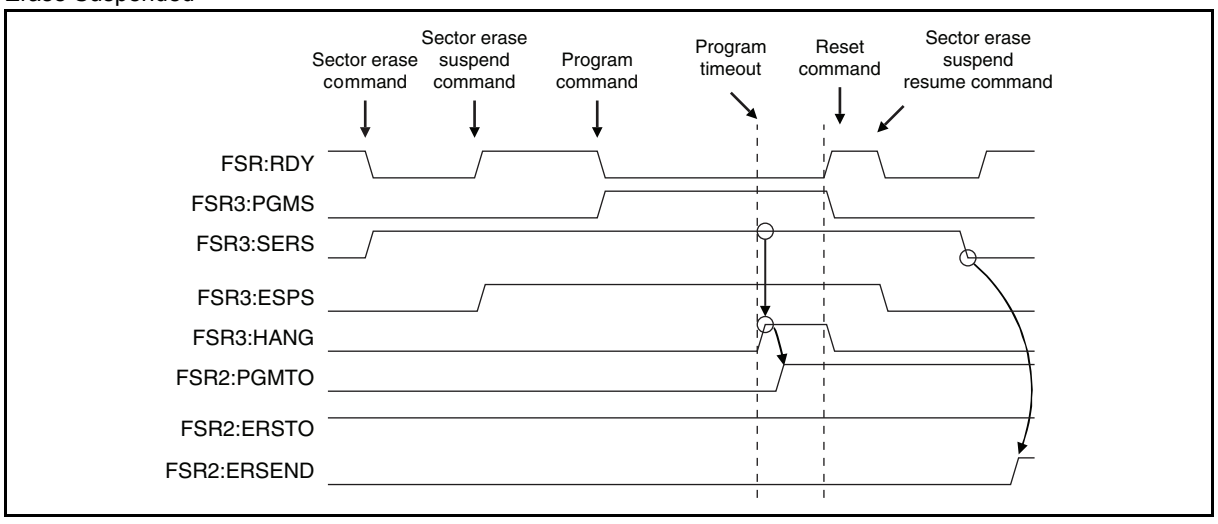

Figure 26-13. FSR2:ERSEND when Flash Memory Read Is in Progress with Flash Memory Sector Erase Suspended

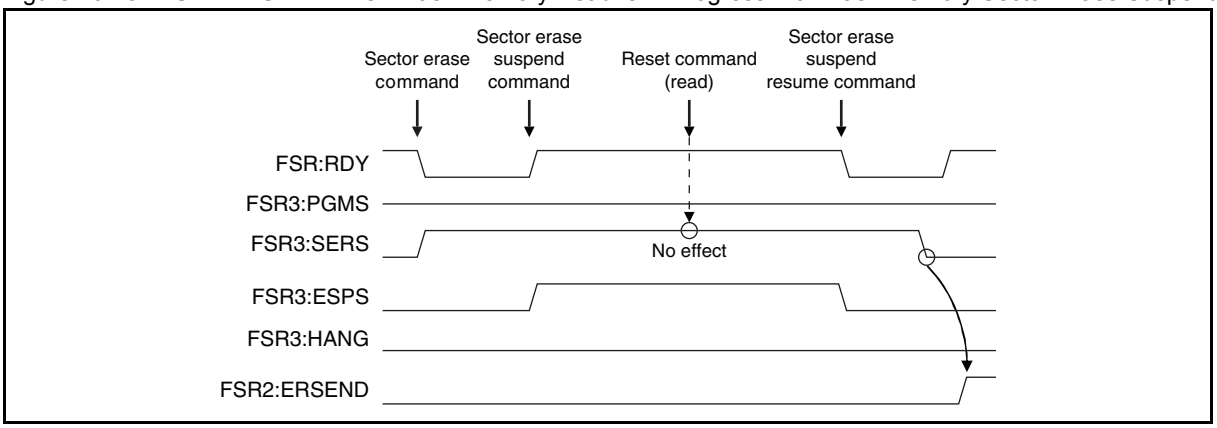

Figure 26-14. FSR2:PGMEND and FSR2:ERSTO when Flash Memory Sector Erase Failed after Sector Erase Has Resumed

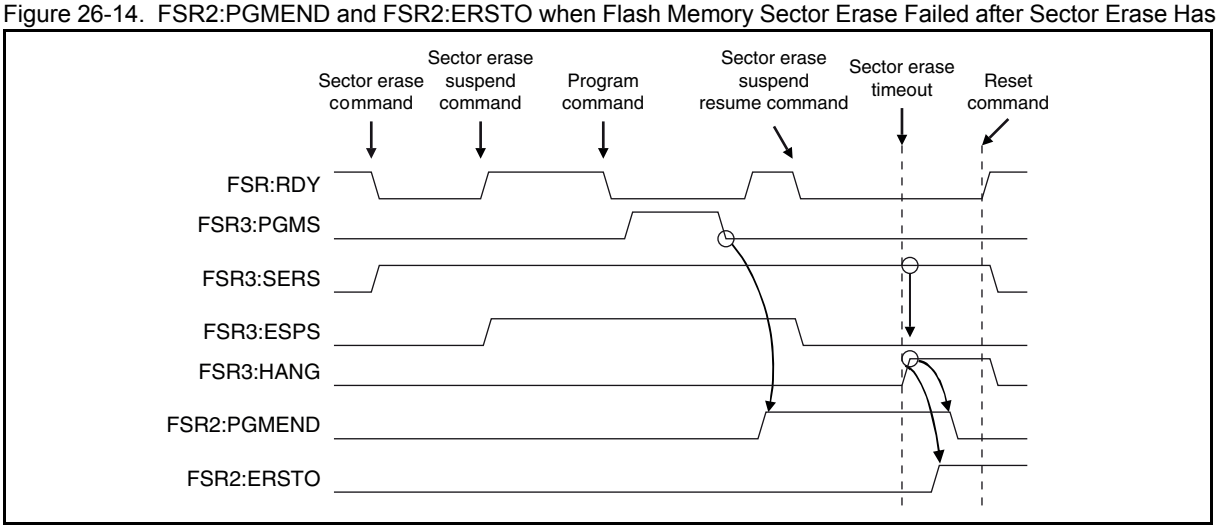

Figure 26-15. FSR4:CERTO when Chip Erase Failed

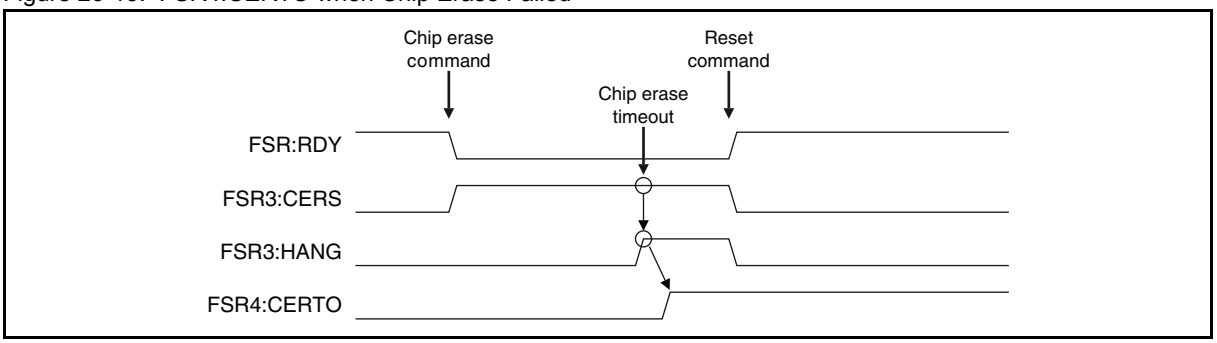

Figure 26-16. FSR4:CEREND during Chip Erase

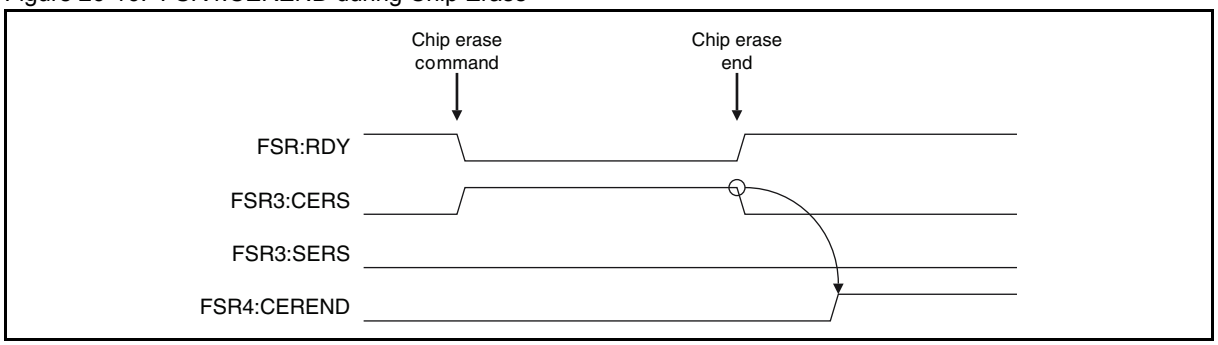

26.8.5.2 Flash Memory Sector Write Control Register 0 (SWRE0) Setup Flow Chart

Set the FSR:WRE bit to "1" to enable Flash memory programming, then enable or disable programming data into a sector by setting the corresponding bit in the SWRE0 register to "1" or "0" respectively.

Figure 26-17. Sample Procedure for Enabling/Disabling Flash Memory Programming

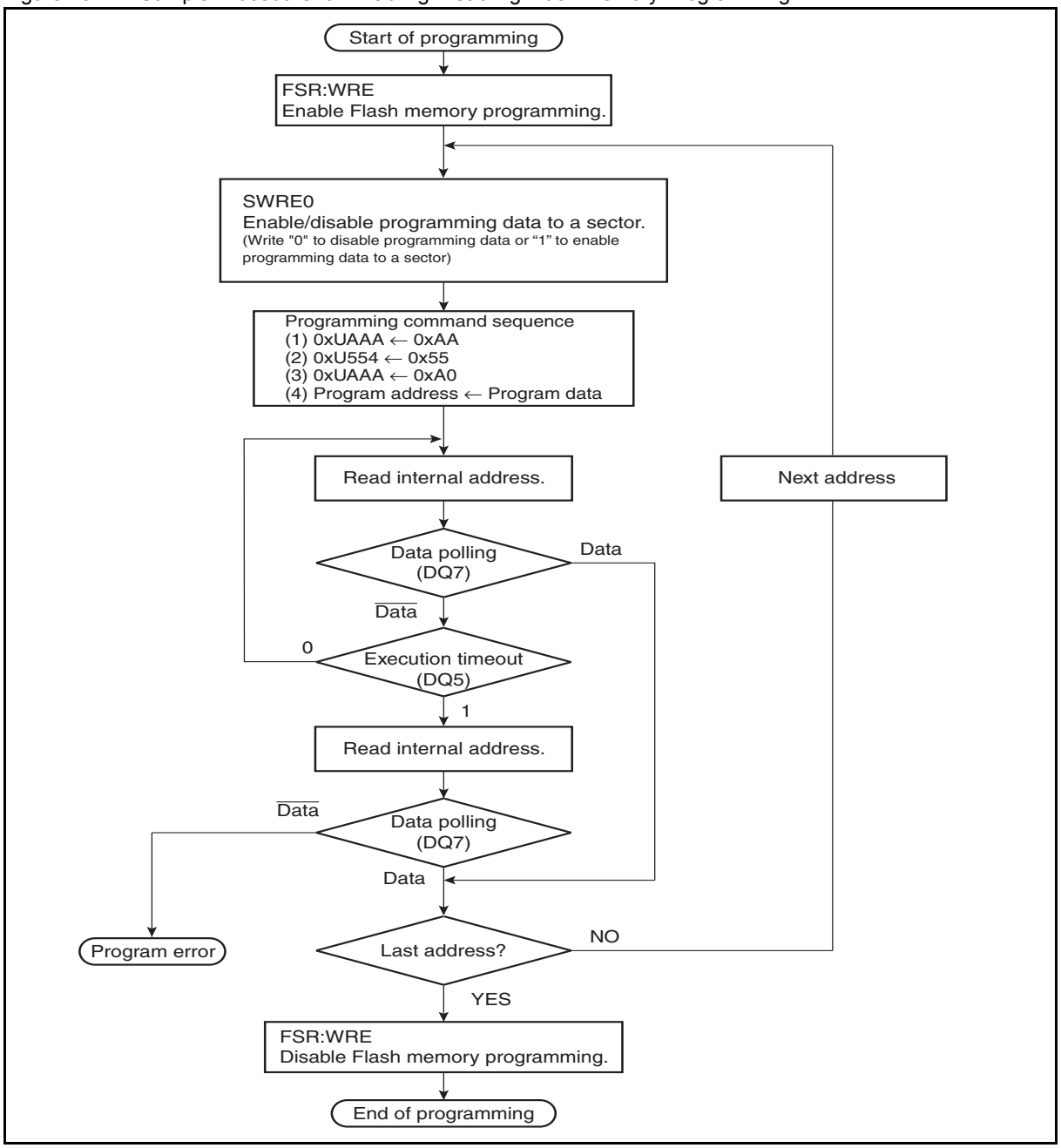

26.8.5.3 *Note on Setting (FSR:WRE)*

To program data to the Flash memory, set the WRE bit to "1" to enable Flash memory programming and then set the bit in the SWRE0 register corresponding to a sector to which data is to be written. When Flash memory programming is disabled by setting the WRE bit to "0", no write access to a sector in the Flash memory can be executed even though it has been enabled by setting a bit corresponding to that sector in the SWRE0 register to "1".

26.9 Notes on Using Dual Operation Flash Memory

This section provides notes on using the dual operation Flash memory.

26.9.1 Restriction on Using Toggle Bit Flag (DQ6)

When using the dual-operation Flash memory (The Flash memory write control program is executed on the Flash memory), the toggle bit flag (DQ6) cannot be used to check the operating state of the Flash memory during programming or erasing. Therefore, use the data polling flag (DQ7) to check the internal operating state of the Flash memory after programming data to the Flash memory or erasing data from the Flash memory as shown in the examples in Figure 26-2 and Figure 26-3.

The restriction above does not apply if the Flash memory write control program is executed on the RAM.

27. Non-Volatile Register (NVR) Interface

This chapter describes the functions and operations of the NVR interface.

27.1 Overview

27.2 Configuration

27.3 Registers

27.4 Notes on Main CR Clock Trimming

27.5 Notes on Using NVR Interface

27.1 Overview

The NVR (Non-Volatile Register) area is a reserved area in the Flash that stores system information and option settings. After a reset, data in the NVR Flash area will be fetched and stored in registers in the NVR I/O area. In the MB95810K Series, the NVR interface is used to store the following data:

- Coarse trimming value for main CR Clock (5 bits)
- Fine trimming value for main CR Clock (5 bits)
- Watchdog timer selection ID (16 bits)
- Temperature dependent adjustment value for main CR clock (5 bits)

27.1.1 Functions of NVR Interface

Functions of the NVR interface are as follows:

1. The NVR interface retrieves all data from the NVR Flash area and stores it in the registers in the NVR I/O area after a reset. See Figure 27-1 and Figure 27-2.
2. The NVR interface enables the user to know the value of the initial CR trimming setting.
3. The NVR interface enables the user to select the hardware watchdog timer or software watchdog timer by modifying the 16-bit watchdog timer selection ID. The watchdog timer selection ID cannot be modified while the CPU is running.

Figure 27-1 shows the retrieval of NVR during a reset.

Figure 27-1. Retrieval of NVR during Reset

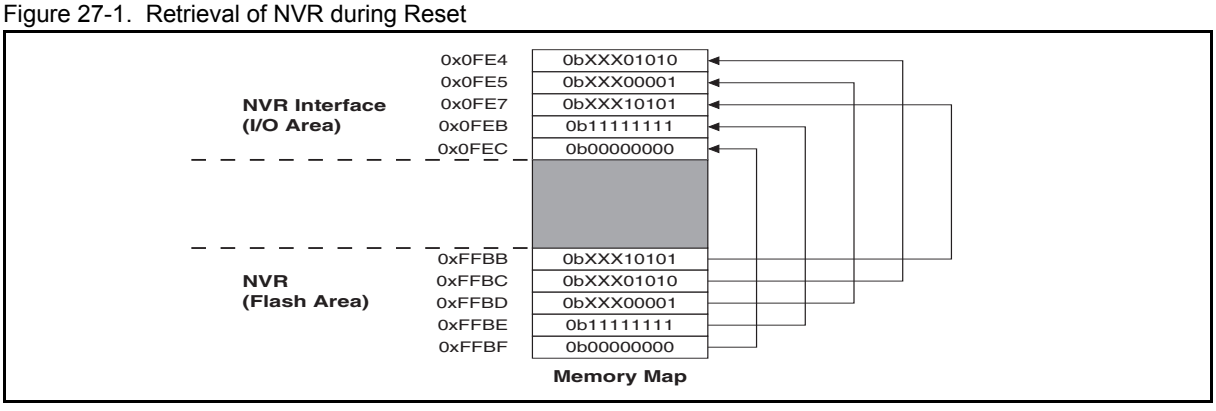

27.2 Configuration

The NVR interface consists of the following blocks:

- Trimming of Main CR Clock (CRTH and CRTL)
- Watchdog Timer Selection ID (WDTH and WDTL)
- Main CR Temperature Dependent Adjustment (CRTDA)

27.2.1 Block Diagram of NVR Interface

Figure 27-2. Block Diagram of NVR Interface

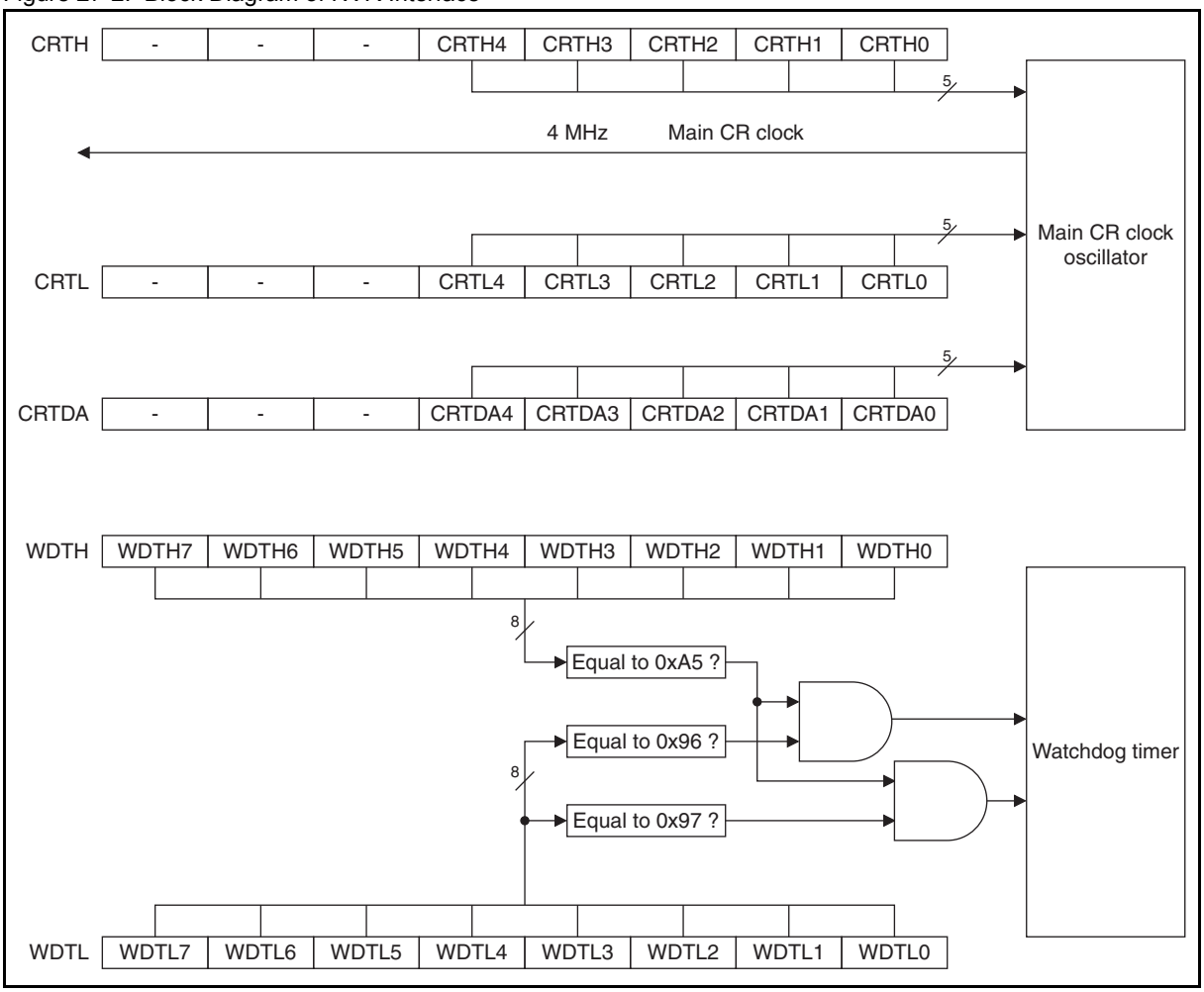

27.3 Registers

This section lists the registers of the NVR interface.

Table 27-1. List of NVR Interface Registers

Register abbreviation	Register name	Reference
CRTH	Main CR clock trimming register (upper)	27.3.1
CRTL	Main CR clock trimming register (lower)	27.3.2
CRTDA	Main CR clock temperature dependent adjustment register	27.3.3
WDTH	Watchdog timer selection ID register (upper)	27.3.4
WDTL	Watchdog timer selection ID register (lower)	27.3.4

27.3.1 Main CR Clock Trimming Register (Upper) (CRTH)

This section describes the main CR clock trimming register (upper) (CRTH).

Register Configuration

bit	7	6	5	4	3	2	1	0
Field	—	—	—	CRTH4	CRTH3	CRTH2	CRTH1	CRTH0
Attribute	—	—	—	R/W	R/W	R/W	R/W	R/W
Initial value	0	0	0	X	X	X	X	X

Register Functions

[bit7:5] Undefined bits

Their read values are always "0". Writing values to these bits has no effect on operation.

[bit4:0] CRTH[4:0]: Main CR clock coarse trimming bits

The settings of these bits are loaded from the Flash address 0xFFBC (bit4:0) after a reset. Their initial values are determined by the pre-loaded values in the NVR Flash area.

Coarse trimming modifies the main CR clock frequency with a bigger step. Increasing the coarse trimming value decreases the main CR clock frequency.

bit4:0	Details
Writing "00000"	Highest main CR clock frequency
:	:
Writing "11111"	Lowest main CR clock frequency

See 27.4 Notes on Main CR Clock Trimming and 27.5 Notes on Using NVR Interface for details of main CR clock trimming and notes on changing the main CR clock values respectively.

27.3.2 Main CR Clock Trimming Register (Lower) (CRTL)

This section describes the main CR clock trimming register (lower) (CRTL).

Register Configuration

bit	7	6	5	4	3	2	1	0
Field	—	—	—	CRTL4	CRTL3	CRTL2	CRTL1	CRTL0
Attribute	—	—	—	R/W	R/W	R/W	R/W	R/W
Initial value	0	0	0	X	X	X	X	X

Register Functions

[bit7:5] Undefined bits

Their read values are always "0". Writing values to these bits has no effect on operation.

[bit4:0] CRTL[4:0]: Main CR clock fine trimming bits

The settings of these bits are loaded from the Flash address 0xFFBD (bit4:0) after a reset. Their initial values are determined by the pre-loaded values in the NVR Flash area.

Fine trimming modifies the main CR clock frequency with a smaller step. Increasing the fine trimming value decreases the main CR clock frequency.

bit4:0	Details
Writing "00000"	Highest main CR clock frequency
:	:
Writing "11111"	Lowest main CR clock frequency

See 27.4 Notes on Main CR Clock Trimming and 27.5 Notes on Using NVR Interface for details of main CR clock trimming and notes on changing the main CR clock values respectively.

27.3.3 Main CR Clock Temperature Dependent Adjustment Register (CRTDA)

This section describes the main CR clock temperature dependent adjustment register (CRTDA).

Register Configuration

bit	7	6	5	4	3	2	1	0
Field	—	—	—	CRTDA4	CRTDA3	CRTDA2	CRTDA1	CRTDA0
Attribute	—	—	—	R/W	R/W	R/W	R/W	R/W
Initial value	0	0	0	X	X	X	X	X

Register Functions

[bit7:5] Undefined bits

Their read values are always "0". Writing values to these bits has no effect on operation.

[bit4:0] CRTDA[4:0]: Main CR clock temperature dependent adjustment bits

These bits are loaded from the Flash address 0xFFBB (bit4:0) after a reset. Their initial values are determined by the pre-load values in the NVR Flash area.

Temperature dependent adjustment maintains the accuracy of the main CR output frequency within a temperature range. It works in combination with the coarse trimming settings in the CRTH register and the fine trimming settings in the CRTL register. In addition, increasing the value of the CRTDA register decreases the main the main CR clock frequency.

bit4:0	Details
Writing "00000"	Highest main CR clock frequency
:	:
Writing "11111"	Lowest main CR clock frequency

See 27.4 Notes on Main CR Clock Trimming and 27.5 Notes on Using NVR Interface for details of main CR clock trimming and notes on changing the main CR clock values respectively.

27.3.4 Watchdog Timer Selection ID Register (Upper/Lower) (WDTH/WDTL)

This section describes the watchdog timer selection ID register (upper/lower) (WDTH/WDTL).

Register Configuration

WDTH

bit	7	6	5	4	3	2	1	0
Field	WDTH7	WDTH6	WDTH5	WDTH4	WDTH3	WDTH2	WDTH1	WDTH0
Attribute	R	R	R	R	R	R	R	R
Initial value	X	X	X	X	X	X	X	X

WDTL

bit	7	6	5	4	3	2	1	0
Field	WDTL7	WDTL6	WDTL5	WDTL4	WDTL3	WDTL2	WDTL1	WDTL0
Attribute	R	R	R	R	R	R	R	R
Initial value	X	X	X	X	X	X	X	X

27.3.4.1 Functions of WDTH Register

[bit7:0] WDTH[7:0]: Watchdog timer selection ID (upper) bits

These bits are loaded from the Flash address 0xFFBE (bit7:0) after a reset. The initial values are determined by the pre-loaded values in the NVR Flash area.

These bits cannot be modified while the CPU is running.

See Table 27-2 for watchdog timer selection.

See 27.5 Notes on Using NVR Interface for notes on writing NVR values.

27.3.4.2 Functions of WDTL Register

[bit7:0] WDTL[7:0]: Watchdog timer selection ID (lower) bits

These bits are loaded from the Flash address 0xFFBF (bit7:0) after a reset. The initial values are determined by the pre-loaded values in the NVR Flash area.

These bits cannot be modified while the CPU is running.

See Table 27-2 for watchdog timer selection.

See 27.5 Notes on Using NVR Interface for notes on writing NVR values.

Table 27-2. Watchdog Timer Selection Id

WDTH[7:0], WDTL[7:0]	Function
0xA596	The hardware watchdog timer is disabled; the software watchdog timer is enabled.
0xA597	The hardware watchdog timer is enabled; the software watchdog timer is disabled. The hardware watchdog timer can be stopped in all standby modes (stop mode, sleep mode, time-base timer mode and watch mode).
Other than the above	The hardware watchdog timer is enabled; the software watchdog timer is disabled. The hardware watchdog timer keeps operating in all standby modes (stop mode, sleep mode, time-base timer mode and watch mode).

27.4 Notes on Main CR Clock Trimming

This section provides notes on main CR clock trimming.

After a hardware reset, the 10-bit main CR clock trimming value and the 5-bit temperature dependent adjustment value will be loaded from the NVR Flash area to registers in the NVR I/O area.

Table 27-3 shows the step size of main CR clock trimming.

Table 27-3. Step Size of Main CR Clock Trimming

Function	Coarse trimming value CRTH[4:0]	Fine trimming value CRTL[4:0]
To achieve the minimum frequency	0b11111	0b11111
To achieve the maximum frequency	0b00000	0b00000
Step Size	220 kHz to 300 kHz	14 kHz to 20 kHz

The relationship between main CR clock frequency and trimming step size is shown in the diagram below.

Figure 27-3. Relationship between Main CR Clock Frequency and Trimming Step Size (with CRTDA[4:0] = 0b10000)

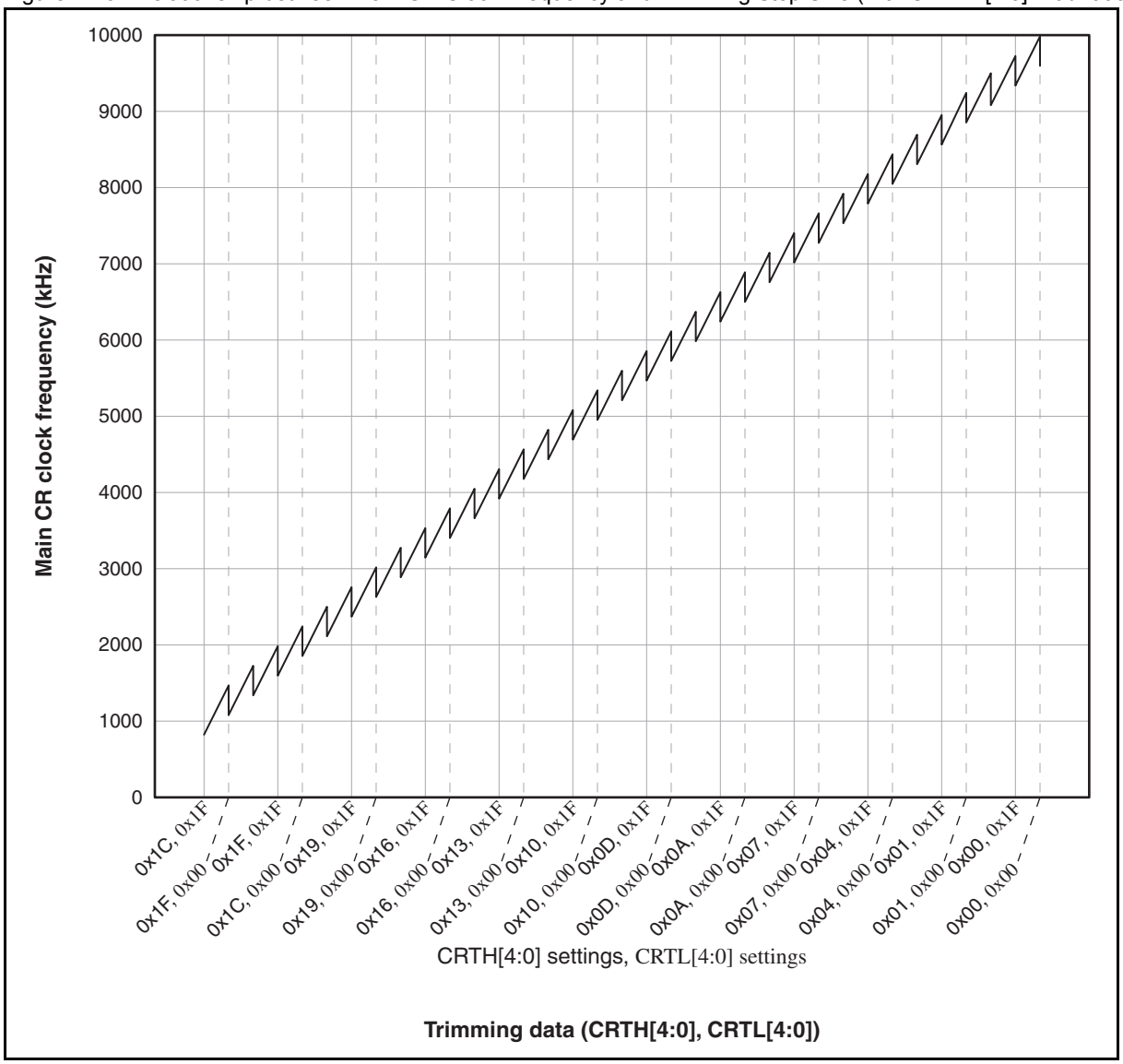

27.5 Notes on Using NVR Interface

This section provides notes on using the NVR interface.

27.5.1 Note on Changing Main CR Frequency

Please note that the NVR interface does not program a modified value to the NVR Flash area. To modify the CRTH, CRTL and CRTDA registers, program their new values to the NVR Flash with the Flash writer.

27.5.2 Note on Flash Erase and Trimming Value

- A Flash erase operation will erase all NVR data.

The Flash writer carries out the following procedure to keep original system settings.

1. Make a backup of data in CRTH:CRTH[4:0], CRTL:CRTL[4:0] and CRTDA:CRTDA[4:0].
2. Erase the Flash.
3. Restore all data in CRTH:CRTH[4:0], CRTL:CRTL[4:0] and CRTDA:CRTDA[4:0] to the NVR Flash area.

If there is new data in CRTH:CRTH[4:0], CRTL:CRTL[4:0] and CRTDA:CRTDA[4:0], the Flash writer will program the new data to the NVR Flash area.

- The trimming value has been preset before this device is shipped. If the preset trimming value is modified after the device has been shipped, Cypress does not warrant proper operation of the device with respect to use based on the modified trimming value.
- If the Flash operation is performed by the user program code, restore the original trimming data to the NVR Flash area by the user program code. Otherwise, the trimming value, which has been preset before this device is shipped, is erased by the Flash erase operation.

28. Comparator

This chapter describes the functions and operations of the comparator.

28.1 Overview

28.2 Configuration

28.3 Dedicated BGR

28.4 Pins

28.5 Interrupt

28.6 Operations and Setting Procedure Example

28.7 Register

28.1 Overview

The comparator monitors the two analog input voltages, and automatically generates an interrupt upon detection of a change in the edge of comparator output.

28.1.1 Function of Comparator

The function of the comparator is to monitor the two analog input voltages and compare them. Using the voltage of the inverting analog input (negative input) or of the dedicated BGR as a reference voltage, the comparator outputs "H" if the voltage of the non-inverting analog input voltage (positive input) is higher than the reference voltage; otherwise, it outputs "L". In addition, upon detection of a rising edge or falling edge of the comparator output, the comparator outputs a corresponding interrupt.

28.2 Configuration

The comparator module consists of the following blocks:

- Comparator
- Edge detection circuit
- Comparator control register ch. n (CMRn)

The number of pins and that of channels of the comparator vary among products. For details, refer to the device data sheet.

In this chapter, "n" in a pin name and a register abbreviation represents the channel number. For details of pin names, register names and register abbreviations of a product, refer to the device data sheet.

28.2.1 Block Diagram of Comparator

Figure 28-1. Block Diagram of Comparator

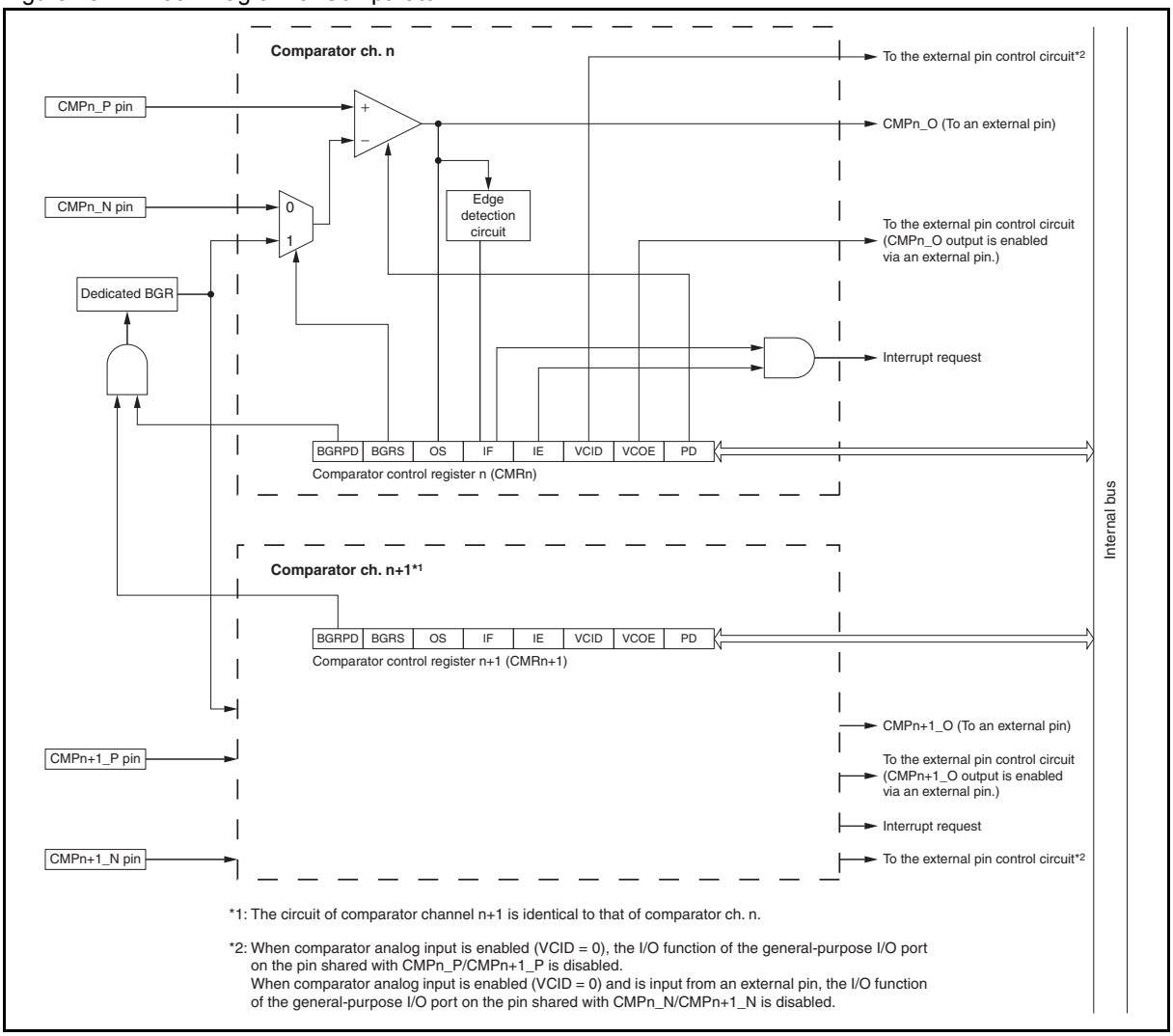

- Comparator

The comparator monitors the voltages of two external analog inputs and compares them. Using the voltage of the inverting analog input (negative input) or the dedicated BGR as a reference voltage, the comparator outputs "H" if the voltage of the non-inverting analog input (positive input) is higher than the reference voltage; otherwise, it outputs "L".

- Edge detection circuit

Except in stop mode, watch mode or time-base timer mode, upon detection of a rising edge or falling edge of comparator output, the edge detection circuit automatically raises the interrupt flag (CMRn:IF).

- Comparator control register ch. n (CMRn)

This register has the following functions:

1. To power up or power down the comparator (CMRn:PD)
2. To enable or disable comparator output (CMRn:VCOE)
3. To enable or disable comparator analog input (CMRn:VCID)
4. To power up or power down the dedicated BGR (CMRn:BGRPD)
5. To select the comparator reference voltage source (CMRn:BGRS)

Except in stop mode, watch mode or time-base timer mode, if the interrupt request enable bit (IE) in the CMRn register has been set to "1", upon detection of a rising edge or falling edge of comparator output, the comparator generates an interrupt request, and the output edge detection interrupt flag bit (IF) in the CMRn register is automatically set to "1" at the same time.

The output status of a comparator can be read through the output status bit (OS) in the CMRn register.

28.3 Dedicated BGR

This section describes the function of the dedicated BGR.

28.3.1 Function of Dedicated BGR

The dedicated BGR is a reference voltage generation circuit that outputs an analog voltage to the comparator.

Note:

The comparator has only one dedicated BGR, which is shared by all channels of the comparator. The dedicated BGR is enabled when a channel uses it. The dedicated BGR can be powered down when the BGRPD bit (CMRn:BGRPD) of each channel is set to "1".

28.4 Pins

This section describes the pins of the comparator.

28.4.1 Pins of Comparator

Table 28-1 shows details of the pins of the comparator.

Table 28-1. Pins of Comparator

Pin name	Pin function
CMPn_P	Comparator non-inverting analog input (positive input)
CMPn_N	Comparator inverting analog input (negative input)
CMPn_O	Comparator digital output

28.5 Interrupt

The comparator generates an interrupt called output edge detection interrupt. An interrupt request number and an interrupt vector are assigned to the interrupt.

28.5.1 Output Edge Detection Interrupt

Table 28-2 shows details of the output edge detection interrupt.

Table 28-2. Details of Output Edge Detection Interrupt

Item	Details
Interrupt generating condition	An output rising edge or output falling edge occurs.
Interrupt flag	CMRn:IF
Interrupt enable bit	CMRn:IE

Note:

In stop mode, watch mode or time-base timer mode, the edge detection circuit stops operating, and the IF bit in the comparator control register ch. n (CMRn) is not to be updated even if the comparator has been turned on.

28.6 Operations and Setting Procedure Example

The comparator can be activated by the software according to the setting of the PD bit in the CMRn register.

28.6.1 Software Activation of Comparator (With Analog Input from External Pin)

To activate the comparator with analog input from an external pin, do the settings shown in Figure 28-2.

Figure 28-2. Settings for Activating Comparator (With Analog Input from External Pin)

	bit7	bit6	bit5	bit4	bit3	bit2	bit1	bit0
CMRn	BGRPD	BGRS	OS	IF	IE	VCID	VCOE	PD
	1	0	❍	❍	0	0	0	0

❍ : Bit to be used
0 : Set to "0"
1 : Set to "1"

After the comparator is activated as shown above, it has to wait for the stabilization wait time to elapse. For details of the stabilization wait time of the comparator, refer to the device data sheet.

Note:

Before activating the comparator, set the IE bit in the CMRn register to "0" in advance in order to avoid any unexpected interrupt generated due to the comparator being unstable at its startup.

28.6.2 Setting Procedure Example

Below is an example of procedure for setting the comparator when the inverting analog input (negative input) voltage is input from an external pin:

- Initial settings

1. Disable the comparator interrupt request, and power down the comparator. (CMRn:IE = 0, CMRn:PD = 1)
2. Activate the comparator according to the settings shown in Figure 28-2..
3. Wait until the comparator stabilizes.
4. Clear the interrupt flag bit. (CMRn:IF = 0)
5. Enable the comparator interrupt request, and enable the comparator output if necessary. (CMRn:IE = 1, CMRn:VCOE = 1)

28.6.3 Software Activation of Comparator (With Analog Input from Dedicated BGR)

To activate the comparator with analog input from the dedicated BGR, do the settings shown in Figure 28-3..

Figure 28-3. Settings for Activating Comparator (With Analog Input from Dedicated BGR)

	bit7	bit6	bit5	bit4	bit3	bit2	bit1	bit0
CMRn	BGRPD	BGRS	OS	IF	IE	VCID	VCOE	PD
	0	1	❍	❍	0	0	0	0

❍ : Bit to be used
0 : Set to "0"
1 : Set to "1"

After the dedicated BGR is activated as shown above, it has to wait for the stabilization wait time to elapse. For details of the stabilization wait time of the dedicated BGR, refer to the device data sheet.

Note:

Before activating the comparator, set the IE bit in the CMRn register to "0" in advance in order to avoid any unexpected interrupt generated due to the comparator being unstable at its startup.

28.6.4 Setting Procedure Example

Below is an example of procedure for setting the comparator when the inverting analog input (negative input) voltage is input from the dedicated BGR:

- Initial settings

1. Disable the comparator interrupt request. (CMRn:IE = 0)
2. Activate the comparator and the dedicated BGR according to the settings shown in Figure 28-3..
3. Wait until the dedicated BGR stabilizes.
4. Clear the interrupt flag bit. (CMRn:IF = 0)
5. Enable the comparator interrupt request, and enable the comparator output if necessary. (CMRn:IE = 1, CMRn:VCOE = 1)

28.7 Register

This section describes the register of the comparator.

Table 28-3. List of Comparator Register

Register abbreviation	Register name	Reference
CMRn	Comparator control register ch. n	28.7.1

28.7.1 Comparator Control Register ch. n (CMRn)

The comparator control register ch. n (CMRn) has the following functions:

- To power up or power down the comparator (CMRn:PD)
- To enable or disable comparator output (CMRn:VCOE)
- To enable and disable comparator analog input (CMRn:VCID)
- To power up or power down the dedicated BGR (CMRn:BGRPD)
- To select the comparator reference voltage source (CMRn:BGRS)

Except in stop mode, watch mode or time-base timer mode, if CMRn:IE has been set to "1", upon detection of a rising edge or falling edge of comparator output, the comparator generates an interrupt request and the interrupt flag bit (CMRn:IF) is automatically set to "1" at the same time.
The output status of the comparator can be read through the OS bit in the comparator control register ch. n (CMRn).

Register Configuration

bit	7	6	5	4	3	2	1	0
Field	BGRPD	BGRS	OS	IF	IE	VCID	VCOE	PD
Attribute	R/W	R/W	R	R/W	R/W	R/W	R/W	R/W
Initial value	1	1	0	0	0	1	0	1

Register Functions

[bit7] BGRPD: Dedicated BGR power down control bit

This bit powers up or powers down the dedicated BGR.

bit7	Details
Writing "0"	Powers up the dedicated BGR.
Writing "1"	Powers down the dedicated BGR.

Note:

After the dedicated BGR is powered up, it has to wait for the stabilization time to elapse stabilize before starting to operate. For details of the stabilization time of the dedicated BGR, refer to the device data sheet.

[bit6] BGRS: Inverting analog input (negative input) voltage source select bit

This bit selects the external pin or the dedicated BGR as the inverting analog input (negative input) voltage source.

bit6	Details
Writing "0"	Selects the external pin as the inverting analog input (negative input) voltage source.
Writing "1"	Selects the dedicated BGR as the inverting analog input (negative input) voltage source.

Note:

Power down the comparator (CMRn:PD = 1) before changing the inverting analog input (negative input) voltage source.

[bit5] OS: Output status bit

This bit indicates the output status of the comparator.

bit5	Details
Reading "0"	Indicates that the comparator outputs "L".
Reading "1"	Indicates that the comparator outputs "H".

Note:

This bit is not updated in stop mode, watch mode or time-base timer mode. When the PD bit is set to "1" (to power down the comparator), the OS bit becomes "0".

[bit4] IF: Output edge detection interrupt flag bit

This bit detects the output rising edge and the output falling edge of the comparator.

With the comparator in operation, this bit is set to "1" if an output rising edge or an output falling edge occurs.

When read by the read-modify-write (RMW) type of instruction, this bit always returns "1".

bit4	Details
Reading "0"	Indicates that no output rising edge/falling edge has occurred.
Reading "1"	Indicates that an output rising edge/falling edge has occurred.
Writing "0"	Clears this bit.
Writing "1"	Has no effect on operation.

Note:

This bit is not be updated in stop mode, watch mode or time-base timer mode.

[bit3] IE: Interrupt request enable bit

This bit enables or disables the interrupt request of the comparator.

Writing "0" to this bit disables the interrupt request of the comparator.

Writing "1" to this bit enables the interrupt request of the comparator. With the interrupt request enabled, the comparator generates an interrupt request when detecting an output rising edge or an output falling edge.

bit3	Details
Writing "0"	Disables the interrupt request of the comparator.
Writing "1"	Enables the interrupt request of the comparator.

[bit2] VCID: Comparator analog input disable bit

This bit enables or disables comparator analog input.

bit2	Details
Writing "0"	Enables comparator analog input.
Writing "1"	Disables comparator analog input.

Notes:

- In the case of a pin possessing the non-inverting analog input (positive input) function, the general-purpose I/O port function of that pin is disabled when the analog input function is enabled by this bit.
- In the case of a pin possessing the inverting analog input (negative input) function, the general-purpose I/O port function of that pin is disabled when the analog input function is enabled by this bit and the external pin is selected as the inverting analog input (negative input) voltage source (CMRn:BGRS = 0).

[bit1] VCOE: Comparator output enable bit

This bit enables or disables comparator output.

bit1	Details
Writing "0"	Disables comparator output. The output pin of the comparator is used as general-purpose I/O port.
Writing "1"	Enables comparator output.

[bit0] PD: Comparator power down control bit

This bit powers up or down the comparator.

bit0	Details
Writing "0"	Powers up the comparator.
Writing "1"	Powers down the comparator.

29. System Configuration Controller

This chapter describes the functions and operations of the system configuration controller (called the "controller" in this chapter).

29.1 Overview

29.2 Register

29.1 Overview

The controller consists of the system configuration register (SYSC), which is an 8-bit register used to configure the clock and reset system, and to select the 8/10-bit A/D converter trigger input pin (ADTG) and the 16-bit PPG timer ch. 0 trigger input pin (TRG0).

29.1.1 Functions of SYSC

- Selecting the general purpose I/O port/reset function for the PF2/$\overline{\text{RST}}$ pin
- Enabling/disabling reset output for the $\overline{\text{RST}}$ pin
- Selecting the general purpose I/O port/oscillation function for the PF0/X0 pin and that for the PF1/X1 pin
- Selecting the general purpose I/O port/oscillation function for the PG1/X0A pin and that for the PG2/X1A pin
- Mapping the 8/10-bit A/D converter trigger input pin (ADTG) and the 16-bit PPG timer ch. 0 trigger input pin (TRG0) from P13 to P83

29.2 Register

This section describes the register of the controller.

Table 29-1. List of Controller Register

Register abbreviation	Register name	Reference
SYSC	System configuration register	29.2.1

29.2.1 System Configuration Register (SYSC)

This section describes the system configuration register (SYSC).

Register Configuration

bit	7	6	5	4	3	2	1	0
Field	PGSEL	PFSEL	Reserved	Reserved	Reserved	ADTGSEL	RSTOE	RSTEN
Attribute	R/W	R/W	W	W	W	R/W	R/W	R/W
Initial value	1	1	0	0	0	0	1	1

Register Functions

[bit7] PGSEL: PG1 and PG2 function select bit

This bit selects the function of the PG1 and PG2 pins.

Writing "0" to this bit makes the PG1 and PG2 pins function as subclock oscillation pins. The subclock oscillation is enabled or disabled by the subclock oscillation enable bit (SYCC2:SOSCE).

Writing "1" to this bit makes the PG1 and PG2 pins function as general-purpose I/O ports.

bit7	Details
Writing "0"	Makes the PG1 and PG2 pins function as subclock oscillation pins.
Writing "1"	Makes the PG1 and PG2 pins function as general-purpose I/O ports.

[bit6] PFSEL: PF0 and PF1 function select bit

This bit selects the function of the PF0 and PF1 pins.

Writing "0" to this bit makes the PF0 and PF1 pins function as main clock oscillation pins. The main clock oscillation is enabled or disabled by the main clock oscillation enable bit (SYCC2:MOSCE).

Writing "1" to this bit makes the PF0 and PF1 pins function as general-purpose I/O ports.

bit6	Details
Writing "0"	Makes the PF0 and PF1 pins function as main clock oscillation pins.
Writing "1"	Makes the PF0 and PF1 pins function as general-purpose I/O ports.

[bit5:3] Reserved bits

Always set these bits to "0".

[bit2] ADTGSEL: ADTG and TRG0 pin select bit

This bit selects which pin the ADTG pin (8/10-bit A/D converter trigger input pin) and the TRG0 pin (16-bit PPG timer ch. 0 trigger input pin) are mapped to.

bit2	Details
Writing "0"	Selects P13 as the pin to which the ADTG pin and the TRG0 pin are mapped.
Writing "1"	Selects P83 as the pin to which the ADTG pin and the TRG0 pin are mapped.

[bit1] RSTOE: Reset output enable/disable bit

This bit enables or disables the reset output function of the PF2/$\overline{\text{RST}}$ pin with the reset input function enabled. When the reset input function is disabled (SYSC:RSTEN = 0), the reset output function is disabled regardless of the setting of this bit.

See the PF2 function select bit (SYSC:RSTEN) for details of selecting the reset input function.

bit1	Details
Writing "0"	Disables the reset output function of the PF2/$\overline{\text{RST}}$ pin.
Writing "1"	Enables the reset output function of the PF2/$\overline{\text{RST}}$ pin.

[bit0] RSTEN: PF2 function select bit

This bit enables or disables the reset input function of the PF2/$\overline{\text{RST}}$ pin.

Writing "0" to this bit disables the reset input function of the PF2/$\overline{\text{RST}}$ pin and enables the general-purpose I/O port function.

Writing "1" to this bit enables the reset input function of the PF2/$\overline{\text{RST}}$ pin and disables the general-purpose I/O port function.

Set bit2 in the PDRF register to "1" before modifying this bit.

bit0	Details
Writing "0"	Selects the general-purpose I/O port function of the PF2/$\overline{\text{RST}}$ pin.
Writing "1"	Selects the reset output function of the PF2/$\overline{\text{RST}}$ pin.

Note:

To keep the reset input/output function after the reset, SYSC:RSTEN and SYSC:RSTOE are initialized to "1" after the power is switched on. They are not initialized by any other type of reset.

When the reset input/output functions have to be used in a system, it is strongly recommended that SYSC:RSTEN be initialized to "1" in the initialize program routine after a reset for stable operation. With the reset input/output functions having been enabled, all types of reset, including the watchdog reset, can be used.

A. Appendix

This section provides an overview of instructions.

A.1 Instruction Overview

A.2 Addressing

A.3 Special Instruction

A.4 Bit Manipulation Instructions (SETB, CLRB)

A.5 F2MC-8FX Instructions

A.6 Instruction Map

A.1 Instruction Overview

This section explains the instructions used in F^{2}MC-8FX.

A.1.1 Instruction Overview of F^{2}MC-8FX

In the F^{2}MC-8FX, there are 140 kinds of one byte instructions (256 bytes on the map), and the instruction code is composed of the instruction and the operand following it.

Figure A-1 shows the correspondence of the instruction code and the instruction map.

Figure A-1. Instruction Code and Instruction Map

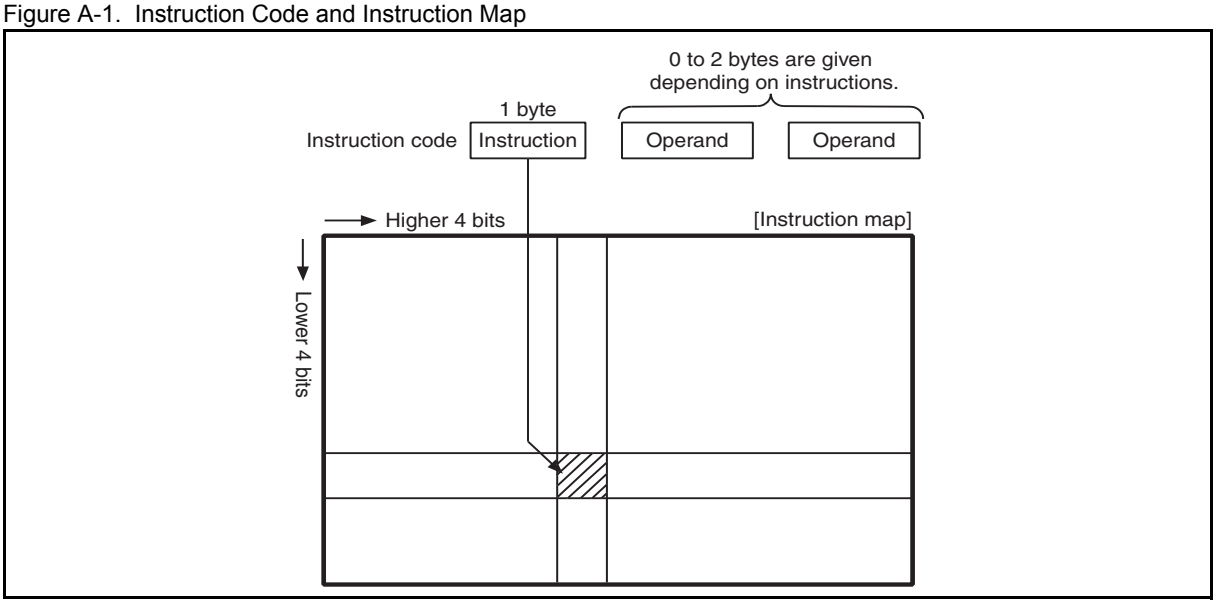

- The instruction is classified into following four types; forwarding system, operation system, branch system and others.
- There are various methods of addressing, and ten kinds of addressing can be selected by the selection and the operand specification of the instruction.

- This provides with the bit operation instruction, and can execute the read-modify-write (RMW) type of instruction.
- There is an instruction that directs special operation.

A.1.2 Meanings of Signs in Instruction Codes

Table A-1 shows the meanings of signs used in explaining instruction codes in APPENDIX A.

Table A-1. Meanings of Signs in Instruction Codes

Sign	Meanings
dir	Direct address (8-bit length)
off	Offset (8-bit length)
ext	Extended address (16-bit length)
#vct	Vector table number (3-bit length)
#d8	Immediate data (8-bit length)
#d16	Immediate data (16-bit length)
dir:b	Bit direct address (8-bit length: 3-bit length)
rel	Branch relative address (8-bit length)
@	Register indirect (Example: @A, @IX, @EP)
A	Accumulator (Whether 8- bit length or 16- bit length is decided by the instruction used.)
AH	Upper 8-bit of accumulator (8-bit length)
AL	Lower 8-bit of accumulator (8-bit length)
T	Temporary accumulator (Whether 8- bit length or 16- bit length is decided by the instruction used.)
TH	Upper 8-bit of temporary accumulator (8-bit length)
TL	Lower 8-bit of temporary accumulator (8-bit length)
IX	Index register (16-bit length)
EP	Extra pointer (16-bit length)
PC	Program counter (16-bit length)
SP	Stack pointer (16-bit length)
PS	Program status (16-bit length)
dr	Either of accumulator or index register (16-bit length)
CCR	Condition code register (8-bit length)
RP	Register bank pointer (5-bit length)
DP	Direct bank pointer (3-bit length)
Ri	General-purpose register (8-bit length, i = 0 to 7)
x	This shows that x is immediate data. (Whether 8- bit length or 16- bit length is decided by the instruction used.)
(x)	This shows that contents of x are objects of the access. (Whether 8- bit length or 16- bit length is decided by the instruction used.)
((x))	This shows that the address that contents of x show is an object of the access. (Whether 8- bit length or 16- bit length is decided by the instruction used.)

A.1.3 Meanings of Items in Instruction Table

Table A-2. Meanings of Items in Instruction Table

Item	Meaning
MNEMONIC	It shows the assembly description of the instruction.
~	It shows the number of cycles of the instruction. One instruction cycle is a machine cycle. Note: The number of cycles of the instruction can be delayed by 1 cycle by the immediately preceding instruction. Moreover, the number of cycles of the instruction might be extended in the access to the I/O area.
#	It shows the number of bytes for the instruction.
Operation	It shows the operations for the instruction.
TL, TH, AH	They show the change (auto forwarding from A to T) in the content when each TL, TH, and AH instruction is executed. The sign in the column indicates the followings respectively. -: No change dH: upper 8 bits of the data described in operation. AL and AH: the contents become those of the immediately preceding instruction's AL and AH. 00: Become 00
N, Z, V, C	They show the instruction into which the corresponding flag is changed respectively. The sign in the column shows the followings respectively. -: No change +: Change R: Become "0" S: Become "1"
OP CODE	It shows the code of the instruction. When a pertinent instruction occupies two or more codes, it follows the following description rules. [Example] 48 to 4F: This shows 48, 49....4F.

A.2 Addressing

F^{2}MC-8FX has the following ten types of addressing:

- Direct addressing
- Extended addressing
- Bit direct addressing
- Index addressing
- Pointer addressing
- General-purpose register addressing
- Immediate addressing
- Vector addressing
- Relative addressing
- Inherent addressing

A.2.1Explanation of Addressing

A.2.1.1 Direct addressing

This is used when accessing the direct area of "0x0000" to "0x047F" with addressing indicated "dir" in instruction table. In this addressing, when the operand address is "0x00" to "0x7F", it is accessed into "0x0000" to "0x007F. Moreover, when the operand address is "0x80" to "0xFF", the access can be mapped in "0x0080" to "0x047F" by setting of direct bank pointer DP. Figure A-2 shows an example.

Figure A-2. Example of Direct Addressing

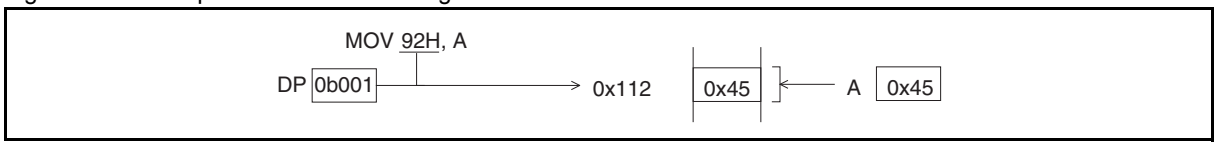

A.2.1.2 Extended addressing

This is used when the area of the entire 64 Kbyte is accessed by addressing shown "ext" in the instruction table. In this addressing, the first operand specifies one high rank byte of the address and the second operand specifies one subordinate position byte of the address.

Figure A-3 shows an example.

Figure A-3. Example of Extended Addressing

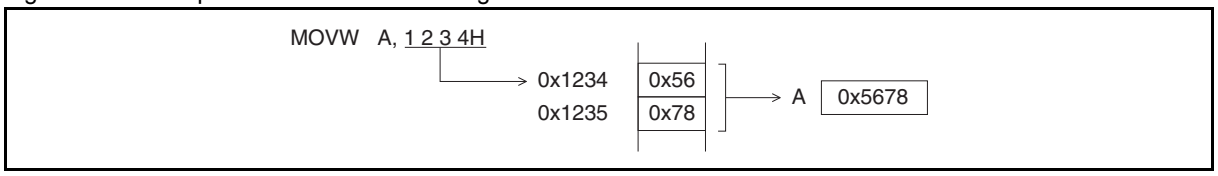

A.2.1.3 Bit direct addressing

This is used when accessing the direct area of "0x0000" to "0x047F" in bit unit with addressing indicated "dir:b" in instruction table. In this addressing, when the operand address is "0x00" to "0x7F", it is accessed into "0x0000" to "0x007F". Moreover, when the operand address is "0x80" to "0xFF", the access can be mapped in "0x0080" to "0x047F" by setting of direct bank pointer DP. The position of the bit in the specified address is specified by the values of the instruction code of three subordinate position bits.

Figure A-4 shows an example.

Figure A-4. Example of Bit Direct Addressing

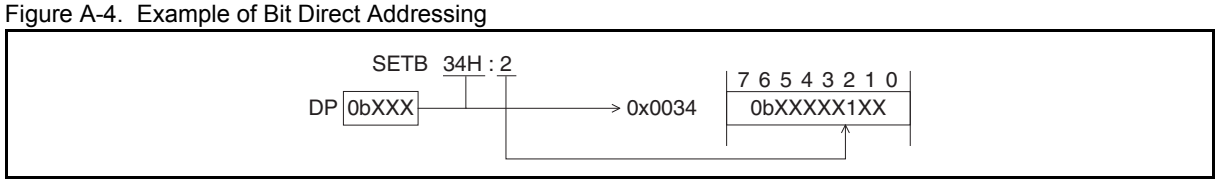

A.2.1.4 Index addressing

This is used when the area of the entire 64 Kbyte is accessed by addressing shown "@IX+off" in the instruction table. In this addressing, the content of the first operand is sign extended and added to IX (index register) to the resulting address. Figure A-5 shows an example.

Figure A-5. Example of Index Addressing

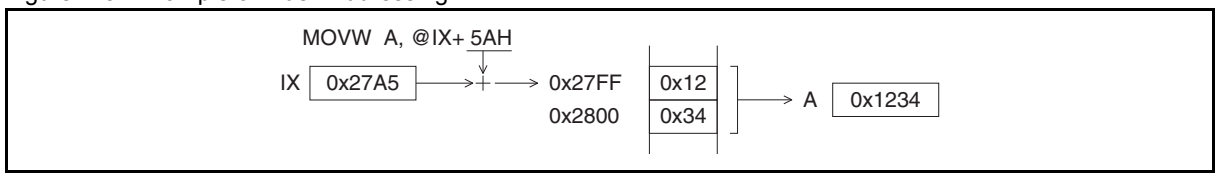

A.2.1.5 Pointer addressing

This is used when the area of the entire 64 Kbyte is accessed by addressing shown "@EP" in the instruction table. In this addressing, the content of EP (extra pointer) is assumed to be an address. Figure A-6 shows an example.

Figure A-6. Example of Pointer Addressing

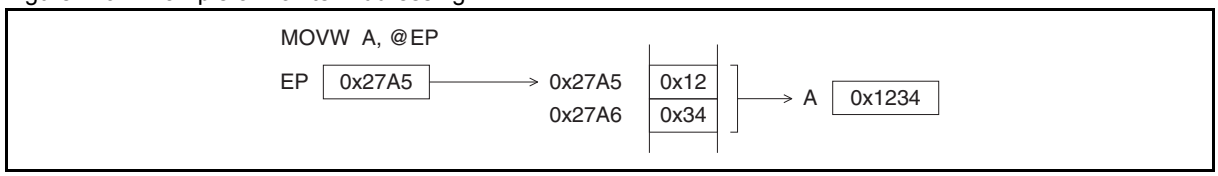

A.2.1.6 General-purpose register addressing

This is used when accessing the register bank in general-purpose register area with the addressing shown "Ri" in instruction table. In this addressing, fix one high rank byte of the address to "01" and create one subordinate position byte from the contents of RP (register bank pointer) and three subordinate bits of the operation code to access to this address. Figure A-7 shows an example.

Figure A-7. Example of General-purpose Register Addressing

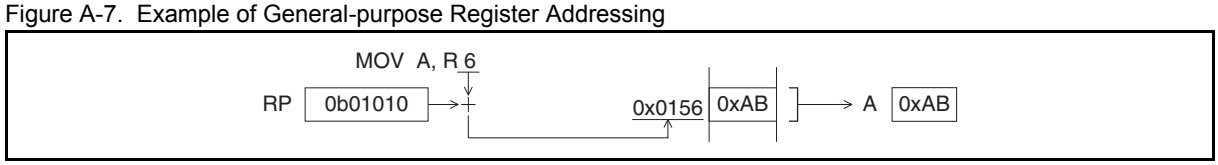

A.2.1.7 Immediate addressing

This is used when immediate data is needed in addressing shown "#d8" in the instruction table. In this addressing, the operand becomes immediate data as it is. The specification of byte/word depends on the operation code. Figure A-8 shows an example.

Figure A-8. Example of Immediate Addressing

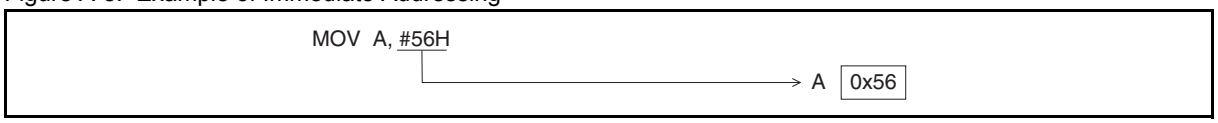

A.2.1.8 Vector addressing

This is used when branching to the subroutine address registered in the table with the addressing shown "#vct" in the instruction table. In this addressing, information on "#vct" is contained in the operation code, and the address of the table is created using the combinations shown in Table A-3.

Table A-3. Vector Table Address Corresponding to "#vct"

#vct	Vector table address (jump destination high-ranking address: subordinate address)
0	0xFFC0 : 0xFFC1
1	0xFFC2 : 0xFFC3
2	0xFFC4 : 0xFFC5
3	0xFFC6 : 0xFFC7
4	0xFFC8 : 0xFFC9
5	0xFFCA : 0xFFCB
6	0xFFCC : 0xFFCD
7	0xFFCE : 0xFFCF

Figure A-9 shows an example.

Figure A-9. Example of Vector Addressing

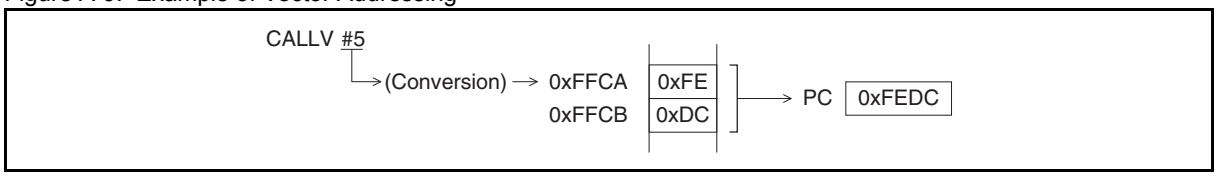

A.2.1.9 Relative addressing

This is used when branching to the area in 128 bytes before and behind PC (program counter) with the addressing shown "rel" in the instruction table. In this addressing, add the content of the operand to PC with the sign and store the result in PC. Figure A-10 shows an example.

Figure A-10. Example of Relative Addressing

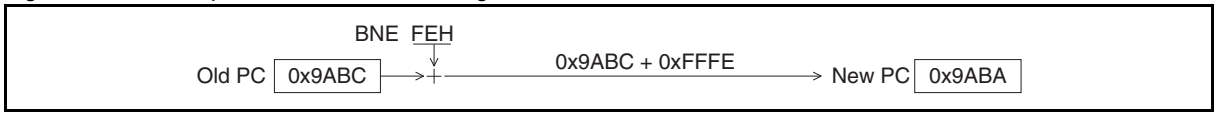

In this example, by jumping to the address where the operation code of BNE is stored, it results in an infinite loop.

A.2.1.10 Inherent addressing

This is used when doing the operation decided by the operation code with the addressing that does not have the operand in the instruction table. In this addressing, the operation depends on each instruction. Figure A-11 shows an example.

Figure A-11. Example of Inherent Addressing

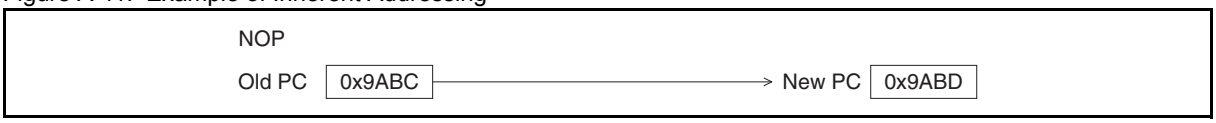

A.3 Special Instruction

This section explains special instructions other than the addressings.

A.3.1 Special Instruction

A.3.1.1 JMP @A

This instruction is to branch the content of A (accumulator) to PC (program counter) as an address. N pieces of the jump destination is arranged on the table, and one of the contents is selected and transferred to A. N branch processing can be done by executing this instruction.

Figure A-12 shows a summary of the instruction.

Figure A-12. JMP @A

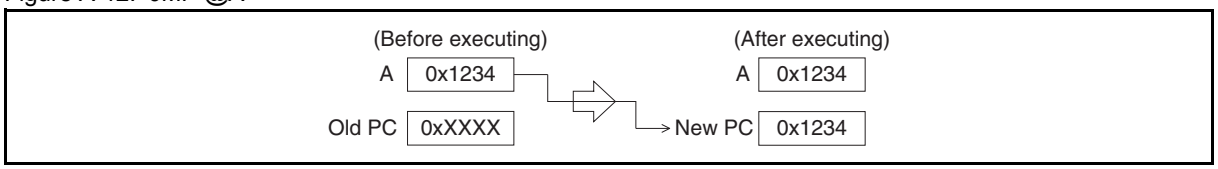

A.3.1.2 MOVW A, PC

This instruction works as the opposite of "JMP @A". That is, it stores the content of PC to A. When you have executed this instruction in the main routine and set it to call a specific subroutine, you can make sure that the content of A is the specified value in the subroutine. Also, you can identify that the branch is not from the part that cannot be expected, and use it for the reckless driving judgment.

Figure A-13 shows a summary of the instruction.

Figure A-13. MOVW A, PC

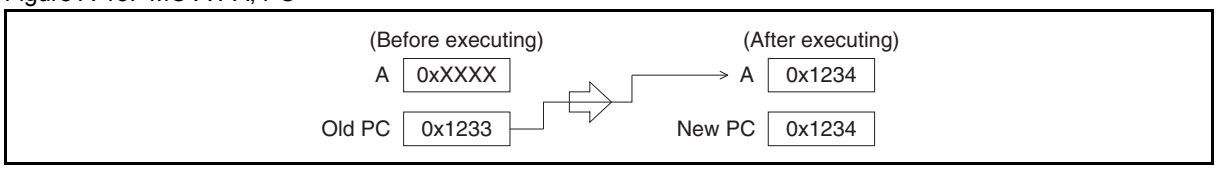

When this instruction is executed, the content of A reaches the same value as the address where the following instruction is stored, rather than the address where operation code of this instruction is stored. Therefore, in Figure A-13., the value "0x1234" stored in A corresponds to the address where the following operation code of "MOVW A, PC" is stored.

A.3.1.3 MULU A

This instruction performs an unsigned multiplication of AL (lower 8-bit of the accumulator) and TL (lower 8-bit of the temporary accumulator), and stores the 16-bit result in A. The contents of T (temporary accumulator) do not change. The contents of AH (higher 8-bit of the accumulator) and TH (higher 8-bit of the temporary accumulator) before execution of the instruction are not used for the operation. Note that since the instruction does not change the flags, a branch may occur depending on the multiplication result.

Figure A-14 shows a summary of the instruction.

Figure A-14. MULU A

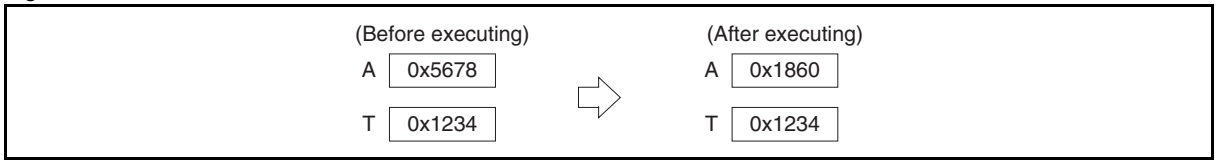

A.3.1.4 DIVU A

This instruction divides the 16-bit value in T by the unsigned 16-bit value in A, and stores the 16-bit result and the 16-bit remainder in A and T, respectively. When the value in A before execution of instruction is "0", the Z flag becomes "1" to indicate zero-division is executed. Note that since the instruction does not change other flags, a branch may occur depending on the division result.

Figure A-15 shows a summary of the instruction.

Figure A-15. DIVU A

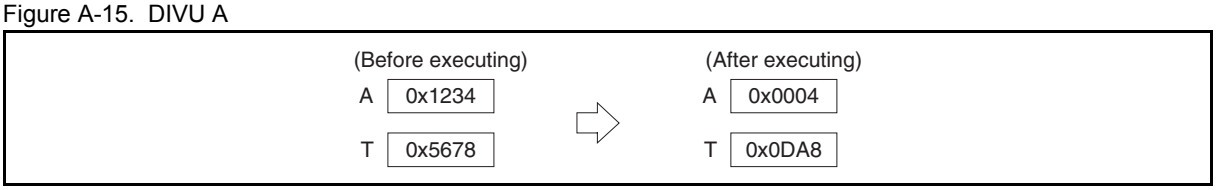

A.3.1.5 XCHW A, PC

This instruction swaps the contents of A and PC, resulting in a branch to the address contained in A before execution of the instruction. After the instruction is executed, A becomes the address that follows the address where the operation code of "XCHW A, PC" is stored. This instruction is effective especially when it is used in the main routine to specify a table for use in a subroutine.

Figure A-16 shows a summary of the instruction.

Figure A-16. XCHW A, PC

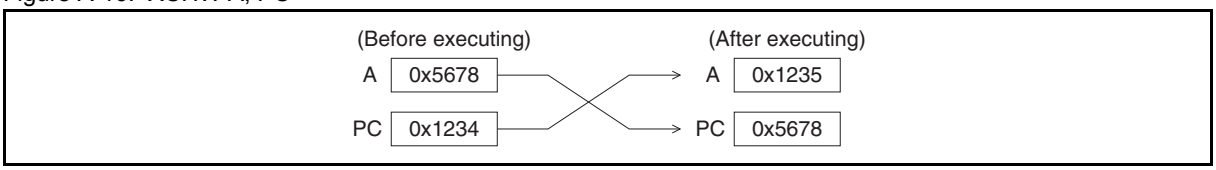

When this instruction is executed, the content of A reaches the same value as the address where the following instruction is stored, rather than the address where operation code of this instruction is stored. Therefore, in Figure A-16, the value "0x1235" stored in A corresponds to the address where the following operation code of "XCHW A, PC" is stored. This is why "0x1235" is stored instead of "0x1234".

Figure A-17 shows an assembler language example.

Figure A-17. Example of Using "XCHW A, PC"

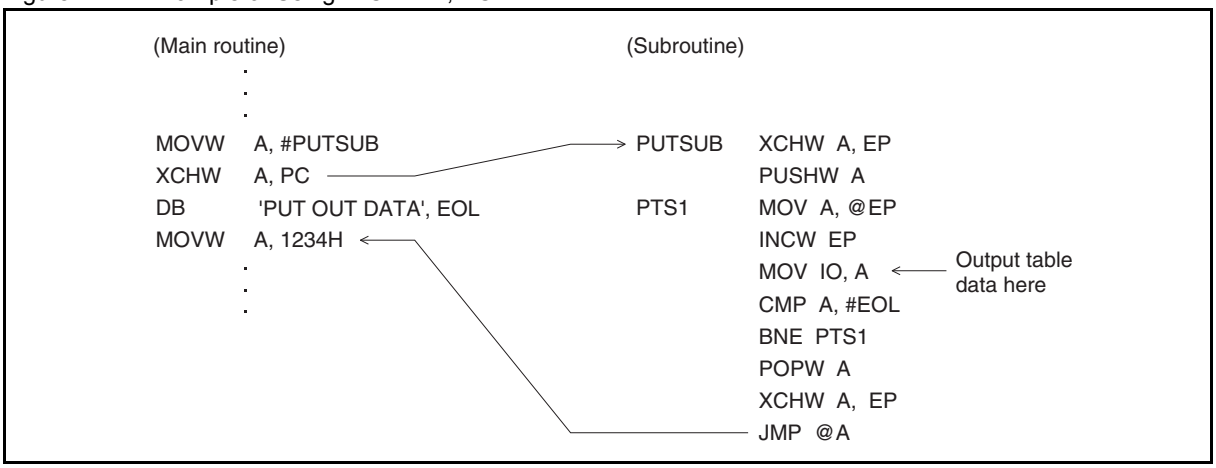

A.3.1.6 CALLV #vct

This instruction is used to branch to a subroutine address stored in the vector table. The instruction saves the return address (contents of PC) in the location at the address contained in SP (stack pointer), and uses vector addressing to cause a branch to the address stored in the vector table. Because CALLV #vct is a 1-byte instruction, the use of this instruction for frequently used subroutines can reduce the entire program size.

Figure A-18 shows a summary of the instruction.

Figure A-18. Example of Executing CALLV #3

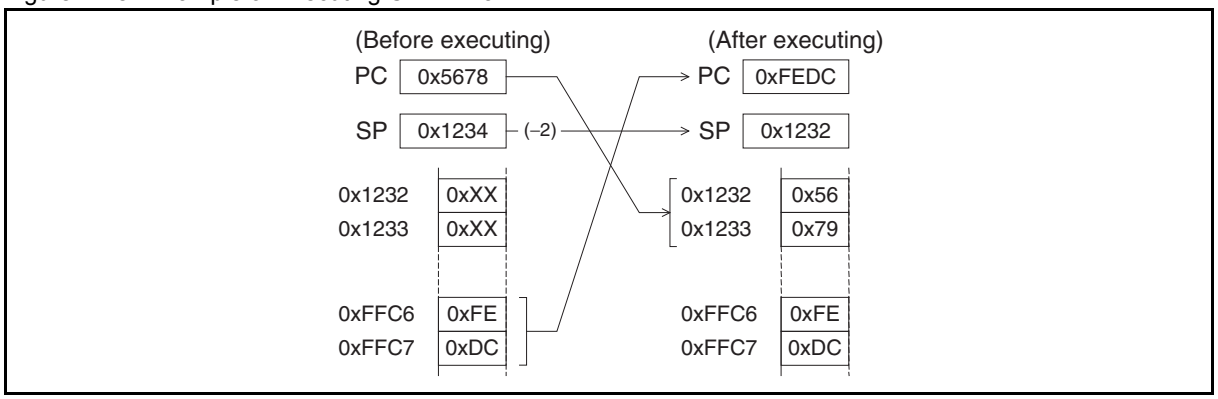

After the CALLV #vct instruction is executed, the contents of PC saved on the stack area are the address of the operation code of the next instruction, rather than the address of the operation code of CALLV #vct. Accordingly, Figure A-18. shows that the value saved in the stack (0x1232 and 0x1233) is 0x5679, which is the address of the operation code of the instruction that follows "CALLV vct" (return address).

Table A-4. Vector Table

Vector use (call instruction)	Vector table address	
	Upper	Lower
CALLV #7	0xFFCE	0xFFCF
CALLV #6	0xFFCC	0xFFCD
CALLV #5	0xFFCA	0xFFCB
CALLV #4	0xFFC8	0xFFC9
CALLV #3	0xFFC6	0xFFC7
CALLV #2	0xFFC4	0xFFC5
CALLV #1	0xFFC2	0xFFC3
CALLV #0	0xFFC0	0xFFC1

A.4 Bit Manipulation Instructions (SETB, CLRB)

Some peripheral function registers include bits that are read differently than usual by a bit manipulation instruction.

A.4.1 Read-modify-write Operation

By using these bit manipulation instructions, you can set only the specified bit in a register or RAM location to "1" (SETB) or clear to "0" (CLRB). However, as the CPU operates data in 8-bit units, the actual operation (read-modify-write operation) involves a sequence of steps: 8-bit data is read, the specified bit is changed, and the data is written back to the location at the original address.

Table A-5 shows bus operation for bit manipulation instructions.

Table A-5. Bus Operation for Bit Manipulation Instructions

CODE	MNEMONIC	~	Cycle	Address bus	Data bus	RD	WR	RMW
A0 to A7 A8 to AF	CLRB dir:b SETB dir:b	4	1 2 3 4	N+2 dir address dir address N+3	Next instruction Data Data Instruction after next	1 1 0 1	0 0 1 0	1 1 0 0

A.4.2 Read Destination on the Execution of Bit Manipulation Instructions

For some I/O ports and the interrupt request flag bits, the read destination differs between a normal read operation and a read-modify-write operation.

A.4.2.1 I/O ports (during a bit manipulation)

From some I/O ports, an I/O pin value is read during a normal read operation, while a port data register value is read during a bit manipulation. This prevents the other port data register bits from being changed accidentally, regardless of the I/O directions and states of the pins.

A.4.2.2 Interrupt request flag bits (during a bit manipulation)

An interrupt request flag bit functions as a flag bit indicating whether an interrupt request exists during a normal read operation, however, "1" is always read from this bit during a bit manipulation. This prevents the flag from being cleared accidentally by writing the value "0" to the interrupt request flag bit when manipulating another bit.

A.5 F²MC-8FX Instructions

Table A-6. to Table A-9. show the instructions used by F²MC-8FX.

A.5.1 Transfer Instructions

Table A-6. Transfer Instructions (Sheet 1 of 2)

No.	MNEMONIC		~	#	Operation	TL	TH	AH	N	Z	V	C	OPCODE
1	MOV	dir, A	3	2	(dir) ← (A)	-	-	-	-	-	-	-	45
2	MOV	@IX + off, A	3	2	((IX) + off) ← (A)	-	-	-	-	-	-	-	46
3	MOV	ext, A	4	3	(ext) ← (A)	-	-	-	-	-	-	-	61
4	MOV	@EP, A	2	1	((EP)) ← (A)	-	-	-	-	-	-	-	47
5	MOV	Ri, A	2	1	(Ri) ← (A)	-	-	-	-	-	-	-	48 to 4F
6	MOV	A, #d8	2	2	(A) ← d8	AL	-	-	+	+	-	-	04
7	MOV	A, dir	3	2	(A) ← (dir)	AL	-	-	+	+	-	-	05
8	MOV	A, @IX + off	3	2	(A) ← ((IX) + off)	AL	-	-	+	+	-	-	06
9	MOV	A, ext	4	3	(A) ← (ext)	AL	-	-	+	+	-	-	60
10	MOV	A, @A	2	1	(A) ← ((A))	AL	-	-	+	+	-	-	92
11	MOV	A, @EP	2	1	(A) ← ((EP))	AL	-	-	+	+	-	-	07
12	MOV	A, Ri	2	1	(A) ← (Ri)	AL	-	-	+	+	-	-	08 to 0F
13	MOV	dir, #d8	4	3	(dir) ← d8	-	-	-	-	-	-	-	85
14	MOV	@IX + off, #d8	4	3	((IX) + off) ← d8	-	-	-	-	-	-	-	86
15	MOV	@EP, #d8	3	2	((EP)) ← d8	-	-	-	-	-	-	-	87
16	MOV	Ri, #d8	3	2	(Ri) ← d8	-	-	-	-	-	-	-	88 to 8F
17	MOVW	dir, A	4	2	(dir) ← (AH) , (dir + 1) ← (AL)	-	-	-	-	-	-	-	D5
18	MOVW	@IX + off, A	4	2	((IX) + off) ← (AH) , ((IX) + off + 1) ← (AL)	-	-	-	-	-	-	-	D6
19	MOVW	ext, A	5	3	(ext) ← (AH) , (ext + 1) ← (AL)	-	-	-	-	-	-	-	D4
20	MOVW	@EP, A	3	1	((EP)) ← (AH) , ((EP) + 1) ← (AL)	-	-	-	-	-	-	-	D7
21	MOVW	EP, A	1	1	(EP) ← (A)	-	-	-	-	-	-	-	E3
22	MOVW	A, #d16	3	3	(A) ← d16	AL	AH	dH	+	+	-	-	E4
23	MOVW	A, dir	4	2	(AH) ← (dir) , (AL) ← (dir + 1)	AL	AH	dH	+	+	-	-	C5
24	MOVW	A, @IX + off	4	2	(AH) ← ((IX) + off) , (AL) ← ((IX) + off + 1)	AL	AH	dH	+	+	-	-	C6
25	MOVW	A, ext	5	3	(AH) ← (ext) , (AL) ← (ext + 1)	AL	AH	dH	+	+	-	-	C4
26	MOVW	A, @A	3	1	(AH) ← ((A)) , (AL) ← ((A) + 1)	AL	AH	dH	+	+	-	-	93
27	MOVW	A, @EP	3	1	(AH) ← ((EP)) , (AL) ← ((EP) + 1)	AL	AH	dH	+	+	-	-	C7
28	MOVW	A, EP	1	1	(A) ← (EP)	-	-	dH	-	-	-	-	F3
29	MOVW	EP, #d16	3	3	(EP) ← d16	-	-	-	-	-	-	-	E7
30	MOVW	IX, A	1	1	(IX) ← (A)	-	-	-	-	-	-	-	E2
31	MOVW	A, IX	1	1	(A) ← (IX)	-	-	dH	-	-	-	-	F2
32	MOVW	SP, A	1	1	(SP) ← (A)	-	-	-	-	-	-	-	E1

Table A-6. Transfer Instructions (Sheet 2 of 2)

No.	MNEMONIC		~	#	Operation	TL	TH	AH	N	Z	V	C	OPCODE
33	MOVW	A, SP	1	1	(A) ← (SP)	-	-	dH	-	-	-	-	F1
34	MOV	@A, T	2	1	((A)) ← (T)	-	-	-	-	-	-	-	82
35	MOVW	@A, T	3	1	((A)) ← (TH) , ((A) + 1) ← (TL)	-	-	-	-	-	-	-	83
36	MOVW	IX, #d16	3	3	(IX) ← d16	-	-	-	-	-	-	-	E6
37	MOVW	A, PS	1	1	(A) ← (PS)	-	-	dH	-	-	-	-	70
38	MOVW	PS, A	1	1	(PS) ← (A)	-	-	-	+	+	+	+	71
39	MOVW	SP, #d16	3	3	(SP) ← d16	-	-	-	-	-	-	-	E5
40	SWAP		1	1	(AH) ←→ (AL)	-	-	AL	-	-	-	-	10
41	SETB	dir:b	4	2	(dir) : b← 1	-	-	-	-	-	-	-	A8 to AF
42	CLRB	dir:b	4	2	(dir) : b← 0	-	-	-	-	-	-	-	A0 to A7
43	XCH	A, T	1	1	(AL) ←→ (TL)	AL	-	-	-	-	-	-	42
44	XCHW	A, T	1	1	(A) ←→ (T)	AL	AH	dH	-	-	-	-	43
45	XCHW	A, EP	1	1	(A) ←→ (EP)	-	-	dH	-	-	-	-	F7
46	XCHW	A, IX	1	1	(A) ←→ (IX)	-	-	dH	-	-	-	-	F6
47	XCHW	A, SP	1	1	(A) ←→ (SP)	-	-	dH	-	-	-	-	F5
48	MOVW	A, PC	2	1	(A) ← (PC)	-	-	dH	-	-	-	-	F0

Note:

In automatic transfer to T during byte transfer to A, AL is transferred to TL. If an instruction has plural operands, they are saved in the order indicated by MNEMONIC.

A.5.2 Arithmetic Operation Instructions

Table A-7. Arithmetic Operation Instruction (Sheet 1 of 2)

No.	MNEMONIC		~	#	Operation	TL	TH	AH	N	Z	V	C	OPCODE
1	ADDC	A, Ri	2	1	(A) ← (A) + (Ri) + C	-	-	-	+	+	+	+	28 to 2F
2	ADDC	A, #d8	2	2	(A) ← (A) + d8 + C	-	-	-	+	+	+	+	24
3	ADDC	A, dir	3	2	(A) ← (A) + (dir) + C	-	-	-	+	+	+	+	25
4	ADDC	A, @IX + off	3	2	(A) ← (A) + ((IX) + off) + C	-	-	-	+	+	+	+	26
5	ADDC	A, @EP	2	1	(A) ← (A) + ((EP)) + C	-	-	-	+	+	+	+	27
6	ADDCW	A	1	1	(A) ← (A) + (T) + C	-	-	dH	+	+	+	+	23
7	ADDC	A	1	1	(AL) ← (AL) + (TL) + C	-	-	-	+	+	+	+	22
8	SUBC	A, Ri	2	1	(A) ← (A) - (Ri) - C	-	-	-	+	+	+	+	38 to 3F
9	SUBC	A, #d8	2	2	(A) ← (A) - d8 - C	-	-	-	+	+	+	+	34
10	SUBC	A, dir	3	2	(A) ← (A) - (dir) - C	-	-	-	+	+	+	+	35
11	SUBC	A, @IX + off	3	2	(A) ← (A) - ((IX) + off) - C	-	-	-	+	+	+	+	36
12	SUBC	A, @EP	2	1	(A) ← (A) - ((EP)) - C	-	-	-	+	+	+	+	37
13	SUBCW	A	1	1	(A) ← (T) - (A) - C	-	-	dH	+	+	+	+	33
14	SUBC	A	1	1	(AL) ← (TL) - (AL) - C	-	-	-	+	+	+	+	32
15	INC	Ri	3	1	(Ri) ← (Ri) + 1	-	-	-	+	+	+	-	C8 to CF
16	INCW	EP	1	1	(EP) ← (EP) + 1	-	-	-	-	-	-	-	C3
17	INCW	IX	1	1	(IX) ← (IX) + 1	-	-	-	-	-	-	-	C2
18	INCW	A	1	1	(A) ← (A) + 1	-	-	dH	+	+	-	-	C0
19	DEC	Ri	3	1	(Ri) ← (Ri) - 1	-	-	-	+	+	+	-	D8 to DF
20	DECW	EP	1	1	(EP) ← (EP) - 1	-	-	-	-	-	-	-	D3
21	DECW	IX	1	1	(IX) ← (IX) - 1	-	-	-	-	-	-	-	D2
22	DECW	A	1	1	(A) ← (A) - 1	-	-	dH	+	+	-	-	D0
23	MULU	A	8	1	(A) ← (AL) × (TL)	-	-	dH	-	-	-	-	01
24	DIVU	A	17	1	(A) ← (T) / (A) , MOD→ (T)	dL	dH	dH	-	+	-	-	11
25	ANDW	A	1	1	(A) ← (A) ∧ (T)	-	-	dH	+	+	R	-	63
26	ORW	A	1	1	(A) ← (A) ∨ (T)	-	-	dH	+	+	R	-	73
27	XORW	A	1	1	(A) ← (A) ∀ (T)	-	-	dH	+	+	R	-	53
28	CMP	A	1	1	(TL) - (AL)	-	-	-	+	+	+	+	12
29	CMPW	A	1	1	(T) - (A)	-	-	-	+	+	+	+	13
30	RORC	A	1	1	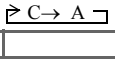	-	-	-	+	+	-	+	03
31	ROLC	A	1	1	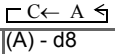	-	-	-	+	+	-	+	02
32	CMP	A, #d8	2	2	(A) - d8	-	-	-	+	+	+	+	14
33	CMP	A, dir	3	2	(A) - (dir)	-	-	-	+	+	+	+	15
34	CMP	A, @EP	2	1	(A) - ((EP))	-	-	-	+	+	+	+	17
35	CMP	A, @IX + off	3	2	(A) - ((IX) + off)	-	-	-	+	+	+	+	16
36	CMP	A, Ri	2	1	(A) - (Ri)	-	-	-	+	+	+	+	18 to 1F
37	DAA		1	1	decimal adjust for addition	-	-	-	+	+	+	+	84
38	DAS		1	1	decimal adjust for subtraction	-	-	-	+	+	+	+	94
39	XOR	A	1	1	(A) ← (AL) ∀ (TL)	-	-	-	+	+	R	-	52
40	XOR	A, #d8	2	2	(A) ← (AL) ∀ d8	-	-	-	+	+	R	-	54
41	XOR	A, dir	3	2	(A) ← (AL) ∀ (dir)	-	-	-	+	+	R	-	55
42	XOR	A, @EP	2	1	(A) ← (AL) ∀ ((EP))	-	-	-	+	+	R	-	57
43	XOR	A, @IX + off	3	2	(A) ← (AL) ∀ ((IX) + off)	-	-	-	+	+	R	-	56
44	XOR	A, Ri	2	1	(A) ← (AL) ∀ (Ri)	-	-	-	+	+	R	-	58 to 5F
45	AND	A	1	1	(A) ← (AL) ∧ (TL)	-	-	-	+	+	R	-	62

Table A-7. Arithmetic Operation Instruction (Sheet 2 of 2)

No.	MNEMONIC		~	#	Operation	TL	TH	AH	N	Z	V	C	OPCODE
46	AND	A, #d8	2	2	(A) ← (AL) ∧ d8	-	-	-	+	+	R	-	64
47	AND	A, dir	3	2	(A) ← (AL) ∧ (dir)	-	-	-	+	+	R	-	65
48	AND	A, @EP	2	1	(A) ← (AL) ∧ ((EP))	-	-	-	+	+	R	-	67
49	AND	A, @IX + off	3	2	(A) ← (AL) ∧ ((IX) + off)	-	-	-	+	+	R	-	66
50	AND	A, Ri	2	1	(A) ← (AL) ∧ (Ri)	-	-	-	+	+	R	-	68 to 6F
51	OR	A	1	1	(A) ← (AL) ∨ (TL)	-	-	-	+	+	R	-	72
52	OR	A, #d8	2	2	(A) ← (AL) ∨ d8	-	-	-	+	+	R	-	74
53	OR	A, dir	3	2	(A) ← (AL) ∨ (dir)	-	-	-	+	+	R	-	75
54	OR	A, @EP	2	1	(A) ← (AL) ∨ ((EP))	-	-	-	+	+	R	-	77
55	OR	A, @IX + off	3	2	(A) ← (AL) ∨ ((IX) + off)	-	-	-	+	+	R	-	76
56	OR	A, Ri	2	1	(A) ← (AL) ∨ (Ri)	-	-	-	+	+	R	-	78 to 7F
57	CMP	dir, #d8	4	3	(dir) - d8	-	-	-	+	+	+	+	95
58	CMP	@EP, #d8	3	2	((EP)) - d8	-	-	-	+	+	+	+	97
59	CMP	@IX + off, #d8	4	3	((IX) + off) - d8	-	-	-	+	+	+	+	96
60	CMP	Ri, #d8	3	2	(Ri) - d8	-	-	-	+	+	+	+	98 to 9F
61	INCW	SP	1	1	(SP) ← (SP) + 1	-	-	-	-	-	-	-	C1
62	DECW	SP	1	1	(SP) ← (SP) - 1	-	-	-	-	-	-	-	D1

A.5.2.1 Branch Instructions

Table A-8. Branch Instructions

No.	MNEMONIC		~	#	Operation	TL	TH	AH	N	Z	V	C	OPCODE
1	BZ/BEQ	rel(at branch)	4	2	if Z = 1 then PC← PC + rel	-	-	-	-	-	-	-	FD
	BZ/BEQ	rel(at no branch)	2										
2	BNZ/BNE	rel(at branch)	4	2	if Z = 0 then PC← PC + rel	-	-	-	-	-	-	-	FC
	BNZ/BNE	rel(at no branch)	2										
3	BC/BLO	rel(at branch)	4	2	if C = 1 then PC← PC + rel	-	-	-	-	-	-	-	F9
	BC/BLO	rel(at no branch)	2										
4	BNC/BHS	rel(at branch)	4	2	if C = 0 then PC← PC + rel	-	-	-	-	-	-	-	F8
	BNC/BHS	rel(at no branch)	2										
5	BN	rel(at branch)	4	2	if N = 1 then PC← PC + rel	-	-	-	-	-	-	-	FB
	BN	rel(at no branch)	2										
6	BP	rel(at branch)	4	2	if N = 0 then PC← PC + rel	-	-	-	-	-	-	-	FA
	BP	rel(at no branch)	2										
7	BLT	rel(at branch)	4	2	if V ⊻ N = 1 then PC← PC + rel	-	-	-	-	-	-	-	FF
	BLT	rel(at no branch)	2										
8	BGE	rel(at branch)	4	2	if V ⊻ N = 0 then PC← PC + rel	-	-	-	-	-	-	-	FE
	BGE	rel(at no branch)	2										
9	BBC	dir : b, rel	5	3	if (dir : b) = 0 then PC← PC + rel	-	-	-	-	+	-	-	B0 to B7
10	BBS	dir : b, rel	5	3	if (dir : b) = 1 then PC← PC + rel	-	-	-	-	+	-	-	B8 to BF
11	JMP	@A	3	1	(PC) ← (A)	-	-	-	-	-	-	-	E0
12	JMP	ext	4	3	(PC) ← ext	-	-	-	-	-	-	-	21
13	CALLV	#vct	7	1	vector call	-	-	-	-	-	-	-	E8 to EF
14	CALL	ext	6	3	subroutine call	-	-	-	-	-	-	-	31
15	XCHW	A, PC	3	1	(PC) ← (A) , (A) ← (PC) + 1	-	-	dH	-	-	-	-	F4
16	RET		6	1	return from subroutine	-	-	-	-	-	-	-	20
17	RETI		8	1	return from interrupt	-	-	-		restore			30

A.5.3 Other Instructions

Table A-9. Other Instructions

No.	MNEMONIC		~	#	Operation	TL	TH	AH	N	Z	V	C	OPCODE
1	PUSHW	A	4	1	((SP))← (A), (SP)← (SP) - 2	-	-	-	-	-	-	-	40
2	POPW	A	3	1	(A)← ((SP)), (SP)← (SP) + 2	-	-	dH	-	-	-	-	50
3	PUSHW	IX	4	1	((SP))← (IX), (SP)← (SP) - 2	-	-	-	-	-	-	-	41
4	POPW	IX	3	1	(IX)← ((SP)), (SP)← (SP) + 2	-	-	-	-	-	-	-	51
5	NOP		1	1	No operation	-	-	-	-	-	-	-	00
6	CLRC		1	1	(C)← 0	-	-	-	-	-	-	R	81
7	SETC		1	1	(C)← 1	-	-	-	-	-	-	S	91
8	CLRI		1	1	(I)← 0	-	-	-	-	-	-	-	80
9	SETI		1	1	(I)← 1	-	-	-	-	-	-	-	90

A.6 Instruction Map

Table A-10 shows the instruction map of F^{2}MC-8FX.

A.6.1 Instruction Map

Table A-10. Instruction Map of F^{2}MC-8FX

H / L	0	1	2	3	4	5	6	7	8	9	A	B	C	D	E	F
0	NOP	SWAP	RET	RETI	PUSHW A	POPW A	MOV A, ext	MOVW A, PS	CLRI	SETI	CLRB dir : 0	BBC dir : 0, rel	INCW A	DECW A	JMP @A	MOVW A, PC
1	MULU A	DIVU A	JMP addr16	CALL addr16	PUSHW IX	POPW IX	MOV ext, A	MOVW PS, A	CLRC	SETC	CLRB dir : 1	BBC dir : 1, rel	INCW SP	DECW SP	MOVW SP, A	MOVW A, SP
2	ROLC A	CMP A	ADDC A	SUBC A	XCH A, T	XOR A	AND A	OR A	MOV @A, T	MOV A, @A	CLRB dir : 2	BBC dir : 2, rel	INCW IX	DECW IX	MOVW IX, A	MOVW A, IX
3	RORC A	CMPW A	ADDCW A	SUBCW A	XCHW A, T	XORW A	ANDW A	ORW A	MOVW @A, T	MOVW A, @A	CLRB dir : 3	BBC dir : 3, rel	INCW EP	DECW EP	MOVW EP, A	MOVW A, EP
4	MOV A, #d8	CMP A, #d8	ADDC A, #d8	SUBC A, #d8		XOR A, #d8	AND A, #d8	OR A, #d8	DAA	DAS	CLRB dir : 4	BBC dir : 4, rel	MOVW A, ext	MOVW ext, A	MOVW A, #d16	XCHW A, PC
5	MOV A, dir	CMP A, dir	ADDC A, dir	SUBC A, dir	MOV dir, A	XOR A, dir	AND A, dir	OR A, dir	MOV dir, #d8	CMP dir, #d8	CLRB dir : 5	BBC dir : 5, rel	MOVW A, dir	MOVW dir, A	MOVW SP, #d16	XCHW A, SP
6	MOV A, @IX+d	CMP A, @IX+d	ADDC A, @IX+d	SUBC A, @IX+d	MOV @IX+d, A	XOR A, @IX+d	AND A, @IX+d	OR A, @IX+d	MOV @IX+d, #d8	CMP @IX+d, #d8	CLRB dir : 6	BBC dir : 6, rel	MOVW A, @IX+d	MOVW @IX+d, A	MOVW IX, #d16	XCHW A, IX
7	MOV A, @EP	CMP A, @EP	ADDC A, @EP	SUBC A, @EP	MOV @EP, A	XOR A, @EP	AND A, @EP	OR A, @EP	MOV @EP, #d8	CMP @EP, #d8	CLRB dir : 7	BBC dir : 7, rel	MOVW A, @EP	MOVW @EP, A	MOVW EP, #d16	XCHW A, EP
8	MOV A, R0	CMP A, R0	ADDC A, R0	SUBC A, R0	MOV R0, A	XOR A, R0	AND A, R0	OR A, R0	MOV R0, #d8	CMP R0, #d8	SETB dir : 0	BBS dir : 0, rel	INC R0	DEC R0	CALLV #0	BNC rel
9	MOV A, R1	CMP A, R1	ADDC A, R1	SUBC A, R1	MOV R1, A	XOR A, R1	AND A, R1	OR A, R1	MOV R1, #d8	CMP R1, #d8	SETB dir : 1	BBS dir : 1, rel	INC R1	DEC R1	CALLV #1	BC rel
A	MOV A, R2	CMP A, R2	ADDC A, R2	SUBC A, R2	MOV R2, A	XOR A, R2	AND A, R2	OR A, R2	MOV R2, #d8	CMP R2, #d8	SETB dir : 2	BBS dir : 2, rel	INC R2	DEC R2	CALLV #2	BP rel
B	MOV A, R3	CMP A, R3	ADDC A, R3	SUBC A, R3	MOV R3, A	XOR A, R3	AND A, R3	OR A, R3	MOV R3, #d8	CMP R3, #d8	SETB dir : 3	BBS dir : 3, rel	INC R3	DEC R3	CALLV #3	BN rel
C	MOV A, R4	CMP A, R4	ADDC A, R4	SUBC A, R4	MOV R4, A	XOR A, R4	AND A, R4	OR A, R4	MOV R4, #d8	CMP R4, #d8	SETB dir : 4	BBS dir : 4, rel	INC R4	DEC R4	CALLV #4	BNZ rel
D	MOV A, R5	CMP A, R5	ADDC A, R5	SUBC A, R5	MOV R5, A	XOR A, R5	AND A, R5	OR A, R5	MOV R5, #d8	CMP R5, #d8	SETB dir : 5	BBS dir : 5, rel	INC R5	DEC R5	CALLV #5	BZ rel
E	MOV A, R6	CMP A, R6	ADDC A, R6	SUBC A, R6	MOV R6, A	XOR A, R6	AND A, R6	OR A, R6	MOV R6, #d8	CMP R6, #d8	SETB dir : 6	BBS dir : 6, rel	INC R6	DEC R6	CALLV #6	BGE rel
F	MOV A, R7	CMP A, R7	ADDC A, R7	SUBC A, R7	MOV R7, A	XOR A, R7	AND A, R7	OR A, R7	MOV R7, #d8	CMP R7, #d8	SETB dir : 7	BBS dir : 7, rel	INC R7	DEC R7	CALLV #7	BLT rel

31. Major Changes

Major revisions in this edition

Spansion Publication Number: MN702-00012-2v0-E

Page	Revisions (For details, see their respective pages.)	
72	CHAPTER 4 RESET 4.1)Reset Operation 4.1.1)Reset Sources 4.1.1.1)Low-voltage detection reset	Added the following statement. However, the LVD reset voltage selection ID register (LVDR), LVD reset circuit password register (LVDPW) and LVD reset circuit control register (LVDCC) of the low-voltage detection reset circuit are not reset by the low-voltage detection reset.
75	4.2.1 Reset Source Register (RSRR) Register Functions	Revised the following statement in details of the EXTS bit. This bit reads "0" when read by a read access. A write access (writing "0" or "1") to this bit sets it to "0". → A read access or a write access (writing "0" or "1") to this bit sets it to "0".
		Revised the following statement in details of the WDTR bit. This bit reads "0" when read by a read access. A write access (writing "0" or "1") to this bit sets it to "0". →A read access or a write access (writing "0" or "1") to this bit sets it to "0".
		Revised the following statement in details of the PONR bit. This bit reads "0" when read by a read access. A write access (writing "0" or "1") to this bit sets it to "0". →A read access or a write access (writing "0" or "1") to this bit sets it to "0".
75		Revised the following statement in details of the HWR bit. This bit reads "0" when read by a read access. A write access (writing "0" or "1") to this bit sets it to "0". →A read access or a write access (writing "0" or "1") to this bit sets it to "0".
		Revised the following statement in details of the SWR bit. This bit reads "0" when read by a read access. A write access (writing "0" or "1") to this bit or a power-on reset sets it to "0". → A read access or a write access (writing "0" or "1") to this bit or a power-on reset sets it to "0".
241	CHAPTER 16 8/10-BIT A/D CONVERTER 16.2 Configuration	Added statements on analog input pins and analog channels.
242	16.3 Pins 16.3.1 Pins of 8/10-bit A/D Converter	Renamed the section "AN pin" to "ANn pin".
	16.3 Pins 16.3.1 Pins of 8/10-bit A/D Converter ■ ANn pin	Corrected the name of the analog input pin. AN → ANn

Page	Revisions (For details, see their respective pages.)	
250	16.7 Notes on Using 8/10-bit A/D Converter 16.7.1 Notes on Using 8/10-bit A/D Converter 8/10-bit A/D converter analog input sequences	Corrected the name of the analog input pin. AN → ANn
371	CHAPTER 24 I²C BUS INTERFACE 24.3 Channel 24.3.1 Channel of I²C Bus Interface Table 24-2	Corrected the register name of the IBCR0n register. I²C bus control register 0 → I²C bus control register 0 ch. n
		Corrected the register name of the IBCR1n register. I²C bus control register 1 → I²C bus control register 1 ch. n
		Corrected the register name of the IBSRn register. I²C bus status register → I²C bus status register ch. n
		Corrected the register name of the IDDRn register. I²C data register → I²C data register ch. n
		Corrected the register name of the IAARn register. I²C address register → I²C address register ch. n
		Corrected the register name of the ICCRn register. I²C clock control register → I²C clock control register ch. n
402	CHAPTER 25 EXAMPLE OF SERIAL PROGRAMMING CONNECTION 25.2. Example of Serial Programming Connection 25.2.2 Example of Serial Programming Connection	Added statements related to the use of the pull-up register.

NOTE: Please see "Revision History" for later revised information.

Revision History

Document Revision History

Document Title: New 8FX, MB95810K Series 8-bit Microcontroller Hardware Manual Document Number: 002-05469				
Revision	**ECN#**	**Issue Date**	**Origin of Change**	**Description of Change**
**	-	06/03/2013	AKIH	Initial Release
*A	5390670	09/21/2016	AKIH	Updated to Cypress Template.