Please note that Cypress is an Infineon Technologies Company.
The document following this cover page is marked as “Cypress” document as this is the company that originally developed the product. Please note that Infineon will continue to offer the product to new and existing customers as part of the Infineon product portfolio.

Continuity of document content
The fact that Infineon offers the following product as part of the Infineon product portfolio does not lead to any changes to this document. Future revisions will occur when appropriate, and any changes will be set out on the document history page.

Continuity of ordering part numbers
Infineon continues to support existing part numbers. Please continue to use the ordering part numbers listed in the datasheet for ordering.

CY9A130N Series

32-bit ARM® Cortex®-M3 based FM3 Microcontroller

The CY9A130N Series are highly integrated 32-bit microcontrollers that dedicated for embedded controllers with low-power consumption mode and competitive cost.

The CY9A130N Series are based on the ARM Cortex-M3 Processor with on-chip Flash memory and SRAM, and have peripheral functions such as Motor Control Timers, ADCs, DACs and Communication Interfaces (UART, CSIO, I²C).

The products which are described in this data sheet are placed into TYPE7 product categories in FM3 Family Peripheral Manual .

Features

32-bit ARM Cortex-M3 Core

- Processor version: r2p1
- Up to 20 MHz frequency operation
- Integrated Nested Vectored Interrupt Controller (NVIC): 1 channel NMI (non-maskable interrupt) and 32 channels' peripheral interrupts and 8 priority levels
- 24-bit System timer (Sys Tick): System timer for OS task management

On-chip Memories

[Flash memory]

- Up to 128 Kbytes
- Read cycle: 0 wait-cycle
- Security function for code protection

[SRAM]

This series contains a total of up to 16 Kbyte on-chip SRAM that is connected to System bus of Cortex-M3 core.

- SRAM1: Up to 16 Kbytes

Multi-function Serial Interface (Max 8 channels)

Operation mode is selectable from the followings for each channel.

- UART
- CSIO
- I²C

[UART]

- Full duplex double buffer
- Selection with or without parity supported
- Built-in dedicated baud rate generator
- External clock available as a serial clock
- Various error detection functions available (parity errors, framing errors, and overrun errors)

[CSIO]

- Full duplex double buffer
- Built-in dedicated baud rate generator
- Overrun error detection function available

[I²C]

Standard-mode (Max 100 kbps) / Fast-mode (Max 400 kbps) supported

A/D Converter (Max 16 channels)

[12-bit A/D Converter]

- Successive Approximation type
- Conversion time: Min 1.0 µs
- Priority conversion available (priority at 2 levels)
- Scanning conversion mode
- Built-in FIFO for conversion data storage (for SCAN conversion: 16steps, for Priority conversion: 4 steps)

D/A Converter (Max 2 channels)

- R-2R type
- 10-bit resolution

Base Timer (Max 8 channels)

Operation mode is selectable from the followings for each channel.

- 16-bit PWM timer
- 16-bit PPG timer
- 16-/32-bit reload timer
- 16-/32-bit PWC timer

General-Purpose I/O Port

This series can use its pins as general-purpose I/O ports when they are not used for peripherals. Moreover, the port relocate function is built in. It can set which I/O port the peripheral function can be allocated to.

- Capable of pull-up control per pin
- Capable of reading pin level directly
- Built-in the port relocate function
- Up to 84 high-speed general-purpose I/O Ports@100 pin Package

Some ports are 5V tolerant I/O

See List of Pin Functions and I/O Circuit Type to confirm the corresponding pins.

Multi-function Timer

The Multi-function timer is composed of the following blocks.

- 16-bit free-run timer × 3 ch.
- Input capture × 4 ch.
- Output compare × 6 ch.
- A/D activating compare × 3 ch.
- Waveform generator × 3 ch.
- 16-bit PPG timer × 3 ch.
  IGBT mode is contained

The following function can be used to achieve the motor control.

- PWM signal output function
- DC chopper waveform output function
- Dead time function
- Input capture function
- A/D convertor activate function
- DTIF (Motor emergency stop) interrupt function

HDMI-CEC/Remote Control Receiver (Up to 2 channels)

- HDMI- CEC receiver / Remote control receiver
  - Operating modes supporting the following standards can be selected
    SIRCS
    NEC/Association for Electric Home Appliances
    HDMI-CEC
  - Capable of adjusting detection timings for start bit and data bit
  - Equipped with noise filter
- HDMI-CEC transmitter
  - Header block automatic transmission by judging Signal free
  - Generating status interrupt by detecting Arbitration lost
  - Generating START, EOM, ACK automatically to output CEC transmission by setting 1 byte data
  - Generating transmission status interrupt when transmitting 1 block (1 byte data and EOM/ACK)

Real-time clock (RTC)

The Real-time clock can count Year/Month/Day/Hour/Minute/Second/A day of the week from 00 to 99.

- The interrupt function with specifying date and time (Year/Month/Day/Hour/Minute) is available. This function is also available by specifying only Year, Month, Day, Hour or Minute.
- Timer interrupt function after set time or each set time.
- Capable of rewriting the time with continuing the time count.
- Leap year automatic count is available.

External Interrupt Controller Unit

- Up to 16 external interrupt input pins
- Include one non-maskable interrupt (NMI) input pin

Watchdog Timer (2 channels)

A watchdog timer can generate interrupts or a reset when a time-out value is reached.

This series consists of two different watchdogs, a Hardware watchdog and a Software watchdog.

The Hardware watchdog timer is clocked by the built-in Low-speed CR oscillator. Therefore, the Hardware watchdog is active in any low-power consumption mode except RTC, Stop, Deep Standby RTC and Deep Standby Stop modes.

Clock and Reset

[Clocks]

Selectable from five clock sources (2 external oscillators, 2 built-in CR oscillators, and Main PLL).

- Main Clock: 4 MHz to 20 MHz
- Sub Clock: 32.768 kHz
- Built-in High-speed CR Clock: 4 MHz
- Built-in Low-speed CR Clock: 100 kHz
- Main PLL Clock

[Resets]

- Reset requests from INITX pin
- Power-on reset
- Software reset
- Watchdog timers reset
- Low-voltage detection reset
- Clock Super Visor reset

Clock Super Visor (CSV)

Clocks generated by built-in CR oscillators are used to supervise abnormality of the external clocks.

- If external clock failure (clock stop) is detected, reset is asserted.
- If external frequency anomaly is detected, interrupt or reset is asserted.

Low-Voltage Detector (LVD)

This Series includes 2-stage monitoring of voltage on the VCC. When the voltage falls below the voltage that has been set, Low-Voltage Detector generates an interrupt or reset.

- LVD1: error reporting via interrupt
- LVD2: auto-reset operation

Low-Power Consumption Mode

Six low-power consumption modes supported.

- Sleep
- Timer
- RTC
- Stop
- Deep Standby RTC
- Deep Standby Stop
- The back up register is 16 bytes.

Debug

Serial Wire JTAG Debug Port (SWJ-DP)

Power Supply

Wide range voltage: VCC = 1.8 V to 5.5 V

Table of Contents

1. Product Lineup 5
2. Packages 6
3. Pin Assignment 7
4. List of Pin Functions 10
5. I/O Circuit Type 30
6. Handling Precautions 35
6.1 Precautions for Product Design 35
6.2 Precautions for Package Mounting 36
6.3 Precautions for Use Environment 37
7. Handling Devices 38
8. Block Diagram 40
9. Memory Size 41
9.1 Memory Map 41
10. Pin Status in Each CPU State 45
11. Electrical Characteristics 52
11.1 Absolute Maximum Ratings 52
11.2 Recommended Operating Conditions 53
11.3 DC Characteristics 54
11.3.1 Current Rating 54
11.3.2 Pin Characteristics 57
11.4 AC Characteristics 58
11.4.1 Main Clock Input Characteristics 58
11.4.2 Sub Clock Input Characteristics 59
11.4.3 Built-in CR Oscillation Characteristics 59
11.4.4 Operating Conditions of Main PLL (In the Case of Using Main Clock for Input Clock of PLL) 60
11.4.5 Operating Conditions of Main PLL (In the case of using the built-in High-speed CR for the input clock of the Main PLL) 60
11.4.6 Reset Input Characteristics 61
11.4.7 Power-on Reset Timing 61
11.4.8 Base Timer Input Timing 62
11.4.9 CSIO/UART Timing 63
11.4.10 External Input Timing 72
11.4.11 I^2C Timing 73
11.4.12 JTAG Timing 74
11.5 12-bit A/D Converter 75
11.6 10-bit D/A Converter 78
11.7 Low-Voltage Detection Characteristics 79
11.7.1 Low-Voltage Detection Reset 79
11.7.2 Interrupt of Low-Voltage Detection 80
11.8 Flash Memory Write/Erase Characteristics 82
11.9 Return Time from Low-Power Consumption Mode 83
11.9.1 Return Factor: Interrupt/WKUP 83
11.9.2 Return Factor: Reset 85
12. Ordering Information 87
13. Package Dimensions 88
14. Major Changes 92
Document History 94
Sales, Solutions, and Legal Information 95

1. Product Lineup

Memory Size

Product name		CY9AF131M/N	CY9AF132M/N
On-chip Flash memory		64 Kbytes	128 Kbytes
On-chip SRAM	SRAM1	12 Kbytes	16 Kbytes

Function

Product name			CY9AF131M CY9AF132M	CY9AF131N CY9AF132N
Pin count			80	100
CPU			Cortex-M3	
	Freq.		20 MHz	
Power supply voltage range			1.8 V to 5.5 V	
Multi-function Serial Interface (UART/CSIO/I^{2}C)			8 ch. (Max)	
Base Timer (PWC/ Reload timer/PWM/PPG)			8 ch. (Max)	
MF-Timer	A/D activation compare	3 ch.	1 unit (Max)	
	Input capture	4 ch.		
	Free-run timer	3 ch.		
	Output compare	6 ch.		
	Waveform generator	3 ch.		
	PPG (IGBT mode)	3 ch.		
HDMI-CEC/ Remote Control Receiver			2 ch. (Max)	
Real-time clock (RTC)			1 unit	
Watchdog timer			1 ch. (SW) + 1 ch. (HW)	
External Interrupts			11 pins (Max) + NMI × 1	16 pins (Max) + NMI × 1
General-purpose I/O ports			67 pins (Max)	84 pins (Max)
12-bit A/D converter			12 ch. (1 unit)	16 ch. (1 unit)
10-bit D/A converter			2 ch. (Max)	
CSV (Clock Super Visor)			Yes	
LVD (Low-Voltage Detector)			2 ch.	
Built-in CR	High-speed		4 MHz	
	Low-speed		100 kHz	
Debug Function			SWJ-DP	

Note:

- *All signals of the peripheral function in each product cannot be allocated by limiting the pins of package. It is necessary to use the port relocate function of the I/O port according to your function use.*
  See 11.Electrical Characteristics 11.4.AC Characteristics 11.4.3.Built-in CR Oscillation Characteristics for accuracy of built-in CR.

2. Packages

Package \ Product name		CY9AF131M CY9AF132M	CY9AF131N CY9AF132N
LQFP:	LQH080 (0.5 mm pitch)	❍	-
LQFP:	LQJ080 (0.65 mm pitch)	❍	-
LQFP:	LQI100 (0.5 mm pitch)	-	❍
QFP:	PQH100 (0.65 mm pitch)	-	❍

❍ **:** Supported

Note:

− *See 13 Package Dimensions for detailed information on each package.*

3. Pin Assignment

LQH080/LQJ080

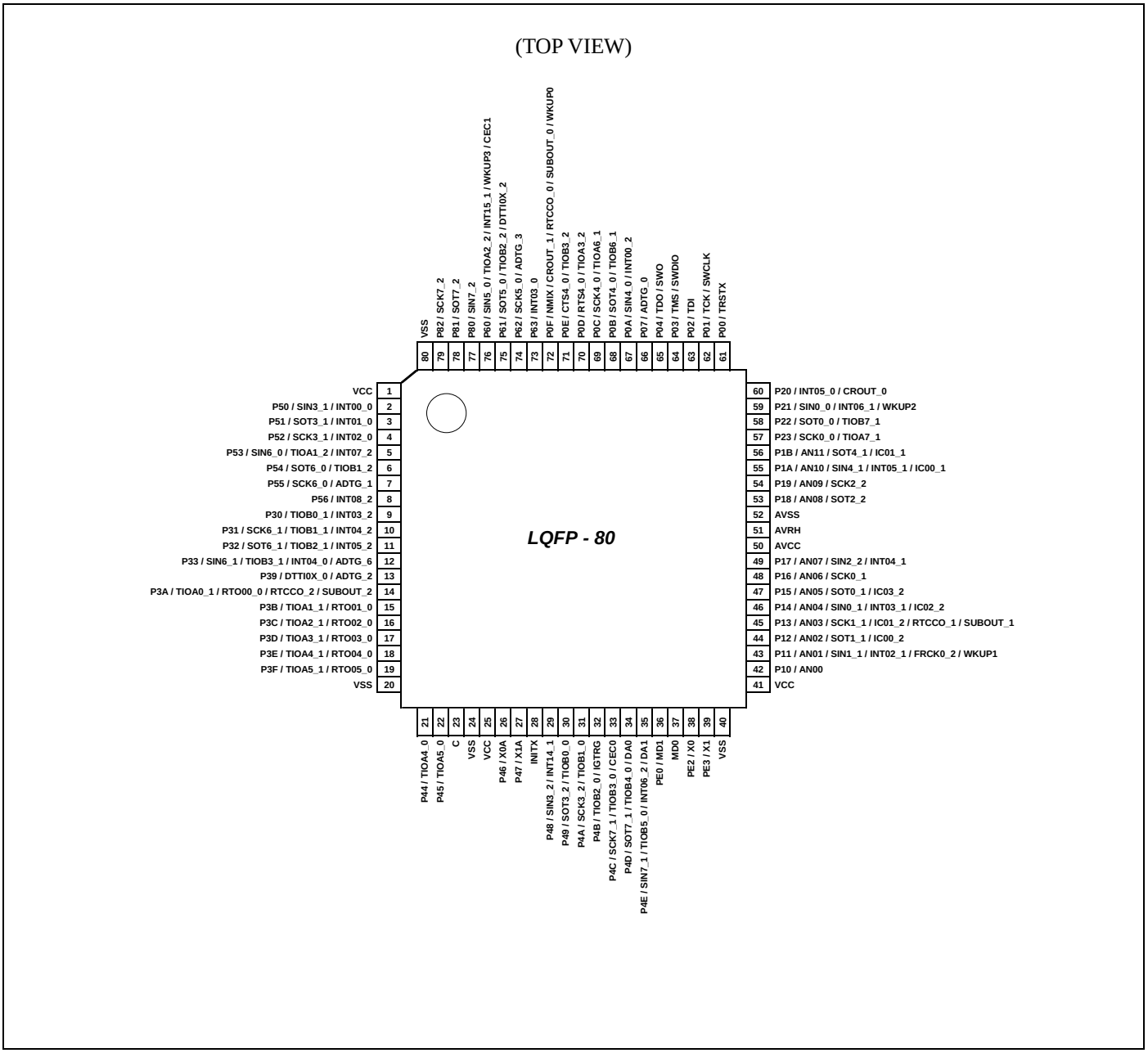

Note:

- *The number after the underscore ("_") in pin names such as XXX_1 and XXX_2 indicates the relocated port number. For these pins, there are multiple pins that provide the same function for the same channel. Use the extended port function register (EPFR) to select the pin.*

LQI100

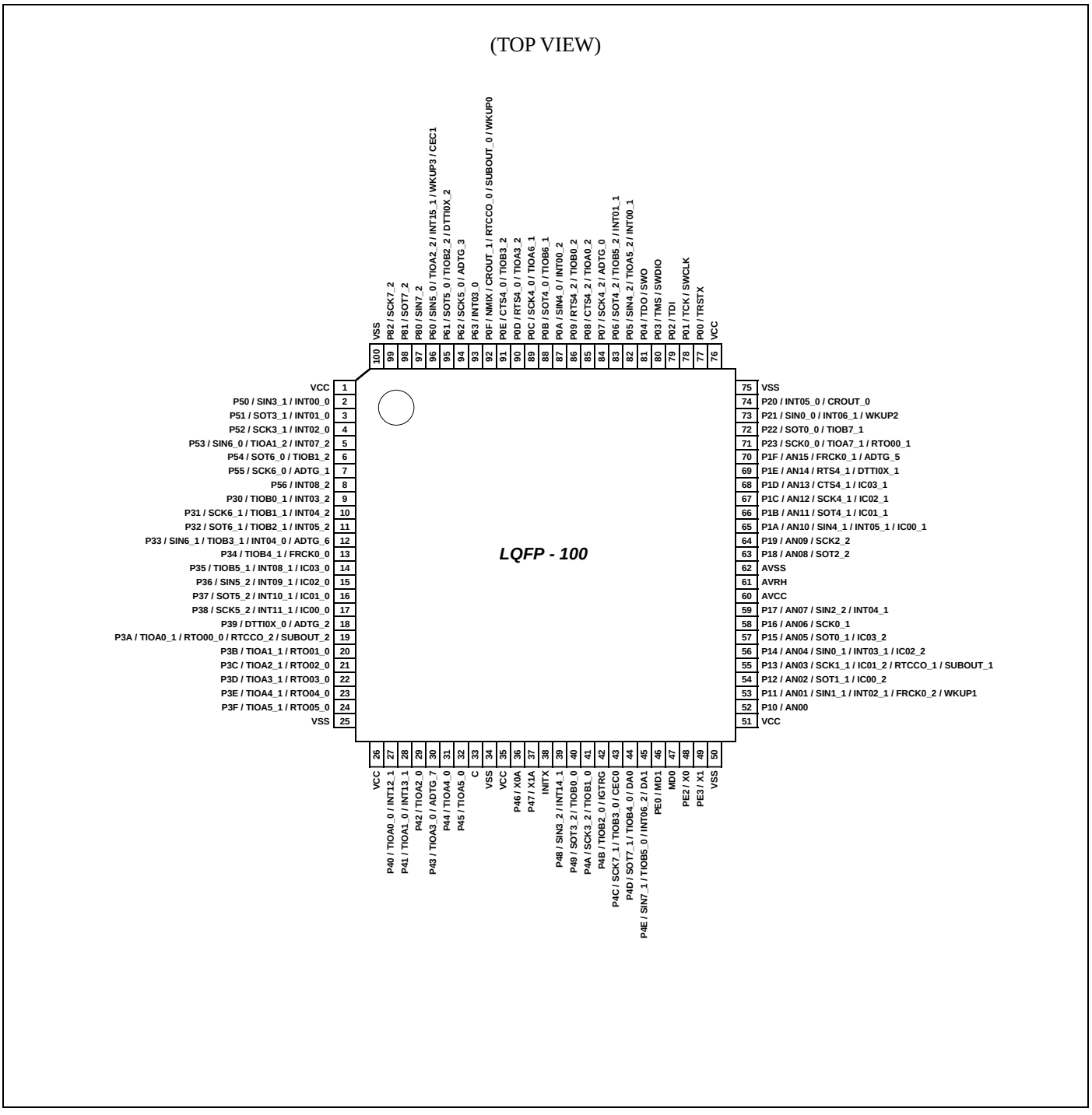

Note:

- *The number after the underscore ("_") in pin names such as XXX_1 and XXX_2 indicates the relocated port number. For these pins, there are multiple pins that provide the same function for the same channel.*
  Use the extended port function register (EPFR) to select the pin.

PQH100

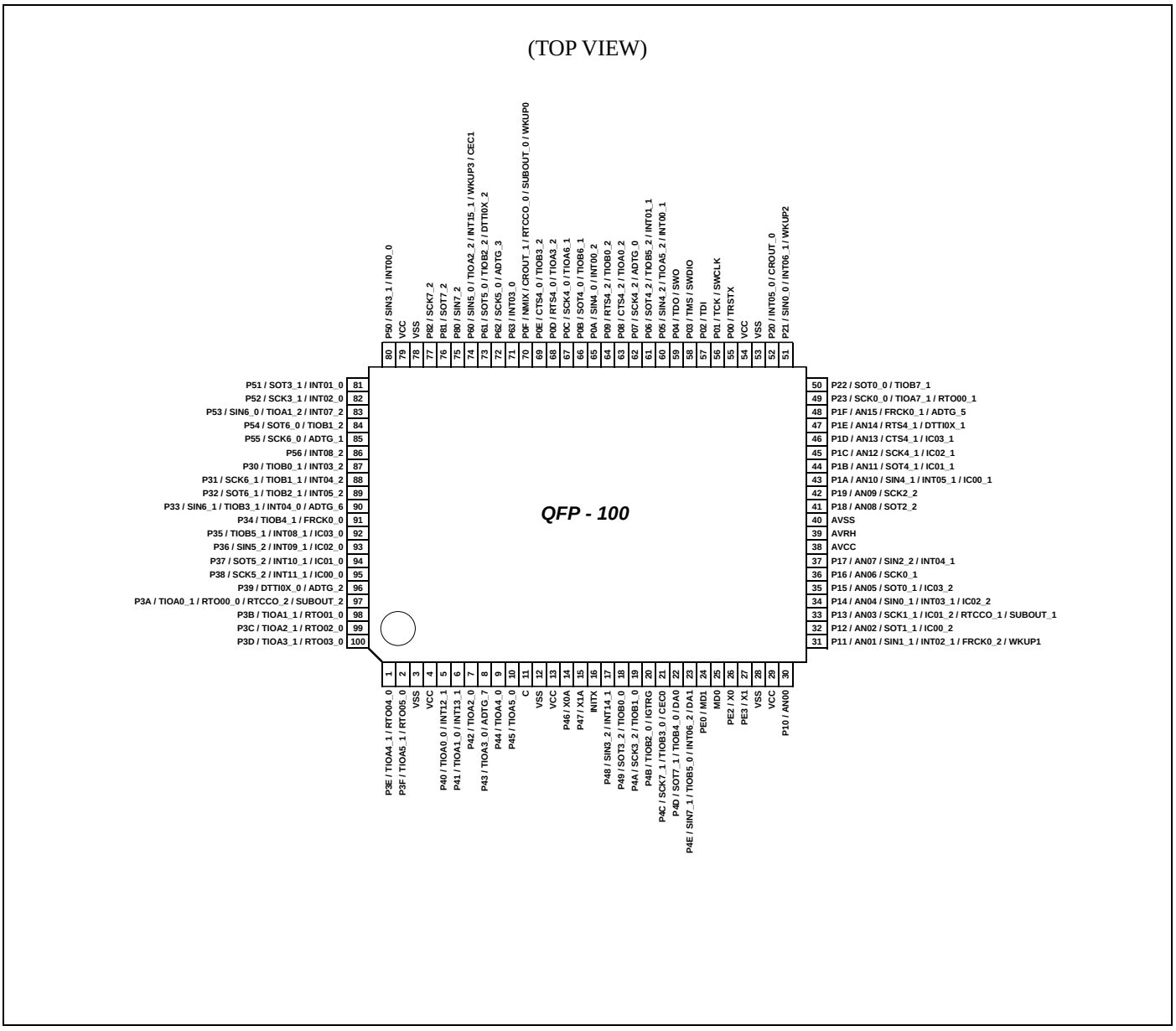

Note:

- *The number after the underscore ("_") in pin names such as XXX_1 and XXX_2 indicates the relocated port number. For these pins, there are multiple pins that provide the same function for the same channel.*
  Use the extended port function register (EPFR) to select the pin.

4. List of Pin Functions

List of pin numbers

The number after the underscore ("_") in pin names such as XXX_1 and XXX_2 indicates the relocated port number. For these pins, there are multiple pins that provide the same function for the same channel.

Use the extended port function register (EPFR) to select the pin.

Pin No			Pin name	I/O circuit type	Pin state type
LQFP-80	LQFP-100	QFP-100			
1	1	79	VCC	-	
2	2	80	P50 INT00_0 SIN3_1	E	F
3	3	81	P51 INT01_0 SOT3_1 (SDA3_1)	E	F
4	4	82	P52 INT02_0 SCK3_1 (SCL3_1)	E	F
5	5	83	P53 SIN6_0 TIOA1_2 INT07_2	E	F
6	6	84	P54 SOT6_0 (SDA6_0) TIOB1_2	E	H
7	7	85	P55 SCK6_0 (SCL6_0) ADTG_1	E	H
8	8	86	P56 INT08_2	E	O
9	9	87	P30 TIOB0_1 INT03_2	E	F

Pin No			Pin name	I/O circuit type	Pin state type
LQFP-80	LQFP-100	QFP-100			
10	10	88	P31 TIOB1_1 SCK6_1 (SCL6_1) INT04_2	E	F
11	11	89	P32 TIOB2_1 SOT6_1 (SDA6_1) INT05_2	E	F
12	12	90	P33 INT04_0 TIOB3_1 SIN6_1 ADTG_6	E	F
-	13	91	P34 FRCK0_0 TIOB4_1	E	H
-	14	92	P35 IC03_0 TIOB5_1 INT08_1	E	F
-	15	93	P36 IC02_0 SIN5_2 INT09_1	E	F
-	16	94	P37 IC01_0 SOT5_2 (SDA5_2) INT10_1	E	F
-	17	95	P38 IC00_0 SCK5_2 (SCL5_2) INT11_1	E	F

Pin No			Pin name	I/O circuit type	Pin state type
LQFP-80	LQFP-100	QFP-100			
13	18	96	P39	E	H
			DTTI0X_0		
			ADTG_2		
14	19	97	P3A	E	H
			RTO00_0 (PPG00_0)		
			TIOA0_1		
			RTCCO_2		
			SUBOUT_2		
15	20	98	P3B	E	H
			RTO01_0 (PPG00_0)		
			TIOA1_1		
16	21	99	P3C	E	H
			RTO02_0 (PPG02_0)		
			TIOA2_1		
17	22	100	P3D	E	H
			RTO03_0 (PPG02_0)		
			TIOA3_1		
18	23	1	P3E	E	H
			RTO04_0 (PPG04_0)		
			TIOA4_1		
19	24	2	P3F	E	H
			RTO05_0 (PPG04_0)		
			TIOA5_1		
20	25	3	VSS	-	
-	26	4	VCC	-	
-	27	5	P40	E	F
			TIOA0_0		
			INT12_1		
-	28	6	P41	E	F
			TIOA1_0		
			INT13_1		

Pin No			Pin name	I/O circuit type	Pin state type
LQFP-80	LQFP-100	QFP-100			
-	29	7	P42	E	H
			TIOA2_0		
-	30	8	P43	E	H
			TIOA3_0		
			ADTG_7		
21	31	9	P44	E	H
			TIOA4_0		
22	32	10	P45	E	H
			TIOA5_0		
23	33	11	C	-	
24	34	12	VSS	-	
25	35	13	VCC	-	
26	36	14	P46	D	M
			X0A		
27	37	15	P47	D	N
			X1A		
28	38	16	INITX	B	C
29	39	17	P48	E	F
			INT14_1		
			SIN3_2		
30	40	18	P49	E	H
			TIOB0_0		
			SOT3_2 (SDA3_2)		
31	41	19	P4A	E	H
			TIOB1_0		
			SCK3_2 (SCL3_2)		
32	42	20	P4B	E	H
			TIOB2_0		
			IGTRG		
33	43	21	P4C	G	Q
			TIOB3_0		
			SCK7_1 (SCL7_1)		
			CEC0		

Pin No			Pin name	I/O circuit type	Pin state type
LQFP-80	LQFP-100	QFP-100			
34	44	22	P4D	J	T
			TIOB4_0		
			SOT7_1 (SDA7_1)		
			DA0		
35	45	23	P4E	J	S
			TIOB5_0		
			INT06_2		
			SIN7_1		
			DA1		
36	46	24	PE0	C	P
			MD1		
37	47	25	MD0	H	D
38	48	26	PE2	A	A
			X0		
39	49	27	PE3	A	B
			X1		
40	50	28	VSS	-	
41	51	29	VCC	-	
42	52	30	P10	F	J
			AN00		
43	53	31	P11	F	L
			AN01		
			SIN1_1		
			INT02_1		
			FRCK0_2		
			WKUP1		
44	54	32	P12	F	J
			AN02		
			SOT1_1 (SDA1_1)		
			IC00_2		

Pin No			Pin name	I/O circuit type	Pin state type
LQFP-80	LQFP-100	QFP-100			
45	55	33	P13 AN03 SCK1_1 (SCL1_1) IC01_2 RTCCO_1 SUBOUT_1	F	J
46	56	34	P14 AN04 SIN0_1 INT03_1 IC02_2	F	K
47	57	35	P15 AN05 SOT0_1 IC03_2	F	J
48	58	36	P16 AN06 SCK0_1 (SCL0_1)	F	J
49	59	37	P17 AN07 SIN2_2 INT04_1	F	K
50	60	38	AVCC	-	
51	61	39	AVRH	-	
52	62	40	AVSS	-	
53	63	41	P18 AN08 SOT2_2 (SDA2_2)	F	J
54	64	42	P19 AN09 SCK2_2 (SCL2_2)	F	J

Pin No			Pin name	I/O circuit type	Pin state type
LQFP-80	LQFP-100	QFP-100			
55	65	43	P1A AN10 SIN4_1 INT05_1 IC00_1	F	K
56	66	44	P1B AN11 SOT4_1 (SDA4_1) IC01_1	F	J
-	67	45	P1C AN12 SCK4_1 (SCL4_1) IC02_1	F	J
-	68	46	P1D AN13 CTS4_1 IC03_1	F	J
-	69	47	P1E AN14 RTS4_1 DTTI0X_1	F	J
-	70	48	P1F AN15 ADTG_5 FRCK0_1	F	J
57	71	49	P23 SCK0_0 (SCL0_0) TIOA7_1	E	H
-			RTO00_1		
58	72	50	P22 SOT0_0 (SDA0_0) TIOB7_1	E	H

Pin No			Pin name	I/O circuit type	Pin state type
LQFP-80	LQFP-100	QFP-100			
59	73	51	P21 SIN0_0 INT06_1 WKUP2	E	G
60	74	52	P20 INT05_0 CROUT_0	E	F
-	75	53	VSS	-	
-	76	54	VCC	-	
61	77	55	P00 TRSTX	E	E
62	78	56	P01 TCK SWCLK	E	E
63	79	57	P02 TDI	E	E
64	80	58	P03 TMS SWDIO	E	E
65	81	59	P04 TDO SWO	E	E
-	82	60	P05 TIOA5_2 SIN4_2 INT00_1	E	F
-	83	61	P06 TIOB5_2 SOT4_2 (SDA4_2) INT01_1	E	F
66 -	84	62	P07 ADTG_0 SCK4_2 (SCL4_2)	E	H
-	85	63	P08 TIOA0_2 CTS4_2	E	H

Pin No			Pin name	I/O circuit type	Pin state type
LQFP-80	LQFP-100	QFP-100			
-	86	64	P09 TIOB0_2 RTS4_2	E	H
67	87	65	P0A SIN4_0 INT00_2	G	F
68	88	66	P0B SOT4_0 (SDA4_0) TIOB6_1	G	H
69	89	67	P0C SCK4_0 (SCL4_0) TIOA6_1	G	H
70	90	68	P0D RTS4_0 TIOA3_2	E	H
71	91	69	P0E CTS4_0 TIOB3_2	E	H
72	92	70	P0F NMIX CROUT_1 RTCCO_0 SUBOUT_0 WKUP0	E	I
73	93	71	P63 INT03_0	E	O
74	94	72	P62 SCK5_0 (SCL5_0) ADTG_3	E	H
75	95	73	P61 SOT5_0 (SDA5_0) TIOB2_2 DTTI0X_2	E	H

Pin No			Pin name	I/O circuit type	Pin state type
LQFP-80	LQFP-100	QFP-100			
76	96	74	P60	G	R
			SIN5_0		
			TIOA2_2		
			INT15_1		
			WKUP3		
			CEC1		
77	97	75	P80	G	H
			SIN7_2		
78	98	76	P81	G	H
			SOT7_2		
79	99	77	P82	G	H
			SCK7_2		
80	100	78	VSS	-	

List of pin functions

The number after the underscore ("_") in pin names such as XXX_1 and XXX_2 indicates the relocated port number. For these pins, there are multiple pins that provide the same function for the same channel. Use the extended port function register (EPFR) to select the pin.

Pin function	Pin name	Function description	Pin No		
			LQFP-80	LQFP-100	QFP-100
ADC	ADTG_0	A/D converter external trigger input pin	66	84	62
	ADTG_1		7	7	85
	ADTG_2		13	18	96
	ADTG_3		74	94	72
	ADTG_4		-	-	-
	ADTG_5		-	70	48
	ADTG_6		12	12	90
	ADTG_7		-	30	8
	ADTG_8		-	-	-
	AN00	A/D converter analog input pin. ANxx describes ADC ch.xx.	42	52	30
	AN01		43	53	31
	AN02		44	54	32
	AN03		45	55	33
	AN04		46	56	34
	AN05		47	57	35
	AN06		48	58	36
	AN07		49	59	37
	AN08		53	63	41
	AN09		54	64	42
	AN10		55	65	43
	AN11		56	66	44
	AN12		-	67	45
	AN13		-	68	46
	AN14		-	69	47
	AN15		-	70	48
Base Timer 0	TIOA0_0	Base timer ch.0 TIOA pin	-	27	5
	TIOA0_1		14	19	97
	TIOA0_2		-	85	63
	TIOB0_0	Base timer ch.0 TIOB pin	30	40	18
	TIOB0_1		9	9	87
	TIOB0_2		-	86	64
Base Timer 1	TIOA1_0	Base timer ch.1 TIOA pin	-	28	6
	TIOA1_1		15	20	98
	TIOA1_2		5	5	83
	TIOB1_0	Base timer ch.1 TIOB pin	31	41	19
	TIOB1_1		10	10	88
	TIOB1_2		6	6	84

Pin function	Pin name	Function description	Pin No		
			LQFP-80	LQFP-100	QFP-100
Base Timer 2	TIOA2_0	Base timer ch.2 TIOA pin	-	29	7
	TIOA2_1		16	21	99
	TIOA2_2		76	96	74
	TIOB2_0	Base timer ch.2 TIOB pin	32	42	20
	TIOB2_1		11	11	89
	TIOB2_2		75	95	73
Base Timer 3	TIOA3_0	Base timer ch.3 TIOA pin	-	30	8
	TIOA3_1		17	22	100
	TIOA3_2		70	90	68
	TIOB3_0	Base timer ch.3 TIOB pin	33	43	21
	TIOB3_1		12	12	90
	TIOB3_2		71	91	69
Base Timer 4	TIOA4_0	Base timer ch.4 TIOA pin	21	31	9
	TIOA4_1		18	23	1
	TIOA4_2		-	-	-
	TIOB4_0	Base timer ch.4 TIOB pin	34	44	22
	TIOB4_1		-	13	91
	TIOB4_2		-	-	-
Base Timer 5	TIOA5_0	Base timer ch.5 TIOA pin	22	32	10
	TIOA5_1		19	24	2
	TIOA5_2		-	82	60
	TIOB5_0	Base timer ch.5 TIOB pin	35	45	23
	TIOB5_1		-	14	92
	TIOB5_2		-	83	61
Base Timer 6	TIOA6_1	Base timer ch.6 TIOA pin	69	89	67
	TIOB6_1	Base timer ch.6 TIOB pin	68	88	66
Base Timer 7	TIOA7_0	Base timer ch.7 TIOA pin	-	-	-
	TIOA7_1		57	71	49
	TIOA7_2		-	-	-
	TIOB7_0	Base timer ch.7 TIOB pin	-	-	-
	TIOB7_1		58	72	50
	TIOB7_2		-	-	-
Debugger	SWCLK	Serial wire debug interface clock input pin	62	78	56
	SWDIO	Serial wire debug interface data input / output pin	64	80	58
	SWO	Serial wire viewer output pin	65	81	59
	TRSTX	JTAG reset input pin	61	77	55
	TCK	JTAG test clock input pin	62	78	56
	TDI	JTAG test data input pin	63	79	57
	TMS	JTAG test mode state input/output pin	64	80	58
	TDO	JTAG debug data output pin	65	81	59

Pin function	Pin name	Function description	Pin No		
			LQFP-80	LQFP-100	QFP-100
External Interrupt	INT00_0	External interrupt request 00 input pin	2	2	80
	INT00_1		-	82	60
	INT00_2		67	87	65
	INT01_0	External interrupt request 01 input pin	3	3	81
	INT01_1		-	83	61
	INT02_0	External interrupt request 02 input pin	4	4	82
	INT02_1		43	53	31
	INT03_0	External interrupt request 03 input pin	73	93	71
	INT03_1		46	56	34
	INT03_2		9	9	87
	INT04_0	External interrupt request 04 input pin	12	12	90
	INT04_1		49	59	37
	INT04_2		10	10	88
	INT05_0	External interrupt request 05 input pin	60	74	52
	INT05_1		55	65	43
	INT05_2		11	11	89
	INT06_1	External interrupt request 06 input pin	59	73	51
	INT06_2		35	45	23
	INT07_2	External interrupt request 07 input pin	5	5	83
	INT08_1	External interrupt request 08 input pin	-	14	92
	INT08_2		8	8	86
	INT09_1	External interrupt request 09 input pin	-	15	93
	INT10_1	External interrupt request 10 input pin	-	16	94
	INT11_1	External interrupt request 11 input pin	-	17	95
	INT12_1	External interrupt request 12 input pin	-	27	5
	INT13_1	External interrupt request 13 input pin	-	28	6
	INT14_1	External interrupt request 14 input pin	29	39	17
	INT15_1	External interrupt request 15 input pin	76	96	74
	NMIX	Non-Maskable Interrupt input pin	72	92	70

Pin function	Pin name	Function description	Pin No		
			LQFP-80	LQFP-100	QFP-100
GPIO	P00	General-purpose I/O port 0	61	77	55
	P01		62	78	56
	P02		63	79	57
	P03		64	80	58
	P04		65	81	59
	P05		-	82	60
	P06		-	83	61
	P07		66	84	62
	P08		-	85	63
	P09		-	86	64
	P0A		67	87	65
	P0B		68	88	66
	P0C		69	89	67
	P0D		70	90	68
	P0E		71	91	69
	P0F		72	92	70
	P10	General-purpose I/O port 1	42	52	30
	P11		43	53	31
	P12		44	54	32
	P13		45	55	33
	P14		46	56	34
	P15		47	57	35
	P16		48	58	36
	P17		49	59	37
	P18		53	63	41
	P19		54	64	42
	P1A		55	65	43
	P1B		56	66	44
	P1C		-	67	45
	P1D		-	68	46
	P1E		-	69	47
	P1F		-	70	48
	P20	General-purpose I/O port 2	60	74	52
	P21		59	73	51
	P22		58	72	50
	P23		57	71	49

Pin function	Pin name	Function description	Pin No		
			LQFP-80	LQFP-100	QFP-100
GPIO	P30	General-purpose I/O port 3	9	9	87
	P31		10	10	88
	P32		11	11	89
	P33		12	12	90
	P34		-	13	91
	P35		-	14	92
	P36		-	15	93
	P37		-	16	94
	P38		-	17	95
	P39		13	18	96
	P3A		14	19	97
	P3B		15	20	98
	P3C		16	21	99
	P3D		17	22	100
	P3E		18	23	1
	P3F		19	24	2
	P40	General-purpose I/O port 4	-	27	5
	P41		-	28	6
	P42		-	29	7
	P43		-	30	8
	P44		21	31	9
	P45		22	32	10
	P46		26	36	14
	P47		27	37	15
	P48		29	39	17
	P49		30	40	18
	P4A		31	41	19
	P4B		32	42	20
	P4C		33	43	21
	P4D		34	44	22
	P4E		35	45	23
	P50	General-purpose I/O port 5	2	2	80
	P51		3	3	81
	P52		4	4	82
	P53		5	5	83
	P54		6	6	84
	P55		7	7	85
	P56		8	8	86

Pin function	Pin name	Function description	Pin No		
			LQFP-80	LQFP-100	QFP-100
GPIO	P60	General-purpose I/O port 6	76	96	74
	P61		75	95	73
	P62		74	94	72
	P63		73	93	71
	P80	General-purpose I/O port 8	77	97	75
	P81		78	98	76
	P82		79	99	77
	PE0	General-purpose I/O port E	36	46	24
	PE2		38	48	26
	PE3		39	49	27
Multi-function Serial 0	SIN0_0	Multi-function serial interface ch.0 input pin	59	73	51
	SIN0_1		46	56	34
	SOT0_0 (SDA0_0)	Multi-function serial interface ch.0 output pin. This pin operates as SOT0 when it is used in a UART/CSIO (operation modes 0 to 2) and as SDA0 when it is used in an I^2C (operation mode 4).	58	72	50
	SOT0_1 (SDA0_1)		47	57	35
	SCK0_0 (SCL0_0)	Multi-function serial interface ch.0 clock I/O pin. This pin operates as SCK0 when it is used in a UART/CSIO (operation modes 0 to 2) and as SCL0 when it is used in an I^2C (operation mode 4).	57	71	49
	SCK0_1 (SCL0_1)		48	58	36
Multi-function Serial 1	SIN1_1	Multi-function serial interface ch.1 input pin	43	53	31
	SOT1_1 (SDA1_1)	Multi-function serial interface ch.1 output pin. This pin operates as SOT1 when it is used in a UART/CSIO (operation modes 0 to 2) and as SDA1 when it is used in an I^2C (operation mode 4).	44	54	32
	SCK1_1 (SCL1_1)	Multi-function serial interface ch.1 clock I/O pin. This pin operates as SCK1 when it is used in a UART/CSIO (operation modes 0 to 2) and as SCL1 when it is used in an I^2C (operation mode 4).	45	55	33
Multi-function Serial 2	SIN2_2	Multi-function serial interface ch.2 input pin	49	59	37
	SOT2_2 (SDA2_2)	Multi-function serial interface ch.2 output pin. This pin operates as SOT2 when it is used in a UART/CSIO (operation modes 0 to 2) and as SDA2 when it is used in an I^2C (operation mode 4).	53	63	41
	SCK2_2 (SCL2_2)	Multi-function serial interface ch.2 clock I/O pin.This pin operates as SCK2 when it is used in a UART/CSIO (operation modes 0 to 2) and as SCL2 when it is used in an I^2C (operation mode 4).	54	64	42

Pin function	Pin name	Function description	Pin No		
			LQFP-80	LQFP-100	QFP-100
Multi-function Serial 3	SIN3_1	Multi-function serial interface ch.3 input pin	2	2	80
	SIN3_2		29	39	17
	SOT3_1 (SDA3_1)	Multi-function serial interface ch.3 output pin. This pin operates as SOT3 when it is used in a UART/CSIO (operation modes 0 to 2) and as SDA3 when it is used in an I^2C (operation mode 4).	3	3	81
	SOT3_2 (SDA3_2)		30	40	18
	SCK3_1 (SCL3_1)	Multi-function serial interface ch.3 clock I/O pin. This pin operates as SCK3 when it is used in a UART/CSIO (operation modes 0 to 2) and as SCL3 when it is used in an I^2C (operation mode 4).	4	4	82
	SCK3_2 (SCL3_2)		31	41	19
Multi-function Serial 4	SIN4_0	Multi-function serial interface ch.4 input pin	67	87	65
	SIN4_1		55	65	43
	SIN4_2		-	82	60
	SOT4_0 (SDA4_0)	Multi-function serial interface ch.4 output pin. This pin operates as SOT4 when it is used in a UART/CSIO (operation modes 0 to 2) and as SDA4 when it is used in an I^2C (operation mode 4).	68	88	66
	SOT4_1 (SDA4_1)		56	66	44
	SOT4_2 (SDA4_2)		-	83	61
	SCK4_0 (SCL4_0)	Multi-function serial interface ch.4 clock I/O pin. This pin operates as SCK4 when it is used in a UART/CSIO (operation modes 0 to 2) and as SCL4 when it is used in an I^2C (operation mode 4).	69	89	67
	SCK4_1 (SCL4_1)		-	67	45
	SCK4_2 (SCL4_2)		-	84	62
	RTS4_0	Multi-function serial interface ch.4 RTS output pin	70	90	68
	RTS4_1		-	69	47
	RTS4_2		-	86	64
	CTS4_0	Multi-function serial interface ch.4 CTS input pin	71	91	69
	CTS4_1		-	68	46
	CTS4_2		-	85	63

Pin function	Pin name	Function description	Pin No		
			LQFP-80	LQFP-100	QFP-100
Multi-function Serial 5	SIN5_0	Multi-function serial interface ch.5 input pin	76	96	74
	SIN5_2		-	15	93
	SOT5_0 (SDA5_0)	Multi-function serial interface ch.5 output pin. This pin operates as SOT5 when it is used in a UART/CSIO (operation modes 0 to 2) and as SDA5 when it is used in an I^2C (operation mode 4).	75	95	73
	SOT5_2 (SDA5_2)		-	16	94
	SCK5_0 (SCL5_0)	Multi-function serial interface ch.5 clock I/O pin. This pin operates as SCK5 when it is used in a UART/CSIO (operation modes 0 to 2) and as SCL5 when it is used in an I^2C (operation mode 4).	74	94	72
	SCK5_2 (SCL5_2)		-	17	95
Multi-function Serial 6	SIN6_0	Multi-function serial interface ch.6 input pin	5	5	83
	SIN6_1		12	12	90
	SOT6_0 (SDA6_0)	Multi-function serial interface ch.6 output pin. This pin operates as SOT6 when it is used in a UART/CSIO (operation modes 0 to 2) and as SDA6 when it is used in an I^2C (operation mode 4).	6	6	84
	SOT6_1 (SDA6_1)		11	11	89
	SCK6_0 (SCL6_0)	Multi-function serial interface ch.6 clock I/O pin. This pin operates as SCK6 when it is used in a UART/CSIO (operation modes 0 to 2) and as SCL6 when it is used in an I^2C (operation mode 4).	7	7	85
	SCK6_1 (SCL6_1)		10	10	88
Multi-function Serial 7	SIN7_1	Multi-function serial interface ch.7 input pin	35	45	23
	SIN7_2		77	97	75
	SOT7_1 (SDA7_1)	Multi-function serial interface ch.7 output pin. This pin operates as SOT7 when it is used in a UART/CSIO (operation modes 0 to 2) and as SDA7 when it is used in an I^2C (operation mode 4).	34	44	22
	SOT7_2 (SDA7_2)		78	98	76
	SCK7_1 (SCL7_1)	Multi-function serial interface ch.7 clock I/O pin. This pin operates as SCK7 when it is used in a UART/CSIO (operation modes 0 to 2) and as SCL7 when it is used in an I^2C (operation mode 4).	33	43	21
	SCK7_2 (SCL7_2)		79	99	77

Pin function	Pin name	Function description	Pin No		
			LQFP-80	LQFP-100	QFP-100
Multi-function Timer 0	DTTI0X_0	Input signal of waveform generator to control outputs RTO00 to RTO05 of Multi-function timer 0	13	18	96
	DTTI0X_1		-	69	47
	DTTI0X_2		75	95	73
	FRCK0_0	16-bit free-run timer ch.0 external clock input pin	-	13	91
	FRCK0_1		-	70	48
	FRCK0_2		43	53	31
	IC00_0	16-bit input capture input pin of Multi-function timer 0. ICxx describes a channel number.	-	17	95
	IC00_1		55	65	43
	IC00_2		44	54	32
	IC01_0		-	16	94
	IC01_1		56	66	44
	IC01_2		45	55	33
	IC02_0		-	15	93
	IC02_1		-	67	45
	IC02_2		46	56	34
	IC03_0		-	14	92
	IC03_1		-	68	46
	IC03_2		47	57	35
	RTO00_0 (PPG00_0)	Waveform generator output pin of Multi-function timer 0. This pin operates as PPG00 when it is used in PPG0 output mode.	14	19	97
	RTO00_1 (PPG00_1)		-	71	49
	RTO01_0 (PPG00_0)	Waveform generator output pin of Multi-function timer 0. This pin operates as PPG00 when it is used in PPG0 output mode.	15	20	98
	RTO02_0 (PPG02_0)	Waveform generator output pin of Multi-function timer 0. This pin operates as PPG02 when it is used in PPG0 output mode.	16	21	99
	RTO03_0 (PPG02_0)	Waveform generator output pin of Multi-function timer 0. This pin operates as PPG02 when it is used in PPG0 output mode.	17	22	100
	RTO04_0 (PPG04_0)	Waveform generator output pin of Multi-function timer 0. This pin operates as PPG04 when it is used in PPG0 output mode.	18	23	1
	RTO05_0 (PPG04_0)	Waveform generator output pin of Multi-function timer 0. This pin operates as PPG04 when it is used in PPG0 output mode.	19	24	2
	IGTRG	PPG IGBT mode external trigger input pin	32	42	20
Real-time clock	RTCCO_0	Pulse output pin of Real-time clock	72	92	70
	RTCCO_1		45	55	33
	RTCCO_2		14	19	97
	SUBOUT_0	Sub clock output pin	72	92	70
	SUBOUT_1		45	55	33
	SUBOUT_2		14	19	97

Pin function	Pin name	Function description	Pin No		
			LQFP-80	LQFP-100	QFP-100
Low-Power Consumption Mode	WKUP0	Deep standby mode return signal input pin 0	72	92	70
	WKUP1	Deep standby mode return signal input pin 1	43	53	31
	WKUP2	Deep standby mode return signal input pin 2	59	73	51
	WKUP3	Deep standby mode return signal input pin 3	76	96	74
DAC	DA0	D/A converter ch.0 analog output pin	34	44	22
	DA1	D/A converter ch.1 analog output pin	35	45	23
HDMI-CEC	CEC0	HDMI-CEC ch.0 pin	33	43	21
	CEC1	HDMI-CEC ch.1 pin	76	96	74
Reset	INITX	External Reset Input Pin. A reset is valid when INITX = L.	28	38	16
Mode	MD0	Mode 0 pin. During normal operation, MD0 = L must be input. During serial programming to Flash memory, MD0 = H must be input.	37	47	25
	MD1	Mode 1 pin. During normal operation, input is not needed. During serial programming to Flash memory, MD1 = L must be input.	36	46	24
Power	VCC	Power supply pin	1	1	79
			-	26	4
			25	35	13
			41	51	29
			-	76	54
GND	VSS	GND pin	20	25	3
			24	34	12
			40	50	28
			-	75	53
			80	100	78
Clock	X0	Main clock (oscillation) input pin	38	48	26
	X0A	Sub clock (oscillation) input pin	26	36	14
	X1	Main clock (oscillation) I/O pin	39	49	27
	X1A	Sub clock (oscillation) I/O pin	27	37	15
	CROUT_0	Built-in High-speed CR-osc clock output port	60	74	52
	CROUT_1		72	92	70
Analog Power	AVCC	A/D converter and D/A converter analog power supply pin	50	60	38
	AVRH	A/D converter analog reference voltage input pin	51	61	39
Analog GND	AVSS	A/D converter and D/A converter GND pin	52	62	40
C pin	C	Power supply stabilization capacity pin	23	33	11

Note:

- *While this device contains a Test Access Port (TAP) based on the IEEE 1149.1-2001 JTAG standard, it is not fully compliant to all requirements of that standard. This device may contain a 32-bit device ID that is the same as the 32-bit device ID in other devices with different functionality. The TAP pins may also be configurable for purposes other than access to the TAP controller.*

5. I/O Circuit Type

Type	Circuit	Remarks
A	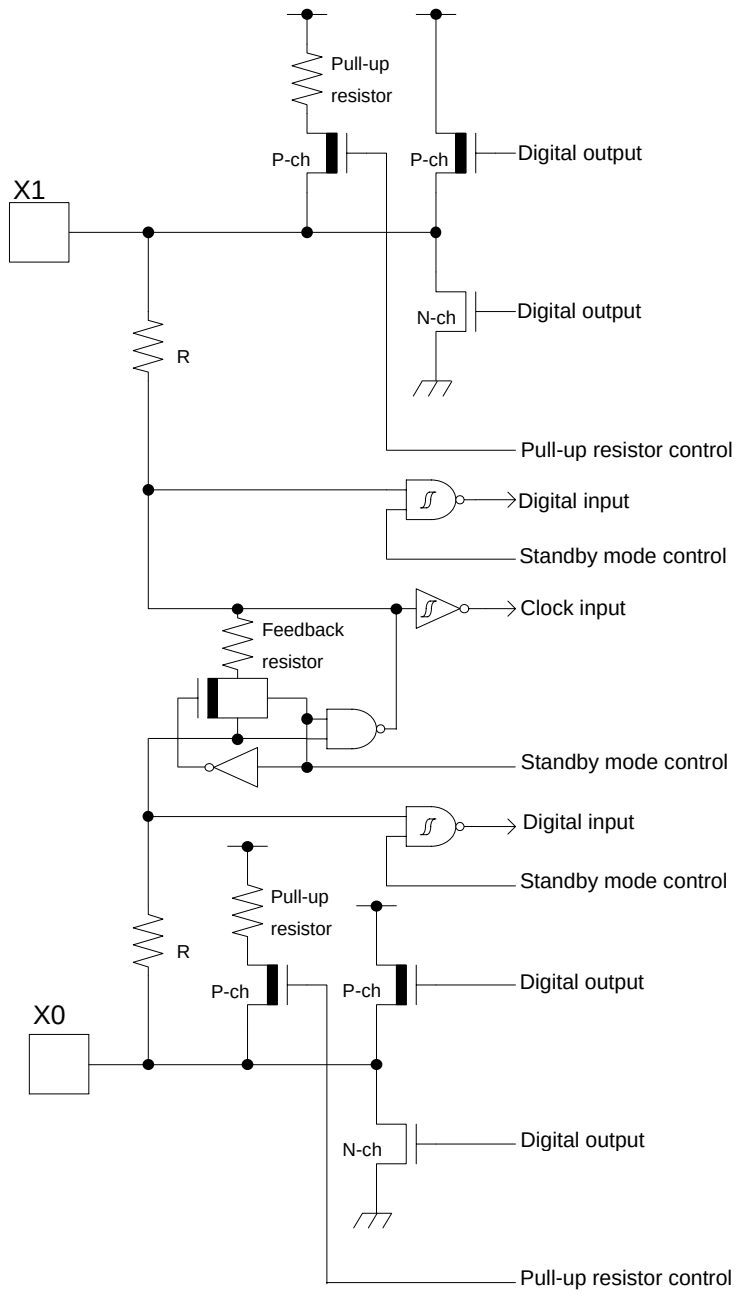	It is possible to select the main oscillation / GPIO function. When the main oscillation is selected. – Oscillation feedback resistor : Approximately 1 MΩ – With standby mode control When the GPIO is selected. – CMOS level output. – CMOS level hysteresis input – With pull-up resistor control – With standby mode control – Pull-up resistor : Approximately 50 kΩ – I_{OH} = -4 mA, I_{OL} = 4 mA

Type	Circuit	Remarks
B	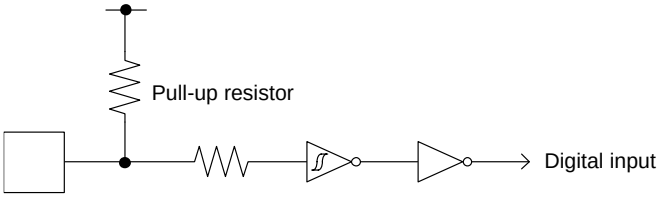	– CMOS level hysteresis input – Pull-up resistor : Approximately 50 kΩ
C	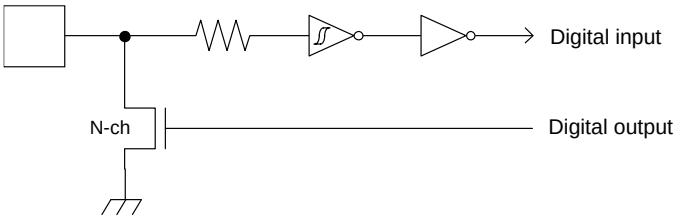	– Open drain output – CMOS level hysteresis input

Type	Circuit	Remarks
D	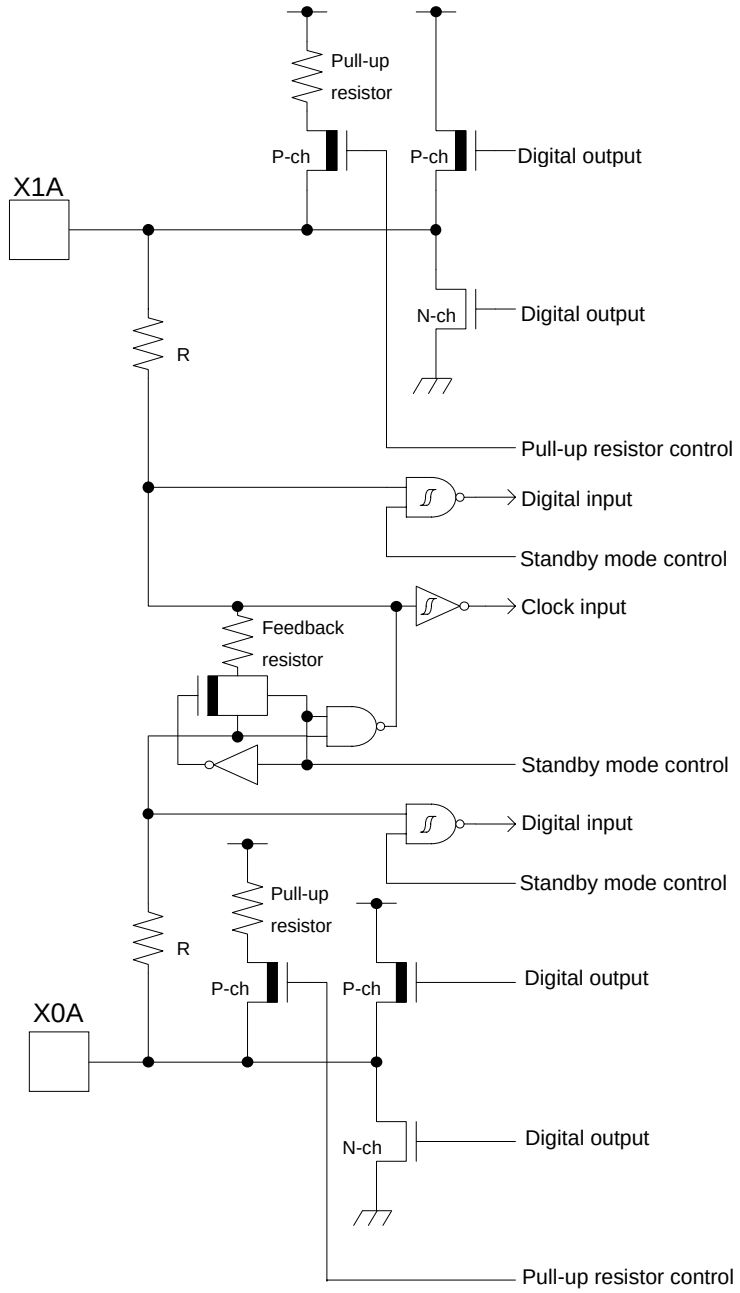	It is possible to select the sub oscillation / GPIO function When the sub oscillation is selected. – Oscillation feedback resistor : Approximately 5 MΩ – With standby mode control When the GPIO is selected. – CMOS level output. – CMOS level hysteresis input – With pull-up resistor control – With standby mode control – Pull-up resistor : Approximately 50 kΩ – I_{OH} = -4 mA, I_{OL} = 4 mA

Type	Circuit	Remarks
E	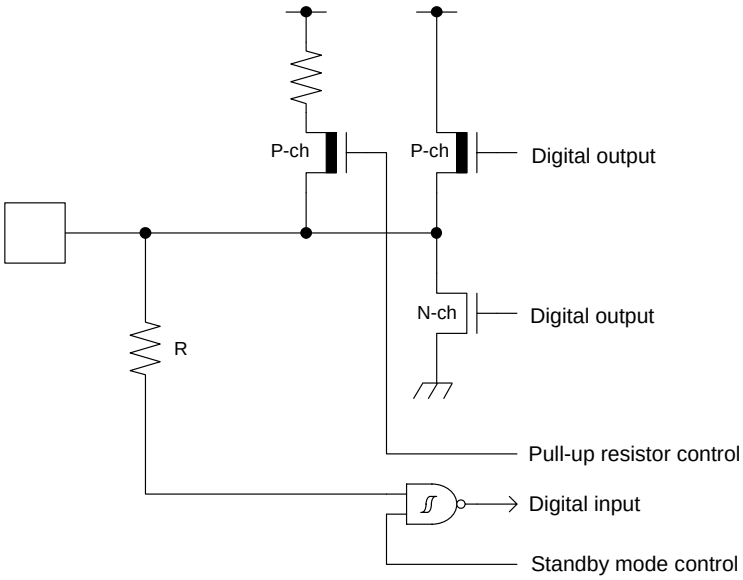	– CMOS level output – CMOS level hysteresis input – With pull-up resistor control – With standby mode control – Pull-up resistor : Approximately 50 kΩ – I_{OH} = -4 mA, I_{OL} = 4 mA When this pin is used as an I2C pin, the digital output P-ch transistor is always off
F	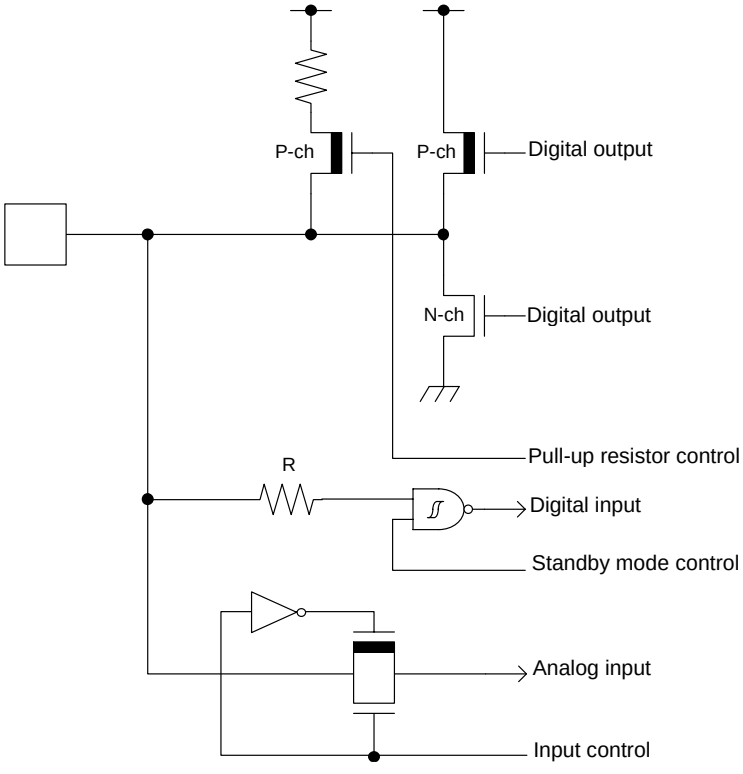	– CMOS level output – CMOS level hysteresis input – With input control – Analog input – With pull-up resistor control – With standby mode control – Pull-up resistor : Approximately 50 kΩ – I_{OH} = -4 mA, I_{OL} = 4 mA When this pin is used as an I2C pin, the digital output P-ch transistor is always off

Type	Circuit	Remarks
G	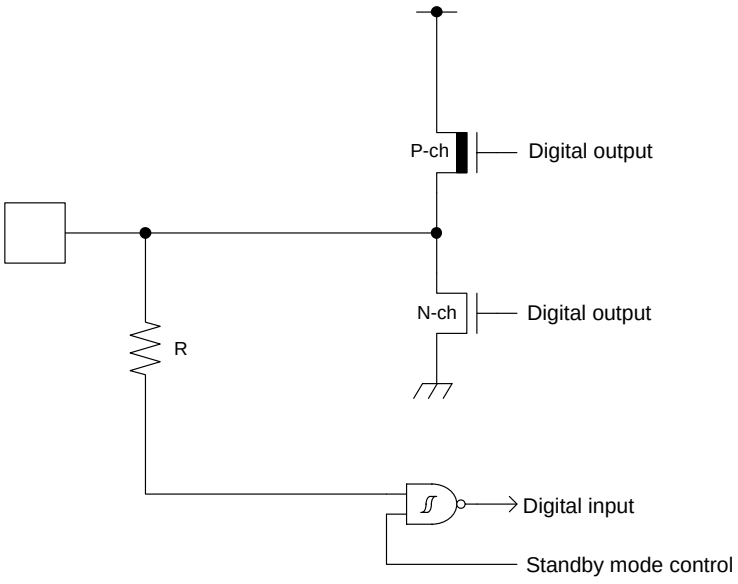	– CMOS level output – CMOS level hysteresis input – With standby mode control – 5 V tolerant input – I_{OH} = -4 mA, I_{OL} = 4 mA – Available to control PZR registers. P0B, P0C, P4C, P60, P81, P82 only. When this pin is used as an I2C pin, the digital output P-ch transistor is always off
H	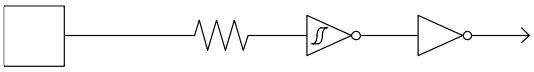	CMOS level hysteresis input
J	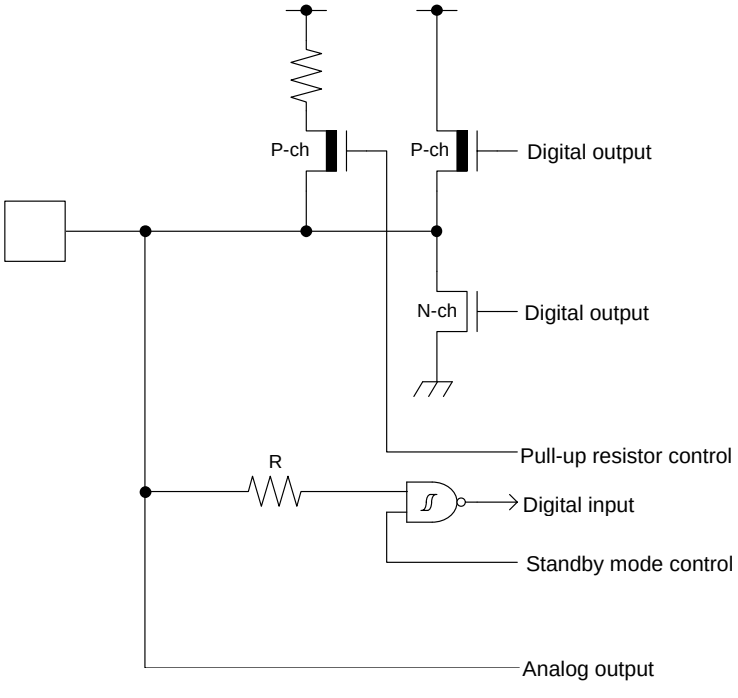	– CMOS level output – CMOS level hysteresis input – With input control – Analog output – With pull-up resistor control – With standby mode control – Pull-up resistor : Approximately 50 kΩ – I_{OH} = -4 mA, I_{OL} = 4 mA When this pin is used as an I2C pin, the digital output P-ch transistor is always off

6. Handling Precautions

Any semiconductor devices have inherently a certain rate of failure. The possibility of failure is greatly affected by the conditions in which they are used (circuit conditions, environmental conditions, etc.). This page describes precautions that must be observed to minimize the chance of failure and to obtain higher reliability from your Cypress semiconductor devices.

6.1 Precautions for Product Design

This section describes precautions when designing electronic equipment using semiconductor devices.

Absolute Maximum Ratings

Semiconductor devices can be permanently damaged by application of stress (voltage, current, temperature, etc.) in excess of certain established limits, called absolute maximum ratings. Do not exceed these ratings.

Recommended Operating Conditions

Recommended operating conditions are normal operating ranges for the semiconductor device. All the device's electrical characteristics are warranted when operated within these ranges.

Always use semiconductor devices within the recommended operating conditions. Operation outside these ranges may adversely affect reliability and could result in device failure.

No warranty is made with respect to uses, operating conditions, or combinations not represented on the data sheet. Users considering application outside the listed conditions are advised to contact their sales representative beforehand.

Processing and Protection of Pins

These precautions must be followed when handling the pins which connect semiconductor devices to power supply and input/output functions.

1. Preventing Over-Voltage and Over-Current Conditions

   Exposure to voltage or current levels in excess of maximum ratings at any pin is likely to cause deterioration within the device, and in extreme cases leads to permanent damage of the device. Try to prevent such overvoltage or over-current conditions at the design stage.

2. Protection of Output Pins

   Shorting of output pins to supply pins or other output pins, or connection to large capacitance can cause large current flows. Such conditions if present for extended periods of time can damage the device.
   Therefore, avoid this type of connection.

3. Handling of Unused Input Pins

   Unconnected input pins with very high impedance levels can adversely affect stability of operation. Such pins should be connected through an appropriate resistance to a power supply pin or ground pin.

Latch-up

Semiconductor devices are constructed by the formation of P-type and N-type areas on a substrate. When subjected to abnormally high voltages, internal parasitic PNPN junctions (called thyristor structures) may be formed, causing large current levels in excess of several hundred mA to flow continuously at the power supply pin. This condition is called latch-up.

CAUTION: The occurrence of latch-up not only causes loss of reliability in the semiconductor device, but can cause injury or damage from high heat, smoke or flame. To prevent this from happening, do the following:

1. Be sure that voltages applied to pins do not exceed the absolute maximum ratings. This should include attention to abnormal noise, surge levels, etc.
2. Be sure that abnormal current flows do not occur during the power-on sequence.

Observance of Safety Regulations and Standards

Most countries in the world have established standards and regulations regarding safety, protection from electromagnetic interference, etc. Customers are requested to observe applicable regulations and standards in the design of products.

Fail-Safe Design

Any semiconductor devices have inherently a certain rate of failure. You must protect against injury, damage or loss from such failures by incorporating safety design measures into your facility and equipment such as redundancy, fire protection, and prevention of over-current levels and other abnormal operating conditions.

Precautions Related to Usage of Devices

Cypress semiconductor devices are intended for use in standard applications (computers, office automation and other office equipment, industrial, communications, and measurement equipment, personal or household devices, etc.).

CAUTION: Customers considering the use of our products in special applications where failure or abnormal operation may directly affect human lives or cause physical injury or property damage, or where extremely high levels of reliability are demanded (such as aerospace systems, atomic energy controls, sea floor repeaters, vehicle operating controls, medical devices for life support, etc.) are requested to consult with sales representatives before such use. The company will not be responsible for damages arising from such use without prior approval.

6.2 Precautions for Package Mounting

Package mounting may be either lead insertion type or surface mount type. In either case, for heat resistance during soldering, you should only mount under Cypress' recommended conditions. For detailed information about mount conditions, contact your sales representative.

Lead Insertion Type

Mounting of lead insertion type packages onto printed circuit boards may be done by two methods: direct soldering on the board, or mounting by using a socket.

Direct mounting onto boards normally involves processes for inserting leads into through-holes on the board and using the flow soldering (wave soldering) method of applying liquid solder. In this case, the soldering process usually causes leads to be subjected to thermal stress in excess of the absolute ratings for storage temperature. Mounting processes should conform to Cypress recommended mounting conditions.

If socket mounting is used, differences in surface treatment of the socket contacts and IC lead surfaces can lead to contact deterioration after long periods. For this reason it is recommended that the surface treatment of socket contacts and IC leads be verified before mounting.

Surface Mount Type

Surface mount packaging has longer and thinner leads than lead-insertion packaging, and therefore leads are more easily deformed or bent. The use of packages with higher pin counts and narrower pin pitch results in increased susceptibility to open connections caused by deformed pins, or shorting due to solder bridges.

You must use appropriate mounting techniques. Cypress recommends the solder reflow method, and has established a ranking of mounting conditions for each product. Users are advised to mount packages in accordance with Cypress ranking of recommended conditions.

Lead-Free Packaging

CAUTION: When ball grid array (BGA) packages with Sn-Ag-Cu balls are mounted using Sn-Pb eutectic soldering, junction strength may be reduced under some conditions of use.

Storage of Semiconductor Devices

Because plastic chip packages are formed from plastic resins, exposure to natural environmental conditions will cause absorption of moisture. During mounting, the application of heat to a package that has absorbed moisture can cause surfaces to peel, reducing moisture resistance and causing packages to crack. To prevent, do the following:

1. Avoid exposure to rapid temperature changes, which cause moisture to condense inside the product. Store products in locations where temperature changes are slight.
2. Use dry boxes for product storage. Products should be stored below 70% relative humidity, and at temperatures between 5°C and 30°C.
   When you open Dry Package that recommends humidity 40% to 70% relative humidity.
3. When necessary, Cypress packages semiconductor devices in highly moisture-resistant aluminum laminate bags, with a silica gel desiccant. Devices should be sealed in their aluminum laminate bags for storage.
4. Avoid storing packages where they are exposed to corrosive gases or high levels of dust.

Baking

Packages that have absorbed moisture may be de-moisturized by baking (heat drying). Follow the Cypress recommended conditions for baking.

Condition: 125°C/24 h

Static Electricity

Because semiconductor devices are particularly susceptible to damage by static electricity, you must take the following precautions:

1. Maintain relative humidity in the working environment between 40% and 70%. Use of an apparatus for ion generation may be needed to remove electricity.
2. Electrically ground all conveyors, solder vessels, soldering irons and peripheral equipment.
3. Eliminate static body electricity by the use of rings or bracelets connected to ground through high resistance (on the level of 1 MΩ).
   Wearing of conductive clothing and shoes, use of conductive floor mats and other measures to minimize shock loads is recommended.
4. Ground all fixtures and instruments, or protect with anti-static measures.
5. Avoid the use of styrofoam or other highly static-prone materials for storage of completed board assemblies.

6.3 Precautions for Use Environment

Reliability of semiconductor devices depends on ambient temperature and other conditions as described above.

For reliable performance, do the following:

Humidity

Prolonged use in high humidity can lead to leakage in devices as well as printed circuit boards. If high humidity levels are anticipated, consider anti-humidity processing.

Discharge of Static Electricity

When high-voltage charges exist close to semiconductor devices, discharges can cause abnormal operation. In such cases, use anti-static measures or processing to prevent discharges.

Corrosive Gases, Dust, or Oil

Exposure to corrosive gases or contact with dust or oil may lead to chemical reactions that will adversely affect the device. If you use devices in such conditions, consider ways to prevent such exposure or to protect the devices.

Radiation, Including Cosmic Radiation

Most devices are not designed for environments involving exposure to radiation or cosmic radiation. Users should provide shielding as appropriate.

Smoke, Flame

CAUTION: Plastic molded devices are flammable, and therefore should not be used near combustible substances. If devices begin to smoke or burn, there is danger of the release of toxic gases.

Customers considering the use of Cypress products in other special environmental conditions should consult with sales representatives.

7. Handling Devices

Power Supply Pins

In products with multiple VCC and VSS pins, respective pins at the same potential are interconnected within the device in order to prevent malfunctions such as latch-up. However, all of these pins should be connected externally to the power supply or ground lines in order to reduce electromagnetic emission levels, to prevent abnormal operation of strobe signals caused by the rise in the ground level, and to conform to the total output current rating.

Moreover, connect the current supply source with each Power supply pin and GND pin of this device at low impedance. It is also advisable that a ceramic capacitor of approximately 0.1 µF be connected as a bypass capacitor between each Power supply pin and GND pin, between AVCC pin and AVSS pin near this device.

Stabilizing power supply voltage

A malfunction may occur when the power supply voltage fluctuates rapidly even though the fluctuation is within the recommended operating conditions of the VCC power supply voltage. As a rule, with voltage stabilization, suppress the voltage fluctuation so that the fluctuation in VCC ripple (peak-to-peak value) at the commercial frequency (50 Hz/60 Hz) does not exceed 10% of the VCC value in the recommended operating conditions, and the transient fluctuation rate does not exceed 0.1 V/µs when there is a momentary fluctuation on switching the power supply.

Crystal Oscillator Circuit

Noise near the X0/X1 and X0A/X1A pins may cause the device to malfunction. Design the printed circuit board so that X0/X1, X0A/X1A pins, the crystal oscillator and the bypass capacitor to ground are located as close to the device as possible.

It is strongly recommended that the PC board artwork be designed such that the X0/X1 and X0A/X1A pins are surrounded by ground plane as this is expected to produce stable operation.

Evaluate oscillation of your using crystal oscillator by your mount board.

Using an External Clock

To use the external clock, set general-purpose I/O ports to input the clock to X0/PE2 and X0A/P46 pin.

- Example of Using an External Clock

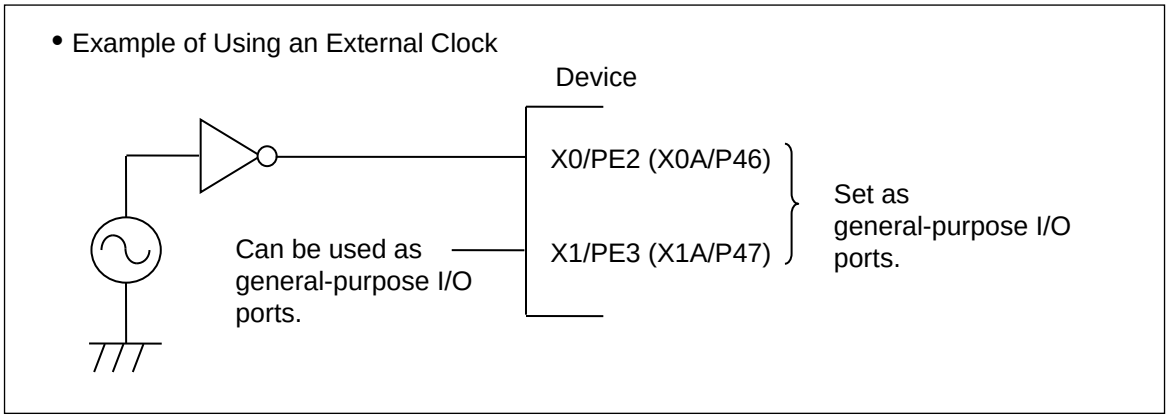

Handling when Using Multi-Function Serial Pin as I²C Pin

If it is using the multi-function serial pin as I²C pins, P-ch transistor of digital output is always disabled.
However, I²C pins need to keep the electrical characteristic like other pins and not to connect to the external I²C bus system with power OFF.

C Pin

This series contains the regulator. Be sure to connect a smoothing capacitor (C_S) for the regulator between the C pin and the GND pin. Please use a ceramic capacitor or a capacitor of equivalent frequency characteristics as a smoothing capacitor.
However, some laminated ceramic capacitors have the characteristics of capacitance variation due to thermal fluctuation (F characteristics and Y5V characteristics). Please select the capacitor that meets the specifications in the operating conditions to use by evaluating the temperature characteristics of a capacitor.
A smoothing capacitor of about 4.7 µF would be recommended for this series.

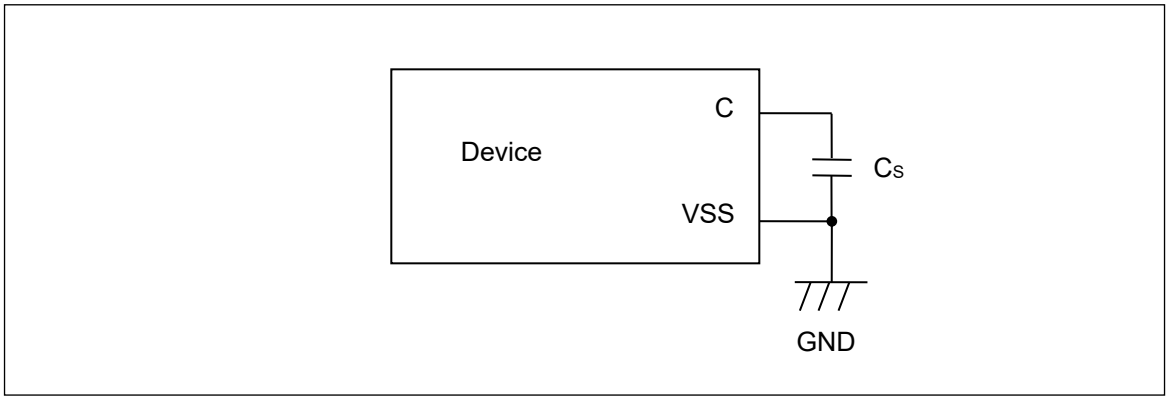

Mode pins (MD0, MD1)

Connect the MD pin (MD0, MD1) directly to VCC or VSS pins. Design the printed circuit board such that the pull-up/down resistance stays low, as well as the distance between the mode pins and VCC pins or VSS pins is as short as possible and the connection impedance is low, when the pins are pulled-up/down such as for switching the pin level and rewriting the Flash memory data. It is because of preventing the device erroneously switching to test mode due to noise.

Notes on Power-on

Turn power on/off in the following order or at the same time.
If not using the A/D converter, connect AVCC = VCC and AVSS = VSS.

Turning on : VCC → AVCC → AVRH

Turning off : AVRH → AVCC → VCC

Serial Communication

There is a possibility to receive wrong data due to the noise or other causes on the serial communication.
Therefore, design a printed circuit board so as to avoid noise.

Consider the case of receiving wrong data due to noise, perform error detection such as by applying a checksum of data at the end. If an error is detected, retransmit the data.

Differences in Features among the Products with Different Memory Sizes and between Flash Products and MASK Products

The electric characteristics including power consumption, ESD, latch-up, noise characteristics, and oscillation characteristics among the products with different memory sizes and between Flash products and MASK products are different because chip layout and memory structures are different.

If you are switching to use a different product of the same series, please make sure to evaluate the electric characteristics.

8. Block Diagram

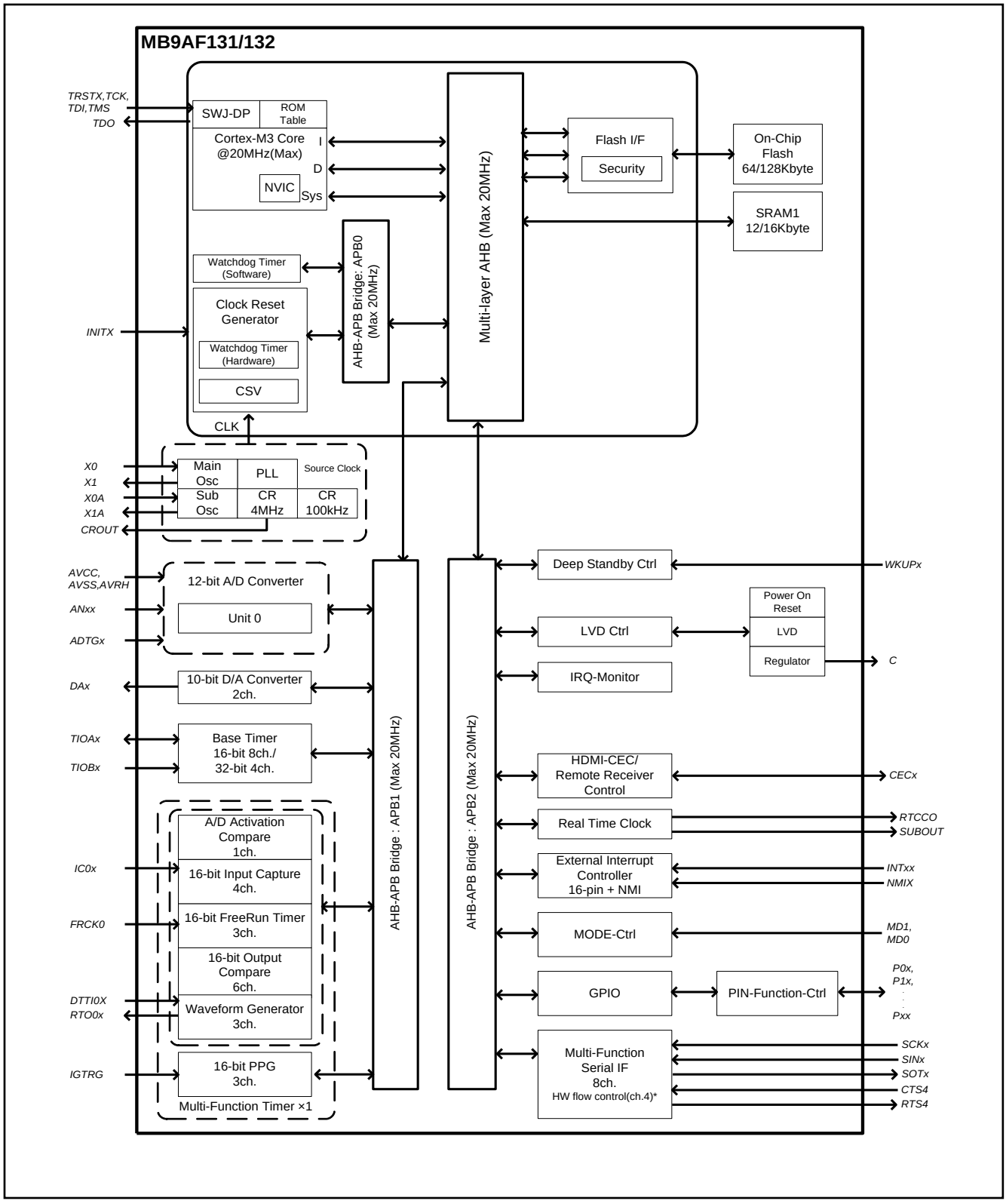

9. Memory Size

See Memory size in product Lineup to confirm the memory size.

9.1 Memory Map

Memory Map (1)

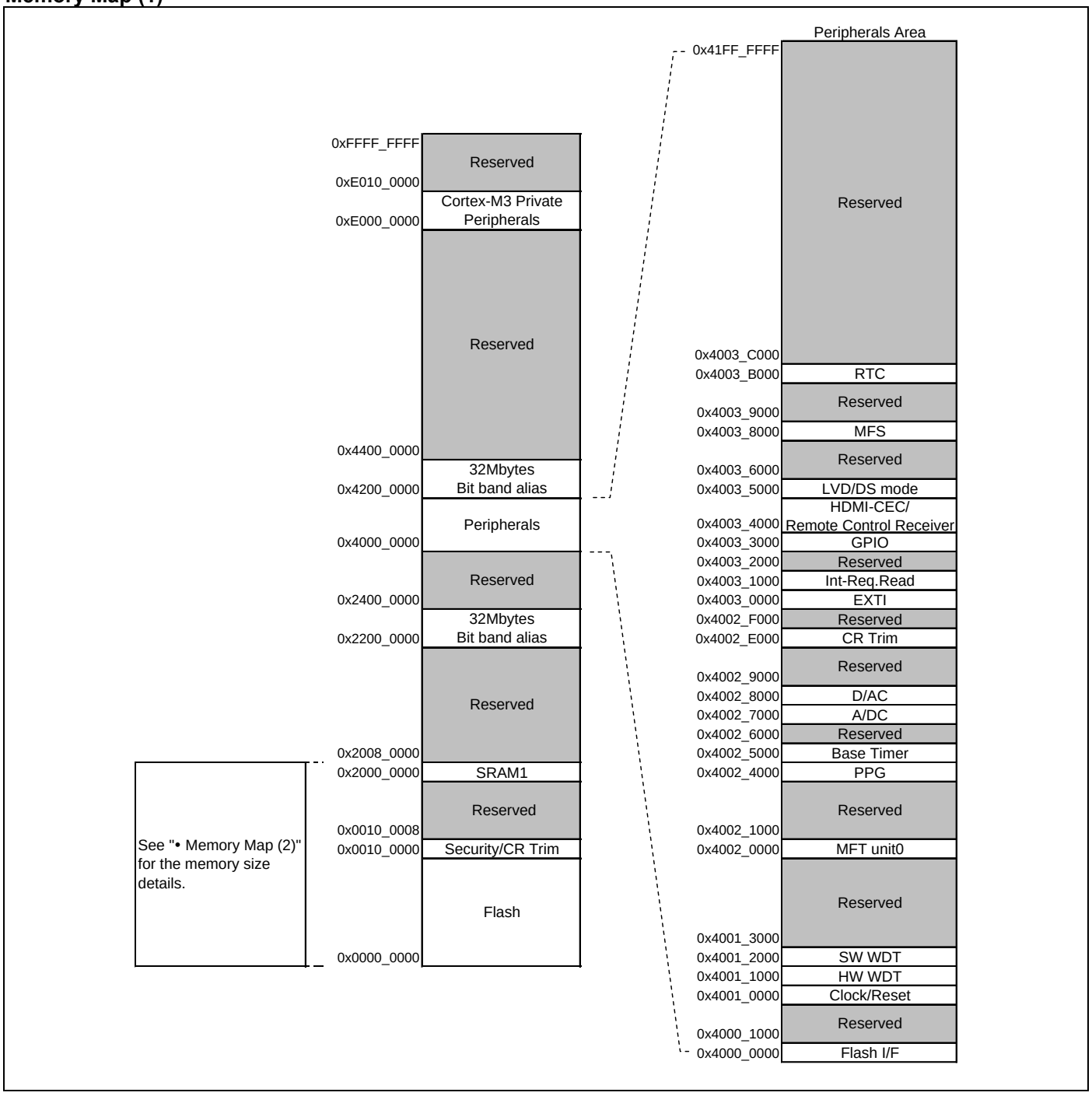

Memory Map (2)

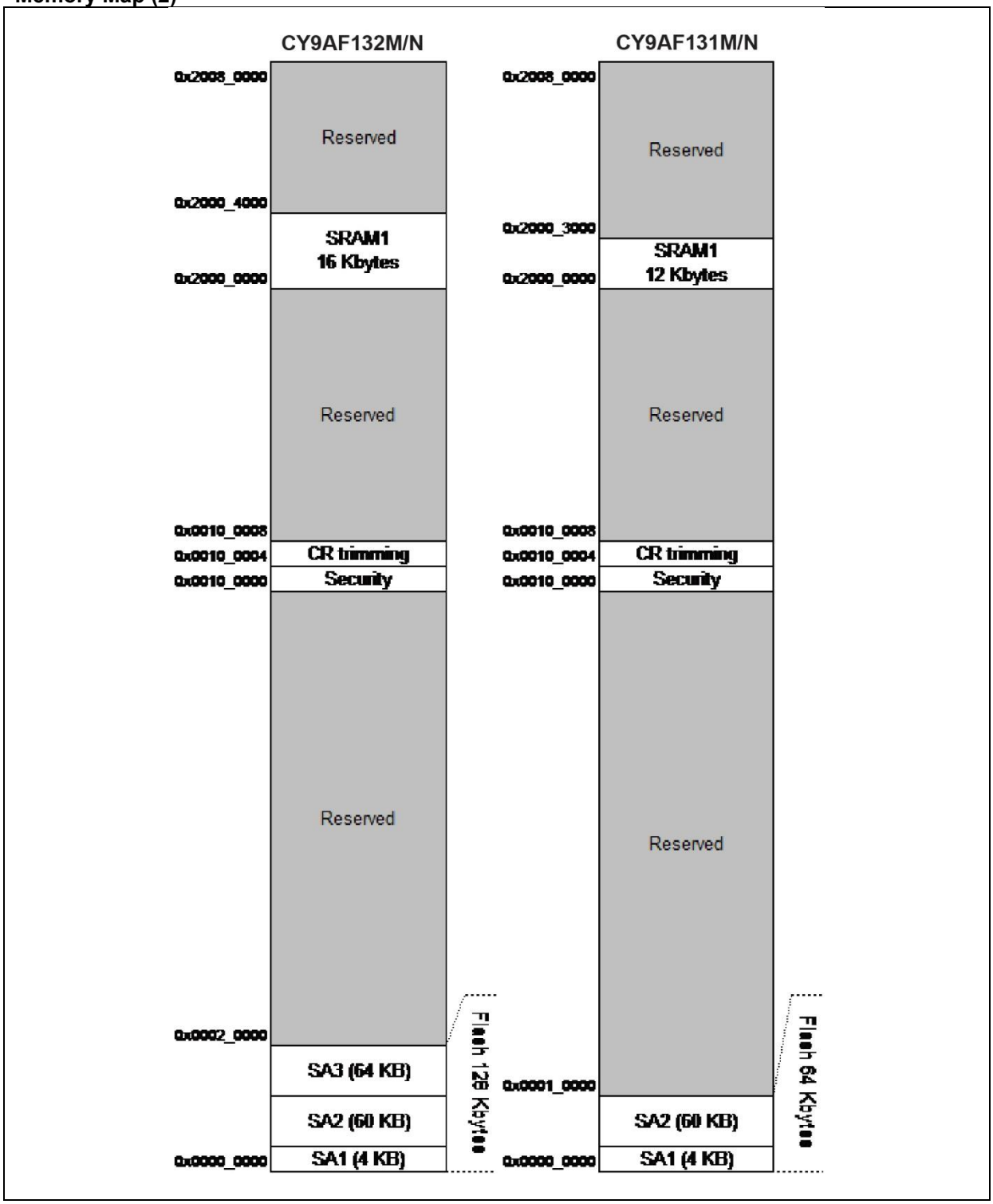

See CY9AAA0N/1A0N/A30N/130N/130L Series Flash Programming Manual to confirm the detail of Flash memory.

Peripheral Address Map

Start address	End address	Bus	Peripherals
0x4000_0000	0x4000_0FFF	AHB	Flash memory I/F register
0x4000_1000	0x4000_FFFF		Reserved
0x4001_0000	0x4001_0FFF	APB0	Clock/Reset Control
0x4001_1000	0x4001_1FFF		Hardware Watchdog timer
0x4001_2000	0x4001_2FFF		Software Watchdog timer
0x4001_3000	0x4001_4FFF		Reserved
0x4001_5000	0x4001_5FFF		Reserved
0x4001_6000	0x4001_FFFF		Reserved
0x4002_0000	0x4002_0FFF	APB1	Multi-function timer unit0
0x4002_1000	0x4002_1FFF		Reserved
0x4002_2000	0x4002_3FFF		Reserved
0x4002_4000	0x4002_4FFF		PPG
0x4002_5000	0x4002_5FFF		Base Timer
0x4002_6000	0x4002_6FFF		Reserved
0x4002_7000	0x4002_7FFF		A/D Converter
0x4002_8000	0x4002_8FFF		D/A Converter
0x4002_9000	0x4002_DFFF		Reserved
0x4002_E000	0x4002_EFFF		Built-in CR trimming
0x4002_F000	0x4002_FFFF		Reserved
0x4003_0000	0x4003_0FFF	APB2	External Interrupt
0x4003_1000	0x4003_1FFF		Interrupt Source Check Register
0x4003_2000	0x4003_2FFF		Reserved
0x4003_3000	0x4003_3FFF		GPIO
0x4003_4000	0x4003_4FFF		HDMI-CEC/ Remote Control Receiver
0x4003_5000	0x4003_50FF		Low-Voltage Detector
0x4003_5100	0x4003_5FFF		Deep standby mode Controller
0x4003_6000	0x4003_6FFF		Reserved
0x4003_7000	0x4003_7FFF		Reserved
0x4003_8000	0x4003_8FFF		Multi-function serial
0x4003_9000	0x4003_9FFF		Reserved
0x4003_A000	0x4003_AFFF		Reserved
0x4003_B000	0x4003_BFFF		Real-time clock
0x4003_C000	0x4003_FFFF		Reserved

Start address	End address	Bus	Peripherals
0x4004_0000	0x4004_FFFF	AHB	Reserved
0x4005_0000	0x4005_FFFF		Reserved
0x4006_0000	0x4006_0FFF		Reserved
0x4006_1000	0x4006_1FFF		Reserved
0x4006_2000	0x4006_2FFF		Reserved
0x4006_3000	0x4006_3FFF		Reserved
0x4006_4000	0x41FF_FFFF		Reserved

10. Pin Status in Each CPU State

The terms used for pin status have the following meanings.

- INITX=0
  This is the period when the INITX pin is the L level.
- INITX=1
  This is the period when the INITX pin is the H level.
- SPL=0
  This is the status that the standby pin level setting bit (SPL) in the standby mode control register (STB_CTL) is set to 0.
- SPL=1
  This is the status that the standby pin level setting bit (SPL) in the standby mode control register (STB_CTL) is set to 1.
- Input enabled
  Indicates that the input function can be used.
- Internal input fixed at 0
  This is the status that the input function cannot be used. Internal input is fixed at L.
- Hi-Z
  Indicates that the pin drive transistor is disabled and the pin is put in the Hi-Z state.
- Setting disabled
  Indicates that the setting is disabled.
- Maintain previous state
  Maintains the state that was immediately prior to entering the current mode.
  If a built-in peripheral function is operating, the output follows the peripheral function.
  If the pin is being used as a port, that output is maintained.
- Analog input is enabled
  Indicates that the analog input is enabled.
- Trace output
  Indicates that the trace function can be used.
- GPIO selected
  In Deep standby mode, pins switch to the general-purpose I/O port.

List of Pin Status

Pin status type	Function group	Power-on reset or low-voltage detection state	INITX input state	Device internal reset state	Run mode or Sleep mode state	Timer mode, RTC mode, or Stop mode state		Deep standby RTC mode or Deep Standby Stop mode state		Return from Deep Standby mode state
		Power supply unstable	Power supply stable		Power supply stable	Power supply stable		Power supply stable		Power supply stable
		-	INITX = 0	INITX = 1	INITX = 1	INITX = 1		INITX = 1		INITX = 1
		-	-	-	-	SPL = 0	SPL = 1	SPL = 0	SPL = 1	-
A	Main crystal oscillator input pin	Input enabled	Input enabled	Input enabled	Input enabled	Input enabled	Input enabled	Input enabled	Input enabled	Input enabled
	External main clock input selected	Setting disabled	Setting disabled	Setting disabled	Maintain previous state	Maintain previous state / When oscillation stops*1, output maintains previous state / Internal input fixed at 0	Hi-Z / Input enabled / When oscillation stops*1, Hi-Z / Internal input fixed at 0	Output maintains previous state / Internal input fixed at 0	Hi-Z / Internal input fixed at "0"	GPIO selected
	GPIO selected	Setting disabled	Setting disabled	Setting disabled	Maintain previous state	Output maintains previous state / Internal input fixed at 0	Hi-Z / Internal input fixed at 0	Output maintains previous state / Internal input fixed at 0	Hi-Z / Internal input fixed at 0	Maintain previous state
B	Main crystal oscillator output pin	Hi-Z / Internal input fixed at 0	Hi-Z / Internal input fixed at 0	Hi-Z / Internal input fixed at 0	Maintain previous state / When oscillation stops*1, Hi-Z output / Internal input fixed at 0	Maintain previous state / When oscillation stops*1, Hi-Z output / Internal input fixed at 0	Maintain previous state / When oscillation stops*1, Hi-Z output / Internal input fixed at 0	Maintain previous state / When oscillation stops*1, Hi-Z output / Internal input fixed at 0	Maintain previous state / When oscillation stops*1, Hi-Z output / Internal input fixed at 0	Maintain previous state / When oscillation stops*1, Hi-Z output / Internal input fixed at 0
	GPIO selected	Setting disabled	Setting disabled	Setting disabled	Maintain previous state	Maintain previous state	Hi-Z / Internal input fixed at 0	Output maintains previous state / Internal input fixed at 0	Hi-Z / Internal input fixed at 0	Maintain previous state
C	INITX input pin	Pull-up / Input enabled	Pull-up / Input enabled	Pull-up / Input enabled	Pull-up / Input enabled	Pull-up / Input enabled	Pull-up / Input enabled	Pull-up / Input enabled	Pull-up / Input enabled	Pull-up / Input enabled
D	Mode input pin	Input enabled	Input enabled	Input enabled	Input enabled	Input enabled	Input enabled	Input enabled	Input enabled	Input enabled
E	JTAG selected	Hi-Z	Pull-up / Input enabled	Pull-up / Input enabled	Maintain previous state	Maintain previous state	Maintain previous state	Maintain previous state	Maintain previous state	Maintain previous state
	GPIO selected	Setting disabled	Setting disabled	Setting disabled			Hi-Z / Internal input fixed at 0		Hi-Z / Internal input fixed at 0	

Pin status type	Function group	Power-on reset or low-voltage detection state	INITX input state	Device internal reset state	Run mode or Sleep mode state	Timer mode, RTC mode, or Stop mode state		Deep standby RTC mode or Deep Standby Stop mode state		Return from Deep Standby mode state
		Power supply unstable	Power supply stable		Power supply stable	Power supply stable		Power supply stable		Power supply stable
		-	INITX = 0	INITX = 1	INITX = 1	INITX = 1		INITX = 1		INITX = 1
		-	-	-	-	SPL = 0	SPL = 1	SPL = 0	SPL = 1	-
F	External interrupt enabled selected	Setting disabled	Setting disabled	Setting disabled	Maintain previous state	Maintain previous state	Maintain previous state	GPIO selected Internal input fixed at 0	Hi-Z / Internal input fixed at 0	GPIO selected
	Resource other than above selected	Hi-Z	Hi-Z / Input enabled	Hi-Z / Input enabled			Hi-Z / Internal input fixed at 0			
	GPIO selected							Output maintains previous state / Internal input fixed at 0		Maintain previous state
G	WKUP enabled	Setting disabled	Setting disabled	Setting disabled	Maintain previous state	Maintain previous state	Hi-Z / Internal input fixed at 0	WKUP input enabled	Hi-Z / WKUP input enabled	GPIO selected
	External interrupt enabled selected	Setting disabled	Setting disabled	Setting disabled			Maintain previous state	GPIO selected Internal input fixed at 0	Hi-Z / Internal input fixed at 0	
	Resource other than above selected	Hi-Z	Hi-Z / Input enabled	Hi-Z / Input enabled			Hi-Z / Internal input fixed at 0			
	GPIO selected							Output maintains previous state / Internal input fixed at 0		Maintain previous state
H	Resource selected	Hi-Z	Hi-Z / Input enabled	Hi-Z / Input enabled	Maintain previous state	Maintain previous state	Hi-Z / Internal input fixed at 0	GPIO selected Internal input fixed at 0	Hi-Z / Internal input fixed at 0	GPIO selected
	GPIO selected							Output maintains previous state / Internal input fixed at 0		Maintain previous state
I	NMIX selected	Setting disabled	Setting disabled	Setting disabled	Maintain previous state	Maintain previous state	Maintain previous state	WKUP input enabled	Hi-Z / WKUP input enabled	GPIO selected
	Resource other than above selected	Hi-Z	Hi-Z / Input enabled	Hi-Z / Input enabled			Hi-Z / Internal input fixed at 0			
	GPIO selected									Maintain previous state

Pin status type	Function group	Power-on reset or low-voltage detection state	INITX input state	Device internal reset state	Run mode or Sleep mode state	Timer mode, RTC mode, or Stop mode state		Deep standby RTC mode or Deep Standby Stop mode state		Return from Deep Standby mode state
		Power supply unstable	Power supply stable		Power supply stable	Power supply stable		Power supply stable		Power supply stable
		-	INITX = 0	INITX = 1	INITX = 1	INITX = 1		INITX = 1		INITX = 1
		-	-	-	-	SPL = 0	SPL = 1	SPL = 0	SPL = 1	-
J	Analog input selected	Hi-Z	Hi-Z / Internal input fixed at 0 / Analog input enabled	Hi-Z / Internal input fixed at 0 / Analog input enabled	Hi-Z / Internal input fixed at 0 / Analog input enabled	Hi-Z / Internal input fixed at 0 / Analog input enabled	Hi-Z / Internal input fixed at 0 / Analog input enabled	Hi-Z / Internal input fixed at 0 / Analog input enabled	Hi-Z / Internal input fixed at 0 / Analog input enabled	Hi-Z / Internal input fixed at 0 / Analog input enabled
	Resource other than above selected	Setting disabled	Setting disabled	Setting disabled	Maintain previous state	Maintain previous state	Hi-Z / Internal input fixed at 0	GPIO selected Internal input fixed at 0	Hi-Z / Internal input fixed at 0	GPIO selected
	GPIO selected							Output maintains previous state / Internal input fixed at 0		Maintain previous state
K	Analog input selected	Hi-Z	Hi-Z / Internal input fixed at 0 / Analog input enabled	Hi-Z / Internal input fixed at 0 / Analog input enabled	Hi-Z / Internal input fixed at 0 / Analog input enabled	Hi-Z / Internal input fixed at 0 / Analog input enabled	Hi-Z / Internal input fixed at 0 / Analog input enabled	Hi-Z / Internal input fixed at "0" / Analog input enabled	Hi-Z / Internal input fixed at "0" / Analog input enabled	Hi-Z / Internal input fixed at "0" / Analog input enabled
	External interrupt enabled selected	Setting disabled	Setting disabled	Setting disabled	Maintain previous state	Maintain previous state	Maintain previous state	GPIO selected Internal input fixed at 0	Hi-Z / Internal input fixed at 0	GPIO selected
	Resource other than above selected						Hi-Z / Internal input fixed at 0			
	GPIO selected							Output maintains previous state / Internal input fixed at 0		Maintain previous state

Pin status type	Function group	Power-on reset or low-voltage detection state	INITX input state	Device internal reset state	Run mode or Sleep mode state	Timer mode, RTC mode, or Stop mode state		Deep standby RTC mode or Deep Standby Stop mode state		Return from Deep Standby mode state
		Power supply unstable	Power supply stable		Power supply stable	Power supply stable		Power supply stable		Power supply stable
		-	INITX = 0	INITX = 1	INITX = 1	INITX = 1		INITX = 1		INITX = 1
		-	-	-	-	SPL = 0	SPL = 1	SPL = 0	SPL = 1	-
L	Analog input selected	Hi-Z	Hi-Z / Internal input fixed at 0 / Analog input enabled	Hi-Z / Internal input fixed at 0 / Analog input enabled	Hi-Z / Internal input fixed at 0 / Analog input enabled	Hi-Z / Internal input fixed at 0 / Analog input enabled	Hi-Z / Internal input fixed at 0 / Analog input enabled	Hi-Z / Internal input fixed at 0 / Analog input enabled	Hi-Z / Internal input fixed at 0 / Analog input enabled	Hi-Z / Internal input fixed at 0 / Analog input enabled
	WKUP enabled	Setting disabled	Setting disabled	Setting disabled	Maintain previous state	Maintain previous state	Hi-Z / Internal input fixed at 0	WKUP input enabled	Hi-Z / WKUP input enabled	GPIO selected
	External interrupt enabled selected						Maintain previous state	GPIO selected Internal input fixed at 0	Hi-Z / Internal input fixed at 0	
	Resource other than above selected						Hi-Z / Internal input fixed at 0			
	GPIO selected							Output maintains previous state / Internal input fixed at 0		Maintain previous state
M	Sub crystal oscillator input pin	Input enabled	Input enabled	Input enabled	Input enabled	Input enabled	Input enabled	Input enabled	Input enabled	Input enabled
	External sub clock input selected	Setting disabled	Setting disabled	Setting disabled	Maintain previous state	Maintain previous state / When oscillation stops*2, output maintains previous state / Internal input fixed at 0	Hi-Z / Input enabled / When oscillation stops*2, Hi-Z / Internal input fixed at 0	Maintain previous state / When oscillation stops*2, output maintains previous state / Internal input fixed at 0	Hi-Z / Input enabled / When oscillation stops*2, Hi-Z / Internal input fixed at 0	Maintain previous state / When Return from Deep Standby STOP mode, GPIO is selected
	GPIO selected	Setting disabled	Setting disabled	Setting disabled	Maintain previous state	Output maintains previous state / Internal input fixed at 0	Hi-Z / Internal input fixed at 0	Output maintains previous state / Internal input fixed at 0	Hi-Z / Internal input fixed at 0	Maintain previous state

Pin status type	Function group	Power-on reset or low-voltage detection state	INITX input state	Device internal reset state	Run mode or Sleep mode state	Timer mode, RTC mode, or Stop mode state		Deep standby RTC mode or Deep Standby Stop mode state		Return from Deep Standby mode state
		Power supply unstable	Power supply stable		Power supply stable	Power supply stable		Power supply stable		Power supply stable
		-	INITX = 0	INITX = 1	INITX = 1	INITX = 1		INITX = 1		INITX = 1
		-	-	-	-	SPL = 0	SPL = 1	SPL = 0	SPL = 1	-
N	Sub crystal oscillator output pin	Hi-Z / Internal input fixed at 0	Hi-Z / Internal input fixed at 0	Hi-Z / Internal input fixed at 0	Maintain previous state	Maintain previous state / When oscillation stops*2, Hi-Z / Internal input fixed at 0	Maintain previous state / When oscillation stops*2, Hi-Z / Internal input fixed at 0	Maintain previous state / When oscillation stops*2, Hi-Z / Internal input fixed at 0	Maintain previous state / When oscillation stops*2, Hi-Z / Internal input fixed at 0	Maintain previous state / When oscillation stops*2, Hi-Z / Internal input fixed at 0
	GPIO selected	Setting disabled	Setting disabled	Setting disabled	Maintain previous state	Maintain previous state	Hi-Z / Internal input fixed at 0	Output maintains previous state / Internal input fixed at 0	Hi-Z / Internal input fixed at 0	Maintain previous state
O	External interrupt enabled selected	Setting disabled	Setting disabled	Setting disabled	Maintain previous state	Maintain previous state	Maintain previous state	GPIO selected / Internal input fixed at 0	Hi-Z / Internal input fixed at 0	GPIO selected
	GPIO selected	Hi-Z	Hi-Z / Input enabled	Hi-Z / Input enabled			Hi-Z / Internal input fixed at 0	Output maintains previous state / Internal input fixed at 0		Maintain previous state
P	Mode input pin	Input enabled	Input enabled	Input enabled	Input enabled	Input enabled	Input enabled	Input enabled	Input enabled	Input enabled
	GPIO selected	Setting disabled	Setting disabled	Setting disabled	Maintain previous state	Maintain previous state	Hi-Z / input enabled	Maintain previous state	Hi-Z / input enabled	Maintain previous state
Q	CEC enabled	Setting disabled	Setting disabled	Setting disabled	Maintain previous state	Maintain previous state	Maintain previous state	Maintain previous state	Maintain previous state	Maintain previous state
	Resource other than above selected	Hi-Z	Hi-Z / Input enabled	Hi-Z / Input enabled	Maintain previous state	Maintain previous state	Hi-Z / Internal input fixed at 0	GPIO selected Internal input fixed at 0	Hi-Z / Internal input fixed at 0	GPIO selected
	GPIO selected							Output maintains previous state / Internal input fixed at 0		Maintain previous state

Pin status type	Function group	Power-on reset or low-voltage detection state	INITX input state	Device internal reset state	Run mode or Sleep mode state	Timer mode, RTC mode, or Stop mode state		Deep standby RTC mode or Deep Standby Stop mode state		Return from Deep Standby mode state
		Power supply unstable	Power supply stable		Power supply stable	Power supply stable		Power supply stable		Power supply stable
		-	INITX = 0	INITX = 1	INITX = 1	INITX = 1		INITX = 1		INITX = 1
		-	-	-	-	SPL = 0	SPL = 1	SPL = 0	SPL = 1	-
R	CEC enabled	Setting disabled	Setting disabled	Setting disabled	Maintain previous state	Maintain previous state	Maintain previous state	Maintain previous state	Maintain previous state	Maintain previous state
	WKUP enabled	Setting disabled	Setting disabled	Setting disabled	Maintain previous state	Maintain previous state	Hi-Z / Internal input fixed at 0	WKUP input enabled	Hi-Z / WKUP input enabled	GPIO selected
	External interrupt enabled selected						Maintain previous state	GPIO selected Internal input fixed at 0	Hi-Z / Internal input fixed at 0	
	Resource other than above selected	Hi-Z	Hi-Z / Input enabled	Hi-Z / Input enabled			Hi-Z / Internal input fixed at 0			
	GPIO selected							Output maintains previous state / Internal input fixed at 0		Maintain previous state
S	Analog output selected	Setting disabled	Setting disabled	Setting disabled	Maintain previous state	*3	*4	GPIO selected Internal input fixed at 0	Hi-Z / Internal input fixed at 0	GPIO selected
	External interrupt enabled selected	Setting disabled	Setting disabled	Setting disabled		Maintain previous state	Maintain previous state			
	Resource other than above selected	Hi-Z	Hi-Z / Input enabled	Hi-Z / Input enabled			Hi-Z / Internal input fixed at 0			
	GPIO selected							Output maintains previous state / Internal input fixed at 0		Maintain previous state
T	Analog output selected	Setting disabled	Setting disabled	Setting disabled	Maintain previous state	*3	*4	GPIO selected Internal input fixed at 0	Hi-Z / Internal input fixed at 0	GPIO selected
	Resource other than above selected	Hi-Z	Hi-Z / Input enabled	Hi-Z / Input enabled		Maintain previous state	Hi-Z / Internal input fixed at 0			
	GPIO selected							Output maintains previous state / Internal input fixed at 0		Maintain previous state

*1: Oscillation is stopped at Sub Run mode, Low-speed CR Run mode, Sub Sleep mode, Low-speed CR Sleep mode, Sub Timer mode, Low-speed CR Timer mode, RTC mode, Stop mode, Deep Standby RTC mode, and Deep Standby Stop mode.

*2: Oscillation is stopped at Stop mode and Deep Standby Stop mode.

*3: Maintain previous state at Timer mode. GPIO selected Internal input fixed at 0 at RTC mode, Stop mode.

*4: Maintain previous state at Timer mode. Hi-Z/Internal input fixed at 0 at RTC mode, Stop mode.

11. Electrical Characteristics

11.1 Absolute Maximum Ratings

Parameter	Symbol	Rating		Unit	Remarks
		Min	Max		
Power supply voltage*1,*2	V_{CC}	V_{SS} - 0.5	V_{SS} + 6.5	V	
Analog power supply voltage*1,*3	AV_{CC}	V_{SS} - 0.5	V_{SS} + 6.5	V	
Analog reference voltage*1,*3	AVRH	V_{SS} - 0.5	V_{SS} + 6.5	V	
Input voltage*1	V_I	V_{SS} - 0.5	V_{CC} + 0.5 (≤ 6.5 V)	V	
		V_{SS} - 0.5	V_{SS} + 6.5	V	5 V tolerant
Analog pin input voltage*1	V_{IA}	V_{SS} - 0.5	AV_{CC} + 0.5 (≤ 6.5 V)	V	
Output voltage*1	V_O	V_{SS} - 0.5	V_{CC} + 0.5 (≤ 6.5 V)	V	
L level maximum output current*4	I_{OL}	-	10	mA	
L level average output current*5	I_{OLAV}	-	4	mA	
L level total maximum output current	$\sum I_{OL}$	-	100	mA	
L level total average output current*6	$\sum I_{OLAV}$	-	50	mA	
H level maximum output current*4	I_{OH}	-	- 10	mA	
H level average output current*5	I_{OHAV}	-	- 4	mA	
H level total maximum output current	$\sum I_{OH}$	-	- 100	mA	
H level total average output current*6	$\sum I_{OHAV}$	-	- 50	mA	
Power consumption	P_D	-	400	mW	
Storage temperature	T_{STG}	- 55	+ 150	°C	

*1: These parameters are based on the condition that $V_{SS} = AV_{SS} = 0$ V.

*2: V_{CC} must not drop below V_{SS} - 0.5 V.

*3: Be careful not to exceed V_{CC} + 0.5 V, for example, when the power is turned on.

*4: The maximum output current is defined as the value of the peak current flowing through any one of the corresponding pins.

*5: The average output current is defined as the average current value flowing through any one of the corresponding pins for a 100 ms period.

*6: The total average output current is defined as the average current value flowing through all of corresponding pins for a 100 ms.

WARNING:

− *Semiconductor devices may be permanently damaged by application of stress (including, without limitation, voltage, current or temperature) in excess of absolute maximum ratings. Do not exceed any of these ratings.*

11.2 Recommended Operating Conditions

Parameter		Symbol	Conditions	Value		Unit	Remarks
				Min	Max		
Power supply voltage		V_{CC}	-	1.8	5.5	V	
Analog power supply voltage		AV_{CC}	-	1.8	5.5	V	$AV_{CC} = V_{CC}$
Analog reference voltage		AVRH	-	2.7	AV_{CC}	V	$AV_{CC} \geq 2.7$ V
				AV_{CC}			$AV_{CC} < 2.7$ V
Smoothing capacitor		C_S	-	1	10	µF	For built-in Regulator *
Operating Temperature	LQH080, LQJ080, LQI100, PQH100	T_A	-	- 40	+ 85	°C	

*: See “C Pin” in “Handling Devices” for the smoothing capacitor.

WARNING:

- *The recommended operating conditions are required in order to ensure the normal operation of the semiconductor device. All of the device's electrical characteristics are warranted when the device is operated under these conditions.*
  Any use of semiconductor devices will be under their recommended operating condition.
  Operation under any conditions other than these conditions may adversely affect reliability of device and could result in device failure.
  No warranty is made with respect to any use, operating conditions or combinations not represented on this data sheet. If you are considering application under any conditions other than listed herein, please contact sales representatives beforehand.

11.3 DC Characteristics

11.3.1 Current Rating

(V_{CC} = AV_{CC} = 1.8V to 5.5V, V_{SS} = AV_{SS} = 0V, T_A = - 40°C to + 85°C)

Parameter	Symbol	Pin name	Conditions		Value		Unit	Remarks
					Typ*3	Max*4		
Power supply current	I_{CC}	VCC	PLL Run mode	CPU: 20 MHz, Peripheral: 20 MHz, Flash memory 0 Wait, FRWTR.RWT = 00, FSYNDN.SD = 000	19	24	mA	*1, *5
				CPU: 20 MHz, Peripheral: clock stopped, NOP operation	9.5	12.5	mA	*1, *5
			High-speed CR Run mode	CPU/Peripheral: 4 MHz*2 Flash memory 0 Wait FRWTR.RWT = 00 FSYNDN.SD = 000	4.5	5.5	mA	*1
			Sub Run mode	CPU/Peripheral: 32 kHz, Flash memory 0 Wait, FRWTR.RWT = 00, FSYNDN.SD = 000	0.25	0.55	mA	*1, *6
			Low-speed CR Run mode	CPU/Peripheral: 100 kHz, Flash memory 0 Wait, FRWTR.RWT = 00, FSYNDN.SD = 000	0.3	0.95	mA	*1
	I_{CCS}		PLL Sleep mode	Peripheral: 20 MHz	8	10.5	mA	*1, *5
			High-speed CR Sleep mode	Peripheral: 4 MHz*2	2	2.5	mA	*1
			Sub Sleep mode	Peripheral: 32 kHz	0.2	0.45	mA	*1, *6
			Low-speed CR Sleep mode	Peripheral: 100 kHz	0.25	0.65	mA	*1

*1: When all ports are fixed.

*2: When setting it to 4 MHz by trimming.

*3: T_A=+25°C, V_{CC}=3.3 V

*4: T_A=+85°C, V_{CC}=5.5 V

*5: When using the crystal oscillator of 4 MHz(Including the current consumption of the oscillation circuit)

*6: When using the crystal oscillator of 32 kHz(Including the current consumption of the oscillation circuit)

Parameter	Symbol	Pin name	Conditions		Value		Unit	Remarks
					Typ*2	Max*3		
Power supply current	I_{CCT}	VCC	Main Timer mode	T_A = + 25°C, When LVD is off	0.9	3.3	mA	*1, *4
				T_A = + 85°C, When LVD is off	1.5	3.5	mA	*1, *4
			Sub Timer mode	T_A = + 25°C, When LVD is off	7.5	60	µA	*1, *5
				T_A = + 85°C, When LVD is off	16	150	µA	*1, *5
	I_{CCR}		RTC mode	T_A = + 25°C, When LVD is off	1.5	6.5	µA	*1, *5
				T_A = + 85°C, When LVD is off	6	89	µA	*1, *5
	I_{CCH}		Stop mode	T_A = + 25°C, When LVD is off	0.6	5	µA	*1
				T_A = + 85°C, When LVD is off	4.2	87	µA	*1
	I_{CCRD}		Deep Standby RTC mode	T_A = + 25°C, When LVD is off	1.3	4.5	µA	*1, *5
				T_A = + 85°C, When LVD is off	3	32	µA	*1, *5
	I_{CCHD}		Deep Standby Stop mode	T_A = + 25°C, When LVD is off	0.4	3	µA	*1
				T_A = + 85°C, When LVD is off	1.4	30	µA	*1

*1: When all ports are fixed.

*2: V_{CC}=3.3 V

*3: V_{CC}=5.5 V

*4: When using the crystal oscillator of 4 MHz(Including the current consumption of the oscillation circuit)

*5: When using the crystal oscillator of 32 kHz(Including the current consumption of the oscillation circuit)

Low Voltage Detection Current

(V_{CC} = AV_{CC} = 1.8 V to 5.5 V, V_{SS} = AV_{SS} = 0 V, T_A = - 40°C to + 85°C)

Parameter	Symbol	Pin name	Conditions	Value		Unit	Remarks
				Typ*	Max		
Low-voltage detection circuit (LVD) power supply current	I_{CCLVD}	VCC	For occurrence of reset or for occurrence of interrupt in normal mode operation	10	20	µA	When not detected
			For occurrence of reset and for occurrence of interrupt in normal mode operation	14	30	µA	
			For occurrence of interrupt in low-power mode operation	0.3	2	µA	When not detected

*: When V_{CC}=3.3 V

Flash Memory Current

(V_{CC} = 1.8 V to 5.5 V, V_{SS} = 0 V, T_A = - 40°C to + 85°C)

Parameter	Symbol	Pin name	Conditions	Value		Unit	Remarks
				Typ	Max		
Flash memory write/erase current	$I_{CCFLASH}$	VCC	At Write/Erase	10.8	11.9	mA	

A/D Converter Current

(V_{CC} = AV_{CC} = 1.8 V to 5.5 V, V_{SS} = AV_{SS} = 0 V, T_A = - 40°C to + 85°C)

Parameter	Symbol	Pin name	Conditions	Value		Unit	Remarks
				Typ	Max		
Power supply current	I_{CCAD}	AVCC	At 1unit operation	1.4	2.5	mA	
			At stop	0.1	0.35	µA	
Reference power supply current	I_{CCAVRH}	AVRH	At 1unit operation AVRH=5.5 V	0.5	1.5	mA	
			At stop	0.1	0.3	µA	

D/A Converter Current

(V_{CC} = AV_{CC} = 1.8 V to 5.5 V, V_{SS} = AV_{SS} = 0 V, T_A = - 40°C to + 85°C)

Parameter	Symbol	Pin name	Conditions	Value		Unit	Remarks
				Typ	Max		
Power supply current	IDDA	AVCC	At D/A 1ch. operation AV_{CC}=3.3 V	314	440	µA	*1, *2
			At D/A 1ch. operation AV_{CC}=5.0 V	476	670	µA	*1, *2
	IDSA		At D/A stop	-	1.0	µA	*1

*1: No-load

*2: Generates the max current by the CODE about 0x200

11.3.2 Pin Characteristics

(V_{CC} = AV_{CC} = 1.8V to 5.5V, V_{SS} = AV_{SS} = 0V, T_A = - 40°C to + 85°C)

Parameter	Symbol	Pin name	Conditions	Value			Unit	Remarks
				Min	Typ	Max		
H level input voltage (hysteresis input)	V_{IHS}	MD0, MD1, PE0, PE2, PE3, P46, P47, P3A, P3B, P3C, P3D, P3E, P3F, INITX	-	V_{CC} × 0.8	-	V_{CC} + 0.3	V	
		P0A, P0B, P0C, P4C, P60, P80, P81, P82	-	V_{CC} × 0.7	-	V_{SS} + 5.5	V	5V tolerant
		CMOS hysteresis input pins other than the above	-	V_{CC} × 0.7	-	V_{CC} + 0.3	V	
L level input voltage (hysteresis input)	V_{ILS}	MD0, MD1, PE0, PE2, PE3, P46, P47, INITX	-	V_{SS} - 0.3	-	V_{CC} × 0.2	V	
		CMOS hysteresis input pins other than the above	-	V_{SS} - 0.3	-	V_{CC} × 0.3	V	
H level output voltage	V_{OH}	Pxx	V_{CC} ≥ 4.5 V, I_{OH} = - 4 mA	V_{CC} - 0.5	-	V_{CC}	V	
			V_{CC} < 4.5 V, I_{OH} = - 1 mA					
L level output voltage	V_{OL}	Pxx	V_{CC} ≥ 4.5 V, I_{OL} = 4 mA	V_{SS}	-	0.4	V	
			V_{CC} < 4.5 V, I_{OL} = 2 mA					
Input leak current	I_{IL}	-	-	- 5	-	+ 5	µA	
		CEC0, CEC1	V_{CC} = AV_{CC} = AVRH = V_{SS} = AV_{SS} = 0.0 V	-	-	+ 1.8		
Pull-up resistor value	R_{PU}	Pull-up pin	V_{CC} ≥ 4.5 V	25	50	100	kΩ	
			V_{CC} < 4.5 V	40	100	400		
Input capacitance	C_{IN}	Other than VCC, VSS, AVCC, AVSS, AVRH	-	-	5	15	pF	

11.4 AC Characteristics

11.4.1 Main Clock Input Characteristics

(V_{CC} = 1.8V to 5.5V, V_{SS} = 0V, T_A = - 40°C to + 85°C)

Parameter	Symbol	Pin name	Conditions	Value		Unit	Remarks
				Min	Max		
Input frequency	f_{CH}	X0, X1	$V_{CC} \geq 2.0$ V	4	20	MHz	When crystal oscillator is connected
			$V_{CC} < 2.0$ V	4	4	MHz	
			$V_{CC} \geq 4.5$ V	4	20	MHz	When using external clock
			$V_{CC} < 4.5$ V	4	16	MHz	
Input clock cycle	t_{CYLH}		$V_{CC} \geq 4.5$ V	50	250	ns	When using external clock
			$V_{CC} < 4.5$ V	62.5	250	ns	
Input clock pulse width	-		PWH/tCYLH, PWL/tCYLH	45	55	%	When using external clock
Input clock rising time and falling time	t_{CF}, t_{CR}		-	-	5	ns	When using external clock
Internal operating clock*1 frequency	f_{CM}	-	-	-	20	MHz	Master clock
	f_{CC}	-	-	-	20	MHz	Base clock (HCLK/FCLK)
	f_{CP0}	-	-	-	20	MHz	APB0 bus clock*2
	f_{CP1}	-	-	-	20	MHz	APB1 bus clock*2
	f_{CP2}	-	-	-	20	MHz	APB2 bus clock*2
Internal operating clock*1 cycle time	t_{CYCC}	-	-	50	-	ns	Base clock (HCLK/FCLK)
	t_{CYCP0}	-	-	50	-	ns	APB0 bus clock*2
	t_{CYCP1}	-	-	50	-	ns	APB1 bus clock*2
	t_{CYCP2}	-	-	50	-	ns	APB2 bus clock*2

*1: For more information about each internal operating clock, see Chapter 2-1: Clock in FM3 Family Peripheral Manual Main part (002-05586).

*2: For about each APB bus which each peripheral is connected to, see Block Diagram in this data sheet.

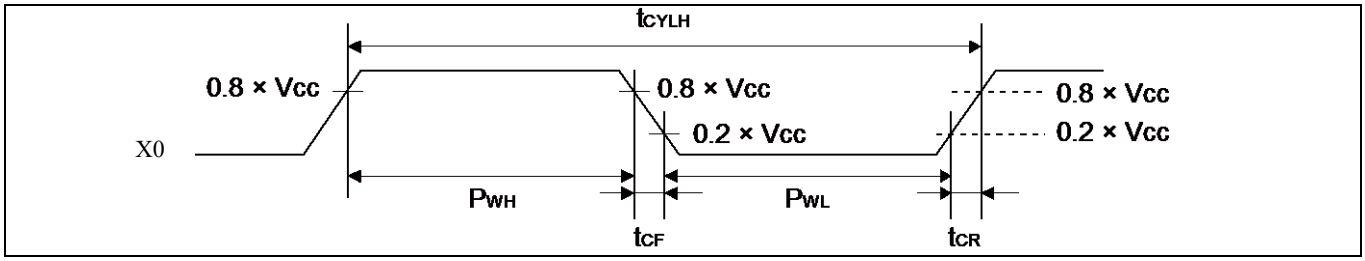

11.4.2 Sub Clock Input Characteristics

(V_{CC} = 1.8V to 5.5V, V_{SS} = 0V, T_A = - 40°C to + 85°C)

Parameter	Symbol	Pin name	Conditions	Value			Unit	Remarks
				Min	Typ	Max		
Input frequency	f_{CL}	X0A, X1A	-	-	32.768	-	kHz	When crystal oscillator is connected
			-	32	-	100	kHz	When using external clock
Input clock cycle	t_{CYLL}		-	10	-	31.25	µs	When using external clock
Input clock pulse width	-		PWH/tCYLL, PWL/tCYLL	45	-	55	%	When using external clock

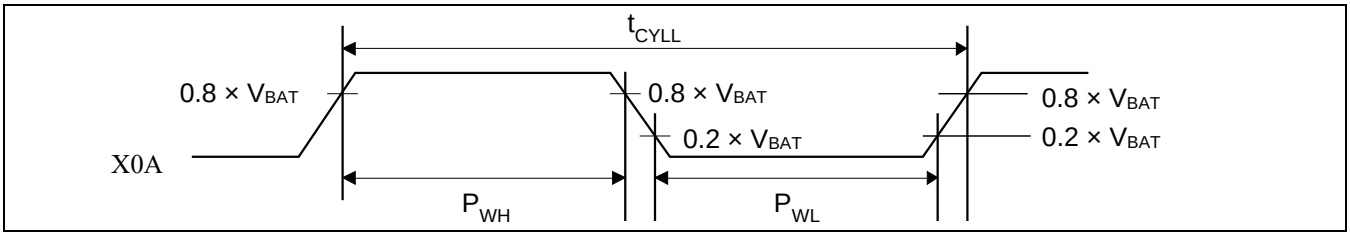

11.4.3 Built-in CR Oscillation Characteristics

Built-in High-speed CR

(V_{CC} = 1.8V to 5.5V, V_{SS} = 0V, T_A = - 40°C to + 85°C)

Parameter	Symbol	Conditions		Value			Unit	Remarks
				Min	Typ	Max		
Clock frequency	f_{CRH}	V_{CC} ≥ 2.2 V	T_A = + 25°C	3.92	4	4.08	MHz	When trimming*1
			T_A = - 40°C to + 85°C	3.8	4	4.2		
			T_A = - 40°C to + 85°C	2.3	-	7.03		When not trimming
		V_{CC} < 2.2 V	T_A = + 25°C	3.4	4	4.6	MHz	When trimming*1
			T_A = - 40°C to + 85°C	3.16	4	4.84		
			T_A = - 40°C to + 85°C	2.3	-	7.03		When not trimming
Frequency stabilization time	t_{CRWT}	-		-	-	10	µs	*2

*1: In the case of using the values in CR trimming area of Flash memory at shipment for frequency trimming.

*2: This is the time to stabilize the frequency of High-speed CR clock after setting trimming value. This period is able to use High-speed CR clock as source clock.

Built-in Low-speed CR

(V_{CC} = 1.8V to 5.5V, V_{SS} = 0V, T_A = - 40°C to + 85°C)

Parameter	Symbol	Condition	Value			Unit	Remarks
			Min	Typ	Max		
Clock frequency	f_{CRL}	-	50	100	150	kHz	

11.4.4 Operating Conditions of Main PLL (In the Case of Using Main Clock for Input Clock of PLL)

(V_{CC} = 1.8V to 5.5V, V_{SS} = 0V, T_A = - 40°C to + 85°C)

Parameter	Symbol	Value			Unit	Remarks
		Min	Typ	Max		
PLL oscillation stabilization wait time*1 (LOCK UP time)	t_{LOCK}	200	-	-	µs	
PLL input clock frequency	f_{PLLI}	4	-	20	MHz	
PLL multiplication rate	-	1	-	5	multiplier	
PLL macro oscillation clock frequency	f_{PLLO}	10	-	20	MHz	
Main PLL clock frequency*2	f_{CLKPLL}	-	-	20	MHz	

*1: Time from when the PLL starts operating until the oscillation stabilizes.

*2: For more information about Main PLL clock (CLKPLL), see Chapter 2-1: Clock in FM3 Family Peripheral Manual.

11.4.5 Operating Conditions of Main PLL (In the case of using the built-in High-speed CR for the input clock of the Main PLL)

(V_{CC} = 2.2V to 5.5V, V_{SS} = 0V, T_A = - 40°C to + 85°C)

Parameter	Symbol	Value			Unit	Remarks
		Min	Typ	Max		
PLL oscillation stabilization wait time*1 (LOCK UP time)	t_{LOCK}	200	-	-	µs	
PLL input clock frequency	f_{PLLI}	3.8	4	4.2	MHz	
PLL multiplication rate	-	3	-	4	multiplier	
PLL macro oscillation clock frequency	f_{PLLO}	11.4	-	16.8	MHz	
Main PLL clock frequency*2	f_{CLKPLL}	-	-	16.8	MHz	

*1: Time from when the PLL starts operating until the oscillation stabilizes.

*2: For more information about Main PLL clock (CLKPLL), see Chapter 2-1: Clock in FM3 Family Peripheral Manual.

Note:

- *Make sure to input to the Main PLL source clock, the High-speed CR clock (CLKHC) that the frequency has been trimmed. When setting PLL multiple rate, please take the accuracy of the built-in High-speed CR clock into account and prevent the master clock from exceeding the maximum frequency.*

Main PLL connection

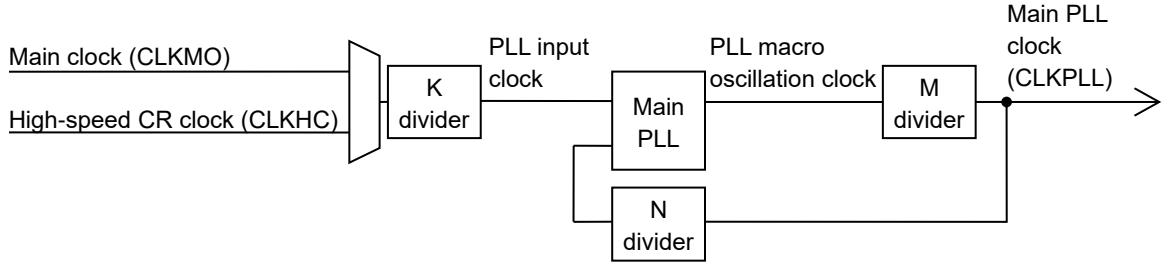

11.4.6 Reset Input Characteristics

(V_{CC} = 1.8V to 5.5V, V_{SS} = 0V, T_A = - 40°C to + 85°C)

Parameter	Symbol	Pin name	Conditions	Value		Unit	Remarks
				Min	Max		
Reset input time	t_{INITX}	INITX	-	500	-	ns	
				1.5	-	ms	When RTC mode or Stop mode
				1.5	-	ms	When Deep Standby mode

11.4.7 Power-on Reset Timing

(V_{CC} = 1.8V to 5.5V, V_{SS} = 0V, T_A = - 40°C to + 85°C)

Parameter	Symbol	Pin name	Value			Unit	Remarks
			Min	Typ	Max		
Power supply rising time	dV/dt	VCC	0.1	-	-	V/ms	
Power supply shut down time	t_{OFF}		1	-	-	ms	
Reset release voltage	V_{DETH}		1.44	1.60	1.76	V	When voltage rises
Reset detection voltage	V_{DETL}		1.39	1.55	1.71	V	When voltage drops
Time until releasing Power-on reset	t_{PRT}		0.46	-	11.4	ms	dV/dt ≥ 0.1 mV/µs
Reset detection delay time	t_{OFFD}		-	-	0.4	ms	dV/dt ≥ -0.04 mV/µs

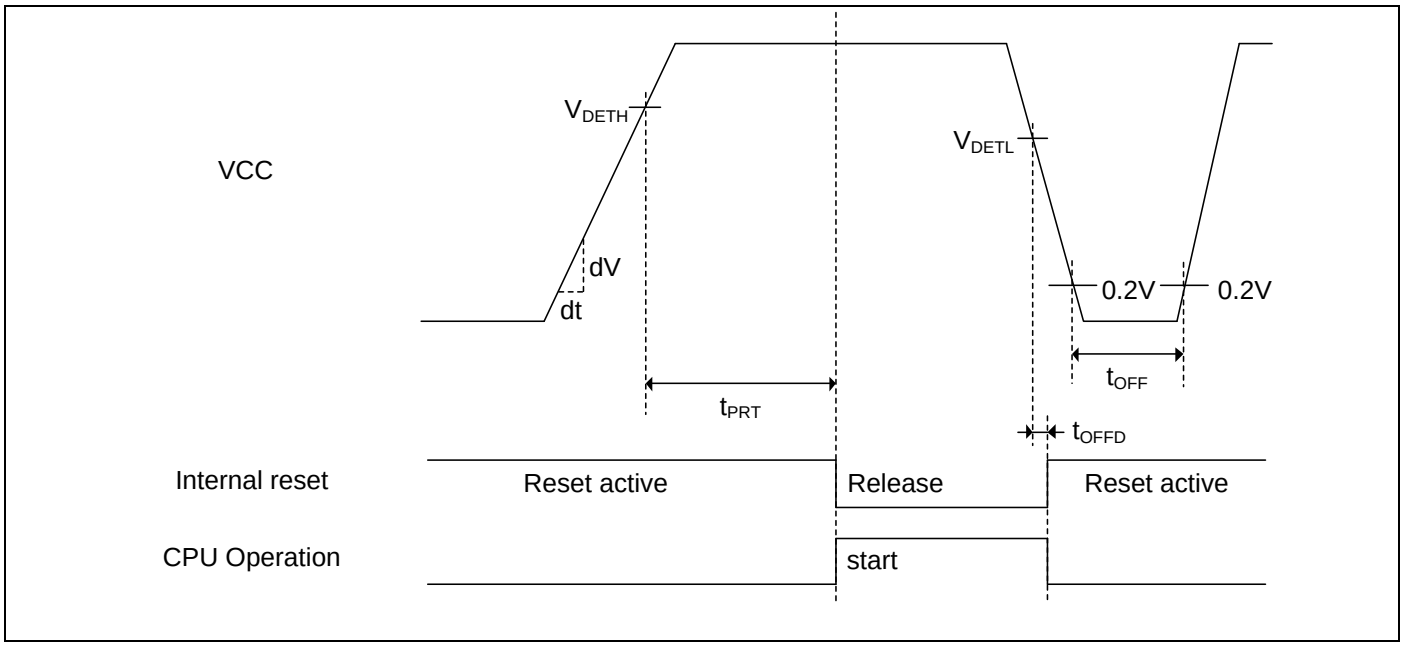

11.4.8 Base Timer Input Timing

Timer input timing

(V_{CC} = 1.8V to 5.5V, V_{SS} = 0V, T_A = - 40°C to + 85°C)

Parameter	Symbol	Pin name	Conditions	Value		Unit	Remarks
				Min	Max		
Input pulse width	t_{TIWH}, t_{TIWL}	TIOAn/TIOBn (when using as ECK, TIN)	-	$2t_{CYCP}$	-	ns	

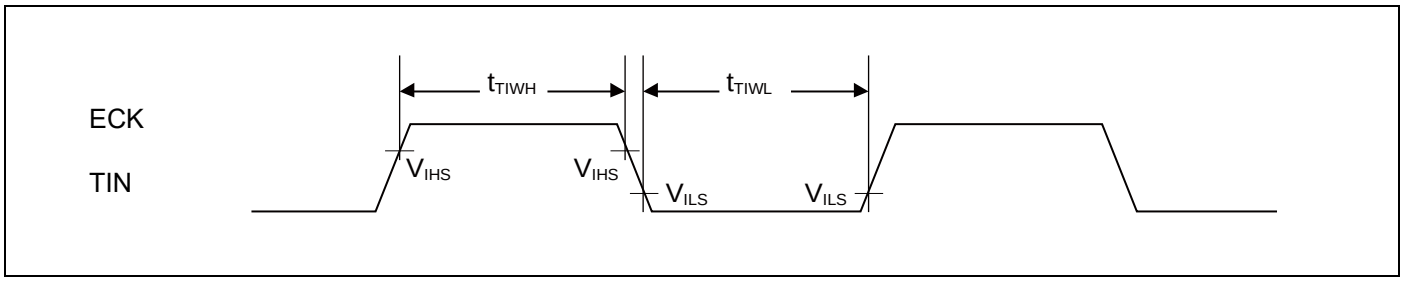

Trigger input timing

(V_{CC} = 1.8V to 5.5V, V_{SS} = 0V, T_A = - 40°C to + 85°C)

Parameter	Symbol	Pin name	Conditions	Value		Unit	Remarks
				Min	Max		
Input pulse width	t_{TRGH}, t_{TRGL}	TIOAn/TIOBn (when using as TGIN)	-	$2t_{CYCP}$	-	ns	

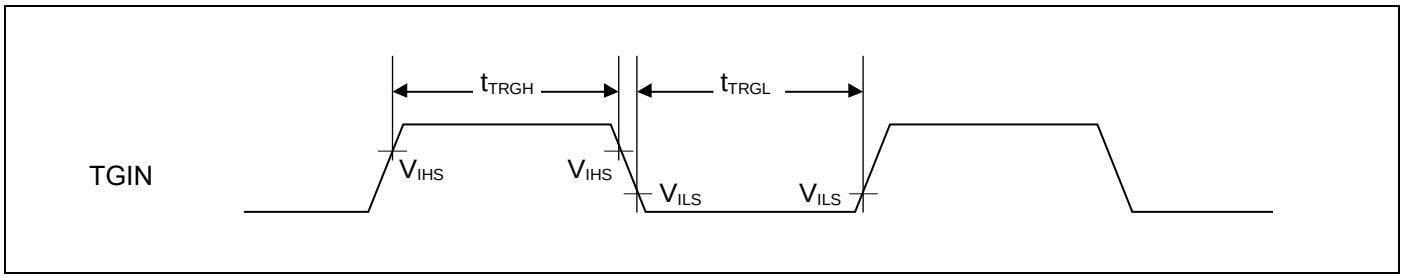

Note:

- *t_{CYCP} indicates the APB bus clock cycle time.*
  About the APB bus number which the Base Timer is connected to, see Block Diagram in this data sheet.

11.4.9 CSIO/UART Timing

CSIO (SPI = 0, SCINV = 0)

(V_{CC} = 1.8V to 5.5V, V_{SS} = 0V, T_A = - 40°C to + 85°C)

Parameter	Symbol	Pin name	Conditions	V_{CC} < 2.7 V		2.7 V ≤V_{CC}< 4.5 V		V_{CC} ≥ 4.5 V		Unit
				Min	Max	Min	Max	Min	Max	
Baud rate	-	-	-	-	5	-	5	-	5	Mbps
Serial clock cycle time	t_{SCYC}	SCKx	Master mode	$4t_{CYCP}$	-	$4t_{CYCP}$	-	$4t_{CYCP}$	-	ns
SCK ↓ → SOT delay time	t_{SLOVI}	SCKx, SOTx		-40	+40	-30	+30	-20	+20	ns
SIN → SCK ↑ setup time	t_{IVSHI}	SCKx, SINx		75	-	50	-	30	-	ns
SCK ↑ → SIN hold time	t_{SHIXI}	SCKx, SINx		0	-	0	-	0	-	ns
Serial clock L pulse width	t_{SLSH}	SCKx	Slave mode	$2t_{CYCP}$ - 10	-	$2t_{CYCP}$ - 10	-	$2t_{CYCP}$ - 10	-	ns
Serial clock H pulse width	t_{SHSL}	SCKx		t_{CYCP} + 10	-	t_{CYCP} + 10	-	t_{CYCP} + 10	-	ns
SCK ↓ → SOT delay time	t_{SLOVE}	SCKx, SOTx		-	75	-	50	-	30	ns
SIN → SCK ↑ setup time	t_{IVSHE}	SCKx, SINx		10	-	10	-	10	-	ns
SCK ↑ → SIN hold time	t_{SHIXE}	SCKx, SINx		20	-	20	-	20	-	ns
SCK falling time	t_F	SCKx		-	5	-	5	-	5	ns
SCK rising time	t_R	SCKx		-	5	-	5	-	5	ns

Notes:

- *The above characteristics apply to clock synchronous mode.*
- *t_{CYCP} indicates the APB bus clock cycle time.*
  About the APB bus number which Multi-function serial is connected to, see Block Diagram in this data sheet.
- *These characteristics only guarantee the same relocate port number.*
  For example, the combination of SCKx_0 and SOTx_1 is not guaranteed.
- *When the external load capacitance C_L = 50 pF.*

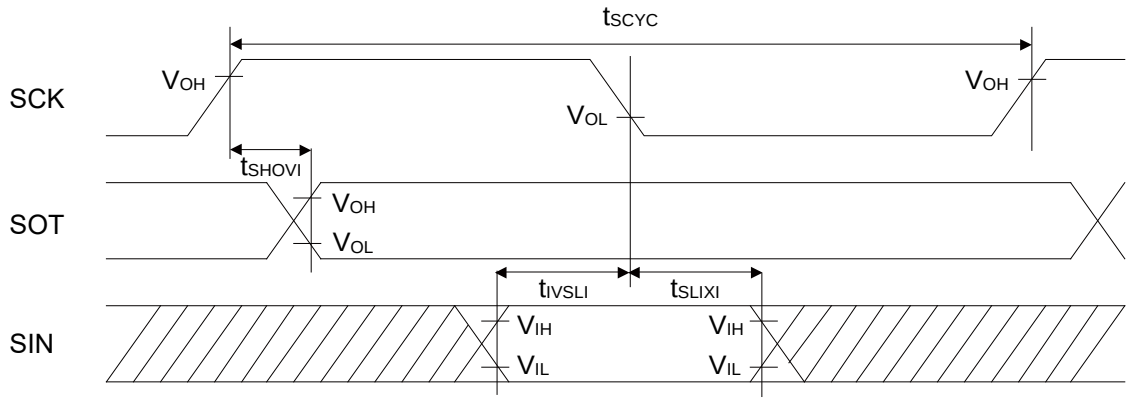

Master mode

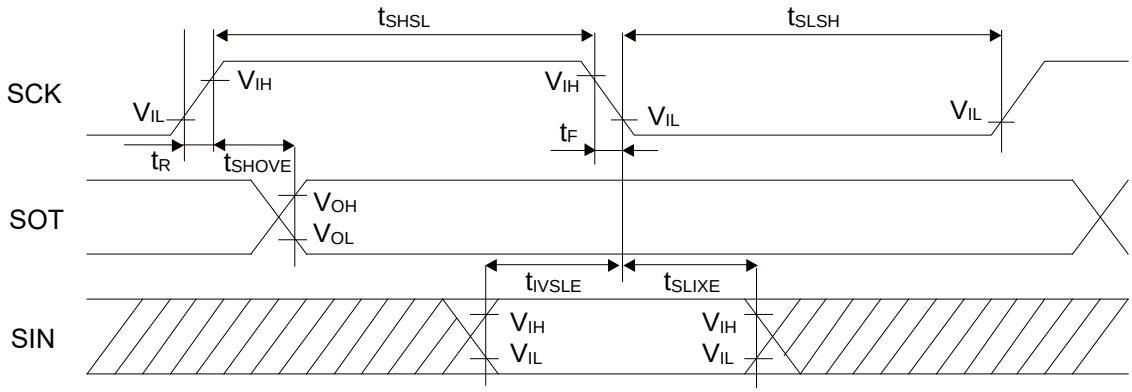

Slave mode

CSIO (SPI = 0, SCINV = 1)

(V_{CC} = 1.8V to 5.5V, V_{SS} = 0V, T_A = - 40°C to + 85°C)

Parameter	Symbol	Pin name	Conditions	V_{CC} < 2.7 V		2.7 V ≤V_{CC} < 4.5 V		V_{CC} ≥ 4.5 V		Unit
				Min	Max	Min	Max	Min	Max	
Baud rate	-	-	-	-	5	-	5	-	5	Mbps
Serial clock cycle time	t_{SCYC}	SCKx	Master mode	$4t_{CYCP}$	-	$4t_{CYCP}$	-	$4t_{CYCP}$	-	ns
SCK ↑ → SOT delay time	t_{SHOVI}	SCKx, SOTx		-40	+40	-30	+30	-20	+20	ns
SIN → SCK ↓ setup time	t_{IVSLI}	SCKx, SINx		75	-	50	-	30	-	ns
SCK ↓ → SIN hold time	t_{SLIXI}	SCKx, SINx		0	-	0	-	0	-	ns
Serial clock L pulse width	t_{SLSH}	SCKx	Slave mode	$2t_{CYCP}$ - 10	-	$2t_{CYCP}$ - 10	-	$2t_{CYCP}$ - 10	-	ns
Serial clock H pulse width	t_{SHSL}	SCKx		t_{CYCP} + 10	-	t_{CYCP} + 10	-	t_{CYCP} + 10	-	ns
SCK ↑ → SOT delay time	t_{SHOVE}	SCKx, SOTx		-	75	-	50	-	30	ns
SIN → SCK ↓ setup time	t_{IVSLE}	SCKx, SINx		10	-	10	-	10	-	ns
SCK ↓ → SIN hold time	t_{SLIXE}	SCKx, SINx		20	-	20	-	20	-	ns
SCK falling time	t_F	SCKx		-	5	-	5	-	5	ns
SCK rising time	t_R	SCKx		-	5	-	5	-	5	ns

Notes:

- *The above characteristics apply to clock synchronous mode.*
- *t_{CYCP} indicates the APB bus clock cycle time.*
  About the APB bus number which Multi-function serial is connected to, see Block Diagram in this data sheet.
- *These characteristics only guarantee the same relocate port number.*
  For example, the combination of SCKx_0 and SOTx_1 is not guaranteed.
- *When the external load capacitance C_L = 50 pF.*

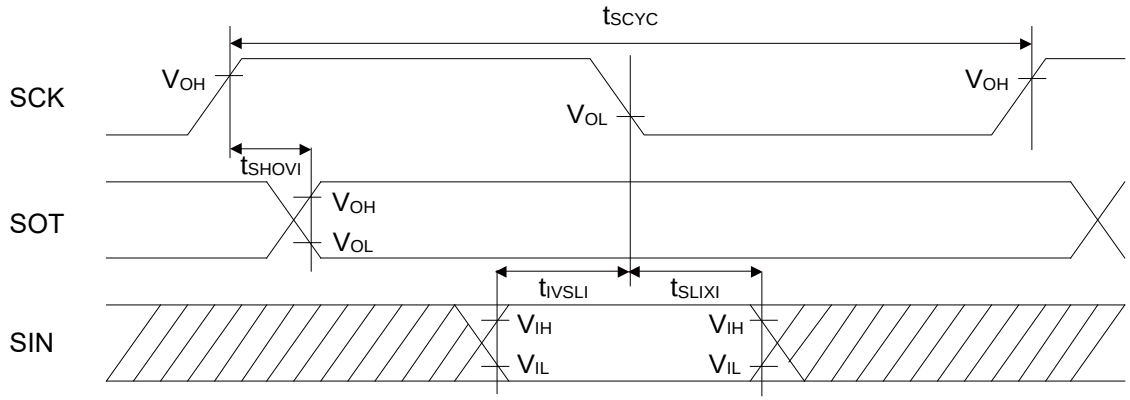

Master mode

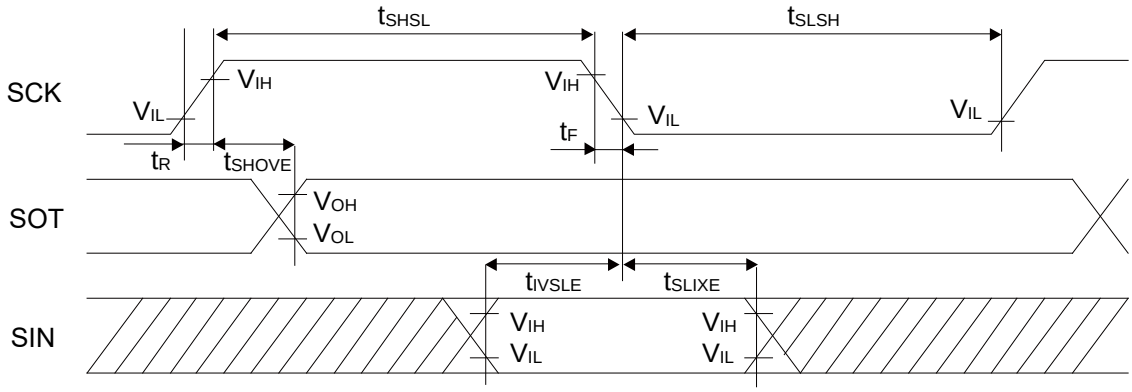

Slave mode

CSIO (SPI = 1, SCINV = 0)

(V_{CC} = 1.8V to 5.5V, V_{SS} = 0V, T_A = - 40°C to + 85°C)

Parameter	Symbol	Pin name	Conditions	V_{CC} < 2.7 V		2.7 V ≤V_{CC} < 4.5 V		V_{CC} ≥ 4.5 V		Unit
				Min	Max	Min	Max	Min	Max	
Baud rate	-	-	-	-	5	-	5	-	5	Mbps
Serial clock cycle time	t_{SCYC}	SCKx	Master mode	$4t_{CYCP}$	-	$4t_{CYCP}$	-	$4t_{CYCP}$	-	ns
SCK ↑ → SOT delay time	t_{SHOVI}	SCKx, SOTx		-40	+40	-30	+30	-20	+20	ns
SIN → SCK ↓ setup time	t_{IVSLI}	SCKx, SINx		75	-	50	-	30	-	ns
SCK ↓ → SIN hold time	t_{SLIXI}	SCKx, SINx		0	-	0	-	0	-	ns
SOT → SCK ↓ delay time	t_{SOVLI}	SCKx, SOTx		$2t_{CYCP}$ - 30	-	$2t_{CYCP}$ - 30	-	$2t_{CYCP}$ - 30	-	ns
Serial clock L pulse width	t_{SLSH}	SCKx	Slave mode	$2t_{CYCP}$ - 10	-	$2t_{CYCP}$ - 10	-	$2t_{CYCP}$ - 10	-	ns
Serial clock H pulse width	t_{SHSL}	SCKx		t_{CYCP} + 10	-	t_{CYCP} + 10	-	t_{CYCP} + 10	-	ns
SCK ↑ → SOT delay time	t_{SHOVE}	SCKx, SOTx		-	75	-	50	-	30	ns
SIN → SCK ↓ setup time	t_{IVSLE}	SCKx, SINx		10	-	10	-	10	-	ns
SCK ↓ → SIN hold time	t_{SLIXE}	SCKx, SINx		20	-	20	-	20	-	ns
SCK falling time	t_F	SCKx		-	5	-	5	-	5	ns
SCK rising time	t_R	SCKx		-	5	-	5	-	5	ns

Notes:

- *The above characteristics apply to clock synchronous mode.*
- *t_{CYCP} indicates the APB bus clock cycle time.*
  About the APB bus number which Multi-function serial is connected to, see Block Diagram in this data sheet.
- *These characteristics only guarantee the same relocate port number.*
  For example, the combination of SCKx_0 and SOTx_1 is not guaranteed.
- *When the external load capacitance C_L = 50 pF.*

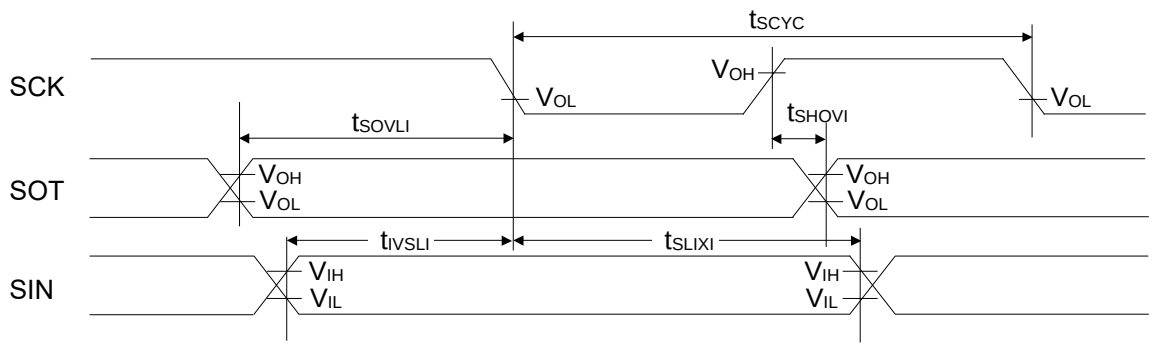

Master mode

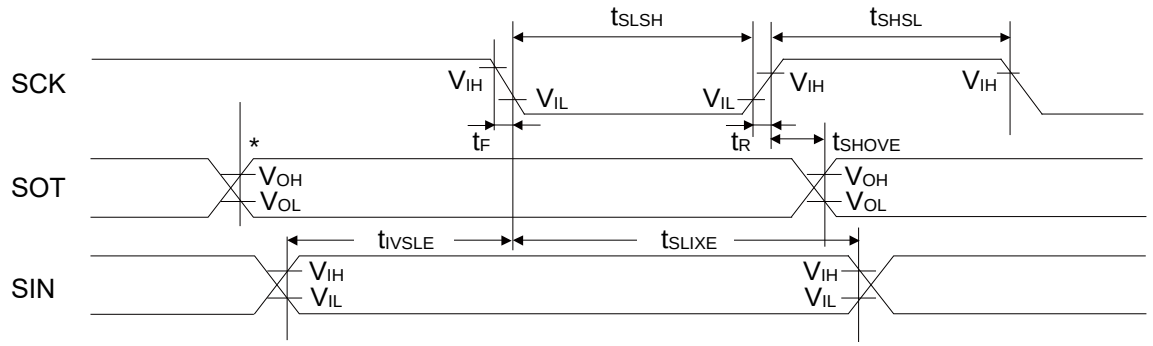

Slave mode

*: Changes when writing to TDR register

CSIO (SPI = 1, SCINV = 1)

(V_{CC} = 1.8V to 5.5V, V_{SS} = 0V, T_A = - 40°C to + 85°C)

Parameter	Symbol	Pin name	Conditions	V_{CC} < 2.7 V		2.7 V ≤V_{CC} < 4.5 V		V_{CC} ≥ 4.5 V		Unit
				Min	Max	Min	Max	Min	Max	
Baud rate	-	-	-	-	5	-	5	-	5	Mbps
Serial clock cycle time	t_{SCYC}	SCKx	Master mode	$4t_{CYCP}$	-	$4t_{CYCP}$	-	$4t_{CYCP}$	-	ns
SCK ↓ → SOT delay time	t_{SLOVI}	SCKx, SOTx		-40	+40	-30	+30	-20	+20	ns
SIN → SCK ↑ setup time	t_{IVSHI}	SCKx, SINx		75	-	50	-	30	-	ns
SCK ↑ → SIN hold time	t_{SHIXI}	SCKx, SINx		0	-	0	-	0	-	ns
SOT → SCK ↑ delay time	t_{SOVHI}	SCKx, SOTx		$2t_{CYCP}$ - 30	-	$2t_{CYCP}$ - 30	-	$2t_{CYCP}$ - 30	-	ns
Serial clock L pulse width	t_{SLSH}	SCKx	Slave mode	$2t_{CYCP}$ - 10	-	$2t_{CYCP}$ - 10	-	$2t_{CYCP}$ - 10	-	ns
Serial clock H pulse width	t_{SHSL}	SCKx		t_{CYCP} + 10	-	t_{CYCP} + 10	-	t_{CYCP} + 10	-	ns
SCK ↓ → SOT delay time	t_{SLOVE}	SCKx, SOTx		-	75	-	50	-	30	ns
SIN → SCK ↑ setup time	t_{IVSHE}	SCKx, SINx		10	-	10	-	10	-	ns
SCK ↑ → SIN hold time	t_{SHIXE}	SCKx, SINx		20	-	20	-	20	-	ns
SCK falling time	t_F	SCKx		-	5	-	5	-	5	ns
SCK rising time	t_R	SCKx		-	5	-	5	-	5	ns

Notes:

- *The above characteristics apply to clock synchronous mode.*
- *t_{CYCP} indicates the APB bus clock cycle time.*
  About the APB bus number which Multi-function serial is connected to, see Block Diagram in this data sheet.
- *These characteristics only guarantee the same relocate port number.*
  For example, the combination of SCKx_0 and SOTx_1 is not guaranteed.
- *When the external load capacitance C_L = 50 pF.*

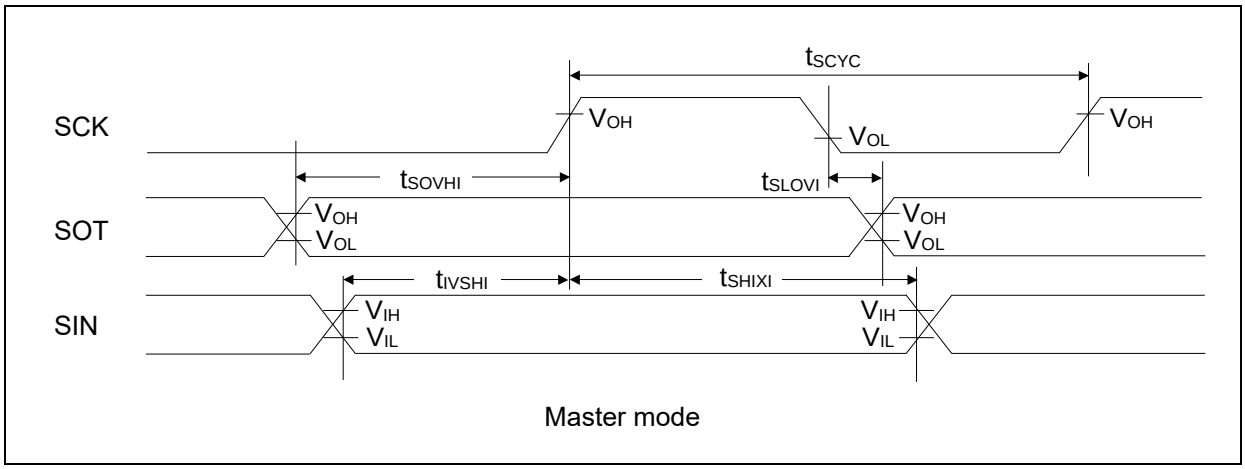

Master mode

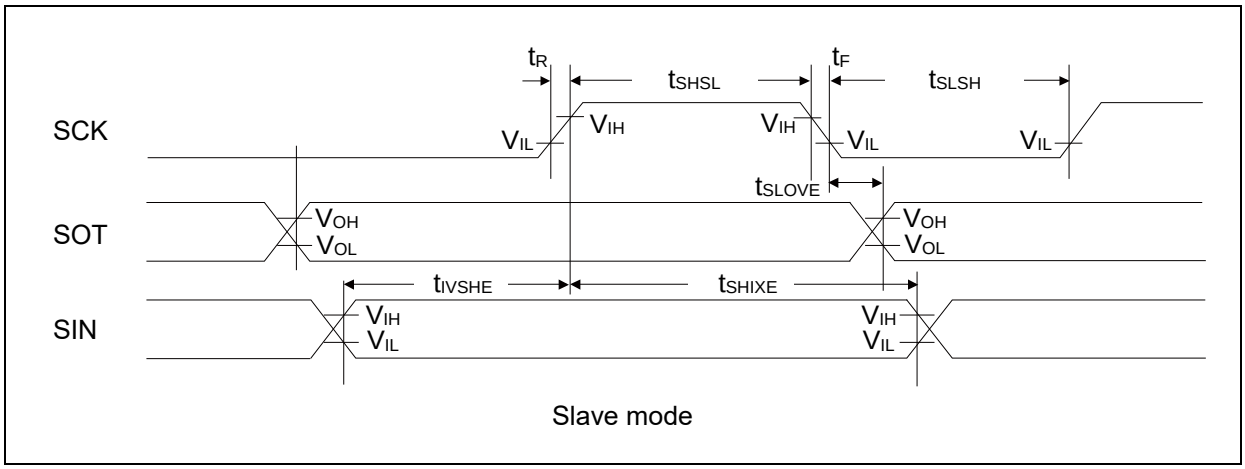

Slave mode

UART external clock input (EXT = 1)

(V_{CC} = 1.8V to 5.5V, V_{SS} = 0V, T_A = - 40°C to + 85°C)

Parameter	Symbol	Conditions	Value		Unit	Remarks
			Min	Max		
Serial clock L pulse width	t_{SLSH}	C_L = 50 pF	t_{CYCP} + 10	-	ns	
Serial clock H pulse width	t_{SHSL}		t_{CYCP} + 10	-	ns	
SCK falling time	t_F		-	5	ns	
SCK rising time	t_R		-	5	ns	

SCK

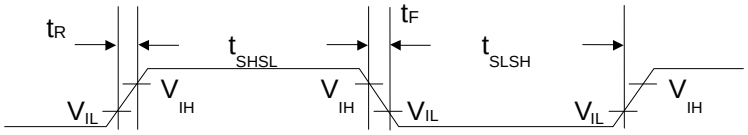

11.4.10 External Input Timing

(V_{CC} = 1.8V to 5.5V, V_{SS} = 0V, T_A = - 40°C to + 85°C)

Parameter	Symbol	Pin name	Conditions	Value		Unit	Remarks
				Min	Max		
Input pulse width	t_{INH}, t_{INL}	ADTG	-	$2t_{CYCP}$*1	-	ns	A/D converter trigger input
		FRCKx					Free-run timer input clock
		ICxx					Input capture
		DTTIxX	-	$2t_{CYCP}$*1	-	ns	Waveform generator
		IGTRG	-	$2t_{CYCP}$*1	-	ns	PPG IGBT mode
		INTxx, NMIX	*2	$2t_{CYCP}$ + 100*1	-	ns	External interrupt, NMI
			*3	500	-	ns	
		WKUPx	*4	500	-	ns	Deep standby wake up

*1: t_{CYCP} indicates the APB bus clock cycle time.
About the APB bus number which the A/D converter, Multi-function Timer, PPG, External interrupt, Deep Standby mode Controller are connected to, see Block Diagram in this data sheet.

*2: When in Run mode, in Sleep mode.

*3: When in Timer mode, in RTC mode, in Stop mode.

*4: When in Deep Standby RTC mode, in Deep Standby Stop mode.

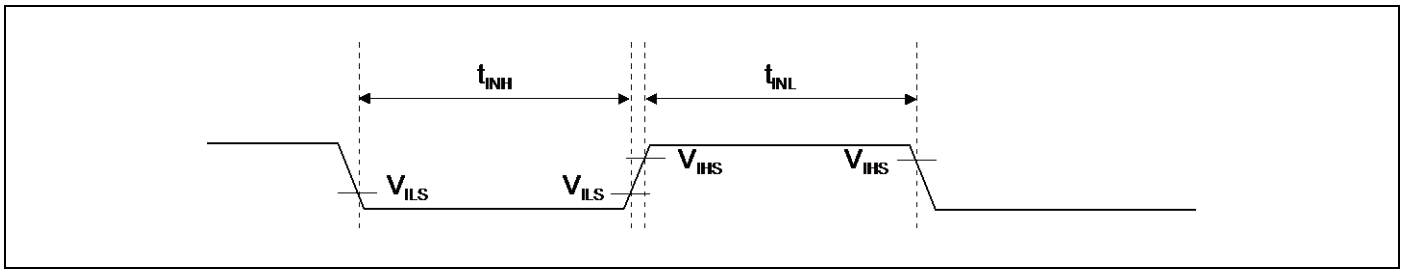

11.4.11 I²C Timing

(V_{CC} = 1.8V to 5.5V, V_{SS} = 0V, T_A = - 40°C to + 85°C)

Parameter	Symbol	Conditions	Standard-mode		Fast-mode		Unit	Remarks
			Min	Max	Min	Max		
SCL clock frequency	f_{SCL}	C_L = 50 pF, R = (V_P/I_{OL})*1	0	100	0	400	kHz	
(Repeated) START condition hold time SDA ↓ → SCL ↓	t_{HDSTA}		4.0	-	0.6	-	µs	
SCL clock L width	t_{LOW}		4.7	-	1.3	-	µs	
SCL clock H width	t_{HIGH}		4.0	-	0.6	-	µs	
(Repeated) START condition setup time SCL ↑ → SDA ↓	t_{SUSTA}		4.7	-	0.6	-	µs	
Data hold time SCL ↓ → SDA ↓ ↑	t_{HDDAT}		0	3.45*2	0	0.9*3	µs	
Data setup time SDA ↓ ↑ → SCL ↑	t_{SUDAT}		250	-	100	-	ns	
STOP condition setup time SCL ↑ → SDA ↑	t_{SUSTO}		4.0	-	0.6	-	µs	
Bus free time between STOP condition and START condition	t_{BUF}		4.7	-	1.3	-	µs	
Noise filter	t_{SP}	-	2t_{CYCP}*4	-	2t_{CYCP}*4	-	ns	

*1: R and C_L represent the pull-up resistor and load capacitance of the SCL and SDA lines, respectively.
V_P indicates the power supply voltage of the pull-up resistor and I_{OL} indicates V_{OL} guaranteed current.

*2: The maximum t_{HDDAT} must satisfy that it does not extend at least L period (t_{LOW}) of device's SCL signal.

*3: A Fast-mode I²C bus device can be used on a Standard-mode I²C bus system as long as the device satisfies the requirement of t_{SUDAT} ≥ 250 ns.

*4: t_{CYCP} is the APB bus clock cycle time.
About the APB bus number which I²C is connected to, see Block Diagram in this data sheet.
To use Standard-mode, set the APB bus clock at 2 MHz or more.
To use Fast-mode, set the APB bus clock at 8 MHz or more.

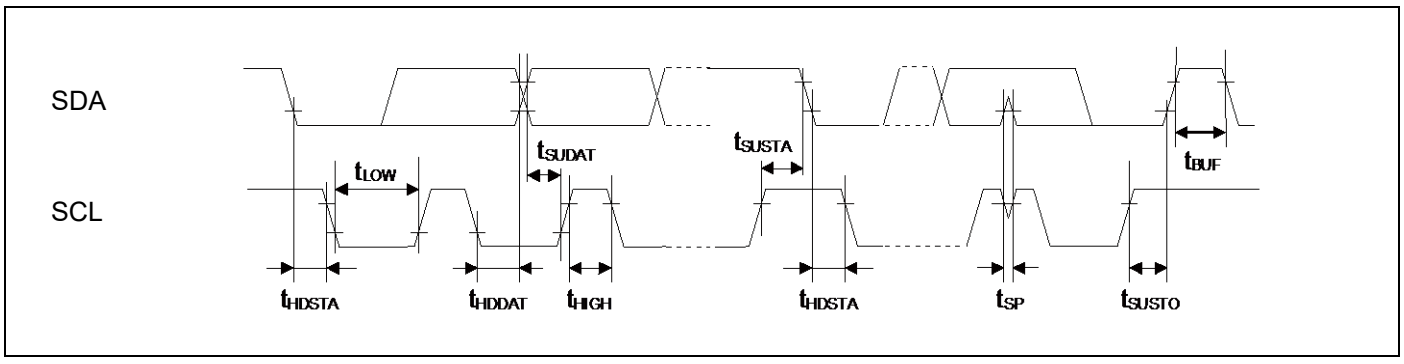

11.4.12 JTAG Timing

(V_{CC} = 1.8V to 5.5V, V_{SS} = 0V, T_A = - 40°C to + 85°C)

Parameter	Symbol	Pin name	Conditions	Value		Unit	Remarks
				Min	Max		
TMS,TDI setup time	t_{JTAGS}	TCK, TMS,TDI	$V_{CC} \geq 4.5$ V	15	-	ns	
			$V_{CC} < 4.5$ V				
TMS,TDI hold time	t_{JTAGH}	TCK, TMS,TDI	$V_{CC} \geq 4.5$ V	15	-	ns	
			$V_{CC} < 4.5$ V				
TDO delay time	t_{JTAGD}	TCK, TDO	$V_{CC} \geq 4.5$ V	-	30	ns	
			2.7 V $\leq V_{CC} < 4.5$ V	-	45		
			$V_{CC} < 2.7$ V	-	60		

Note:

- *When the external load capacitance C_L = 50 pF.*

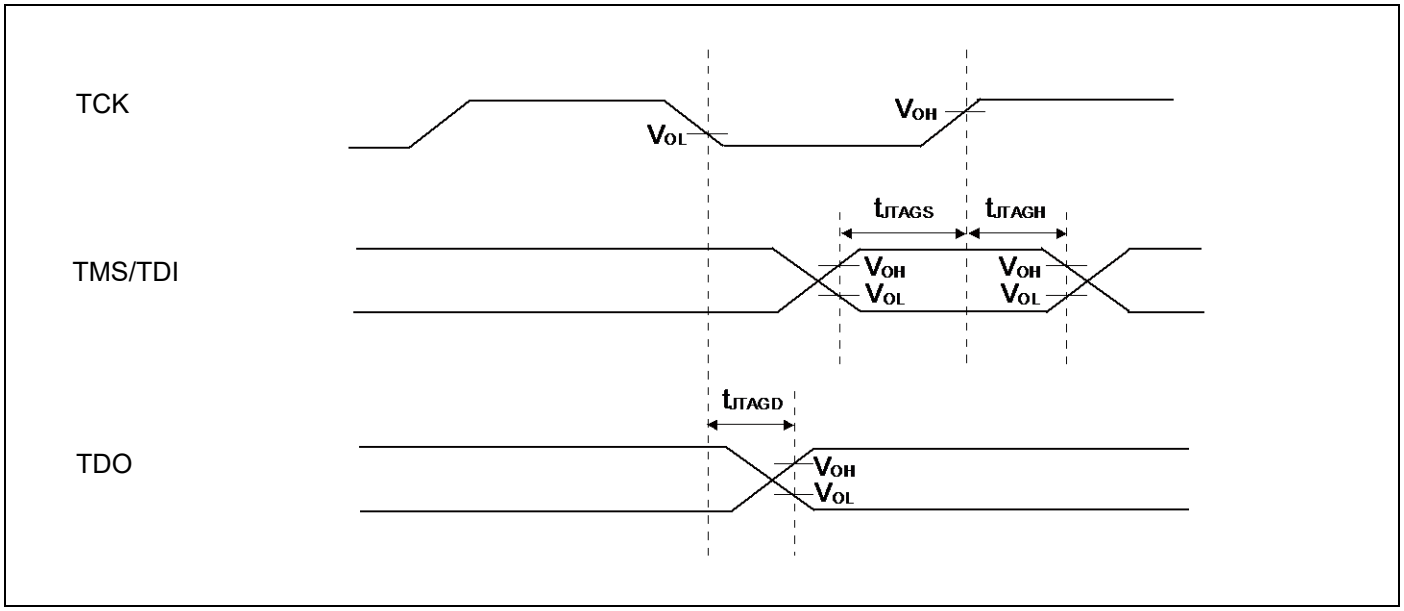

11.5 12-bit A/D Converter

Electrical Characteristics for the A/D Converter

(V_{CC} = AV_{CC} = 2.7V to 3.6V, V_{SS} = AV_{SS} = AVRL = 0V)

Parameter	Symbol	Pin name	Value			Unit	Remarks
			Min	Typ	Max		
Resolution	-	-	-	-	12	bit	
Integral Nonlinearity	INL	-	-	± 2.5	± 3.0	LSB	AV_{CC} ≥ 2.7 V
			-	± 3.5	± 4.0	LSB	AV_{CC} < 2.7 V
Differential Nonlinearity	DNL	-	-	± 1.8	± 1.9	LSB	AV_{CC} ≥ 2.7 V
			-	± 2.7	± 2.9	LSB	AV_{CC} < 2.7 V
Zero transition voltage	V_{ZT}	ANxx	-	± 9	± 20	mV	
Full-scale transition voltage	V_{FST}	ANxx	-	AVRH ± 9	AVRH ± 20	mV	
Conversion time*1	-	-	1.0	-	-	µs	AV_{CC} ≥ 2.7 V
			4.0				AV_{CC} < 2.7 V
Sampling time*2	t_S	-	0.3	-	10	µs	AV_{CC} ≥ 2.7 V
			1.2				AV_{CC} < 2.7 V
Compare clock cycle*3	t_{CCK}	-	50	-	1000	ns	AV_{CC} ≥ 2.7 V
			200				AV_{CC} < 2.7 V
Period of operation enable state transitions	t_{STT}	-	-	-	1	µs	
Analog input capacity	C_{AIN}	-	-	-	15	pF	
Analog input resistor	R_{AIN}	-	-	-	0.9	kΩ	AV_{CC} ≥ 4.5 V
					1.6		2.7 V ≤ AV_{CC} < 4.5 V
					4.0		AV_{CC} < 2.7 V
Interchannel disparity	-	-	-	-	4	LSB	
Analog port input leak current	-	ANxx	-	-	0.3	µA	
Analog input voltage	-	ANxx	AV_{SS}	-	AVRH	V	
Reference voltage	-	AVRH	2.7	-	AV_{CC}	V	AV_{CC} ≥ 2.7 V
			AV_{CC}				AV_{CC} < 2.7 V

*1: The conversion time is the value of sampling time (t_S) + compare time (t_C).

The condition of the minimum conversion time is the following.

AV_{CC} ≥ 2.7 V, HCLK=20 MHz sampling time: 0.3 µs, compare time: 0.7 µs

AV_{CC} < 2.7 V, HCLK=20 MHz sampling time: 1.2 µs, compare time: 2.8 µs

Ensure that it satisfies the value of the sampling time (t_S) and compare clock cycle (t_{CCK}).

For setting*4 of the sampling time and compare clock cycle, see Chapter 1-1: A/D Converter in FM3 Family Peripheral Manual Analog Macro Part.

The register settings of the A/D Converter are reflected in the operation according to the APB bus clock timing.

For the number of the APB bus to which the A/D Converter is connected, see Block Diagram.

The Base clock (HCLK) is used to generate the sampling time and the compare clock cycle.

*2: A necessary sampling time changes by external impedance.

Ensure to set the sampling time to satisfy (Equation 1).

*3: The compare time (t_C) is the value of (Equation 2).

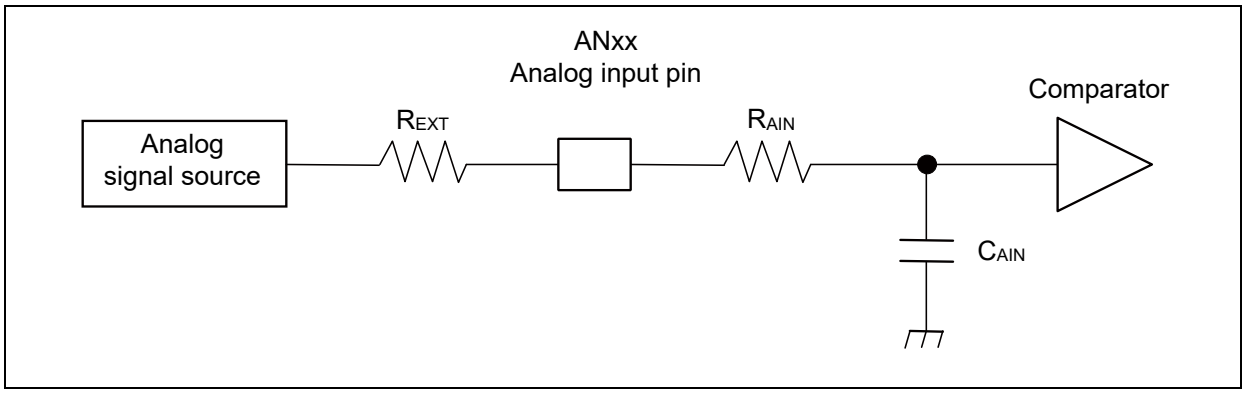

(Equation 1) $t_S \geq (R_{AIN} + R_{EXT}) \times C_{AIN} \times 9$

t_S: Sampling time

R_{AIN}: Input resistor of A/D = 0.9 kΩ at 4.5 V ≤ AV_{CC} ≤ 5.5 V
Input resistor of A/D = 1.6 kΩ at 2.7 V ≤ AV_{CC} < 4.5 V
Input resistor of A/D = 4.0 kΩ at 1.8 V ≤ AV_{CC} < 2.7 V

C_{AIN}: Input capacity of A/D = 15 pF at 1.8 V ≤ AV_{CC} ≤ 5.5 V

R_{EXT}: Output impedance of external circuit

(Equation 2) $t_C = t_{CCK} \times 14$

t_C: Compare time

t_{CCK}: Compare clock cycle

Definition of 12-bit A/D Converter Terms

- Resolution: Analog variation that is recognized by an A/D converter.
- Integral Nonlinearity: Deviation of the line between the zero-transition point (0b000000000000 ⟷ 0b000000000001) and the full-scale transition point (0b111111111110 ⟷ 0b111111111111) from the actual conversion characteristics.
- Differential Nonlinearity: Deviation from the ideal value of the input voltage that is required to change the output code by 1 LSB.

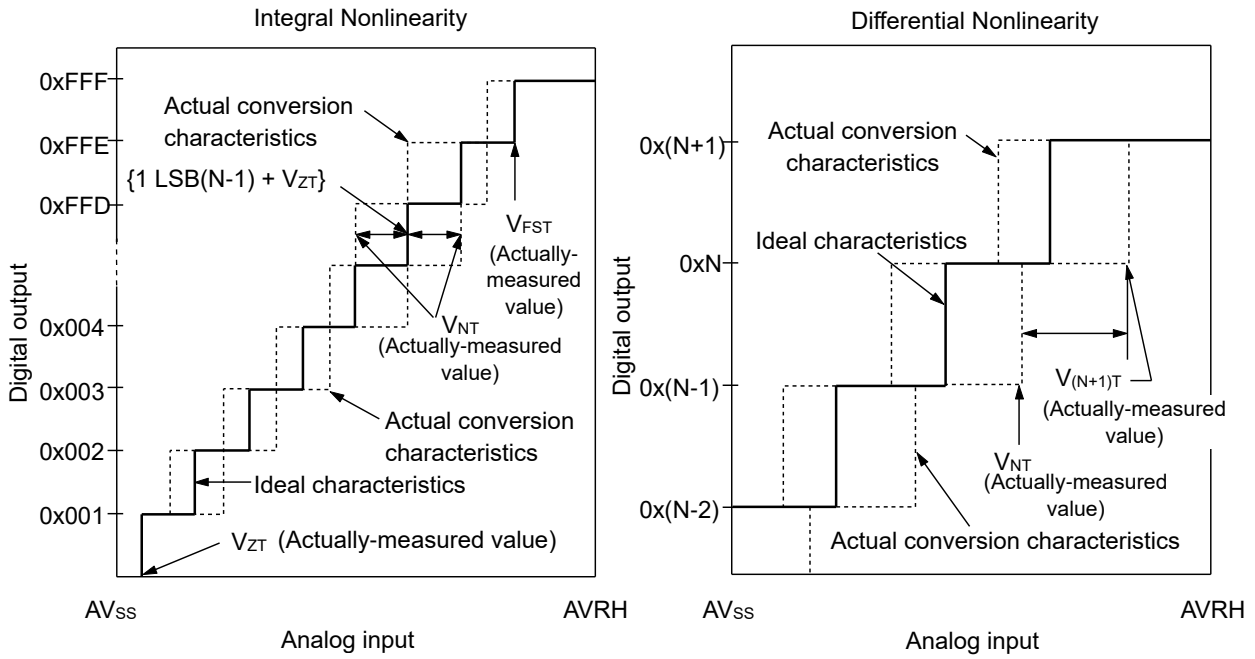

$$\text{Integral Nonlinearity of digital output N} = \frac{V_{NT} - \{1LSB \times (N - 1) + V_{ZT}\}}{1LSB} \text{ [LSB]}$$

$$\text{Differential Nonlinearity of digital output N} = \frac{V_{(N+1)T} - V_{NT}}{1LSB} - 1 \text{ [LSB]}$$

$$1LSB = \frac{V_{FST} - V_{ZT}}{4094}$$

N: A/D converter digital output value.
V_{ZT}: Voltage at which the digital output changes from 0x000 to 0x001.
V_{FST}: Voltage at which the digital output changes from 0xFFE to 0xFFF.
V_{NT}: Voltage at which the digital output changes from 0x(N − 1) to 0xN.

11.6 10-bit D/A Converter

Electrical Characteristics for the D/A Converter

(V_{CC} = AV_{CC} = 1.8V to 5.5V, V_{SS} = AV_{SS} = 0V, T_A = - 40°C to + 85°C)

Parameter	Symbol	Pin name	Value			Unit	Remarks
			Min	Typ	Max		
Resolution	-	DAx	-	-	10	bit	
Conversion time	t_{C20}		0.37	0.53	0.69	µs	Load 20 pF
	t_{C100}		1.87	2.67	3.47	µs	Load 100 pF
Integral Nonlinearity	INL		-4.0	-	+4.0	LSB	*
Differential Nonlinearity	DNL		-0.9	-	+0.9	LSB	*
Output Voltage offset	V_{OFF}		-	-	10.0	mV	Code is 0x000
			-50.0	-	+5.5	mV	Code is 0x3FF
Analog output impedance	R_O		2.45	3.50	4.55	kΩ	D/A operation
			5.0	9.0	-	MΩ	D/A stop
Output undefined period	t_R		-	-	250	ns	

*: No-load

11.7 Low-Voltage Detection Characteristics

11.7.1 Low-Voltage Detection Reset

(T_A = - 40°C to + 85°C)

Parameter	Symbol	Conditions	Value			Unit	Remarks
			Min	Typ	Max		
Detected voltage	V_{DLR}	SVHR = 0001	1.43	1.53	1.63	V	When voltage drops
Released voltage	V_{DHR}		1.53	1.63	1.73	V	When voltage rises
Detected voltage	V_{DLR}	SVHR = 0100	1.80	1.93	2.06	V	When voltage drops
Released voltage	V_{DHR}		1.90	2.03	2.16	V	When voltage rises
LVD stabilization wait time	t_{LVDRW}	-	-	-	633 × t_{CYCP}*	µs	
Detection delay time	t_{LVDRD}	dV/dt ≥ -4 mV/µs	-	-	60	µs	

*: t_{CYCP} indicates the APB2 bus clock cycle time.

11.7.2 Interrupt of Low-Voltage Detection

Normal Mode

(T_A = - 40°C to + 85°C)

Parameter	Symbol	Conditions	Value			Unit	Remarks
			Min	Typ	Max		
Detected voltage	V_{DLI}	SVHI = 0000	1.87	2.00	2.13	V	When voltage drops
Released voltage	V_{DHI}		1.97	2.10	2.23	V	When voltage rises
Detected voltage	V_{DLI}	SVHI = 0001	1.96	2.10	2.24	V	When voltage drops
Released voltage	V_{DHI}		2.06	2.20	2.34	V	When voltage rises
Detected voltage	V_{DLI}	SVHI = 0010	2.05	2.20	2.35	V	When voltage drops
Released voltage	V_{DHI}		2.15	2.30	2.45	V	When voltage rises
Detected voltage	V_{DLI}	SVHI = 0011	2.15	2.30	2.45	V	When voltage drops
Released voltage	V_{DHI}		2.25	2.40	2.55	V	When voltage rises
Detected voltage	V_{DLI}	SVHI = 0100	2.24	2.40	2.56	V	When voltage drops
Released voltage	V_{DHI}		2.34	2.50	2.66	V	When voltage rises
Detected voltage	V_{DLI}	SVHI = 0101	2.33	2.50	2.67	V	When voltage drops
Released voltage	V_{DHI}		2.43	2.60	2.77	V	When voltage rises
Detected voltage	V_{DLI}	SVHI = 0110	2.43	2.60	2.77	V	When voltage drops
Released voltage	V_{DHI}		2.53	2.70	2.87	V	When voltage rises
Detected voltage	V_{DLI}	SVHI = 0111	2.61	2.80	2.99	V	When voltage drops
Released voltage	V_{DHI}		2.71	2.90	3.09	V	When voltage rises
Detected voltage	V_{DLI}	SVHI = 1000	2.80	3.00	3.20	V	When voltage drops
Released voltage	V_{DHI}		2.90	3.10	3.30	V	When voltage rises
Detected voltage	V_{DLI}	SVHI = 1001	2.99	3.20	3.41	V	When voltage drops
Released voltage	V_{DHI}		3.09	3.30	3.51	V	When voltage rises
Detected voltage	V_{DLI}	SVHI = 1010	3.36	3.60	3.84	V	When voltage drops
Released voltage	V_{DHI}		3.46	3.70	3.94	V	When voltage rises
Detected voltage	V_{DLI}	SVHI = 1011	3.45	3.70	3.95	V	When voltage drops
Released voltage	V_{DHI}		3.55	3.80	4.05	V	When voltage rises
Detected voltage	V_{DLI}	SVHI = 1100	3.73	4.00	4.27	V	When voltage drops
Released voltage	V_{DHI}		3.83	4.10	4.37	V	When voltage rises
Detected voltage	V_{DLI}	SVHI = 1101	3.83	4.10	4.37	V	When voltage drops
Released voltage	V_{DHI}		3.93	4.20	4.47	V	When voltage rises
Detected voltage	V_{DLI}	SVHI = 1110	3.92	4.20	4.48	V	When voltage drops
Released voltage	V_{DHI}		4.02	4.30	4.58	V	When voltage rises
LVD stabilization wait time	t_{LVDIW}	-	-	-	633 × t_{CYCP}*	µs	
Detection delay time	t_{LVDID}	dV/dt ≥ - 4mV/µs	-	-	60	µs	

*: t_{CYCP} indicates the APB2 bus clock cycle time.

Low power mode

(T_A = - 40°C to + 85°C)

Parameter	Symbol	Conditions	Value			Unit	Remarks
			Min	Typ	Max		
Detected voltage	V_{DLIL}	SVHI = 0000	1.80	2.00	2.20	V	When voltage drops
Released voltage	V_{DHIL}		1.90	2.10	2.30	V	When voltage rises
Detected voltage	V_{DLIL}	SVHI = 0001	1.89	2.10	2.31	V	When voltage drops
Released voltage	V_{DHIL}		1.99	2.20	2.41	V	When voltage rises
Detected voltage	V_{DLIL}	SVHI = 0010	1.98	2.20	2.42	V	When voltage drops
Released voltage	V_{DHIL}		2.08	2.30	2.52	V	When voltage rises
Detected voltage	V_{DLIL}	SVHI = 0011	2.07	2.30	2.53	V	When voltage drops
Released voltage	V_{DHIL}		2.17	2.40	2.63	V	When voltage rises
Detected voltage	V_{DLIL}	SVHI = 0100	2.16	2.40	2.64	V	When voltage drops
Released voltage	V_{DHIL}		2.26	2.50	2.74	V	When voltage rises
Detected voltage	V_{DLIL}	SVHI = 0101	2.25	2.50	2.75	V	When voltage drops
Released voltage	V_{DHIL}		2.35	2.60	2.85	V	When voltage rises
Detected voltage	V_{DLIL}	SVHI = 0110	2.34	2.60	2.86	V	When voltage drops
Released voltage	V_{DHIL}		2.44	2.70	2.96	V	When voltage rises
Detected voltage	V_{DLIL}	SVHI = 0111	2.52	2.80	3.08	V	When voltage drops
Released voltage	V_{DHIL}		2.62	2.90	3.18	V	When voltage rises
Detected voltage	V_{DLIL}	SVHI = 1000	2.70	3.00	3.30	V	When voltage drops
Released voltage	V_{DHIL}		2.80	3.10	3.40	V	When voltage rises
Detected voltage	V_{DLIL}	SVHI = 1001	2.88	3.20	3.52	V	When voltage drops
Released voltage	V_{DHIL}		2.98	3.30	3.62	V	When voltage rises
Detected voltage	V_{DLIL}	SVHI = 1010	3.24	3.60	3.96	V	When voltage drops
Released voltage	V_{DHIL}		3.34	3.70	4.06	V	When voltage rises
Detected voltage	V_{DLIL}	SVHI = 1011	3.33	3.70	4.07	V	When voltage drops
Released voltage	V_{DHIL}		3.43	3.80	4.17	V	When voltage rises
Detected voltage	V_{DLIL}	SVHI = 1100	3.60	4.00	4.40	V	When voltage drops
Released voltage	V_{DHIL}		3.70	4.10	4.50	V	When voltage rises
Detected voltage	V_{DLIL}	SVHI = 1101	3.69	4.10	4.51	V	When voltage drops
Released voltage	V_{DHIL}		3.79	4.20	4.61	V	When voltage rises
Detected voltage	V_{DLIL}	SVHI = 1110	3.78	4.20	4.62	V	When voltage drops
Released voltage	V_{DHIL}		3.88	4.30	4.72	V	When voltage rises
LVD stabilization wait time	t_{LVDILW}	-	-	-	8039 × t_{CYCP}*	µs	
Detection delay time	t_{LVDILD}	dV/dt ≥ - 0.4 mV/µs	-	-	800	µs	

*: t_{CYCP} indicates the APB2 bus clock cycle time.

11.8 Flash Memory Write/Erase Characteristics

Write / Erase time

(V_{CC} = 2.0V to 5.5V, T_A = - 40°C to + 85°C)

Parameter		Value		Unit	Remarks
		Typ*	Max*		
Sector erase time	Large Sector	1.6	7.5	s	Includes write time prior to internal erase
	Small Sector	0.4	2.1		
Half word (16-bit) write time		25	400	µs	Not including system-level overhead time.
Chip erase time		4	19.2	s	Includes write time prior to internal erase

*: The typical value is immediately after shipment, the maximam value is guarantee value under 100,000 cycle of erase/write.

Write cycles and data hold time

Erase/write cycles (cycle)	Data hold time (year)	Remarks
1,000	20 *	
10,000	10 *	
100,000	5*	

*: At average + 85°C

11.9 Return Time from Low-Power Consumption Mode

11.9.1 Return Factor: Interrupt/WKUP

The return time from Low-Power consumption mode is indicated as follows. It is from receiving the return factor to starting the program operation.

Return Count Time

(V_{CC} = 1.65V to 3.6V, V_{SS} = 0V, T_A = - 40°C to + 85°C)

Parameter	Symbol	Value		Unit	Remarks
		Typ	Max*		
Sleep mode	t_{ICNT}	t_{CYCC}		µs	
High-speed CR Timer mode, Main Timer mode, PLL Timer mode		40	80	µs	
Low-speed CR Timer mode		630	1260	µs	
Sub Timer mode		630	1260	µs	
RTC mode, Stop mode		1083	2100	µs	
Deep Standby RTC mode Deep Standby Stop mode		1099	2127	µs	

*: The maximum value depends on the accuracy of built-in CR.

Operation example of return from Low-Power consumption mode (by external interrupt*)

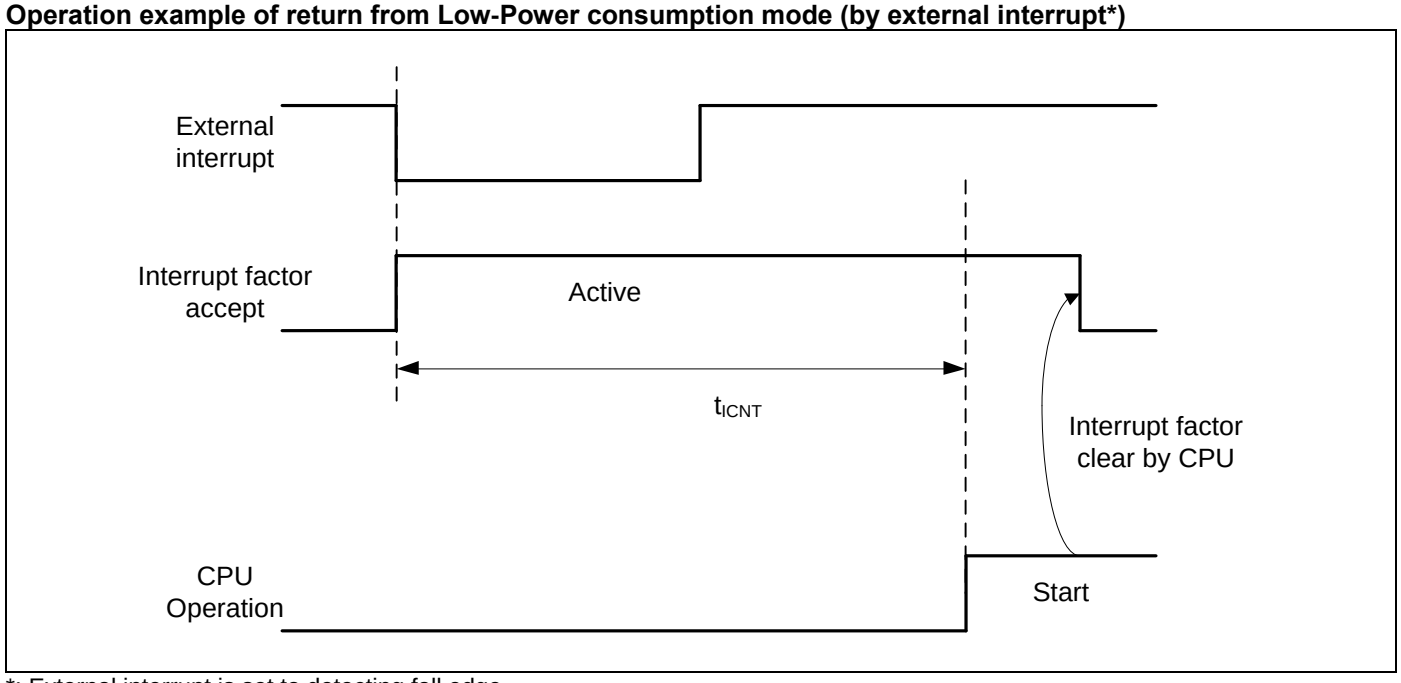

*: External interrupt is set to detecting fall edge.

Operation example of return from Low-Power consumption mode (by internal resource interrupt*)

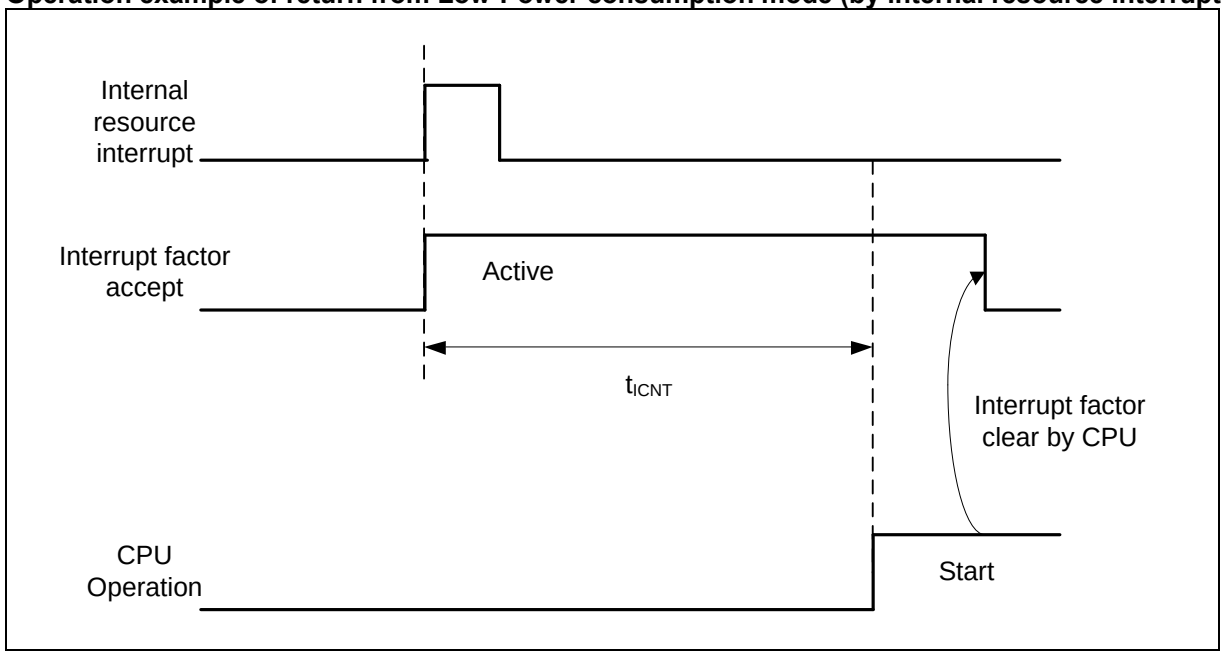

*: Internal resource interrupt is not included in return factor by the kind of Low-Power consumption mode.

Notes:

- *The return factor is different in each Low-Power consumption modes. See Chapter 6: Low Power Consumption Mode and Operations of Standby Modes in FM3 Family Peripheral Manual.*
- *When interrupt recoveries, the operation mode that CPU recoveries depend on the state before the Low-Power consumption mode transition. See Chapter 6: Low Power Consumption Mode in FM3 Family Peripheral Manual.*

11.9.2 Return Factor: Reset

The return time from Low-Power consumption mode is indicated as follows. It is from releasing reset to starting the program operation.

Return Count Time

(V_{CC} = 1.65V to 3.6V, V_{SS} = 0V, T_A = - 40°C to + 85°C)

Parameter	Symbol	Value		Unit	Remarks
		Typ	Max*		
Sleep mode	t_{RCNT}	359	647	µs	
High-speed CR Timer mode, Main Timer mode, PLL Timer mode		359	647	µs	
Low-speed CR Timer mode		929	1787	µs	
Sub Timer mode		929	1787	µs	
RTC/Stop mode		1099	2127	µs	
Deep Standby RTC mode Deep Standby Stop mode		1099	2127	µs	

*: The maximum value depends on the accuracy of built-in CR.

Operation example of return from Low-Power consumption mode (by INITX)

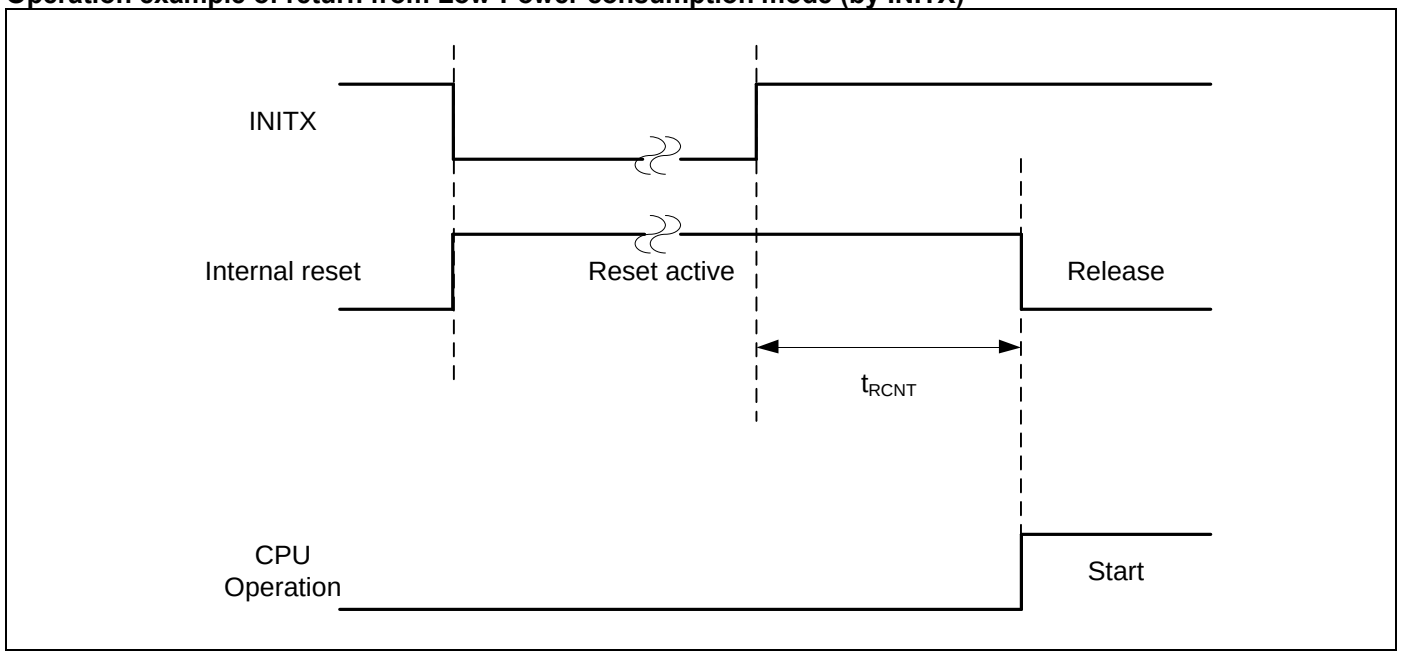

Operation example of return from low power consumption mode (by internal resource reset*)

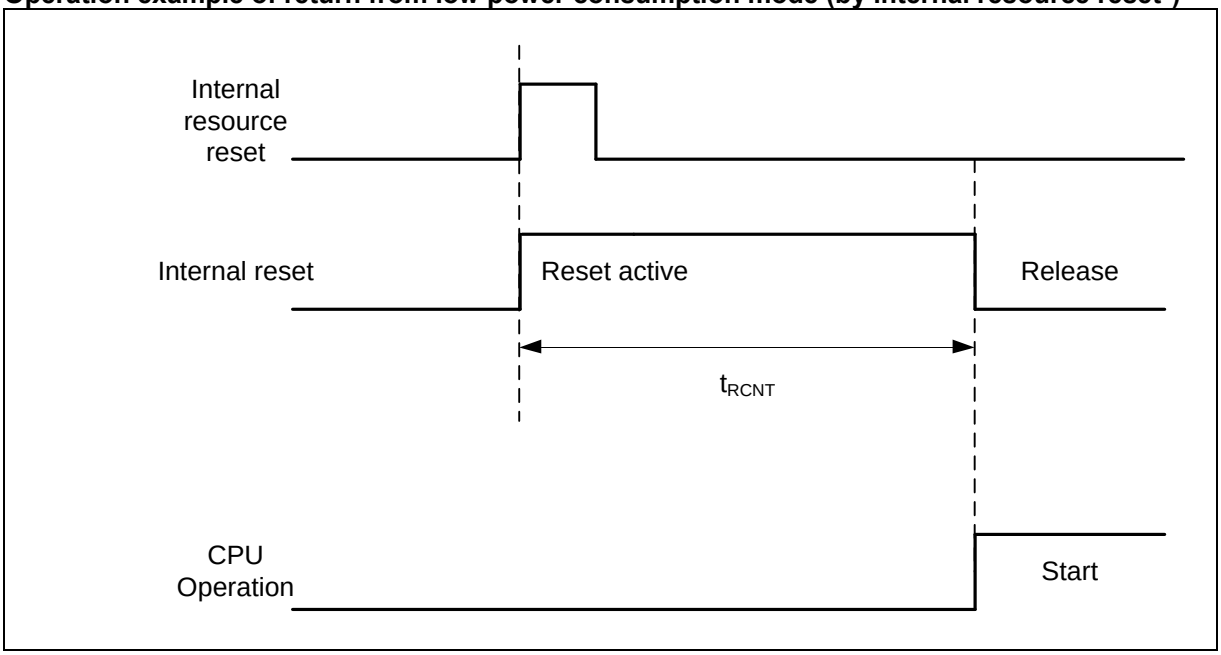

*: Internal resource reset is not included in return factor by the kind of Low-Power consumption mode.

Notes:

- *The return factor is different in each Low-Power consumption modes. See Chapter 6: Low Power Consumption Mode and Operations of Standby Modes in FM3 Family Peripheral Manual.*
- *When interrupt recoveries, the operation mode that CPU recoveries depend on the state before the Low-Power consumption mode transition. See Chapter 6: Low Power Consumption Mode in FM3 Family Peripheral Manual.*
- *The time during the power-on reset/low-voltage detection reset is excluded. See (6) Power-on Reset Timing in 4. AC Characteristics in Electrical Characteristics for the detail on the time during the power-on reset/low-voltage detection reset.*
- *When in recovery from reset, CPU changes to the High-speed CR Run mode. When using the main clock or the PLL clock, it is necessary to add the main clock oscillation stabilization wait time or the Main PLL clock stabilization wait time.*
- *The internal resource reset means the watchdog reset and the CSV reset.*

12. Ordering Information

Part number	On-chip Flash memory	On-chip SRAM	Package	Packing
CY9AF131MPMC-G-SNE2	64 Kbyte	12 Kbyte	Plastic • LQFP (0.5 mm pitch), 80-pin (LQH080)	Tray
CY9AF132MPMC-G-SNE2	128 Kbyte	16 Kbyte		
CY9AF131MPMC1-G-SNE2	64 Kbyte	12 Kbyte	Plastic • LQFP (0.65 mm pitch), 80-pin (LQJ080)	
CY9AF132MPMC1-G-SNE2	128 Kbyte	16 Kbyte		
CY9AF131NPMC-G-SNE2	64 Kbyte	12 Kbyte	Plastic • LQFP (0.5 mm pitch), 100-pin (LQI100)	
CY9AF132NPMC-G-SNE2	128 Kbyte	16 Kbyte		
CY9AF131NPF-G-SNE1	64 Kbyte	12 Kbyte	Plastic • QFP (0.65 mm pitch), 100-pin (PQH100)	
CY9AF132NPF-G-SNE1	128 Kbyte	16 Kbyte		

13. Package Dimensions

Package Type	Package Code
LQFP 80 (0.5mm pitch)	LQH080

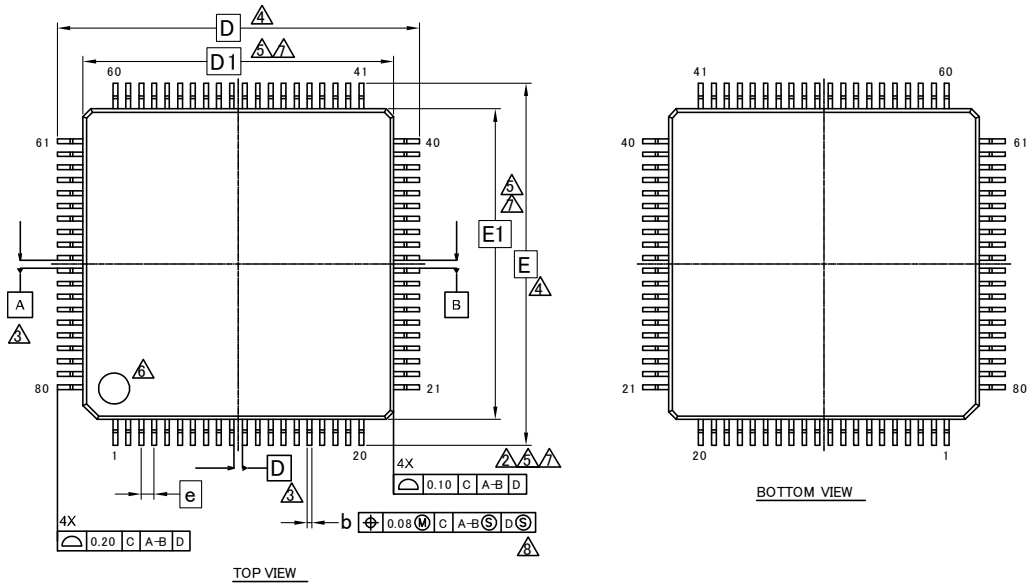

SYMBOL	DIMENSIONS		
	MIN.	NOM.	MAX.
A	——	——	1.70
A1	0.05	——	0.15
b	0.15	——	0.27
c	0.09	——	0.20
D	14.00 BSC.		
D1	12.00 BSC.		
e	0.50 BSC		
E	14.00 BSC.		
E1	12.00 BSC.		
L	0.45	0.60	0.75
L1	0.30	0.50	0.70

NOTES

1. CONTROLLING DIMENSIONS ARE IN MILLIMETERS (mm)
2. DATUM PLANE H IS LOCATED AT THE BOTTOM OF THE MOLD PARTING LINE COINCIDENT WITH WHERE THE LEAD EXITS THE BODY.
3. DATUMS A-B AND D TO BE DETERMINED AT DATUM PLANE H.
4. TO BE DETERMINED AT SEATING PLANE C.
5. DIMENSIONS D1 AND E1 DO NOT INCLUDE MOLD PROTRUSION. ALLOWABLE PROTRUSION IS 0.25mm PRE SIDE. DIMENSIONS D1 AND E1 INCLUDE MOLD MISMATCH AND ARE DETERMINED AT DATUM PLANE H.
6. DETAILS OF PIN 1 IDENTIFIER ARE OPTIONAL BUT MUST BE LOCATED WITHIN THE ZONE INDICATED.
7. REGARDLESS OF THE RELATIVE SIZE OF THE UPPER AND LOWER BODY SECTIONS. DIMENSIONS D1 AND E1 ARE DETERMINED AT THE LARGEST FEATURE OF THE BODY EXCLUSIVE OF MOLD FLASH AND GATE BURRS. BUT INCLUDING ANY MISMATCH BETWEEN THE UPPER AND LOWER SECTIONS OF THE MOLDER BODY.
8. DIMENSION b DOES NOT INCLUDE DAMBER PROTRUSION. THE DAMBAR PROTRUSION (S) SHALL NOT CAUSE THE LEAD WIDTH TO EXCEED b MAXIMUM BY MORE THAN 0.08mm. DAMBAR CANNOT BE LOCATED ON THE LOWER RADIUS OR THE LEAD FOOT.
9. THESE DIMENSIONS APPLY TO THE FLAT SECTION OF THE LEAD BETWEEN 0.10mm AND 0.25mm FROM THE LEAD TIP.
10. A1 IS DEFINED AS THE DISTANCE FROM THE SEATING PLANE TO THE LOWEST POINT OF THE PACKAGE BODY.

PACKAGE OUTLINE, 80 LEAD LQFP
12.0X12.0X1.7 MM LQH080 Rev **

002-11501 **

Package Type	Package Code
LQFP 80 (0.65mm pitch)	LQJ080

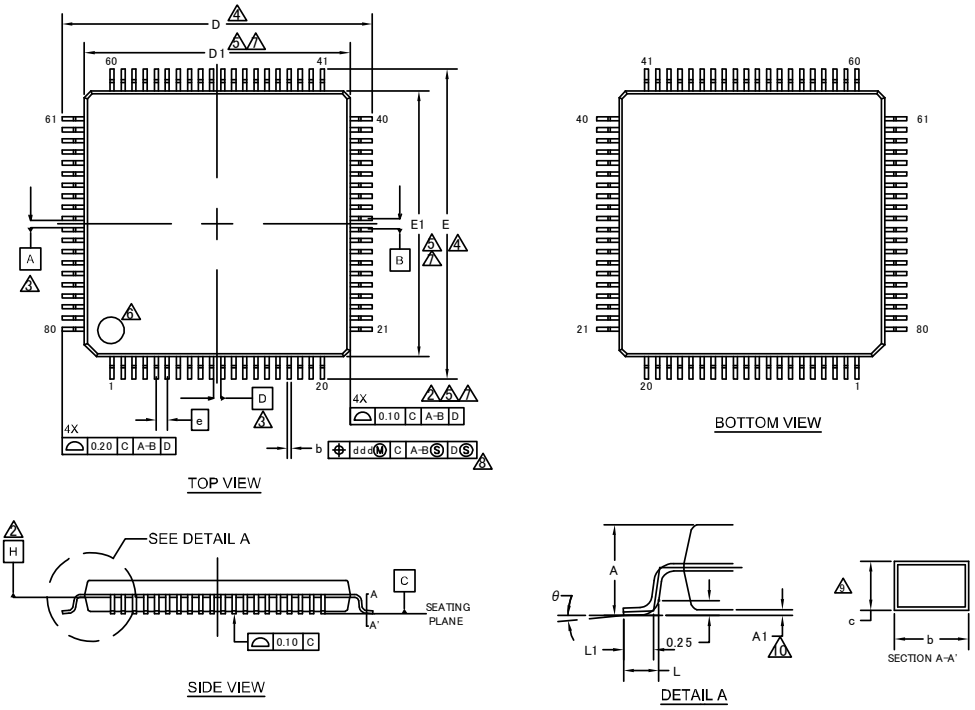

SYMBOL	DIMENSIONS		
	MIN.	NOM.	MAX.
A	——	——	1.70
A1	0.00	——	0.20
b	0.16	0.32	0.38
c	0.09	——	0.20
D	16.00 BSC		
D1	14.00 BSC		
e	0.65 BSC		
E	16.00 BSC		
E1	14.00 BSC		
L	0.45	0.60	0.75
L1	0.30	0.50	0.70
θ	0°	—	8°

NOTES

1. ALL DIMENSIONS ARE IN MILLIMETERS.
2. DATUM PLANE H IS LOCATED AT THE BOTTOM OF THE MOLD PARTING LINE COINCIDENT WITH WHERE THE LEAD EXITS THE BODY.
3. DATUMS A-B AND D TO BE DETERMINED AT DATUM PLANE H.
4. TO BE DETERMINED AT SEATING PLANE C.
5. DIMENSIONS D1 AND E1 DO NOT INCLUDE MOLD PROTRUSION. ALLOWABLE PROTRUSION IS 0.25mm PRE SIDE. DIMENSIONS D1 AND E1 INCLUDE MOLD MISMATCH AND ARE DETERMINED AT DATUM PLANE H.
6. DETAILS OF PIN 1 IDENTIFIER ARE OPTIONAL BUT MUST BE LOCATED WITHIN THE ZONE INDICATED.
7. REGARDLESS OF THE RELATIVE SIZE OF THE UPPER AND LOWER BODY SECTIONS. DIMENSIONS D1 AND E1 ARE DETERMINED AT THE LARGEST FEATURE OF THE BODY EXCLUSIVE OF MOLD FLASH AND GATE BURRS. BUT INCLUDING ANY MISMATCH BETWEEN THE UPPER AND LOWER SECTIONS OF THE MOLDER BODY.
8. DIMENSION b DOES NOT INCLUDE DAMBER PROTRUSION. THE DAMBAR PROTRUSION (S) SHALL NOT CAUSE THE LEAD WIDTH TO EXCEED b MAXIMUM BY MORE THAN 0.08mm. DAMBAR CANNOT BE LOCATED ON THE LOWER RADIUS OR THE LEAD FOOT.
9. THESE DIMENSIONS APPLY TO THE FLAT SECTION OF THE LEAD BETWEEN 0.10mm AND 0.25mm FROM THE LEAD TIP.
10. A1 IS DEFINED AS THE DISTANCE FROM THE SEATING PLANE TO THE LOWEST POINT OF THE PACKAGE BODY.

002-14043 **

PACKAGE OUTLINE, 80 LEAD LQFP
14.0X14.0X1.7 MM LQJ080 REV**

Package Type	Package Code
LQFP 100	LQI100

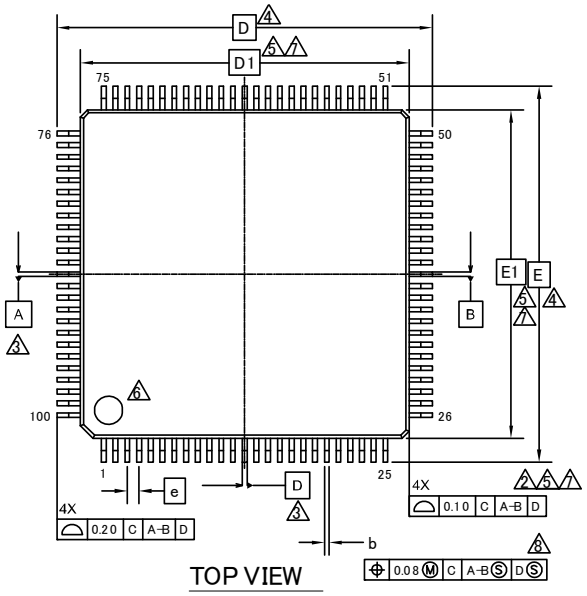

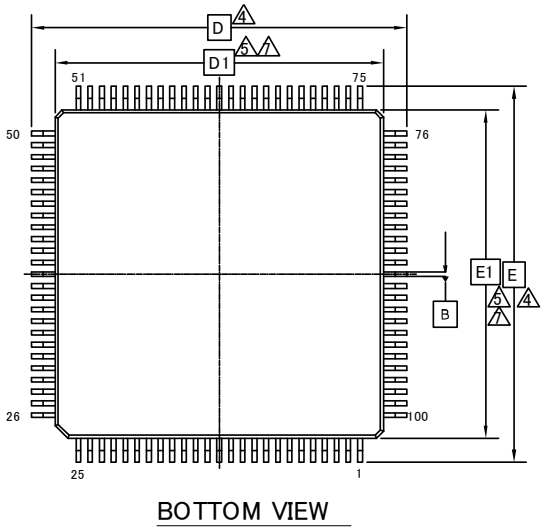

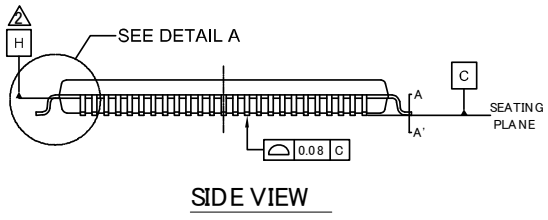

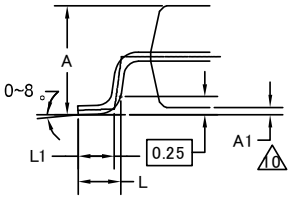

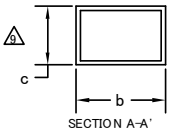

SYMBOL	DIMENSIONS		
	MIN.	NOM.	MAX.
A	—	—	1.70
A1	0.05	—	0.15
b	0.15	—	0.27
c	0.09	—	0.20
D	16.00 BSC		
D1	14.00 BSC		
e	0.50 BSC		
E	16.00 BSC		
E1	14.00 BSC		
L	0.45	0.60	0.75
L1	0.30	0.50	0.70

NOTES:

1. ALL DIMENSIONS ARE IN MILLIMETERS.
2. DATUM PLANE H IS LOCATED AT THE BOTTOM OF THE MOLD PARTING LINE COINCIDENT WITH WHERE THE LEAD EXITS THE BODY.
3. DATUMS A-B AND D TO BE DETERMINED AT DATUM PLANE H.
4. TO BE DETERMINED AT SEATING PLANE C.
5. DIMENSIONS D1 AND E1 DO NOT INCLUDE MOLD PROTRUSION. ALLOWABLE PROTRUSION IS 0.25mm PRE SIDE. DIMENSIONS D1 AND E1 INCLUDE MOLD MISMATCH AND ARE DETERMINED AT DATUM PLANE H.
6. DETAILS OF PIN 1 IDENTIFIER ARE OPTIONAL BUT MUST BE LOCATED WITHIN THE ZONE INDICATED.
7. REGARDLESS OF THE RELATIVE SIZE OF THE UPPER AND LOWER BODY SECTIONS. DIMENSIONS D1 AND E1 ARE DETERMINED AT THE LARGEST FEATURE OF THE BODY EXCLUSIVE OF MOLD FLASH AND GATE BURRS. BUT INCLUDING ANY MISMATCH BETWEEN THE UPPER AND LOWER SECTIONS OF THE MOLDER BODY.
8. DIMENSION b DOES NOT INCLUDE DAMBAR PROTRUSION. THE DAMBAR PROTRUSION (S) SHALL NOT CAUSE THE LEAD WIDTH TO EXCEED b MAXIMUM BY MORE THAN 0.08mm. DAMBAR CANNOT BE LOCATED ON THE LOWER RADIUS OR THE LEAD FOOT.
9. THESE DIMENSIONS APPLY TO THE FLAT SECTION OF THE LEAD BETWEEN 0.10mm AND 0.25mm FROM THE LEAD TIP.
10. A1 IS DEFINED AS THE DISTANCE FROM THE SEATING PLANE TO THE LOWEST POINT OF THE PACKAGE BODY.

002-11500 *A

PACKAGE OUTLINE, 100 LEAD LQFP
14.0X14.0X1.7 MM LQI100 REV*A

Package Type	Package Code
QFP 100	PQH100

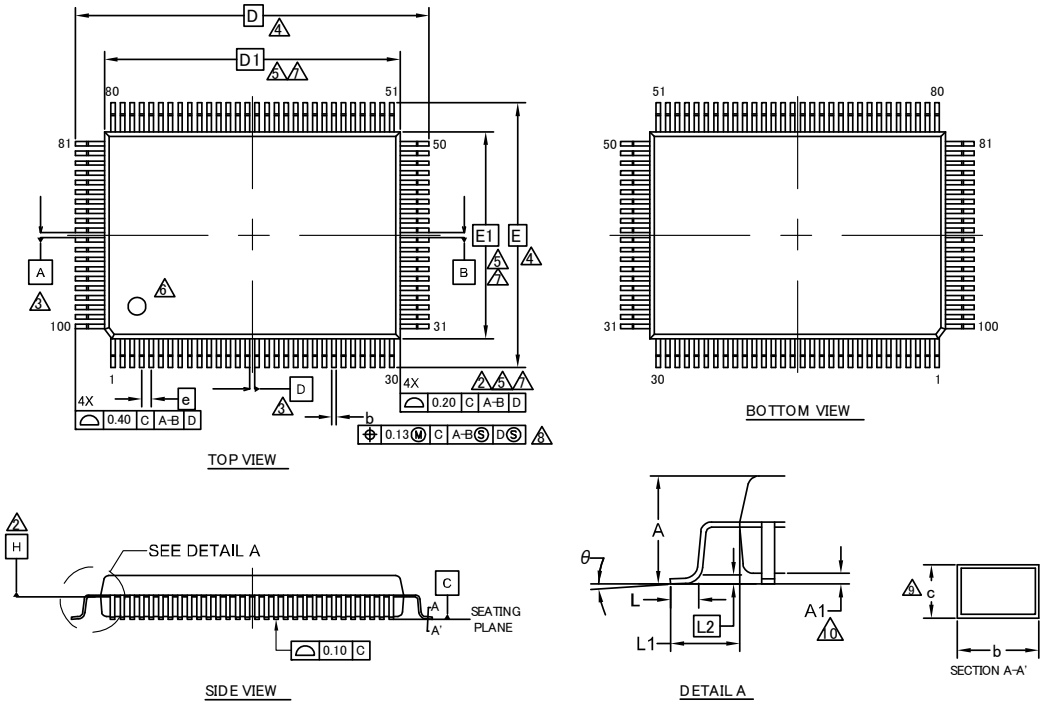

SYMBOL	DIMENSIONS		
	MIN.	NOM.	MAX.
A	—	—	3.35
A1	0.05	—	0.45
b	0.27	0.32	0.37
c	0.11	—	0.23
D	23.90 BSC		
D1	20.00 BSC		
e	0.65 BSC		
E	17.90 BSC		
E1	14.00 BSC		
θ	0°	—	8°
L	0.73	0.88	1.03
L1	1.95 REF		
L2	0.25 BSC		

NOTES

1. ALL DIMENSIONS ARE IN MILLIMETERS.
2. DATUM PLANE H IS LOCATED AT THE BOTTOM OF THE MOLD PARTING LINE COINCIDENT WITH WHERE THE LEAD EXITS THE BODY.
3. DATUMS A-B AND D TO BE DETERMINED AT DATUM PLANE H.
4. TO BE DETERMINED AT SEATING PLANE C.
5. DIMENSIONS D1 AND E1 DO NOT INCLUDE MOLD PROTRUSION. ALLOWABLE PROTRUSION IS 0.25mm PRE SIDE. DIMENSIONS D1 AND E1 INCLUDE MOLD MISMATCH AND ARE DETERMINED AT DATUM PLANE H.
6. DETAILS OF PIN 1 IDENTIFIER ARE OPTIONAL BUT MUST BE LOCATED WITHIN THE ZONE INDICATED.
7. REGARDLESS OF THE RELATIVE SIZE OF THE UPPER AND LOWER BODY SECTIONS. DIMENSIONS D1 AND E1 ARE DETERMINED AT THE LARGEST FEATURE OF THE BODY EXCLUSIVE OF MOLD FLASH AND GATE BURRS. BUT INCLUDING ANY MISMATCH BETWEEN THE UPPER AND LOWER SECTIONS OF THE MOLDER BODY.
8. DIMENSION b DOES NOT INCLUDE DAMBER PROTRUSION. THE DAMBAR PROTRUSION (S) SHALL NOT CAUSE THE LEAD WIDTH TO EXCEED b MAXIMUM BY MORE THAN 0.08mm. DAMBAR CANNOT BE LOCATED ON THE LOWER RADIUS OR THE LEAD FOOT.
9. THESE DIMENSIONS APPLY TO THE FLAT SECTION OF THE LEAD BETWEEN 0.10mm AND 0.25mm FROM THE LEAD TIP.
10. A1 IS DEFINED AS THE DISTANCE FROM THE SEATING PLANE TO THE LOWEST POINT OF THE PACKAGE BODY.

002-15156 **

PACKAGE OUTLINE, 100 LEAD QFP
20.00X14.00X3.35 MM PQH100 REV**

14. Major Changes

Spansion Publication Number: DS706-00042

Page	Section	Change Results
Revision 3.0		
15	■LIST OF PIN FUNCTIONS • List of pin numbers	Revised the Pin state type.
22	• List of pin functions	Revised the pin name of "External Interrupt". INIT15_1 → INT15_1
41	■BLOCK DIAGRAM	Revised the description of "Multi-Function Serial IF".
52, 53	■PIN STATUS IN EACH CPU STATE • List of pin status	• Added "S" and "T" type to the Pin status type. • Added the footnote.
Revision 3.1		
-	-	Company name and layout design change
Revision 4.0		
2	■Features · On-chip Memories	Changed the description of on-chip SRAM
7 - 29	■Packages ■Pin Assignment ■List of Pin Functions	Deleted BGA package
38	■Handling Devices	Added "· Stabilizing power supply voltage"
38	■Handling Devices ●Crystal oscillator circuit	Added the following description "Evaluate oscillation of your using crystal oscillator by your mount board."
40	■Block Diagram	Modified the block diagram
42	■Memory Map · Memory map(2)	Added the summary of Flash memory sector and the note
55 - 57	■Electrical Characteristics 3. DC Characteristics (1) Current rating	· Changed the table format · Added Main Timer mode current · Added Flash Memory Current · Moved A/D Converter Current · Moved D/A Converter Current
58	■Electrical Characteristics 3. DC Characteristics (2) Pin Characteristics	Added the input leak current of CEC port at power off
61	■Electrical Characteristics 4. AC Characteristics (4-1) Operating Conditions of Main PLL (4-2) Operating Conditions of Main PLL	· Added the figure of Main PLL connection
62	■Electrical Characteristics 4. AC Characteristics (6) Power-on Reset Timing	· Changed the figure of timing · Changed from Reset release delay time(t_{OND}) to Time until releasing Power-on reset(t_{PRT})
64 - 71	■Electrical Characteristics 4. AC Characteristics (8) CSIO/UART Timing	· Modified from UART Timing to CSIO/UART Timing · Changed from Internal shift clock operation to Master mode · Changed from External shift clock operation to Slave mode
75	■Electrical Characteristics 5. 12bit A/D Converter	· Added the typical value of Integral Nonlinearity, Differential Nonlinearity, Zero transition voltage and Full-scale transition voltage · Added Conversion time at AV_{CC} < 2.7 V · Changed from Non linearity error to Integral Nonlinearity · Changed from Differential linearity error to Differential Nonlinearity
78	■Electrical Characteristics 6. 10bit D/A Converter	· Changed from Non linearity error to Integral Nonlinearity · Changed from Differential linearity error to Differential Nonlinearity

Page	Section	Change Results
79	■Electrical Characteristics 7. Low-voltage Detection Characteristics	Deleted the figure
82	■Electrical Characteristics 8. Flash Memory Write/Erase Characteristics	Change to the erase time of include write time prior to internal erase
83 - 86	■Electrical Characteristics 9. Return Time from Low-Power Consumption Mode	Added Return Time from Low-Power Consumption Mode
87	■Ordering Information	Changed notation of part number
88	■Package Dimensions	Deleted BGA-112P-M04

NOTE: Please see “Document History” about later revised information.

Document History

Document Title: CY9A130N Series 32-bit ARM® Cortex®-M3 based FM3 Microcontroller

Document Number: 002-05644

Revision	ECN	Orig. of Change	Submission Date	Description of Change
**	-	AKIH	06/19/2015	Migrated to Cypress and assigned document number 002-05644. No change to document contents.
*A	5135521	AKIH	03/10/2016	Updated to Cypress template.
*B	5531476	NNAK	06/06/2017	Deleted the following package in Package Dimensions. LCC-64P-M24 Modified RTC description in “Features, Real-Time Clock(RTC)”. Changed starting count value from 01 to 00. Deleted “second, or day of the week” in the Interrupt function. Changed package code as the following in chapter : 2. Packages 3. Pin Assignment 12. Ordering Information 13. Package Dimensions. FPT-80P-M37 -> LQH080, FPT-80P-M40 -> LQJ080, FPT-100P-M23 -> LQI100, FPT-100P-M06 -> PQH100 Replaced “J-TAG” with “JTAG" in 4. List of Pin Functions. Added Note for JTAG pin in 4. List of Pin Functions. Added the Baud rate spec in 11.4.9 CSIO/UART Timing. Updated to new template.
*C	6575932	XITO	05/17/2019	Updated Document Title to read as “CY9A130N Series 32-bit ARM® Cortex®-M3 based FM3 Microcontroller”. Replaced “MB9A130N Series” with “CY9A130N Series” in all instances across the document. Updated Ordering Information: Updated part numbers. Updated to new template. Completing Sunset Review.

Sales, Solutions, and Legal Information

Worldwide Sales and Design Support

Cypress maintains a worldwide network of offices, solution centers, manufacturer's representatives, and distributors. To find the office closest to you, visit us at Cypress Locations.

Products

ARM® Cortex® Microcontrollers	cypress.com/arm
Automotive	cypress.com/automotive
Clocks & Buffers	cypress.com/clocks
Interface	cypress.com/interface
Internet of Things	cypress.com/iot
Memory	cypress.com/memory
Microcontrollers	cypress.com/mcu
PSoC	cypress.com/psoc
Power Management ICs	cypress.com/pmic
Touch Sensing	cypress.com/touch
USB Controllers	cypress.com/usb
Wireless/RF	cypress.com/wireless

PSoC® Solutions

PSoC 1 | PSoC 3 | PSoC 4 | PSoC 5LP | PSoC 6 MCU

Cypress Developer Community

Forums | WICED IOT Forums | Projects | Video | Blogs | Training | Components

Technical Support

cypress.com/support

ARM and Cortex are the registered trademarks of ARM Limited in the EU and other countries. All other trademarks or registered trademarks referenced herein are the property of their respective owners.

© Cypress Semiconductor Corporation, 2012-2019. This document is the property of Cypress Semiconductor Corporation and its subsidiaries ("Cypress"). This document, including any software or firmware included or referenced in this document ("Software"), is owned by Cypress under the intellectual property laws and treaties of the United States and other countries worldwide. Cypress reserves all rights under such laws and treaties and does not, except as specifically stated in this paragraph, grant any license under its patents, copyrights, trademarks, or other intellectual property rights. If the Software is not accompanied by a license agreement and you do not otherwise have a written agreement with Cypress governing the use of the Software, then Cypress hereby grants you a personal, non-exclusive, nontransferable license (without the right to sublicense) (1) under its copyright rights in the Software (a) for Software provided in source code form, to modify and reproduce the Software solely for use with Cypress hardware products, only internally within your organization, and (b) to distribute the Software in binary code form externally to end users (either directly or indirectly through resellers and distributors), solely for use on Cypress hardware product units, and (2) under those claims of Cypress's patents that are infringed by the Software (as provided by Cypress, unmodified) to make, use, distribute, and import the Software solely for use with Cypress hardware products. Any other use, reproduction, modification, translation, or compilation of the Software is prohibited.

TO THE EXTENT PERMITTED BY APPLICABLE LAW, CYPRESS MAKES NO WARRANTY OF ANY KIND, EXPRESS OR IMPLIED, WITH REGARD TO THIS DOCUMENT OR ANY SOFTWARE OR ACCOMPANYING HARDWARE, INCLUDING, BUT NOT LIMITED TO, THE IMPLIED WARRANTIES OF MERCHANTABILITY AND FITNESS FOR A PARTICULAR PURPOSE. No computing device can be absolutely secure. Therefore, despite security measures implemented in Cypress hardware or software products, Cypress shall have no liability arising out of any security breach, such as unauthorized access to or use of a Cypress product. CYPRESS DOES NOT REPRESENT, WARRANT, OR GUARANTEE THAT CYPRESS PRODUCTS, OR SYSTEMS CREATED USING CYPRESS PRODUCTS, WILL BE FREE FROM CORRUPTION, ATTACK, VIRUSES, INTERFERENCE, HACKING, DATA LOSS OR THEFT, OR OTHER SECURITY INTRUSION (collectively, "Security Breach"). Cypress disclaims any liability relating to any Security Breach, and you shall and hereby do release Cypress from any claim, damage, or other liability arising from any Security Breach. In addition, the products described in these materials may contain design defects or errors known as errata which may cause the product to deviate from published specifications. To the extent permitted by applicable law, Cypress reserves the right to make changes to this document without further notice. Cypress does not assume any liability arising out of the application or use of any product or circuit described in this document. Any information provided in this document, including any sample design information or programming code, is provided only for reference purposes. It is the responsibility of the user of this document to properly design, program, and test the functionality and safety of any application made of this information and any resulting product. "High-Risk Device" means any device or system whose failure could cause personal injury, death, or property damage. Examples of High-Risk Devices are weapons, nuclear installations, surgical implants, and other medical devices. "Critical Component" means any component of a High-Risk Device whose failure to perform can be reasonably expected to cause, directly or indirectly, the failure of the High-Risk Device, or to affect its safety or effectiveness. Cypress is not liable, in whole or in part, and you shall and hereby do release Cypress from any claim, damage, or other liability arising from any use of a Cypress product as a Critical Component in a High-Risk Device. You shall indemnify and hold Cypress, its directors, officers, employees, agents, affiliates, distributors, and assigns harmless from and against all claims, costs, damages, and expenses, arising out of any claim, including claims for product liability, personal injury or death, or property damage arising from any use of a Cypress product as a Critical Component in a High-Risk Device. Cypress products are not intended or authorized for use as a Critical Component in any High-Risk Device except to the limited extent that (i) Cypress's published data sheet for the product explicitly states Cypress has qualified the product for use in a specific High-Risk Device, or (ii) Cypress has given you advance written authorization to use the product as a Critical Component in the specific High-Risk Device and you have signed a separate indemnification agreement.

Cypress, the Cypress logo, Spansion, the Spansion logo, and combinations thereof, WICED, PSoC, CapSense, EZ-USB, F-RAM, and Traveo are trademarks or registered trademarks of Cypress in the United States and other countries. For a more complete list of Cypress trademarks, visit cypress.com. Other names and brands may be claimed as property of their respective owners.