Please note that Cypress is an Infineon Technologies Company.
The document following this cover page is marked as “Cypress” document as this is the company that originally developed the product. Please note that Infineon will continue to offer the product to new and existing customers as part of the Infineon product portfolio.

Continuity of document content
The fact that Infineon offers the following product as part of the Infineon product portfolio does not lead to any changes to this document. Future revisions will occur when appropriate, and any changes will be set out on the document history page.

Continuity of ordering part numbers
Infineon continues to support existing part numbers. Please continue to use the ordering part numbers listed in the datasheet for ordering.

AN INFINEON TECHNOLOGIES COMPANY

THIS SPEC IS OBSOLETE

Spec No: 001-46778

Spec Title: CY8CLED04D01, CY8CLED04D02, CY8CLED03D01, CY8CLED03D02, CY8CLED02D01, CY8CLED01D01, CY8CLED04G01, CY8CLED03G01, POWERPSOC(R) INTELLIGENT LED DRIVER TECHNICAL REFERENCE MANUAL (TRM)

Replaced by: NONE

PowerPSoC TRM
OBSOLETE

CY8CLED04D01, CY8CLED04D02
CY8CLED03D01, CY8CLED03D02
CY8CLED02D01, CY8CLED01D01
CY8CLED04G01, CY8CLED03G01

PowerPSoC® Intelligent LED Driver
Technical Reference Manual (TRM)

PowerPSoC TRM, Document # 001-46778 Rev. *I

February 19, 2021

Cypress Semiconductor
198 Champion Court
San Jose, CA 95134-1709
Phone (USA): 800.858.1810
Phone (Intnl.): 408.943.2600
http://www.cypress.com

Copyrights

Copyright © 2008-2021 Cypress Semiconductor Corporation. All rights reserved.

PSoC® and PowerPSoC® are registered trademarks and PrISM™ and PSoC Designer™ are trademarks of Cypress Semiconductor Corporation (Cypress), along with Cypress® and Cypress Semiconductor™. All other trademarks or registered trademarks referenced herein are the property of their respective owners.

Purchase of I^2C components from Cypress or one of its sublicensed Associated Companies conveys a license under the Philips I^2C Patent Rights to use these components in an I^2C system, provided that the system conforms to the I^2C Standard Specification as defined by Philips. As from October 1st, 2006, Philips Semiconductors has a new trade name - NXP Semiconductors.

The information in this document is subject to change without notice and should not be construed as a commitment by Cypress. While reasonable precautions have been taken, Cypress assumes no responsibility for any errors that may appear in this document. No part of this document may be copied or reproduced in any form or by any means without the prior written consent of Cypress. Made in the U.S.A.

Disclaimer

Any Source Code (software and/or firmware) is owned by Cypress Semiconductor Corporation (Cypress) and is protected by and subject to worldwide patent protection (United States and foreign), United States copyright laws and international treaty provisions. Cypress hereby grants to licensee a personal, non-exclusive, non-transferable license to copy, use, modify, create derivative works of, and compile the Cypress Source Code and derivative works for the sole purpose of creating custom software and or firmware in support of licensee product to be used only in conjunction with a Cypress integrated circuit as specified in the applicable agreement. Any reproduction, modification, translation, compilation, or representation of this Source Code except as specified above is prohibited without the express written permission of Cypress.

Disclaimer: CYPRESS MAKES NO WARRANTY OF ANY KIND, EXPRESS OR IMPLIED, WITH REGARD TO THIS MATERIAL, INCLUDING, BUT NOT LIMITED TO, THE IMPLIED WARRANTIES OF MERCHANTABILITY AND FITNESS FOR A PARTICULAR PURPOSE. Cypress reserves the right to make changes without further notice to the materials described herein. Cypress does not assume any liability arising out of the application or use of any product or circuit described herein. Cypress does not authorize its products for use as critical components in life-support systems where a malfunction or failure may reasonably be expected to result in significant injury to the user. The inclusion of Cypress' product in a life-support systems application implies that the manufacturer assumes all risk of such use and in doing so indemnifies Cypress against all charges.

Use may be limited by and subject to the applicable Cypress software license agreement.

Flash Code Protection

Note the following details of the Flash code protection features on Cypress devices.

Cypress products meet the specifications contained in their particular Cypress Data Sheets. Cypress believes that its family of products is one of the most secure families of its kind on the market today, regardless of how they are used. There may be methods, unknown to Cypress, that can breach the code protection features. Any of these methods, to our knowledge, would be dishonest and possibly illegal. Neither Cypress nor any other semiconductor manufacturer can guarantee the security of their code. Code protection does not mean that we are guaranteeing the product as "unbreakable."

Cypress is willing to work with the customer who is concerned about the integrity of their code. Code protection is constantly evolving. We at Cypress are committed to continuously improving the code protection features of our products.

OBSOLETE

Contents Overview

Section A: Overview 17

1. Pin Information 31

Section B: PSoC Core 39

2. CPU Core (M8C) 43
3. Supervisory ROM (SROM) 53
4. RAM Paging 63
5. Interrupt Controller 71
6. General Purpose I/O (GPIO) 79
7. Analog Output Drivers 87
8. Internal Main Oscillator (IMO) 89
9. Internal Low Speed Oscillator (ILO) 91
10. Sleep and Watchdog 93

Section C: Digital System 105

11. Global Digital Interconnect (GDI) 109
12. Array Digital Interconnect (ADI) 113
13. Row Digital Interconnect (RDI) 115
14. Digital Blocks 123

Section D: Analog System 161

15. Analog Interface 165
16. Analog Array 177
17. Analog Input Configuration 185
18. Analog Reference 189
19. Continuous Time PSoC Block 193
20. Switched Capacitor PSoC Block 199

Section E: System Resources 209

21. Digital Clocks 213
22. Multiply Accumulate (MAC) 225

OBSOLETE

23. Decimator 231
24. I2C 237
25. Internal Voltage Reference 255
26. System Resets 257
27. POR and LVD 263
28. I/O Analog Multiplexer 265

Section F: Power Peripherals **271**

29. Current Sense Amplifier 283
30. Digital-to-Analog Converter 287
31. Comparator 295
32. Analog MUX 301
33. Digital MUX 305
34. Hysteretic Controller 313
35. Digital Modulator 321
36. Gate Driver 345
37. Power FET 351
38. Switching Regulator 353

Section G: Register Reference **357**

39. Register Details 361

Section H: Glossary **515**

OBSOLETE

Contents

Section A: Overview **17**

Document Organization 17
Top Level Architecture 18
PowerPSoC® Functional Overview 18
PowerPSoC Device Characteristics 23
Design Power Supply Requirements 23
Power Supply Sequencing 23
Cautions and Warnings 26
Getting Started 27
Document History 27
Documentation Conventions 28

1. Pin Information **31**
   - 1.1 Pinouts 31
     - 1.1.1 CY8CLED04D0x 56-Pin Part Pinout 32
     - 1.1.2 CY8CLED04G01 56-Pin Part Pinout 33
     - 1.1.3 CY8CLED03D0x 56-Pin Part Pinout 34
     - 1.1.4 CY8CLED03G01 56-Pin Part Pinout 35
     - 1.1.5 CY8CLED02D0x 56-Pin Part Pinout 36
     - 1.1.6 CY8CLED01D0x 56-Pin Part Pinout 37

Section B: PSoC Core **39**

Top Level Core Architecture 39
Interpreting Core Documentation 40
Core Register Summary 41

2. CPU Core (M8C) **43**
   - 2.1 Overview 43
   - 2.2 Internal Registers 43
   - 2.3 Address Spaces 43
   - 2.4 Instruction Set Summary 44
   - 2.5 Instruction Formats 46
     - 2.5.1 One-Byte Instructions 46
     - 2.5.2 Two-Byte Instructions 46
     - 2.5.3 Three-Byte Instructions 47
   - 2.6 Addressing Modes 47
     - 2.6.1 Source Immediate 47
     - 2.6.2 Source Direct 48
     - 2.6.3 Source Indexed 48
     - 2.6.4 Destination Direct 49
     - 2.6.5 Destination Indexed 49
     - 2.6.6 Destination Direct Source Immediate 49
     - 2.6.7 Destination Indexed Source Immediate 50
     - 2.6.8 Destination Direct Source Direct 50
     - 2.6.9 Source Indirect Post Increment 51

OBSOLETE

2.6.10 Destination Indirect Post Increment 51
2.7 Register Definitions 52
2.7.1 CPU_F Register 52
3. Supervisory ROM (SROM) 53
3.1 Architectural Description 53
3.1.1 Additional SROM Feature 54
3.1.2 SROM Function Descriptions 54
3.1.2.1 SWBootReset Function 54
3.1.2.2 ReadBlock Function 55
3.1.2.3 WriteBlock Function 56
3.1.2.4 EraseBlock Function 56
3.1.2.5 ProtectBlock Function 56
3.1.2.6 TableRead Function 57
3.1.2.7 EraseAll Function 57
3.1.2.8 Checksum Function 57
3.1.2.9 Calibrate0 Function 57
3.1.2.10 Calibrate1 Function 57
3.2 Register Definitions 59
3.2.1 STK_PP Register 59
3.2.2 MVR_PP Register 59
3.2.3 MVW_PP Register 60
3.2.4 CPU_SCR1 Register 60
3.3 Clocking 61
3.3.1 DELAY Parameter 61
3.3.2 CLOCK Parameter 61
4. RAM Paging 63
4.1 Architectural Description 63
4.1.1 Basic Paging 63
4.1.2 Stack Operations 64
4.1.3 Interrupts 64
4.1.4 MVI Instructions 64
4.1.5 Current Page Pointer 64
4.1.6 Index Memory Page Pointer 65
4.2 Register Definitions 66
4.2.1 TMP_DRx Registers 66
4.2.2 CUR_PP Register 66
4.2.3 STK_PP Register 67
4.2.4 IDX_PP Register 67
4.2.5 MVR_PP Register 68
4.2.6 MVW_PP Register 68
4.2.7 CPU_F Register 69
5. Interrupt Controller 71
5.1 Architectural Description 71
5.1.1 Posted Versus Pending Interrupts 72
5.2 Application Description 73
5.3 Register Definitions 74
5.3.1 INT_CLRx Registers 74
5.3.1.1 INT_CLR0 Register 74
5.3.1.2 INT_CLR1 Register 75
5.3.1.3 INT_CLR2 Register 75
5.3.1.4 INT_CLR3 Register 75
5.3.2 INT_MSKx Registers 76
5.3.2.1 INT_MSK3 Register 76

OBSOLETE

5.3.2.2 INT_MSK2 Register 76
5.3.2.3 INT_MSK0 Register 77
5.3.2.4 INT_MSK1 Register 77
5.3.3 INT_VC Register 78
5.3.4 CPU_F Register 78
6. General Purpose I/O (GPIO) 79
6.1 Architectural Description 79
6.1.1 Digital I/O 79
6.1.2 Global I/O 80
6.1.3 Analog Input 80
6.1.4 GPIO Block Interrupts 82
6.2 Register Definitions 83
6.2.1 FN0DR/PRTxDR Registers 83
6.2.2 FN0IE/PRTxIE Registers 83
6.2.3 FN0GS/PRTxGS Registers 83
6.2.4 FN0DMx/PRTxDMx Registers 85
6.2.5 FN0ICx/PRTxICx Registers 86
7. Analog Output Drivers 87
7.1 Architectural Description 87
7.2 Register Definitions 88
7.2.1 ABF_CR0 Register 88
8. Internal Main Oscillator (IMO) 89
8.1 Architectural Description 89
8.2 Application Description 89
8.2.1 Trimming the IMO 89
8.3 Register Definitions 89
8.3.1 CPU_SCR1 Register 89
8.3.2 OSC_CR2 Register 90
8.3.3 IMO_TR Register 90
9. Internal Low Speed Oscillator (ILO) 91
9.1 Architectural Description 91
9.2 Register Definitions 91
9.2.1 ILO_TR Register 91
10. Sleep and Watchdog 93
10.1 Architectural Description 93
10.1.1 32 kHz Clock Selection 93
10.1.2 Sleep Timer 93
10.2 Application Description 94
10.3 Register Definitions 95
10.3.1 INT_MSK0 Register 95
10.3.2 RES_WDT Register 95
10.3.3 CPU_SCR1 Register 96
10.3.4 CPU_SCR0 Register 97
10.3.5 OSC_CR0 Register 98
10.3.6 ILO_TR Register 99
10.4 Timing Diagrams 100
10.4.1 Sleep Sequence 100
10.4.2 Wake Up Sequence 101
10.4.3 Bandgap Refresh 102
10.4.4 Watchdog Timer 102
10.5 Power Consumption 103

OBSOLETE

Section C: Digital System **105**
Top Level Digital Architecture 105
Interpreting the Digital Documentation 105
Digital Register Summary 106
11. Global Digital Interconnect (GDI) **109**
11.1 Architectural Description 109
11.1.1 56-Pin Global Interconnect 110
11.2 Register Definitions 111
11.2.1 GDI_x_IN Registers 111
11.2.2 GDI_x_OU Registers 112
12. Array Digital Interconnect (ADI) **113**
12.1 Architectural Description 113
13. Row Digital Interconnect (RDI) **115**
13.1 Architectural Description 115
13.2 Register Definitions 117
13.2.1 RDIxRI Register 117
13.2.2 RDIxSYN Register 118
13.2.3 RDIxIS Register 119
13.2.4 RDIxLTx Registers 120
13.2.5 RDIxROx Registers 121
13.2.5.1 RDIxRO0 Register 121
13.2.5.2 RDIxRO1 Register 121
13.3 Timing Diagram 121
14. Digital Blocks **123**
14.1 Architectural Description 123
14.1.1 Input Multiplexers 124
14.1.2 Input Clock Resynchronization 124
14.1.2.1 Clock Resynchronization Summary 125
14.1.3 Output De-Multiplexers 125
14.1.4 Block Chaining Signals 125
14.1.5 Input Data Synchronization 125
14.1.6 Timer Function 125
14.1.6.1 Usability Exceptions 125
14.1.6.2 Block Interrupt 125
14.1.7 Counter Function 126
14.1.7.1 Usability Exceptions 126
14.1.7.2 Block Interrupt 126
14.1.8 Dead Band Function 126
14.1.8.1 Usability Exceptions 127
14.1.8.2 Block Interrupt 127
14.1.9 CRCPRS Function 127
14.1.9.1 Usability Exceptions 128
14.1.9.2 Block Interrupt 128
14.1.10 SPI Protocol Function 129
14.1.10.1 SPI Protocol Signal Definitions 129
14.1.11 SPI Master Function 130
14.1.11.1 Usability Exceptions 130
14.1.11.2 Block Interrupt 130
14.1.12 SPI Slave Function 130
14.1.12.1 Usability Exceptions 131
14.1.12.2 Block Interrupt 131
14.1.13 Asynchronous Transmitter and Receiver Functions 131
14.1.13.1 Asynchronous Transmitter Function 131

OBSOLETE

14.1.13.2 Usability Exceptions 131
14.1.13.3 Block Interrupt 131
14.1.13.4 Asynchronous Receiver Function 131
14.1.13.5 Usability Exceptions 132
14.1.13.6 Block Interrupt 132
14.2 Register Definitions 133
14.2.1 DxBxxDRx Registers 134
14.2.1.1 Timer Register Definitions 134
14.2.1.2 Counter Register Definitions 135
14.2.1.3 Dead Band Register Definitions 135
14.2.1.4 CRCPRS Register Definitions 136
14.2.1.5 SPI Master Register Definitions 136
14.2.1.6 SPI Slave Register Definitions 137
14.2.1.7 Transmitter Register Definitions 137
14.2.1.8 Receiver Register Definitions 137
14.2.2 DxBxxCR0 Register 138
14.2.3 INT_MSK1 Register 139
14.2.4 DxBxxFN Registers 140
14.2.5 DxBxxIN Registers 141
14.2.6 DxBxxOU Registers 141
14.3 Timing Diagrams 143
14.3.1 Timer Timing 143
14.3.2 Counter Timing 145
14.3.3 Dead Band Timing 145
14.3.3.1 Changing the PWM Duty Cycle 146
14.3.3.2 Kill Operation 146
14.3.4 CRCPRS Timing 148
14.3.5 SPI Mode Timing 148
14.3.6 SPIM Timing 149
14.3.7 SPIS Timing 152
14.3.8 Transmitter Timing 155
14.3.9 Receiver Timing 157

Section D: Analog System **161**
Top Level Analog Architecture 161
Interpreting the Analog Documentation 161
Application Description 162
Analog Register Summary 163
15. Analog Interface **165**
15.1 Architectural Description 165
15.1.1 Analog Data Bus Interface 166
15.1.2 Analog Comparator Bus Interface 166
15.1.3 Analog Column Clock Generation 166
15.1.3.1 Column Clock Synchronization 167
15.1.4 Decimator and Incremental ADC Interface 168
15.1.4.1 Decimator 168
15.1.4.2 Incremental ADC 168
15.1.5 Analog Modulator Interface 168
15.1.6 Analog Synchronization Interface (Stalling) 168
15.2 Application Description 168
15.2.1 SAR Hardware Acceleration 168
15.2.1.1 Architectural Description 169
15.3 Register Definitions 170

OBSOLETE

15.3.1 CMP_CR0 Register 170
15.3.2 ASY_CR Register 171
15.3.3 CMP_CR1 Register 172
15.3.4 DEC_CR0 Register 172
15.3.5 DEC_CR1 Register 173
15.3.6 CLK_CR0 Register 173
15.3.7 CLK_CR1 Register 174
15.3.8 AMD_CR0 Register 174
15.3.9 CMP_GO_EN Register 175
15.3.10 AMD_CR1 Register 175
15.3.11 ALT_CR0 Register 176
15.3.12 ALT_CR1 Register 176
15.3.13 CLK_CR2 Register 176
16. Analog Array 177
16.1 Architectural Description 177
16.1.1 NMux Connections 178
16.1.2 PMux Connections 179
16.1.3 RBotMux Connections 180
16.1.4 AMux Connections 181
16.1.5 CMux Connections 182
16.1.6 BMux SC/SD Connections 183
16.1.7 Analog Comparator Bus 183
16.2 Temperature Sensing Capability 183
17. Analog Input Configuration 185
17.1 Architectural Description 185
17.1.1 Two Column Analog Input Configuration 186
17.2 Register Definitions 187
17.2.1 AMX_IN Register 187
17.2.2 ABF_CR0 Register 187
18. Analog Reference 189
18.1 Architectural Description 189
18.2 Register Definitions 190
18.2.1 ARF_CR Register 190
19. Continuous Time PSoC Block 193
19.1 Architectural Description 193
19.2 Register Definitions 195
19.2.1 ACBxxCR3 Register 195
19.2.2 ACBxxCR0 Register 197
19.2.3 ACBxxCR1 Register 197
19.2.4 ACBxxCR2 Register 198
20. Switched Capacitor PSoC Block 199
20.1 Architectural Description 199
20.2 Application Description 201
20.3 Register Definitions 202
20.3.1 ASCxxCR0 Register 203
20.3.2 ASCxxCR1 Register 204
20.3.3 ASCxxCR2 Register 204
20.3.4 ASCxxCR3 Register 205
20.3.5 ASDxxCR0 Register 206
20.3.6 ASDxxCR1 Register 207
20.3.7 ASDxxCR2 Register 207
20.3.8 ASDxxCR3 Register 208

OBSOLETE

Section E: System Resources **209**
Top Level System Resources Architecture 209
Interpreting the System Resources Documentation 209
System Resources Register Summary 210
21. Digital Clocks **213**
21.1 Architectural Description 213
21.1.1 Internal Main Oscillator 213
21.1.2 Internal Low Speed Oscillator 213
21.1.3 External Clock 215
21.1.3.1 Clock Doubler 215
21.1.3.2 Switch Operation 215
21.2 Register Definitions 217
21.2.1 INT_CLR0 Register 217
21.2.2 INT_MSK0 Register 217
21.2.3 OSC_GO_EN Register 218
21.2.4 OSC_CR4 Register 219
21.2.5 OSC_CR3 Register 220
21.2.6 OSC_CR0 Register 221
21.2.7 OSC_CR1 Register 222
21.2.8 OSC_CR2 Register 223
22. Multiply Accumulate (MAC) **225**
22.1 Architectural Description 225
22.2 Application Description 226
22.2.1 Multiplication with No Accumulation 226
22.2.2 Accumulation After Multiplication 226
22.3 Register Definitions 226
22.3.1 MULx_X Register 227
22.3.2 MULx_Y Register 227
22.3.3 MULx_DH Register 227
22.3.4 MULx_DL Register 228
22.3.5 MACx_X/ACCx_DR1 Register 228
22.3.6 MACx_Y/ACCx_DR0 Register 229
22.3.7 MACx_CL0/ACCx_DR3 Register 229
22.3.8 MACx_CL1/ACCx_DR2 Register 229
23. Decimator **231**
23.1 Architectural Description 231
23.1.1 Type 2 Decimator Block 231
23.1.2 Decimator Scenarios 232
23.2 PSoC Device Distinctions 233
23.3 Register Definitions 233
23.3.1 DEC_DH Register 233
23.3.2 DEC_DL Register 233
23.3.3 DEC_CR0 Register 234
23.3.4 DEC_CR1 Register 234
23.3.5 DEC_CR2 Register 235
24. I2C **237**
24.1 Architectural Description 237
24.1.1 Basic I2C Data Transfer 237
24.2 Application Description 238
24.2.1 Slave Operation 238
24.2.2 Master Operation 239
24.3 Register Definitions 240
24.3.1 I2C_CFG Register 240

OBSOLETE

24.3.2 I2C_SCR Register 242
24.3.3 I2C_DR Register 244
24.3.4 I2C_MSCR Register 245
24.4 Timing Diagrams 247
24.4.1 Clock Generation 247
24.4.2 Basic Input/Output Timing 248
24.4.3 Status Timing 248
24.4.4 Master Start Timing 249
24.4.5 Master Restart Timing 251
24.4.6 Master Stop Timing 251
24.4.7 Master/Slave Stall Timing 252
24.4.8 Master Lost Arbitration Timing 252
24.4.9 Master Clock Synchronization 253
25. Internal Voltage Reference 255
25.1 Architectural Description 255
25.2 Register Definitions 255
25.2.1 BDG_TR Register 255
26. System Resets 257
26.1 Architectural Description 257
26.2 Pin Behavior During Reset 257
26.2.1 GPIO Behavior on Power Up 257
26.2.2 GPIO Behavior on External Reset 258
26.3 Register Definitions 258
26.3.1 CPU_SCR1 Register 258
26.3.2 CPU_SCR0 Register 259
26.4 Timing Diagrams 260
26.4.1 Power On Reset 260
26.4.2 External Reset 260
26.4.3 Watchdog Timer Reset 260
26.4.4 Reset Details 262
26.5 Power Consumption 262
27. POR and LVD 263
27.1 Architectural Description 263
27.2 Register Definitions 264
27.2.1 VLT_CR Register 264
27.2.2 VLT_CMP Register 264
28. I/O Analog Multiplexer 265
28.1 Architectural Description 265
28.2 PowerPSoC Device Distinctions 266
28.3 Application Description 266
28.3.1 Capacitive Sensing 266
28.3.2 Analog Input 267
28.3.3 Crosspoint Switch 267
28.3.4 Charging Current 267
28.4 Register Definitions 268
28.4.1 AMUX_CFG Register 268
28.4.2 DAC_D Register 268
28.4.3 AMUX_CLK Register 269
28.4.4 MUX_CRx Registers 269
28.4.5 DAC_CR Register 269

Section F: Power Peripherals 271
Power Peripherals 272

OBSOLETE

Application Description of the PowerPSoC 276
Power Peripherals Register Summary 279
29. Current Sense Amplifier 283
29.1 Architectural Description 284
29.2 Application Description 284
29.3 Register Definitions 286
29.3.1 CSAx_CR Current Sense Amplifier Control Register 286
30. Digital-to-Analog Converter 287
30.1 Architectural Description 288
30.1.1 Block Overview (VDAC) 288
30.2 Application Description 290
30.3 Register Definitions 290
30.3.1 VDACx_CR (Voltage DAC Control Register) 291
30.3.2 VDACx_DR0 (Voltage DAC Data Register 0) 291
30.3.3 VDACx_DR1 (Voltage DAC Data Register 1) 292
30.4 Timing Diagrams 293
31. Comparator 295
31.1 Architectural Description 295
31.1.1 Comparator Interrupts 296
31.2 Application Description 296
31.2.1 Applications 296
31.3 Register Definitions 298
31.3.1 CMPCHx_CR Power Channel Comparator Control Register 298
31.3.2 CMPBNKx_CR Comparator Control Register 299
31.4 Timing Diagrams 300
32. Analog MUX 301
32.1 Architectural Description 301
32.2 Register Definitions 303
32.2.1 PAMUX_S1 Power Analog Mux Select Input Register 1 303
32.2.2 PAMUX_S2 Power Analog Mux Select Input Register 2 303
32.2.3 PAMUX_S3 Power Analog Mux Select Input Register 3 304
32.2.4 PAMUX_S4 Power Analog Mux Select Input Register 4 304
33. Digital MUX 305
33.1 Architectural Description 305
33.1.1 Digital Muxes to Hysteretic Channel 306
33.1.2 Digital Muxes to Function I/O 307
33.2 Register Definitions 308
33.2.1 PDMUX_S1 Power Digital Mux Select Register 1 308
33.2.2 PDMUX_S2 Power Digital Mux Select Register 2 309
33.2.3 PDMUX_S3 Power Digital Mux Select Register 3 309
33.2.4 PDMUX_S4 Power Digital Mux Select Register 4 310
33.2.5 PDMUX_S5 Power Digital Mux Select Register 5 311
33.2.6 PDMUX_S6 Power Digital Mux Select Register 6 312
34. Hysteretic Controller 313
34.1 Architectural Description 314
34.1.1 Circuit Operation 314
34.1.1.1 Main Loop Function 314
34.1.1.2 DIM Function 315
34.1.1.3 Trip Function 316
34.2 Application Description 317
34.2.1 Circuit Operation 317
34.3 Register Definitions 318
34.3.1 HYSCTLRx_CR Hysteretic Controller Configuration Register 1 318

CONFIDENTIAL

34.4 Timing Diagrams 319
35. Digital Modulator 321
35.1 Architectural Description 321
35.1.1 Block Overview 322
35.1.1.1 PWM Mode 322
35.1.1.2 PrISM Mode 323
35.1.1.3 DMM Mode 324
35.1.2 Counter Directions 326
35.1.2.1 Left Alignment 326
35.1.2.2 Right Alignment 326
35.1.2.3 Center Alignment 327
35.2 Register Definitions 328
35.2.1 DPWMxPCF Programmable Clock Frequency Scalar Register 328
35.2.2 DPWMxPDH High Byte of 16-Bit Period Register 329
35.2.3 DPWMxPDL Low Byte of 16-Bit Period Register 329
35.2.4 DPWMxPWH High Byte of 16-Bit Pulse Width Register 330
35.2.5 DPWMxPWL Low Byte of 16-Bit Pulse Width Register 330
35.2.6 DPWMxPCH High Byte of 16-Bit Phase Control Register 331
35.2.7 DPWMxPCL Low Byte of 16-Bit Phase Control Register 331
35.2.8 DPWMxGCFG Digital Modulator General Configuration Register 332
35.2.9 DPWMxPCFG Digital Modulator Operating Configuration Register 332
35.2.10 DPWMINTFLAG Digital Modulator Interrupt Status Register 333
35.2.11 DPWMINTMSK Digital Modulator Interrupt Mask Register 333
35.2.12 DPWMSYNC Digital Modulator Sync Mode Register 334
35.2.13 Dynamic and Static Configuration Registers 335
35.2.13.1 Notes on Dynamic Registers 335
35.2.14 Register Write Synchronization 336
35.2.15 Use of Very Low Period Values 336
35.2.15.1 Rules Governing Very Low Period Values 336
35.3 Timing Diagrams 337
35.3.1 PWM Timing 338
35.3.2 DMM Timing 338
35.3.3 PrISM Timing 338
35.4 SYNC MODE Use 339
35.5 Digital Modulator Interrupts 341
35.5.1 INTTYPE = ‘0’ 341
35.5.2 INTTYPE = ‘1’ 341
36. Gate Driver 345
36.1 Architectural Description 346
36.2 Application Description 346
36.3 Register Definitions 347
36.3.1 GDRVx_CR Gate Driver Control Register 347
36.4 Timing Diagrams 348
37. Power FET 351
37.1 Architectural Description 351
37.2 Application Description 352
37.3 Register Definitions 352
37.4 Timing Diagrams 352
38. Switching Regulator 353
38.1 Architectural Description 353
38.1.1 Power Modes 354
38.1.1.1 Active Mode 354
38.1.1.2 Power Down Mode 354

Obsolete

38.1.1.3 Sleep Mode 354
38.1.2 Interrupt 355
38.2 Application Description 356
38.3 Register Definitions 356
38.3.1 SREG_TST Switching Regulator Test Register 356

Section G: Register Reference 357
Register General Conventions 357
Register Naming Conventions 357
Register Mapping Tables 357
39. Register Details **361**
39.1 Maneuvering Around the Registers 361
39.1.1 Register Naming Conventions 362
39.2 Bank 0 Registers 363
39.3 Bank 1 Registers 468

Section H: Glossary 515

OBSOLETE

OBSOLETE

Section A: Overview

This document contains Specifications for all devices in the CY8CLED0xx0x PowerPSoC® family of products.

The PowerPSoC family incorporates Programmable System-on-Chip technology with the best in class power electronics controllers and switching devices to create easy to use system-on-chip solutions for lighting applications.

All PowerPSoC family devices are designed to replace traditional MCUs, system ICs, and the numerous discrete components that surround them. PowerPSoC devices feature high performance power electronics including 1A, 2 MHz power FETs, hysteretic controllers, current sense amplifiers, and PrISM/PWM modulators to create a complete power electronics solution for LED power management. Configurable power, analog, digital, and interconnect circuitry enables a high level of integration in a host of industrial, commercial, and consumer LED lighting applications.

This architecture integrates programmable analog and digital blocks to enable the user to create customized peripheral configurations that match the requirements of each individual application. Additionally, the device includes a fast CPU, Flash program memory, SRAM data memory, and configurable I/O in a range of convenient pinouts and packages.

For the most up-to-date Ordering, Pinout, Packaging, or Electrical Specification information, refer to the PowerPSoC device data sheet. To obtain the newest product documentation, go to the Cypress web site at http://www.cypress.com/powerpsoc. This section includes the following chapter:

- Pin Information on page 31

Document Organization

This manual is organized into sections and chapters, according to PowerPSoC functionality. Each section begins with documentation interpretation, a top level architectural explanation, PowerPSoC device distinctions (if relevant), and a register summary (if applicable). Most chapters within the sections have an introduction, an architectural/application description, PowerPSoC device distinctions (if relevant), register definitions, and timing diagrams. The sections are as follows:

- **Overview** – Presents the PowerPSoC top level architecture, PowerPSoC device characteristics and distinctions, how to get started with helpful information, and document history and conventions. The PowerPSoC device ***pinouts*** are detailed in the Pin Information chapter on page 31.
- **PSoC Core** – Describes the heart of the PowerPSoC device in various chapters, beginning with an architectural overview and a summary list of registers pertaining to the PSoC core. See "PSoC Core" on page 39.
- **Digital System** – Describes the configurable PowerPSoC digital system in various chapters, beginning with an architectural overview and a summary list of registers pertaining to the digital system. See the "Digital System" on page 105.
- **Analog System** – Describes the configurable PowerPSoC analog system in various chapters, beginning with an architectural overview and a summary list of registers pertaining to the analog system. See the "Analog System" on page 161.
- **System Resources** – Presents additional PowerPSoC system resources, depending on the PowerPSoC device, beginning with an overview and a summary list of registers pertaining to system resources. See "System Resources" on page 209.
- **Power Peripherals** – Describes the power peripherals of the PowerPSoC device in various chapters, beginning with an architectural overview and a summary list of registers pertaining to the power peripherals. See "Power Peripherals" on page 271.
- **Register Reference** – Lists all PowerPSoC device registers in Register Mapping Tables, on page 357, and presents bit-level detail of each PowerPSoC register in its own Register Details chapter on page 361. Where applicable, detailed register descriptions are also located in each chapter.

Obsolete

- **Glossary** – Defines the specialized terminology used in this manual. Glossary terms are presented in ***bold, italic font*** throughout this manual. See the "Glossary" on page 515.
- **Index** – Lists the location of key topics and elements that constitute and empower the PowerPSoC device. See the "Index" on page 531.

Top Level Architecture

The "PowerPSoC Architectural Block Diagram" on page 22 illustrates the top level architecture for the family of PowerPSoC devices.

PowerPSoC® Functional Overview

The PowerPSoC family incorporates mixed-signal array technology with the best in class power electronics controllers and switching devices to create easy to use system-on-chip solutions for lighting applications.

All PowerPSoC family devices are designed to replace traditional MCUs, system ICs, and the numerous discrete components that surround them. PowerPSoC devices feature high performance power electronics including 1A 2 MHz power FETs, hysteretic controllers, current sense amplifiers, and PrISM/PWM modulators to create a complete power electronics solution for LED power management. Configurable power, analog, digital, PSoC, and interconnect circuitry enables a high level of integration in a host of industrial, commercial, and consumer LED lighting applications.

This architecture integrates programmable analog and digital blocks to enable the user to create customized peripheral configurations that match the requirements of each individual application. Additionally, the device includes a fast CPU, Flash program memory, SRAM data memory, and configurable I/O in a range of convenient pinouts and packages.

The PowerPSoC architecture comprises five main areas: PSoC core, digital system, analog system, system resources, and power peripherals, which include power FETs, hysteretic controllers, current sense amplifiers, and PrISM/PWM modulators. Configurable global busing combines all the device resources into a complete custom system. The PowerPSoC family of devices can have up to 10-port I/Os that connect to the global digital and analog interconnects, providing access to eight digital blocks and six analog blocks.

Power Peripherals

The PowerPSoC family of intelligent power controller ICs are used in lighting applications that need traditional MCUs and discrete power electronics support. The power peripherals of the CY8CLED04D0X include four 32V power MOSFETs with current ratings up to 1A each. It also integrates gate drivers that enable applications to drive external MOSFETs for higher current and voltage capabilities. The controller is a programmable threshold hysteretic controller, with user-selectable feedback paths that use the PowerPSoC device in current mode floating load buck, boost, and floating load buck/boost configurations.

Hysteretic Controllers

The hysteretic controllers provide cycle by cycle switch control with fast transient response which simplifies system design by requiring no external compensation. The hysteretic controllers include the following key features:

- Four independent channels
- DAC configurable thresholds
- Wide switching frequency range from 20 kHz to 2 MHz
- Programmable minimum on/off time
- Floating load buck, boost, and/or floating load buck-boost topology controller

The PowerPSoC contains four hysteretic controllers. There is one hysteretic controller for each channel of the device. The reference inputs of the hysteretic controller are provided by the reference DACs.

The hysteretic control function output is generated by comparing the feedback value to two configurable thresholds. Going below the lower threshold turns the switch ON and exceeding the upper threshold turns the switch off.

Low Side N-Channel FETs

The internal low side N-Channel FETs are designed to enhance system integration. The low side N-Channel FETs include the following key features:

- Drive capability up to 1A
- Transition time down to 20 ns (rise/fall times) to ensure high efficiency (>90% at full load)
- Drain source voltage rating 32V
- Low RDS(ON) to ensure high efficiency
- Maximum switching frequency up to 2 MHz

OBSOLETE

External Gate Drivers

These gate drivers enable the use of external FETs with higher current capabilities or lower RDS(ON). The external gate drivers directly drive MOSFETS that are used in switching applications. The gate driver provides four programmable drive strength steps to enable improved EMI management. The external gate drivers include the following key features:

- Programmable drive strength options (25%, 50%, 75%, 100%) for EMI management
- Rise/fall times at 55 ns with 20 nC load

Dimming Modulation Schemes

There are three dimming modulation schemes available with the PowerPSoC. The configurable modulation schemes are:

- Precision Illumination Signal Modulation (PrISM™)
- Delta Sigma Modulation Mode (DMM)
- Pulse Width Modulation (PWM)

PrISM Mode Configuration

- High resolution operation up to 16 bits
- Dedicated PrISM module enables customers to use core PSoC digital blocks for other needs
- Clocking up to 48 MHz
- Selectable output signal density
- Reduced EMI

The PrISM mode compares the output of a pseudo-random counter with a signal density value. The comparator output asserts when the count value is less than or equal to the value in the signal density register.

DMM Mode Configuration

- High resolution operation up to 16 bits
- Configurable output frequency and delta sigma modulator width to trade off repeat rates versus resolution
- Dedicated DMM module enables customers to use PSoC digital blocks for other uses
- Clocking up to 48 MHz

The DMM modulator consists of a 12-bit PWM block and a 4-bit DSM (Delta Sigma Modulator) block. The width of the PWM, the width of the DMM, and the clock defines the output frequency. The duty cycle of the PWM output is dithered by using the DSM block which has a user selectable resolution up to 4 bits.

PWM Mode Configuration

- High resolution operation up to 16 bits
- User programmable period from 1 to 65535 clocks
- Dedicated PWM module enables customers to use core PSoC digital blocks for other use
- Interrupt on rising edge of the output or terminal count
- Precise PWM phase control to manage system current edges
- Phase synchronization among the four channels
- PWM output can be aligned to left, right, or center

The PWM features a down counter and a pulse width register. A comparator output is asserted when the count value is less than or equal to the value in the pulse width register.

Current Sense Amplifier

An off-chip resistor, Rsense, is used for high side current measurement. Four high side current sense amplifiers provide differential sense capability to sense voltage across current sense resistors in lighting systems. The current sense amplifier includes the following key features:

- Operation with high common mode voltage to 32V
- High common mode rejection ratio
- Programmable bandwidth to optimize system noise immunity

The output of the current sense amplifier goes to the Power Peripherals Analog Multiplexer where the user selects which hysteretic controller to route to. The following table illustrates example values of Rsense for different currents.

Rsense Values for Different Currents

Maximum Load Current (mA)	Typical Rsense (mΩ)
1000	100
750	130
500	200
350	300

OBSOLETE

Voltage Comparators

There are six comparators that provide high speed comparator operation for over voltage, over current, and various other system event detections. For example, the comparators may be used for zero crossing detection for an AC input line or monitoring total DC bus current. Programmable internal analog routing allows these comparators to monitor various analog signals. These comparators include the following key features:

- High speed comparator operation: 100 ns response time
- Programmable interrupt generation
- Low input offset voltage and input bias currents

Six precision voltage comparators are available. The voltage comparator receives both its inputs from the analog multiplexers and routes the output to the digital multiplexer. A programmable inverter is used to select the output polarity. User selectable hysteresis can be enabled or disabled to trade-off noise immunity versus comparator sensitivity.

Reference DACs

The reference DACs are used to generate set points for various analog modules such as PWM controllers and comparators. The Reference DACs include the following key features:

- 8-bit resolution
- Guaranteed monotonic operation
- Low gain error
- 10 µs settling time

These DACs are available to provide programmable references for the various analog and comparator functions and are controlled by memory mapped registers.

DAC[0:7] are embedded in the hysteretic controllers and are required to set the upper and lower thresholds for channel 0 to 3.

DAC [8:13] are connected to the Power Peripherals Analog Multiplexer and provide programmable references to the comparator bank. These are used to set trip points which enable over voltage, over current, and other system event detection.

Built-In Switching Regulator

The switching regulator is used to power the low voltage (5V portion of the device) from the input line. This regulator is based upon a peak current control loop which can support up to 250 mA of output current. The current not being consumed by PowerPSoC is used to power additional system peripherals. The key features of the built-in switching regulator include:

- Ability to self power device from input line
- Small filter component sizes
- Fast response to transients

Analog Multiplexer

The analog multiplexer is used to multiplex analog signals between the power peripheral blocks. The CPU configures the Power Peripherals Analog Multiplexer connections using memory mapped registers. The analog multiplexer includes the following key features:

- Connect signals to ensure needed flexibility
- Ensure signal integrity for minimum signal corruption
- Configurability via Cypress PSoC Designer 5.0

Digital Multiplexer

The digital multiplexer is used to multiplex digital signals between the power peripheral blocks.The Power Peripherals Digital Multiplexer is a configurable switching matrix that connects the power peripheral digital resources. This Power Peripheral Digital Multiplexer is independent of the main PSoC digital buses or global of the PSoC core. The digital multiplexer includes the following key features:

- Connect signals to ensure needed flexibility
- Ensure signal for minimum signal corruption
- Configurability via Cypress PSoC Designer 5.0

Function Pin (FN0[0:3])

The function I/O pins are a set of dedicated control pins used to perform system level functions of the power peripherals blocks of the PowerPSoC. These pins are dynamically configurable, enabling them to perform a multitude of input and output functions. These I/Os have direct access to the input and output of the voltage comparators, input of the hysteretic controller, and output of the digital modulator blocks for the device. Some of the key system benefits of the function I/O are:

- Enabling higher voltage current-sense amplifier
- Synchronizing dimming of multiple PowerPSoC controllers
- Programmable fail safe monitor and dedicated shutdown of hysteretic controller

Along with the above functionality, these I/Os also provide interrupt functionality enabling intelligent system responses to changes in the system external to the device.

PRELIMINARY

PSoC Core

The PSoC core is a powerful engine that supports a rich feature set. The core includes a CPU, memory, clocks, and configurable GPIO (General Purpose I/O).

The ***M8C*** CPU core is a powerful processor with speeds up to 24 MHz, providing a four MIPS 8-bit Harvard architecture microprocessor. The CPU uses an interrupt controller with up to 26 vectors to simplify programming of real time embedded events. The program execution is timed and protected using the included Sleep and Watchdog Timers (WDT).

Memory encompasses 16K of ***Flash*** for program storage, 1K of SRAM for data storage, and up to 2K of EEPROM emulated using the Flash. Program Flash uses four protection levels on blocks of 64 bytes, allowing customized software IP protection.

The PSoC device incorporates flexible internal clock generators, including a 24 MHz IMO (internal main oscillator) accurate to 5% over temperature and voltage. The 24 MHz IMO can also be doubled to 48 MHz for use by the digital system. A low power 32 kHz ILO (internal low speed oscillator) is provided for the Sleep timer and WDT. The clocks, together with programmable clock dividers (as a system resource), provide the flexibility to integrate almost any timing requirement into the PowerPSoC device.

PowerPSoC GPIOs provide connection to the CPU, digital, and analog resources of the device. Each pin's drive mode may be selected from eight options, allowing great flexibility in external interfacing. Every pin also has the capability to generate a system interrupt on high level, low level, and change from last read.

Digital System

The digital system contains eight digital PSoC blocks. Each block is an 8-bit resource that can be used alone or combined with other blocks to form 8, 16, 24, and 32-bit peripherals, which are called user module references.

Digital peripheral configurations include those listed below.

- DALI
- DMX512
- Counters (8 to 32 bit)
- Timers (8 to 32 bit)
- UART 8 bit with selectable parity
- SPI master and slave
- I2C slave and multi-master
- Cyclical redundancy checker/generator (8 to 32 bit)
- IrDA
- Pseudo random sequence generators (8 to 32 bit)

The digital blocks can be connected to any GPIO through a series of global buses that route any signal to any pin. The buses also allow signal multiplexing and performing logic operations. This configurability frees your designs from the constraints of a fixed peripheral controller.

There are four digital blocks per row. This allows you the optimum choice of system resources for your application.

Analog System

The analog system contains six configurable blocks, each comprised of an opamp circuit allowing the creation of complex analog signal flows. Analog peripherals are very flexible and can be customized to support specific application requirements. Some of the more common PowerPSoC analog functions (most available as user modules) are listed below.

- Analog-to-digital converters (up to 2, with 6 to 12-bit resolution, selectable as incremental, Delta Sigma, and SAR)
- Filters (2 and 4 pole band-pass, low-pass, and notch)
- Amplifiers (up to 2, with selectable gain to 48x)
- Instrumentation amplifiers (1 with selectable gain to 93x)
- Comparators (up to 2, with 16 selectable thresholds)
- DACs (up to 2, with 6 to 9-bit resolution)
- Multiplying DACs (up to 2, with 6 to 9-bit resolution)
- High current output drivers (two with 30 mA drive as a PSoC core resource)
- 1.3V reference (as a system resource)
- Modulators
- Correlators
- Peak detectors
- Many other topologies possible

Analog blocks are arranged in columns of three, which include one CT (Continuous Time) and two SC (Switched Capacitor) blocks.

The Analog Multiplexer System

The Analog Mux Bus connects to every GPIO pin in ports 0 to 2. Pins can be connected to the bus individually or in any combination. The bus also connects to the analog system for analysis with comparators and analog-to-digital converters. It can be split into two sections for simultaneous dual-channel processing. An additional analog input multiplexer provides a second path to bring Port 0 pins to the analog array.

Switch control logic enables selected pins to precharge continuously under hardware control. This enables capacitive measurement for applications such as touch sensing. Other multiplexer applications include:

- Track pad, finger sensing
- Crosspoint connection between any I/O pin combinations

When designing capacitive sensing applications, refer to the latest signal-to-noise signal level requirements application notes, found at http://www.cypress.com Documentation >> Application Notes. In general, and unless otherwise noted in the relevant application notes, the minimum signal-to-noise ratio (SNR) for CapSense applications is 5:1.

PROFILE

Additional System Resources

The System Resources provide additional PowerPSoC capability useful in complete systems, depending on the features of your PowerPSoC device. Additional resources include a multiplier, decimator, I^2C module, low voltage detection, and power on reset. Brief statements describing the merits of each resource follow:

- Digital clock dividers provide three customizable clock frequencies for use in applications. The clocks can be routed to both the digital and analog systems. The designer can generate additional clocks using digital PSoC blocks as clock dividers.
- Two multiply accumulates (MACs) provide fast 8-bit multipliers with 32-bit accumulate, to assist in both general math and digital filters.
- A decimator provides a custom hardware filter for digital signal processing applications including creation of Delta Sigma ADCs.
- The I2C module provides 100 and 400 kHz communication over two wires. Slave, master, and multi-master are supported.
- Low Voltage Detection (LVD) interrupts signal the application of falling voltage levels, while the advanced POR (power on reset) circuit eliminates the need for a system supervisor.
- An internal 1.3V reference provides an absolute reference for the analog system, including ADCs and DACs.
- Versatile analog multiplexer system.

PowerPSoC Architectural Block Diagram

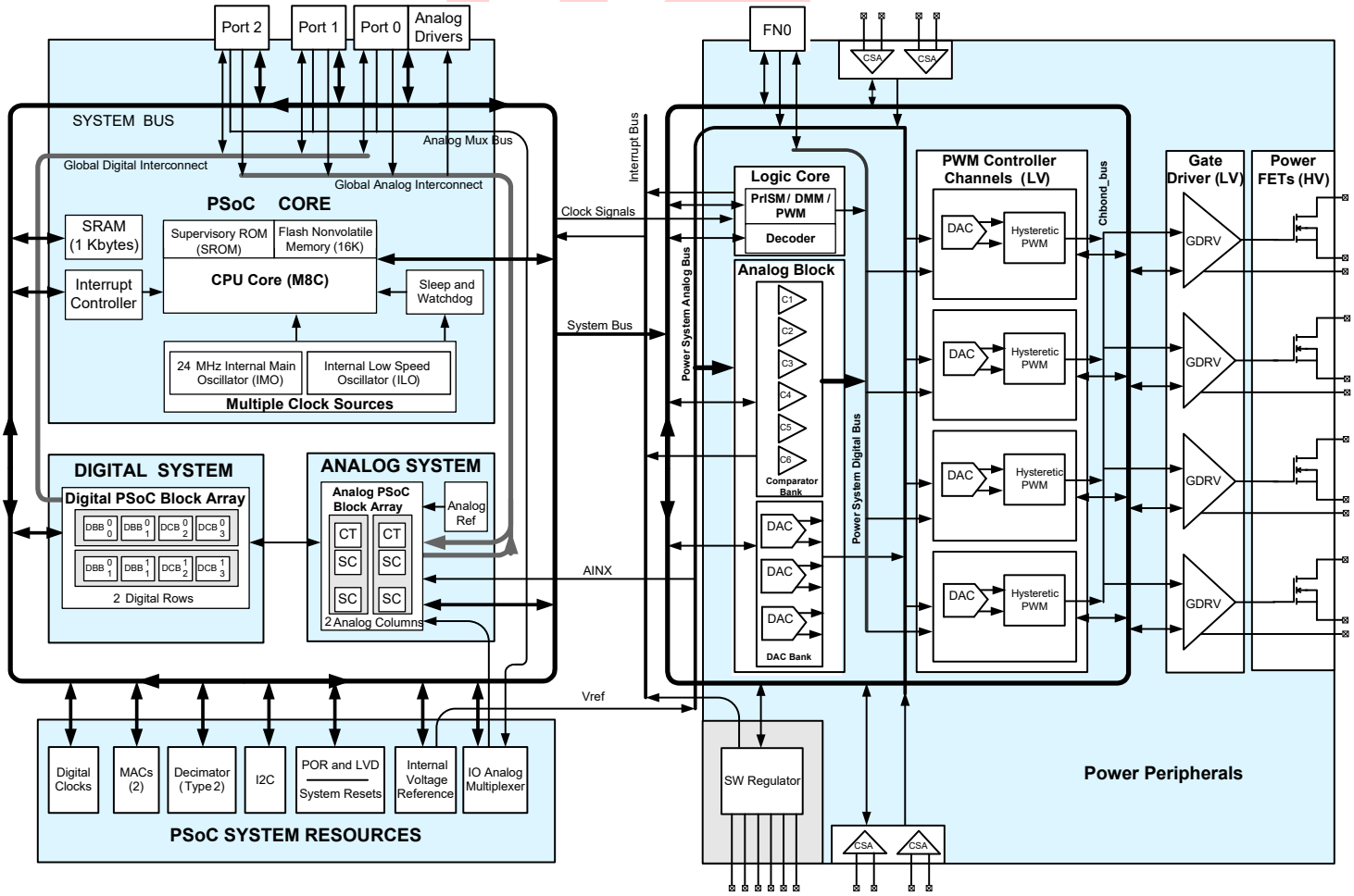

PowerPSoC Device Characteristics

There are two device groups in the PowerPSoC family. One includes a 4-channel 56-pin QFN and the other a 3-channel 56-pin QFN. These devices are summarized in the following table.

PowerPSoC Device Characteristics

Device Group	Internal Power FETs	External Gate Drivers	Digital I/O	Digital Rows	Digital Blocks	Analog Inputs	Analog Outputs	Analog Columns	Analog Blocks	SRAM Size	Flash Size
CY8CLED04D01-56LTXI	4X1.0A	4	14	2	8	14	2	2	6	1K	16K
CY8CLED04D02-56LTXI	4X0.5A	4	14	2	8	14	2	2	6	1K	16K
CY8CLED04G01-56LTXI	0	4	14	2	8	14	2	2	6	1K	16K
CY8CLED03D01-56LTXI	3X1.0A	3	14	2	8	14	2	2	6	1K	16K
CY8CLED03D02-56LTXI	3X0.5A	3	14	2	8	14	2	2	6	1K	16K
CY8CLED03G01-56LTXI	0	3	14	2	8	14	2	2	6	1K	16K
CY8CLED02D01-56LTXI	2X1.0A	2	14	2	8	14	2	2	6	1K	16K
CY8CLED01D01-56LTXI	1X1.0A	1	14	2	8	14	2	2	6	1K	16K

The resources available for the PowerPSoC devices are detailed in the section titled “System Resources” on page 209.

Design Power Supply Requirements

This device uses multiple power supply domains. There are two major power domains; an LV (low voltage) domain (nominally 5V ± 5%) and an HV (high voltage) domain. (This power supply is derived by the system application by ensuring maximum instantaneous voltage across the power FET, Vds, to be less than 36V.) Both domains have multiple power supplies.

Depending on the system design parameters, there may be a requirement for sequencing the power supplies.

Power Supply Sequencing

Due to the structural nature of a MOSFET, there are parasitic capacitances that are present between the drain, gate, and source terminals. In the event of fast power supply ramp (faster than 15V/ms), or with small loads, these parasitic capacitances could cause the MOSFET to be in an ON state for short periods of time at system startup. This is because the PowerPSoC MOSFET is at an interface between the multiple power supply domains (GDVDD, HVDD), and the differences between these respective ramp rates is the potential reason for this condition.

In many systems that use PowerPSoC, the DC supply may be produced by a captive AC-DC converter that has a soft start mechanism built in to it. Such systems usually have a *slow* DC output ramp rate (in the order of 10s of milliseconds at the minimum). However, in certain systems, there are possibilities of fast input supply ramp rates (faster than 15V/ms), and the current that could flow through the load during the period when the FET is turned on (at system startup), could have an adverse effect on the load depending on its capability. Two examples of such systems are:

- Systems with a switch in between the AC-DC converter and the PowerPSoC-based converter – turning ON of the switch after powering the AC-DC converter could cause very fast ramp rates.
- Systems with a non-captive wall wart-based DC supplies that could be plugged into the PowerPSoC-based system after the wall wart has been plugged into the AC mains.

In systems like those mentioned above or similar that have a DC input supply (to PowerPSoC) with ramp rates at 15V/ms or faster, a power supply sequencing scheme must be implemented to prevent potential damage to the load and other components in the system. The following sections discuss methods of implementing this sequencing while using the internal MOSFETs.

Conditions that Warrant Sequencing

1. The use of PowerPSoC in a topology other than the floating load buck, such as boost, buck-boost, and SEPIC (single ended primary inductor converter), or any similar topology that has a large output capacitor.
2. When the load voltage in the system (using PowerPSoC as the driver) is less than 6.5V (for example, single LED load in an LED application).
3. When the DC input supply to the PowerPSoC-based system has a ramp rate of more than (faster than) 15V/ms.

Obsolete

Sequencing Requirements

If any of the previously mentioned conditions are true, one of the following cases must be implemented to prevent possible damage to the load.

Case 1 – Built-in Switching Regulator used to Generate 5V Rail

There are multiple 5V supply pins on PowerPSoC devices classified as VDD, AVDD, and GDVDD. VDD and AVDD represent supply for the microprocessor, digital peripherals, and analog peripherals. GDVDD is a dedicated 5V supply for the gate drive circuitry that is responsible for turning the power FETs ON/OFF. The intent of the sequencing requirements presented here is to delay the rise of GDVDD from 0V until VDD/AVDD has reached 2.5V. This is shown in the figure ahead "Power Supply Sequencing Requirement Between VDD/AVDD and GDVDD using Built-in Switching Regulator" on page 24 and represents the case when the built-in switching regulator on the PowerPSoC is used to generate the 5V rail.

Power Supply Sequencing Requirement Between VDD/AVDD and GDVDD using Built-in Switching Regulator

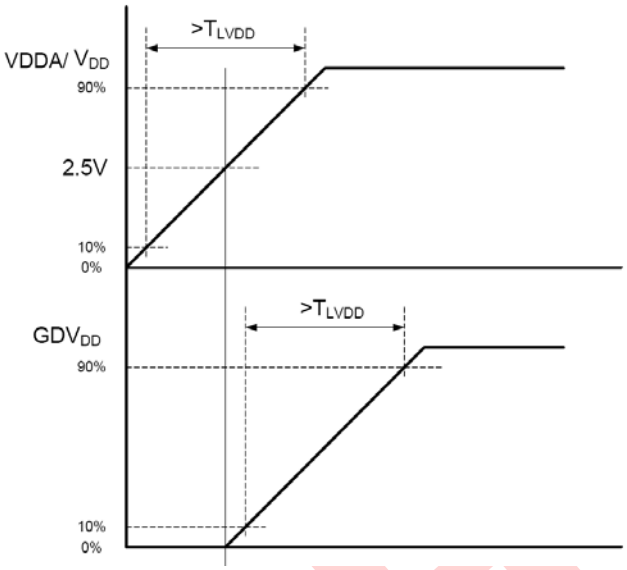

Consider the following:

- This sequencing is implemented using the circuit shown in the figure ahead "Circuit for Satisfying Sequencing Requirement on VDD/AVDD/GDVDD Rails" on page 25.
- Normally, the same 5V supply (generated using the built-in switching regulator) connects to VDD, AVDD, and GDVDD.
- The circuit shown in the shaded box must be placed between the VDD/AVDD and GDVDD rails, if any of the above mentioned conditions are met.
- The threshold voltage of the PFET (Vt) should be between 0.5V to 2V. If the Vt is higher, the Zener Diode D1 must be chosen such that the PFET is in an enhanced mode of operation.
- The choice of PFET must also be made with the R_{DS}(on) that provides tolerable power dissipation in the FET. For the purposes of calculation, the current draw from the GDVDD rail can be assumed to be 25 mA.
- The following are examples of part numbers used in this circuit:
  - 1N5222B (Zener Diode) from Fairchild Semiconductor®
  - NTE4151 (or NTA4151) (PFET) from ON Semiconductor®
  - 10K Resistor

Circuit for Satisfying Sequencing Requirement on VDD/AVDD/GDVDD Rails

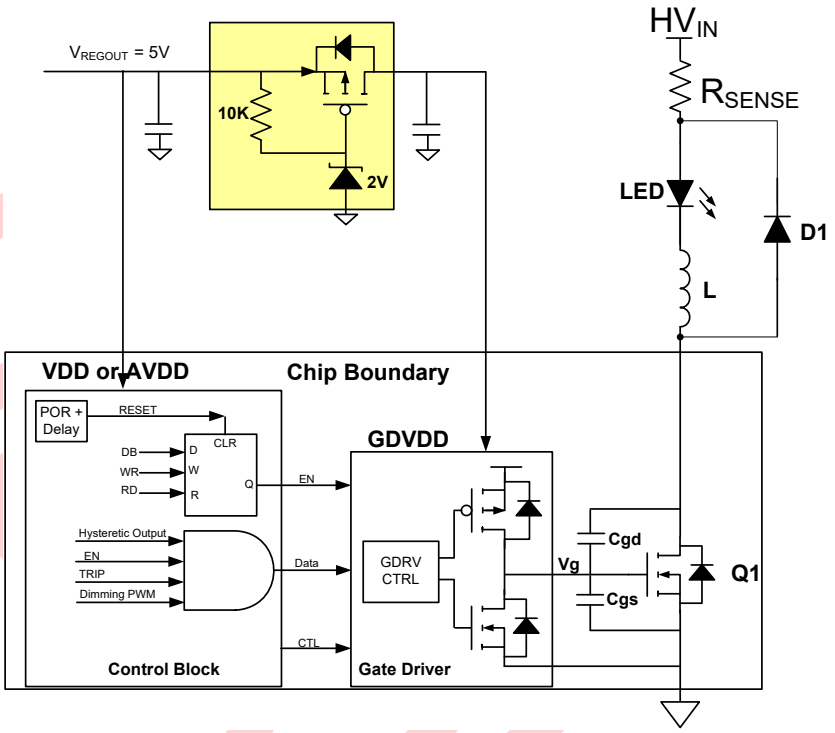

Case 2 – External Regulator used to Supply 5V Rail

In this case, the 5V supply from the external regulator is connected to VDD, AVDD, and GDVDD without any gating circuits. The intent of the sequencing requirements presented here is to delay the rise of HVDD from 0V until VDD/AVDD/GDVDD has reached at least 2.5V. This is shown in “Power Supply Sequencing Between VDD/AVDD/GDVDD and HVDD using External Regulator” on page 25.

Power Supply Sequencing Between VDD/AVDD/GDVDD and HVDD using External Regulator

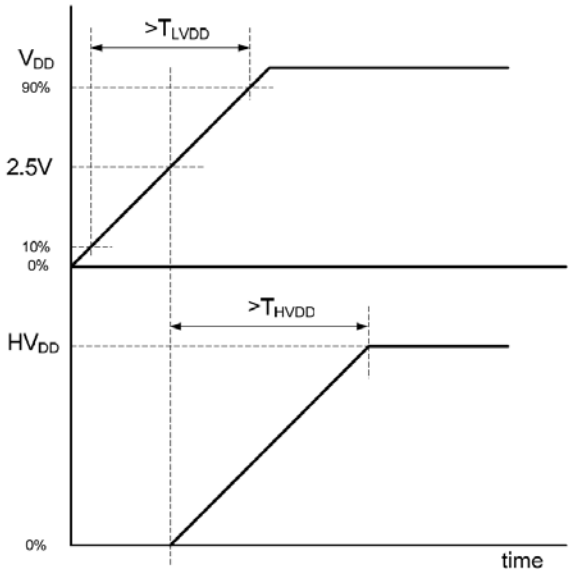

In this case, delaying the rise of the HVDD rail (from 0V) until VDD/AVDD/GDVDD has reached at least 2.5V will further alleviate the situation.

Requirements for PowerPSoC in Systems with Only External MOSFETs

The exact same principal applies to an external MOSFET as for an internal MOSFET. However, the same end goal can be achieved with an external MOSFET using an easier method since its gate terminal is accessible.

There must be a resistor connected between the gate and source terminals of each external MOSFET such that during normal operation, it does not hinder the PowerPSoC gate driver and it keeps the MOSFET in an OFF state during system startup.

Cautions and Warnings

- The input power supply (HV domain) should not ramp to its final state faster than 1 µs.
- In any power management system that depends on active feedback and any other control, the general practice must be to turn on the feedback and control system and allow sufficient time for them to begin operating in a stable manner before the main power transfer circuit is allowed to operate. For example, in a standard buck or boost regulator circuit:

  1. The feedback must be enabled first (whether it be the internal Current Sense Amplifier or an external signal).
  2. Then, the control signals can be enabled (whether they are an external PWM signal or the internal modulators).
  3. Finally, the parameters for the power transfer circuit must be set up

  Subsequent to this, the power transfer circuit (in this case the gate driver, whether it be for internal or external MOSFETs) must be enabled. This general procedural guideline must be followed for any system that uses PowerPSoC.

  As an example, in a typical floating load buck topology where the CSA, modulator and hysteretic controller have been configured appropriately, the CSA must be turned on first, followed by the modulator, and finally the hysteretic controller (which also turns on the gate driver for the FET).

  The hysteretic controller must be activated in that order. This is the recommended sequence to power up a channel on PowerPSoC.

OBSOLETE

Getting Started

The quickest path to understanding PowerPSoC is by reading the PowerPSoC device's data sheet and using the *PSoC Designer Integrated Development Environment (IDE)*. This manual is useful for understanding the details of the PowerPSoC integrated circuit.

Important Note For the most up-to-date Ordering, Packaging, or Electrical Specification information, refer to the individual PowerPSoC device's data sheet or go to http://www.cypress.com/powerpsoc.

Support

Free support for PowerPSoC products is available online at http://www.cypress.com. Resources include Training Seminars, Discussion Forums, Application Notes, PSoC Consultants, TightLink Technical Support Email/Knowledge Base, and Application Support Technicians.

Technical Support can be reached at http://www.cypress.com/support/ or can be contacted by phone at: 1-800-541-4736.

Product Upgrades

Cypress provides scheduled upgrades and version enhancements for PSoC Designer free of charge. You can order the upgrades from your distributor on CD-ROM or download them directly from http://www.cypress.com under Software. Also provided are critical updates to system documentation under Documentation in the upper right corner of http://www.cypress.com.

Development Kits

Development Kits are available from the following distributors: Digi-Key, Avnet, Arrow, and Future. The Cypress Online Store contains development kits, ***C*** compilers, and all accessories for PSoC development. Go to the Cypress Online Store web site at http://www.cypress.com/shop/. Under Product Categories click PSoC® Programmable System-on-Chip to view a current list of available items.

Document History

This section serves as a chronicle of the *CY8CLED04D01, CY8CLED04D02, CY8CLED03D01, CY8CLED03D02, CY8CLED02D01, CY8CLED01D01, CY8CLED04G01, CY8CLED03G01 PowerPSoC® Intelligent LED Driver Technical Reference Manual (TRM)*.

PowerPSoC Technical Reference Manual History

Version, Release Date	Originator	Description of Change
**, June 2008	HMT	CY8CLED04D01, CY8CLED04D02, CY8CLED03D01, CY8CLED03D02, CY8CLED02D01, CY8CLED01D01, CY8CLED04G01, CY8CLED03G01 PowerPSoC® Intelligent LED Driver Technical Reference Manual (TRM). New.
*A, February 2009	HMT	Updates for product release.
*B, March 2009	VED	Release to external web site.
*C, June 2009	FSU	Many corrections and revisions, including one and two channel part information and new package and pinout options.
*D, June 2009	FSU	Corrected pagination problems.
*E, October 2009	HMT	Update Cautions and Warnings, Power Supply Sequencing, part numbers, pinouts, and other items throughout.
*F, September 2011	DSG	Update info about SREG_TST register, Pin Information and Switching Regulator chapters
*G, July 2014	RJVB	Removed reference to the IMODIS bit and all information related to disabling of the IMO. Added D1 to Table 38-1.
*H, November 2014	ASRI	Updated Section E: System Resources on page 209: Updated Digital Clocks chapter on page 213: Updated "Architectural Description" on page 213: Updated "External Clock" on page 215: Updated description.
*I February 2021	RJVB	Obsolete document

OBSOLETE

Documentation Conventions

There are only four distinguishing font types used in this manual, besides those found in the headings.

- The first is the use of *italics* when referencing a document title or file name.
- The second is the use of ***bold italics*** when referencing a term described in the Glossary of this manual.
- The third is the use of Times New Roman font, distinguishing equation examples.
- The fourth is the use of `Courier New` font, distinguishing code examples.

Register Conventions

The following table lists the register conventions that are specific to this manual. A more detailed set of register conventions is located in the Register Details chapter on page 361.

Register Conventions

Convention	Example	Description
'x' in a register name	ACBxxCR1	Multiple instances/address ranges of the same register
R	R : 00	Read register or bit(s)
W	W : 00	Write register or bit(s)
L	RL : 00	Logical register or bit(s)
C	RC : 00	Clearable register or bit(s)
00	RW : 00	Reset value is 0x00 or 00h
XX	RW : XX	Register is not reset
0,	0,04h	Register is in bank 0
1,	1,23h	Register is in bank 1
x,	x,F7h	Register exists in register bank 0 and register bank 1
Empty, grayed-out table cell		Reserved bit or group of bits, unless otherwise stated

Numeric Naming

Hexadecimal numbers are represented with all letters in uppercase with an appended lowercase 'h' (for example, '14h' or '3Ah') and ***hexidecimal*** numbers may also be represented by a '0x' prefix, the ***C*** coding convention. Binary numbers have an appended lowercase 'b' (for example, 01010100b' or '01000011b'). Numbers not indicated by an 'h' or 'b' are ***decimal***.

Units of Measure

The following table lists the units of measure used in this manual.

Units of Measure

Symbol	Unit of Measure
A	amperes
°C	degrees Celsius
dB	decibels
fF	femtofarads
Hz	hertz
k	kilo, 1000
K	2^{10}, 1024
KB	1024 bytes
Kbit	1024 bits
kHz	kilohertz (32.000)
kΩ	kilohms
MHz	megahertz
MΩ	megaohms
µA	microamperes
µF	microfarads
µs	microseconds
µV	microvolts
µVrms	microvolts root-mean-square
µW	microwatts
mA	milliamperes
ms	milliseconds
mV	millivolts
mW	milliwatts
nA	nanoamperes
ns	nanoseconds
nV	nanovolts
Ω	ohms
pF	picofarads
pp	peak-to-peak
ppm	parts per million
sps	samples per second
σ	sigma: one standard deviation
V	volts
W	watts

OBSOLETE

Acronyms

The following table lists the acronyms that are used in this manual.

Acronyms

Acronym	Description
ABUS	analog output bus
AC	alternating current
ADC	analog-to-digital converter
API	Application Programming Interface
BC	broadcast clock
BR	bit rate
BRA	bus request acknowledge
BRQ	bus request
CBUS	comparator bus
CI	carry in
CMP	compare
CO	carry out
CPU	central processing unit
CRC	cyclic redundancy check
CSA	current sense amplifier
CT	continuous time
DAC	digital-to-analog converter
DC	direct current
DI	digital or data input
DMA	direct memory access
DMM	density modulated PWM modulation
DPWM	digital pulse width modulator
DO	digital or data output
FB	feedback
GDRV	gate driver
GIE	global interrupt enable
GPIO	general purpose I/O
ICE	in-circuit emulator
IDE	integrated development environment
ILO	internal low speed oscillator
IMO	internal main oscillator
I/O	input/output
IOR	I/O read
IOW	I/O write
IPOR	imprecise power on reset
IRQ	interrupt request
ISR	interrupt service routine
ISSP	in system serial programming
IVR	interrupt vector read
LFSR	linear feedback shift register
LRb	last received bit
LRB	last received byte
LSb	least significant bit
LSB	least significant byte
LUT	lookup table
MISO	master-in-slave-out
MOSI	master-out-slave-in

Acronyms *(continued)*

Acronym	Description
MSb	most significant bit
MSB	most significant byte
PC	program counter
PCH	program counter high
PCL	program counter low
PD	power down
PMA	PSoC® memory arbiter
POR	power on reset
PPOR	precision power on reset
PrISM™	precision illumination signal modulation
PRS	pseudo random sequence
PSoC®	Programmable System-on-Chip™
PSSDC	power system sleep duty cycle
PWM	pulse width modulator
RAM	random access memory
RETI	return from interrupt
RI	row input
RO	row output
ROM	read only memory
RW	read/write
SAR	successive approximation register
SC	switched capacitor
SIE	serial interface engine
SE0	single-ended zero
SOF	start of frame
SP	stack pointer
SPI	serial peripheral interconnect
SPIM	serial peripheral interconnect master
SPIS	serial peripheral interconnect slave
SRAM	static random access memory
SROM	supervisory read only memory
SSADC	single slope ADC
SSC	supervisory system call
TC	terminal count
USB	universal serial bus
UVLO	under voltage lockout
VDAC	voltage DAC
WDT	watchdog timer
WDR	watchdog reset
XRES	external reset

OBSOLETE

1. Pin Information

OBSOLETE

This chapter lists, describes, and illustrates all PowerPSoC device pins and pinout configurations. For up-to-date Ordering, Pinout, and Packaging information, refer to the individual PowerPSoC device data sheet at http://www.cypress.com/powerpsoc.

1.1 Pinouts

The PowerPSoC devices are available in a 56-pin QFN package. Refer to the following information for details on individual ***devices***. Every ***port*** pin (labeled with a “P”), except for ***Vss***, ***Vdd***, and XRES in the following tables and illustrations, is capable of Digital I/O. Note that if a PowerPSoC device pinout is different from what is listed in the All Devices column, the difference is listed in the individual PowerPSoC device column and also illustrated to the right of the table.

The CY8CLED04D01, CY8CLED04D02, CY8CLED03D01, CY8CLED03D02, CY8CLED02D01, CY8CLED01D01, CY8CLED04G01, and CY8CLED03G01 PowerPSoC devices are available with the following pinout information. Every port pin (labeled with a “P”) is capable of Digital I/O.

1.1.1 CY8CLED04D0x 56-Pin Part Pinout

The CY8CLED04D01 and CY8CLED04D02 PowerPSoC devices are available with the following pinout information. Every port pin (labeled with a “P” and “FN0”) is capable of Digital I/O.

Table 1-1. CY8CLED04D0x 56-Pin Part Pinout (QFN)

Pin No.	Type			Name	Description
	Digital	Analog	Voltage		
1	I/O	M	LV	P1[0][a]	GPIO, I2C SDATA (Secondary), ISSP (Primary)
2	I/O	I, M	LV	P2[2]	GPIO
3	I/O	I/O, M	LV	P0[3]	GPIO, Analog Input (COL0), Analog Output
4	I/O	I/O, M	LV	P0[5]	GPIO, Analog Input (COL0) and Analog Output (COL1), Cap-Sense Reference Capacitor
5	I/O	I, M	LV	P0[7]	GPIO
6	I/O	M	LV	P1[1][a]	GPIO, I2C SCLK (Secondary), ISSP (Primary)
7	I/O	M	LV	P1[5]	GPIO, I2C SDATA (Primary)
8	I/O	M	LV	P1[7]	GPIO, I2C SCLK (Primary)
9	Power		LV	Vss	Digital Ground
10				NC	No Connection
11				NC	No Connection
12				NC	No Connection
13				NC	No Connection
14	I		LV	XRES	External Reset
15	Power		LV	Vdd	Digital Power Supply
16	Power		LV	Vss	Digital Ground
17	Power		LV	AVss	Analog Ground
18	Power		LV	AVdd	Analog Power Supply
19		I	HV	CSN2	Current Sense Amplifier Negative Input Channel 2
20	Power		HV	CSP2	Current Sense Amplifier Positive Input Channel 2
21	Power		HV	CSP3	Current Sense Amplifier Positive Input Channel 3
22		I	HV	CSN3	Current Sense Amplifier Negative Input Channel 3
23		O	LV	SREGCOMP	Voltage Regulator Error Amplifier Compensation
24		I	LV	SREGFB	Voltage Regulator Mode Feedback Node
25		I	LV	SREGCSN	Current Mode Feedback Negative
26		I	LV	SREGCSP	Current Mode Feedback Positive
27	O		HV	SREGSW	Switch Mode Regulator OUT
28	Power		HV	SREGHVIN	Switch Mode Regulator IN
29	Power		LV	GDVdd	Gate Driver Supply Voltage
30	Power		LV	GDVss	Gate Driver Ground
31	Power		HV	PGND3	Channel 3 - Power FET Source
32	O		LV	GD3	Channel 3 - External Low Side Gate Driver
33	O		HV	SW3	Channel 3 - Power FET Drain
34	Power		HV	PGND2	Channel 2 - Power FET Source
35	O		LV	GD2	Channel 2 - External Low Side Gate Driver
36	O		HV	SW2	Channel 2 - Power FET Drain
37	O		HV	SW1	Channel 1 - Power FET Drain
38	O		LV	GD1	Channel 1 - External Low Side Gate Driver
39	Power		HV	PGND1	Channel 1 - Power FET Source
40	O		HV	SW0	Channel 0 - Power FET Drain
41	O		LV	GD0	Channel 0 - External Low Side Gate Driver
42	Power		HV	PGND0	Channel 0 - Power FET Source
43	Power		LV	GDVss	Gate Driver Ground
44	Power		LV	GDVdd	Gate Driver Supply Voltage
45	I/O	I	LV	FN0[0]	Function I/O
46	I/O	I	LV	FN0[1]	Function I/O
47	I/O	I	LV	FN0[2]	Function I/O
48	I/O	I	LV	FN0[3]	Function I/O
49		I	HV	CSN0	Current Sense Amplifier Negative Input Channel 0
50	Power		HV	CSP0	Current Sense Amplifier Positive Input Channel 0
51	Power		HV	CSP1	Current Sense Amplifier Positive Input Channel 1
52		I	HV	CSN1	Current Sense Amplifier Negative Input Channel 1
53	I/O	I, M	LV	P0[4]	GPIO, Connects to Analog Column (1), Bandgap Output
54	Power		LV	Vdd	Digital Power Supply Voltage
55	Power		LV	Vss	Digital Ground
56	I/O	M	LV	P1[4]	GPIO, External Clock Input

CY8CLED04D0x 56-Pin PowerPSoC Device

QFN Top View

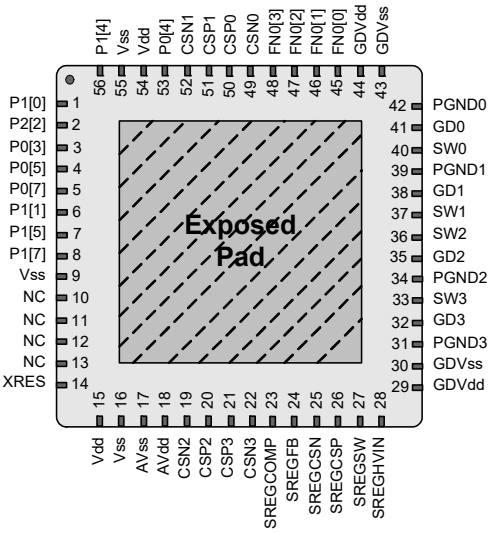

Connect exposed pad to PGNDx.

a. ISSP pin, which is not High Z at POR.

LEGEND I/O = Input/Output Type, M = Analog Multiplexer Input for CapSense, HV = High Voltage Pin, LV = Low Voltage Pin, Power = Supply/Ground Pins.

1.1.2 CY8CLED04G01 56-Pin Part Pinout

The CY8CLED04G01 PowerPSoC device is available with the following pinout information. Every port pin (labeled with a “P” and “FN0”) is capable of Digital I/O.

Table 1-2. CY8CLED04G01 56-Pin Part Pinout (QFN)

Pin No.	Type			Name	Description
	Digital	Analog	Voltage		
1	I/O	M	LV	P1[0][a]	GPIO, I2C SDATA (Secondary), ISSP (Primary)
2	I/O	I, M	LV	P2[2]	GPIO
3	I/O	I/O, M	LV	P0[3]	GPIO, Analog Input (COL0), Analog Output
4	I/O	I/O, M	LV	P0[5]	GPIO, Analog Input (COL0) and Analog Output (COL1), CapSense Reference Capacitor
5	I/O	I, M	LV	P0[7]	GPIO
6	I/O	M	LV	P1[1][a]	GPIO, I2C SCLK (Secondary), ISSP (Primary)
7	I/O	M	LV	P1[5]	GPIO, I2C SDATA (Primary)
8	I/O	M	LV	P1[7]	GPIO, I2C SCLK (Primary)
9	Power		LV	Vss	Digital Ground
10				NC	No Connection
11				NC	No Connection
12				NC	No Connection
13				NC	No Connection
14	I		LV	XRES	External Reset
15	Power		LV	Vdd	Digital Power Supply
16	Power		LV	Vss	Digital Ground
17	Power		LV	AVss	Analog Ground
18	Power		LV	AVdd	Analog Power Supply
19		I	HV	CSN2	Current Sense Amplifier Negative Input Channel 2
20	Power		HV	CSP2	Current Sense Amplifier Positive Input Channel 2
21	Power		HV	CSP3	Current Sense Amplifier Positive Input Channel 3
22		I	HV	CSN3	Current Sense Amplifier Negative Input Channel 3
23		O	LV	SREG-COMP	Voltage Regulator Error Amplifier Compensation
24		I	LV	SREGFB	Voltage Regulator Mode Feedback Node
25		I	LV	SREGCSN	Current Mode Feedback Negative
26		I	LV	SREGCSP	Current Mode Feedback Positive
27	O		HV	SREGSW	Switch Mode Regulator OUT
28	Power		HV	SREGHVIN	Switch Mode Regulator IN
29	Power		LV	GDVdd	Gate Driver Supply Voltage
30	Power		LV	GDVss	Gate Driver Ground
31	Power		HV	PGND3	Channel 3 - Power FET Source
32	O		LV	GD3	Channel 3 - External Low Side Gate Driver
33				DNC[b]	Do Not Connect
34	Power		HV	PGND2	Channel 2 - Power FET Source
35	O		LV	GD2	Channel 2 - External Low Side Gate Driver
36				DNC[b]	Do Not Connect
37				DNC[b]	Do Not Connect
38	O		LV	GD1	Channel 1 - External Low Side Gate Driver
39	Power		HV	PGND1	Channel 1 - Power FET Source
40				DNC[b]	Do Not Connect
41	O		LV	GD0	Channel 0 - External Low Side Gate Driver
42	Power		HV	PGND0	Channel 0 - Power FET Source
43	Power		LV	GDVss	Gate Driver Ground
44	Power		LV	GDVdd	Gate Driver Supply Voltage
45	I/O	I	LV	FN0[0]	Function I/O
46	I/O	I	LV	FN0[1]	Function I/O
47	I/O	I	LV	FN0[2]	Function I/O
48	I/O	I	LV	FN0[3]	Function I/O
49		I	HV	CSN0	Current Sense Amplifier Negative Input Channel 0
50	Power		HV	CSP0	Current Sense Amplifier Positive Input Channel 0
51	Power		HV	CSP1	Current Sense Amplifier Positive Input Channel 1
52		I	HV	CSN1	Current Sense Amplifier Negative Input Channel 1
53	I/O	I, M	LV	P0[4]	GPIO, Connects to Analog Column (1), Bandgap Output
54	Power		LV	Vdd	Digital Power Supply Voltage
55	Power		LV	Vss	Digital Ground
56	I/O	M	LV	P1[4]	GPIO, External Clock Input

CY8CLED04G01 56-Pin PowerPSoC Device

QFN Top View

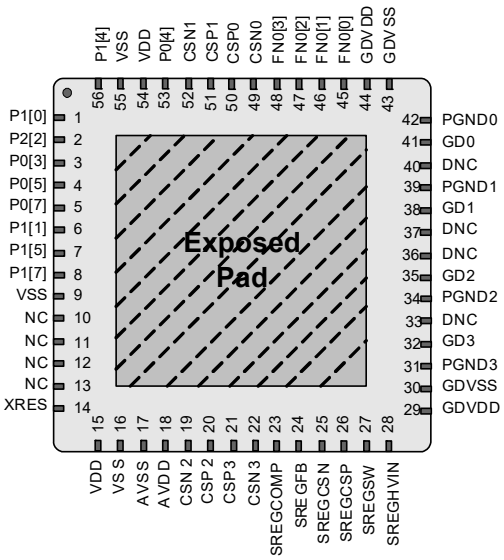

Connect exposed pad to PGNDx.

a. ISSP pin, which is not High Z at POR.
b. Do Not Connect (DNC) pins must be left unconnected or floating. Connecting these pins to power or ground may cause improper operation or failure of the device.

1.1.3 CY8CLED03D0x 56-Pin Part Pinout

The CY8CLED03D01 and CY8CLED03D02 PowerPSoC devices are available with the following pinout information. Every port pin (labeled with a “P” and “FN0”) is capable of Digital I/O.

Table 1-3. CY8CLED03D0x 56-Pin Part Pinout (QFN)

Pin No.	Type			Name	Description
	Digital	Analog	Voltage		
1	I/O	M	LV	P1[0][a]	GPIO, I2C SDATA (Secondary), ISSP (Primary)
2	I/O	I, M	LV	P2[2]	GPIO, Direct Switch Capacitor Connection
3	I/O	I/O, M	LV	P0[3]	GPIO, Analog Input (COL0), Analog Output
4	I/O	I/O, M	LV	P0[5]	GPIO, Analog Input (COL0) and Analog Output (COL1), CapSense Reference Capacitor
5	I/O	I, M	LV	P0[7]	GPIO, Connects to Analog Column, CapSense Reference Capacitor
6	I/O	M	LV	P1[1][a]	GPIO, I2C SCLK (Secondary), ISSP (Primary)
7	I/O	M	LV	P1[5]	GPIO, I2C SDATA (Primary)
8	I/O	M	LV	P1[7]	GPIO, I2C SCLK (Primary)
9	Power		LV	Vss	Digital Ground
10				NC	No Connect
11				NC	No Connect
12				NC	No Connect
13				NC	No Connect
14	I		LV	XRES	External Reset
15	Power		LV	Vdd	Digital Power Supply
16	Power		LV	Vss	Digital Ground
17	Power		LV	AVss	Analog Ground
18	Power		LV	AVdd	Analog Power Supply
19		I	HV	CSN2	Current Sense Amplifier Negative Input Channel 2
20	Power		HV	CSP2	Current Sense Amplifier Positive Input Channel 2
21				DNC[b]	Do Not Connect
22				DNC[b]	Do Not Connect
23		O	LV	SREGCOMP	Voltage Regulator Error Amp Comp
24		I	LV	SREGFB	Regulator Voltage Mode Feedback Node
25		I	LV	SREGCSN	Current Mode Feedback Negative
26		I	LV	SREGCSP	Current Mode Feedback Positive
27	O		HV	SREGSW	Switch Mode Regulator OUT
28	Power		HV	SREGHVIN	Switch Mode Regulator IN
29	Power		LV	GDVdd	Gate Driver Power Supply
30	Power		LV	GDVss	Gate Driver Ground
31	Power		HV	PGND3	Power FET Ground 3
32				DNC[b]	Do Not Connect
33				DNC[b]	Do Not Connect
34	Power		HV	PGND2	Power FET Ground 2
35	O		LV	GD2	External Low Side Gate Driver 2
36	O		HV	SW2	Power Switch 2
37	O		HV	SW1	Power Switch 1
38	O		LV	GD1	External Low Side Gate Driver 1
39	Power		HV	PGND1	Power FET Ground 1
40	O		HV	SW0	Power Switch 0
41	O		LV	GD0	External Low Side Gate Driver 0
42	Power		HV	PGND0	Power FET Ground 0
43	Power		LV	GDVss	Gate Driver Ground
44	Power		LV	GDVdd	Gate Driver Power Supply
45	I/O	I	LV	FN0[0]	Function I/O
46	I/O	I	LV	FN0[1]	Function I/O
47	I/O	I	LV	FN0[2]	Function I/O
48	I/O	I	LV	FN0[3]	Function I/O
49		I	HV	CSN0	Current Sense Amplifier Negative Input Channel 0
50	Power		HV	CSP0	Current Sense Amplifier Positive Input Channel 0
51	Power		HV	CSP1	Current Sense Amplifier Positive Input Channel 1
52		I	HV	CSN1	Current Sense Amplifier Negative Input Channel 1
53	I/O	I, M	LV	P0[4]	GPIO, Connects to Analog Column (1), Connects to Bandgap Output
54	Power		LV	Vdd	Digital Power Supply
55	Power		LV	Vss	Digital Ground
56	I/O	M	LV	P1[4]	GPIO, External Clock Input

CY8CLED03D0x 56-Pin PowerPSoC Device

QFN Top View

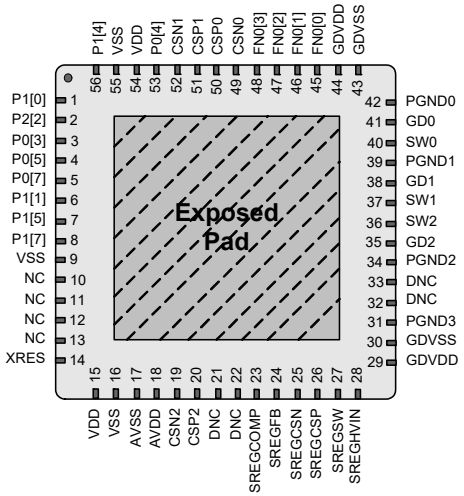

Connect exposed pad to PGNDx.

a. ISSP pin, which is not High Z at POR.
b. Do Not Connect (DNC) pins must be left unconnected or floating. Connecting these pins to power or ground may cause improper operation or failure of the device.

OBSOLETE

1.1.4 CY8CLED03G01 56-Pin Part Pinout

The CY8CLED03G01 PowerPSoC device is available with the following pinout information. Every port pin (labeled with a “P” and “FN0”) is capable of Digital I/O.

Table 1-4. CY8CLED03G01 56-Pin Part Pinout (QFN)

Pin No.	Type			Name	Description
	Digital	Analog	Voltage		
1	I/O	M	LV	P1[0][a]	GPIO, I2C SDATA (Secondary), ISSP (Primary)
2	I/O	I, M	LV	P2[2]	GPIO, Direct Switch Capacitor Connection
3	I/O	I/O, M	LV	P0[3]	GPIO, Analog Input (COL0), Analog Output
4	I/O	I/O, M	LV	P0[5]	GPIO, Analog Input (COL0) and Analog Output (COL1), CapSense Reference Capacitor
5	I/O	I, M	LV	P0[7]	GPIO, Connects to Analog Column, CapSense Reference Capacitor
6	I/O	M	LV	P1[1][a]	GPIO, I2C SCLK (Secondary), ISSP (Primary)
7	I/O	M	LV	P1[5]	GPIO, I2C SDATA (Primary)
8	I/O	M	LV	P1[7]	GPIO, I2C SCLK (Primary)
9	Power		LV	Vss	Digital Ground
10				NC	No Connect
11				NC	No Connect
12				NC	No Connect
13				NC	No Connect
14	I		LV	XRES	External Reset
15	Power		LV	Vdd	Digital Power Supply
16	Power		LV	Vss	Digital Ground
17	Power		LV	AVss	Analog Ground
18	Power		LV	AVdd	Analog Power Supply
19		I	HV	CSN2	Current Sense Amplifier Negative Input Channel 2
20	Power		HV	CSP2	Current Sense Amplifier Positive Input Channel 2
21				DNC[b]	Do Not Connect
22				DNC[b]	Do Not Connect
23		O	LV	SREGCOMP	Voltage Regulator Error Amp Comp
24		I	LV	SREGFB	Regulator Voltage Mode Feedback Node
25		I	LV	SREGCSN	Current Mode Feedback Negative
26		I	LV	SREGCSP	Current Mode Feedback Positive
27	O		HV	SREGSW	Switch Mode Regulator OUT
28	Power		HV	SREGHVIN	Switch Mode Regulator IN
29	Power		LV	GDVdd	Gate Driver Power Supply
30	Power		LV	GDVss	Gate Driver Ground
31	Power		HV	PGND3	Power FET Ground 3
32				DNC[b]	Do Not Connect
33				DNC[b]	Do Not Connect
34	Power		HV	PGND2	Power FET Ground 2
35	O		LV	GD2	External Low Side Gate Driver 2
36				DNC[b]	Do Not Connect
37				DNC[b]	Do Not Connect
38	O		LV	GD1	External Low Side Gate Driver 1
39	Power		HV	PGND1	Power FET Ground 1
40				DNC[b]	Do Not Connect
41	O		LV	GD0	External Low Side Gate Driver 0
42	Power		HV	PGND0	Power FET Ground 0
43	Power		LV	GDVss	Gate Driver Ground
44	Power		LV	GDVdd	Gate Driver Power Supply
45	I/O	I	LV	FN0[0]	Function I/O
46	I/O	I	LV	FN0[1]	Function I/O
47	I/O	I	LV	FN0[2]	Function I/O
48	I/O	I	LV	FN0[3]	Function I/O
49		I	HV	CSN0	Current Sense Amplifier Negative Input Channel 0
50	Power		HV	CSP0	Current Sense Amplifier Positive Input Channel 0
51	Power		HV	CSP1	Current Sense Amplifier Positive Input Channel 1
52		I	HV	CSN1	Current Sense Amplifier Negative Input Channel 1
53	I/O	I, M	LV	P0[4]	GPIO, Connects to Analog Column (1), Connects to Bandgap Output
54	Power		LV	Vdd	Digital Power Supply
55	Power		LV	Vss	Digital Ground
56	I/O	M	LV	P1[4]	GPIO, External Clock Input

CY8CLED03G01 56-Pin PowerPSoC Device

QFN Top View

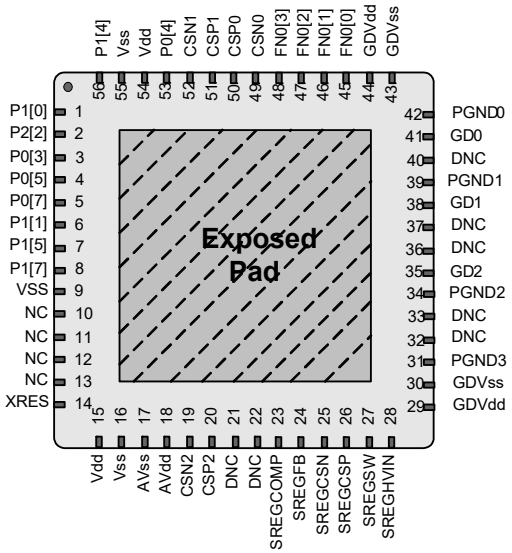

Connect exposed pad to PGNDx.

a. ISSP pin, which is not High Z at POR.
b. Do Not Connect (DNC) pins must be left unconnected or floating. Connecting these pins to power or ground may cause improper operation or failure of the device.

LEGEND I/O = Input/Output Type, M = Analog Multiplexer Input for CapSense, HV = High Voltage Pin, LV = Low Voltage Pin, Power = Supply/Ground Pins.

OBSOLETE

1.1.5 CY8CLED02D0x 56-Pin Part Pinout

The CY8CLED02D01 PowerPSoC devices are available with the following pinout information. Every port pin (labeled with a “P” and “FN0”) is capable of Digital I/O.

Table 1-5. CY8CLED02D0x 56-Pin Part Pinout (QFN)

Pin No.	Type			Name	Description
	Digital	Analog	Voltage		
1	I/O	M	LV	P1[0][a]	GPIO, I2C SDATA (Secondary), ISSP (Primary)
2	I/O	I, M	LV	P2[2]	GPIO, Direct Switch Capacitor Connection
3	I/O	I/O, M	LV	P0[3]	GPIO, Analog Input (COL0), Analog Output
4	I/O	I/O, M	LV	P0[5]	GPIO, Analog Input (COL0) and Analog Output (COL1), CapSense Reference Capacitor
5	I/O	I, M	LV	P0[7]	GPIO, Connects to Analog Column, CapSense Reference Capacitor
6	I/O	M	LV	P1[1][a]	GPIO, I2C SCLK (Secondary), ISSP (Primary)
7	I/O	M	LV	P1[5]	GPIO, I2C SDATA (Primary)
8	I/O	M	LV	P1[7]	GPIO, I2C SCLK (Primary)
9	Power		LV	Vss	Digital Ground
10				NC	No Connect
11				NC	No Connect
12				NC	No Connect
13				NC	No Connect
14	I		LV	XRES	External Reset
15	Power		LV	Vdd	Digital Power Supply
16	Power		LV	Vss	Digital Ground
17	Power		LV	AVss	Analog Ground
18	Power		LV	AVdd	Analog Power Supply
19				DNC[b]	Do Not Connect
20				DNC[b]	Do Not Connect
21				DNC[b]	Do Not Connect
22				DNC[b]	Do Not Connect
23		O	LV	SREGCOMP	Voltage Regulator Error Amp Comp
24		I	LV	SREGFB	Regulator Voltage Mode Feedback Node
25		I	LV	SREGCSN	Current Mode Feedback Negative
26		I	LV	SREGCSP	Current Mode Feedback Positive
27	O		HV	SREGSW	Switch Mode Regulator OUT
28	Power		HV	SREGHVIN	Switch Mode Regulator IN
29	Power		LV	GDVdd	Gate Driver Power Supply
30	Power		LV	GDVss	Gate Driver Ground
31	Power		HV	PGND3	Power FET Ground 3
32				DNC[b]	Do Not Connect
33				DNC[b]	Do Not Connect
34	Power		HV	PGND2	Power FET Ground 2
35				DNC[b]	Do Not Connect
36				DNC[b]	Do Not Connect
37	O		HV	SW1	Power Switch 1
38	O		LV	GD1	External Low Side Gate Driver 1
39	Power		HV	PGND1	Power FET Ground 1
40	O		HV	SW0	Power Switch 0
41	O		LV	GD0	External Low Side Gate Driver 0
42	Power		HV	PGND0	Power FET Ground 0
43	Power		LV	GDVss	Gate Driver Ground
44	Power		LV	GDVdd	Gate Driver Power Supply
45	I/O	I	LV	FN0[0]	Function I/O
46	I/O	I	LV	FN0[1]	Function I/O
47	I/O	I	LV	FN0[2]	Function I/O
48	I/O	I	LV	FN0[3]	Function I/O
49		I	HV	CSN0	Current Sense Amplifier Negative Input Channel 0
50	Power		HV	CSP0	Current Sense Amplifier Positive Input Channel 0
51	Power		HV	CSP1	Current Sense Amplifier Positive Input Channel 1
52		I	HV	CSN1	Current Sense Amplifier Negative Input Channel 1
53	I/O	I, M	LV	P0[4]	GPIO, Connects to Analog Column (1), Connects to Bandgap Output
54	Power		LV	Vdd	Digital Power Supply
55	Power		LV	Vss	Digital Ground
56	I/O	M	LV	P1[4]	GPIO, External Clock Input

CY8CLED02D0x 56-Pin PowerPSoC Device

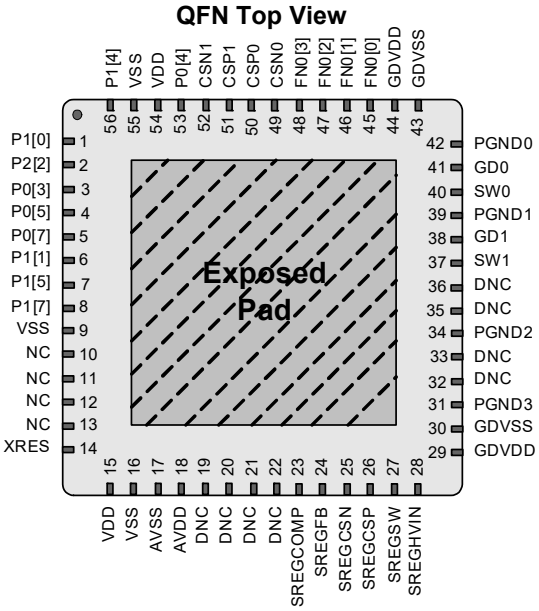

Connect exposed pad to PGNDx.

a. ISSP pin, which is not High Z at POR.
b. Do Not Connect (DNC) pins must be left unconnected or floating. Connecting these pins to power or ground may cause improper operation or failure of the device.

1.1.6 CY8CLED01D0x 56-Pin Part Pinout

The CY8CLED01D01 PowerPSoC device is available with the following pinout information. Every port pin (labeled with a “P” and “FN0”) is capable of Digital I/O

Table 1-6. CY8CLED01D0x 56-Pin Part Pinout (QFN)

Pin No.	Type			Name	Description
	Digital	Analog	Voltage		
1	I/O	M	LV	P1[0][a]	GPIO, I2C SDATA (Secondary), ISSP (Primary)
2	I/O	I, M	LV	P2[2]	GPIO, Direct Switch Capacitor Connection
3	I/O	I/O, M	LV	P0[3]	GPIO, Analog Input (COL0), Analog Output
4	I/O	I/O, M	LV	P0[5]	GPIO, Analog Input (COL0) and Analog Output (COL1), CapSense Reference Capacitor
5	I/O	I, M	LV	P0[7]	GPIO, Connects to Analog Column, CapSense Reference Capacitor
6	I/O	M	LV	P1[1][a]	GPIO, I2C SCLK (Secondary), ISSP (Primary)
7	I/O	M	LV	P1[5]	GPIO, I2C SDATA (Primary)
8	I/O	M	LV	P1[7]	GPIO, I2C SCLK (Primary)
9	Power		LV	Vss	Digital Ground
10				NC	No Connect
11				NC	No Connect
12				NC	No Connect
13				NC	No Connect
14	I		LV	XRES	External Reset
15	Power		LV	Vdd	Digital Power Supply
16	Power		LV	Vss	Digital Ground
17	Power		LV	AVss	Analog Ground
18	Power		LV	AVdd	Analog Power Supply
19				DNC[b]	Do Not Connect
20				DNC[b]	Do Not Connect
21				DNC[b]	Do Not Connect
22				DNC[b]	Do Not Connect
23		O	LV	SREGCOMP	Voltage Regulator Error Amp Comp
24		I	LV	SREGFB	Regulator Voltage Mode Feedback Node
25		I	LV	SREGCSN	Current Mode Feedback Negative
26		I	LV	SREGCSP	Current Mode Feedback Positive
27	O		HV	SREGSW	Switch Mode Regulator OUT
28	Power		HV	SREGHVIN	Switch Mode Regulator IN
29	Power		LV	GDVdd	Gate Driver Power Supply
30	Power		LV	GDVss	Gate Driver Ground
31	Power		HV	PGND3	Power FET Ground 3
32				DNC[b]	Do Not Connect
33				DNC[b]	Do Not Connect
34	Power		HV	PGND2	Power FET Ground 2
35				DNC[b]	Do Not Connect
36				DNC[b]	Do Not Connect
37				DNC[b]	Do Not Connect
38				DNC[b]	Do Not Connect
39	Power		HV	PGND1	Power FET Ground 1
40	O		HV	SW0	Power Switch 0
41	O		LV	GD0	External Low Side Gate Driver 0
42	Power		HV	PGND0	Power FET Ground 0
43	Power		LV	GDVss	Gate Driver Ground
44	Power		LV	GDVdd	Gate Driver Power Supply
45	I/O	I	LV	FN0[0]	Function I/O
46	I/O	I	LV	FN0[1]	Function I/O
47	I/O	I	LV	FN0[2]	Function I/O
48	I/O	I	LV	FN0[3]	Function I/O
49		I	HV	CSN0	Current Sense Amplifier Negative Input Channel 0
50	Power		HV	CSP0	Current Sense Amplifier Positive Input Channel 0
51				DNC[b]	Do Not Connect
52				DNC[b]	Do Not Connect
53	I/O	I, M	LV	P0[4]	GPIO, Connects to Analog Column (1), Connects to Bandgap Output
54	Power		LV	Vdd	Digital Power Supply
55	Power		LV	Vss	Digital Ground
56	I/O	M	LV	P1[4]	GPIO, External Clock Input

CY8CLED01D0x 56-Pin PowerPSoC Device

QFN Top View

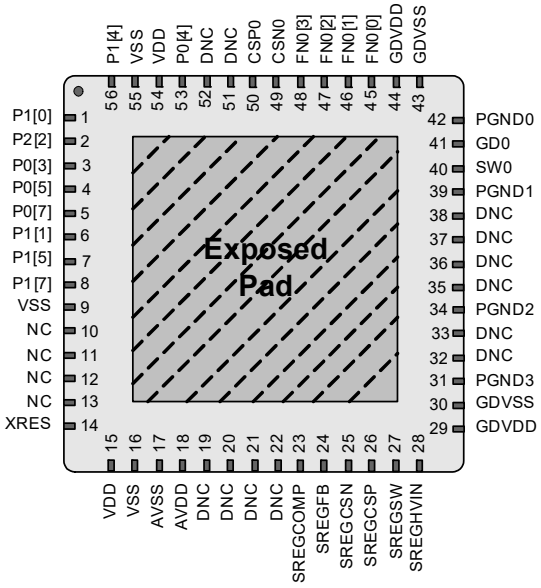

Connect exposed pad to PGNDx.

a. ISSP pin, which is not High Z at POR.
b. Do Not Connect (DNC) pins must be left unconnected or floating. Connecting these pins to power or ground may cause improper operation or failure of the device.

OBSOLETE

Section B: PSoC Core

The PSoC Core section discusses the core components of CY8CLED0xx0x PowerPSoC devices and the registers associated with those components. This section encompasses the following chapters:

- CPU Core (M8C) on page 43
- Supervisory ROM (SROM) on page 53
- RAM Paging on page 63
- Interrupt Controller on page 71
- General Purpose I/O (GPIO) on page 79
- Analog Output Drivers on page 87
- Internal Main Oscillator (IMO) on page 89
- Internal Low Speed Oscillator (ILO) on page 91
- Sleep and Watchdog on page 93

Top Level Core Architecture

Figure displays the top level architecture of the PSoC core. Each component is discussed at length in this section.

PSoC Core Block Diagram

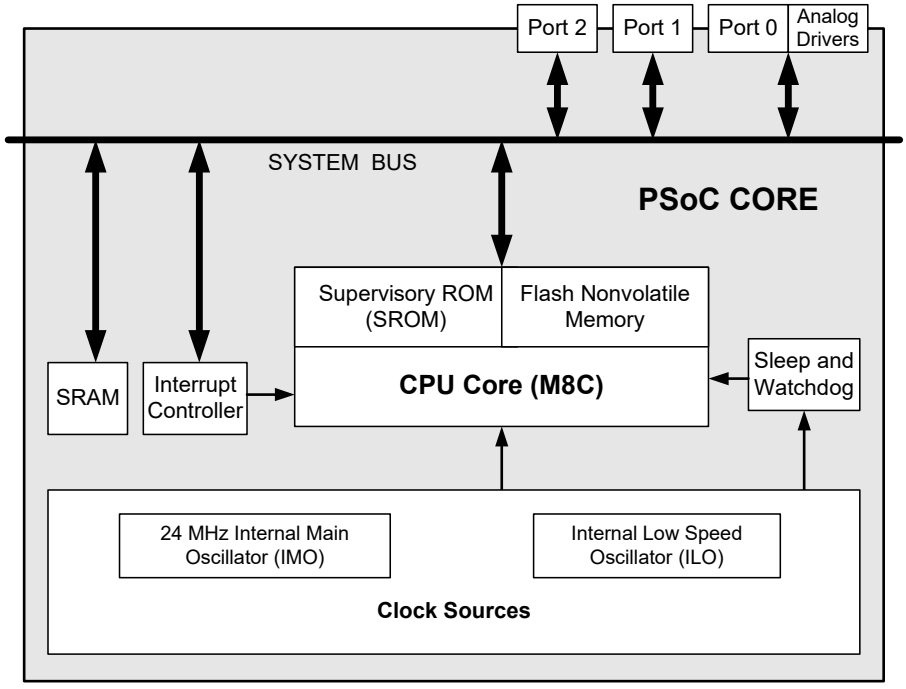

Interpreting Core Documentation

The core section covers the heart of the PowerPSoC device, which includes the M8C ***microcontroller***; SROM, interrupt controller, GPIO, analog output drivers, and ***SRAM*** paging; multiple clock sources such as IMO and ILO; and sleep and watchdog functionality.

The ***analog output*** drivers are described in this section and not the Analog System section because they are part of the PSoC core input and ***output*** signals.

PowerPSoC GPIO

The GPIO contains input buffers, output drivers; register bit storage, and configuration logic for connecting the PowerPSoC device to the outside world. I/O ports are arranged with (up to) 8 bits per port. Each full port contains 8 identical GPIO blocks, with connections to identify a unique address and register bit number for each block

There are four GPIO ports in the CY8CLED0xx0x, Port 0, Port 1, Port 2, and FN0. Ports 0, 1, and 2 have the same functionality as any PSoC GPIO port for CY8CLED0xx0x devices.

FN0 is 4 bits wide and is different from the other three ports. FN0 is dedicated to the Power Peripherals of the CY8-CLED0xx0x and does not communicate with PSoC Core. This port will not be part of GLOBAL BUS (GIO/GOO). FN0 is connected to the Power Peripherals via digital and analog multiplexers. The only communication from FN0 is in generating interrupts, which are wired, OR, with other ports. This is similar to any other PSoC device.

OBSOLETE

Core Register Summary

The table below lists all the PowerPSoC registers for the CPU core in ***address*** order within their system resource configuration. The bits that are grayed out are reserved bits. If these bits are written, they should always be written with a value of '0'. For the core registers, the first 'x' in some ***register*** addresses represents either bank 0 or bank 1. These registers are listed throughout this manual in bank 0, even though they are also available in bank 1.

Note that the CY8CLED0xx0x PowerPSoC devices have 2 analog columns and 2 digital rows. The registers that are specifically constrained by the number of analog columns have the number of analog columns (Cols.) listed within the Address column of the table. The registers specifically pertaining to digital rows have the number of rows (Rows) listed within the Address column of the table.

Summary Table of the Core Registers

Address	Name	Bit 7	Bit 6	Bit 5	Bit 4	Bit 3	Bit 2	Bit 1	Bit 0	Access
M8C REGISTER (page 52)										
x,F7h	CPU_F	PgMode[1:0]			XIO		Carry	Zero	GIE	RL : 02
SUPERVISORY ROM (SROM) REGISTERS (page 59)										
0,D1h	STK_PP						Page Bits[2:0]			RW : 0
0,D4h	MVR_PP						Page Bits[2:0]			RW : 0
0,D5h	MVW_PP						Page Bits[2:0]			RW : 0
x,FEh	CPU_SCR1	IRESS							IRAMDIS	# : 00
RAM PAGING (SRAM) REGISTERS (page 66)										
x,6Ch	TMP_DR0	Data[7:0]								RW : 00
x,6Dh	TMP_DR1	Data[7:0]								RW : 00
x,6Eh	TMP_DR2	Data[7:0]								RW : 00
x,6Fh	TMP_DR3	Data[7:0]								RW : 00
0,D0h	CUR_PP						Page Bits[2:0]			RW : 0
0,D1h	STK_PP						Page Bits[2:0]			RW : 0
0,D3h	IDX_PP						Page Bits[2:0]			RW : 0
0,D4h	MVR_PP						Page Bits[2:0]			RW : 0
0,D5h	MVW_PP						Page Bits[2:0]			RW : 0
x,F7h	CPU_F	PgMode[1:0]			XIO		Carry	Zero	GIE	RL : 02
INTERRUPT CONTROLLER REGISTERS (page 74)										
0,DAh	INT_CLR0	VC3	Sleep	GPIO	UVLO		Analog 1	Analog 0	V Monitor	RW : 00
0,DBh	INT_CLR1	DCB13	DCB12	DBB11	DBB10	DCB03	DCB02	DBB01	DBB00	RW : 00
0,DCh	INT_CLR2	PWMLP	PWMHP	CMP13	CMP12	CMP11	CMP10	CMP9	CMP8	RW : 00
0,DDh	INT_CLR3								I2C	RW : 0
0,DEh	INT_MSK3	ENSWINT							I2C	RW : 0
0,DFh	INT_MSK2	PWMLP	PWMHP	CMP13	CMP12	CMP11	CMP10	CMP9	CMP8	RW : 00
0,E0	INT_MSK0	VC3	Sleep	GPIO	UVLO		Analog 1	Analog 0	V Monitor	RW : 00
0,E1h	INT_MSK1	DCB13	DCB12	DBB11	DBB10	DCB03	DCB02	DBB01	DBB00	RW : 00
0,E2h	INT_VC	Pending Interrupt[7:0]								RC : 00
x,F7h	CPU_F	PgMode[1:0]			XIO		Carry	Zero	GIE	RL : 02
GENERAL PURPOSE I/O (GPIO) REGISTERS (page 83)										
0,00h	PRT0DR	Data[7:0]								RW : 00
0,01h	PRT0IE	Interrupt Enables[7:0]								RW : 00
0,02h	PRT0GS	Global Select[7:0]								RW : 00
0,03h	PRT0DM2	Drive Mode 2[7:0]								RW : FF
1,00h	PRT0DM0	Drive Mode 0[7:0]								RW : 00
1,01h	PRT0DM1	Drive Mode 1[7:0]								RW : FF
1,02h	PRT0IC0	Interrupt Control 0[7:0]								RW : 00
1,03h	PRT0IC1	Interrupt Control 1[7:0]								RW : 00
0,04h	PRT1DR	Data[7:0]								RW : 00

Summary Table of the Core Registers *(continued)*

Address	Name	Bit 7	Bit 6	Bit 5	Bit 4	Bit 3	Bit 2	Bit 1	Bit 0	Access
0,05h	PRT1IE	Interrupt Enables[7:0]								RW : 00
0,06h	PRT1GS	Global Select[7:0]								RW : 00
0,07h	PRT1DM2	Drive Mode 2[7:0]								RW : FF
1,04h	PRT1DM0	Drive Mode 0[7:0]								RW : 00
1,05h	PRT1DM1	Drive Mode 1[7:0]								RW : FF
1,06h	PRT1IC0	Interrupt Control 0[7:0]								RW : 00
1,07h	PRT1IC1	Interrupt Control 1[7:0]								RW : 00
0,08h	PRT2DR	Data[7:0]								RW : 00
0,09h	PRT2IE	Interrupt Enables[7:0]								RW : 00
0,0Ah	PRT2GS	Global Select[7:0]								RW : 00
0,0Bh	PRT2DM2	Drive Mode 2[7:0]								RW : FF
1,08h	PRT2DM0	Drive Mode 0[7:0]								RW : 00
1,09h	PRT2DM1	Drive Mode 1[7:0]								RW : FF
1,0Ah	PRT2IC0	Interrupt Control 0[7:0]								RW : 00
1,0Bh	PRT2IC1	Interrupt Control 1[7:0]								RW : 00
0,0Ch	FN0DR	Data[7:0]								RW : 00
0,0Dh	FN0IE	Interrupt Enables[7:0]								RW : 00
0,0Eh	FN0GS	Global Select[7:0]								RW : 00
0,0Fh	FN0DM2	Drive Mode 2[7:0]								RW : FF
1,0Ch	FN0DM0	Drive Mode 0[7:0]								RW : 00
1,0Dh	FN0DM1	Drive Mode 1[7:0]								RW : FF
1,0Eh	FN0IC0	Interrupt Control 0[7:0]								RW : 00
1,0Fh	FN0IC1	Interrupt Control 1[7:0]								RW : 00
ANALOG OUTPUT DRIVER REGISTER (page 88)										
1,62h	ABF_CR0	ACol1Mux		ABUF1EN		ABUF0EN		Bypass	PWR	RW : 00
INTERNAL MAIN OSCILLATOR (IMO) REGISTERS (page 89)										
x,FEh	CPU_SCR1	IRESS							IRAMDIS	# : 0
1,E2h	OSC_CR2						EXTCLKEN	RSVD	SYSCLKX-2DIS	RW : 0
1,E8h	IMO_TR	Trim[7:0]								RW : 00
INTERNAL LOW SPEED OSCILLATOR (ILO) REGISTER (page 91)										
1,E9h	ILO_TR			Bias Trim[1:0]		Freq Trim[3:0]				W : 00
SLEEP AND WATCHDOG REGISTERS (page 95)										
0,E0h.	INT_MSK0	VC3	Sleep	GPIO	UVLO		Analog 1	Analog 0	V Monitor	RW : 00
0,E3h	RES_WDT	WDSL_Clear[7:0]								W : 00
x,FEh	CPU_SCR1	IRESS							IRAMDIS	# : 0
x,FFh	CPU_SCR0	GIES		WDRS	PORS	Sleep			STOP	# : XX
1,E0h	OSC_CR0			No Buzz	Sleep[1:0]		CPU Speed[2:0]			RW : 00
1,E9h	ILO_TR			Bias Trim[1:0]		Freq Trim[3:0]				W : 00

LEGEND
L The and f, expr; or f, expr; and xor f, expr instructions can be used to modify this register.
Access is bit specific. Refer to the Register Details chapter on page 361 for additional information.
X The value for power on reset is unknown.
x An “x” before the comma in the address field indicates that this register can be accessed or written to no matter what bank is used.
C Clearable register or bit(s).
R Read register or bit(s).
W Write register or bit(s).

OBSOLETE

2. CPU Core (M8C)

This chapter explains the CPU Core, called M8C, and its associated register. It covers the internal M8C registers, address spaces, ***instruction*** formats, and addressing modes. For additional information concerning the M8C instruction set, refer to the *PSoC Designer Assembly Language User Guide* available at the Cypress web site (http://www.cypress.com/powerpsoc). For a complete table of the CPU Core registers, refer to the "Summary Table of the Core Registers" on page 41. For a quick reference of all PowerPSoC registers in address order, refer to the Register Details chapter on page 361.

2.1 Overview

The ***M8C*** is a four MIPS 8-bit Harvard architecture microprocessor. Selectable processor clock speeds from 93.7 kHz to 24 MHz allow the M8C to be tuned to a particular application's performance and power requirements. The M8C supports a rich instruction set which allows for efficient low level language support.

2.2 Internal Registers

The M8C has five internal registers that are used in program execution. The following is a list of these registers.

- Accumulator (A)
- Index (X)
- Program Counter (PC)
- Stack Pointer (SP)
- Flags (F)

All of the internal M8C registers are eight bits in width, except for the PC which is 16 bits wide. Upon ***reset***, A, X, PC, and SP are reset to 00h. The Flag register (F) is reset to 02h, indicating that the Z ***flag*** is ***set***.

With each ***stack*** operation, the SP is automatically incremented or decremented so that it always points to the next stack ***byte*** in RAM. If the last byte in the stack is at address FFh, the ***stack pointer*** will wrap to RAM address 00h. It is the ***firmware*** developer's responsibility to ensure that the stack does not overlap with user-defined variables in RAM.

With the exception of the F register, the M8C internal registers are not accessible via an explicit register address. The internal M8C registers are accessed using the following instructions:

- `MOV A, expr`
- `MOV X, expr`
- `SWAP A, SP`
- `OR F, expr`
- `JMP LABEL`

The F register can be read by using address F7h in either register bank.

2.3 Address Spaces

The M8C has three address spaces: ***ROM***, ***RAM***, and registers. The ROM address space includes the supervisory ROM (SROM) and the Flash. The ROM address space is accessed via its own address and ***data bus***.

The ROM address space is composed of the Supervisory ROM and the on-chip Flash program store. Flash is organized into 64-byte blocks. The user need not be concerned with program store page boundaries, as the M8C automatically increments the 16-bit PC on every instruction making the block boundaries invisible to user code. Instructions occurring on a 256-byte Flash page boundary (with the exception of jmp instructions) incur an extra M8C clock cycle, as the upper byte of the PC is incremented.

The register address space is used to configure the PowerPSoC microcontroller's programmable blocks. It consists of two banks of 256 bytes each. To switch between banks, the XIO bit in the Flag register is set or cleared (set for Bank1, cleared for Bank0). The common convention is to leave the bank set to Bank0 (XIO cleared), switch to Bank1 as needed (set XIO), then switch back to Bank0.

OBSOLETE

2.4 Instruction Set Summary

The instruction set is summarized in both Table 2-1 and Table 2-2 (in numeric and ***mnemonic*** order, respectively), and serves as a quick reference. If more information is needed, the Instruction Set Summary tables are described in detail in the *PSoC Designer Assembly Language User Guide* (refer to the http://www.cypress.com/powerpsoc web site).

Table 2-1. Instruction Set Summary Sorted Numerically by Opcode

Opcode Hex	Cycles	Bytes	Instruction Format	Flags	Opcode Hex	Cycles	Bytes	Instruction Format	Flags	Opcode Hex	Cycles	Bytes	Instruction Format	Flags
00	15	1	SSC		2D	8	2	OR [X+expr], A	Z	5A	5	2	MOV [expr], X	
01	4	2	ADD A, expr	C, Z	2E	9	3	OR [expr], expr	Z	5B	4	1	MOV A, X	Z
02	6	2	ADD A, [expr]	C, Z	2F	10	3	OR [X+expr], expr	Z	5C	4	1	MOV X, A	
03	7	2	ADD A, [X+expr]	C, Z	30	9	1	HALT		5D	6	2	MOV A, reg[expr]	Z
04	7	2	ADD [expr], A	C, Z	31	4	2	XOR A, expr	Z	5E	7	2	MOV A, reg[X+expr]	Z
05	8	2	ADD [X+expr], A	C, Z	32	6	2	XOR A, [expr]	Z	5F	10	3	MOV [expr], [expr]	
06	9	3	ADD [expr], expr	C, Z	33	7	2	XOR A, [X+expr]	Z	60	5	2	MOV reg[expr], A	
07	10	3	ADD [X+expr], expr	C, Z	34	7	2	XOR [expr], A	Z	61	6	2	MOV reg[X+expr], A	
08	4	1	PUSH A		35	8	2	XOR [X+expr], A	Z	62	8	3	MOV reg[expr], expr	
09	4	2	ADC A, expr	C, Z	36	9	3	XOR [expr], expr	Z	63	9	3	MOV reg[X+expr], expr	
0A	6	2	ADC A, [expr]	C, Z	37	10	3	XOR [X+expr], expr	Z	64	4	1	ASL A	C, Z
0B	7	2	ADC A, [X+expr]	C, Z	38	5	2	ADD SP, expr		65	7	2	ASL [expr]	C, Z
0C	7	2	ADC [expr], A	C, Z	39	5	2	CMP A, expr	if (A=B) Z=1 if (A<B) C=1	66	8	2	ASL [X+expr]	C, Z
0D	8	2	ADC [X+expr], A	C, Z	3A	7	2	CMP A, [expr]		67	4	1	ASR A	C, Z
0E	9	3	ADC [expr], expr	C, Z	3B	8	2	CMP A, [X+expr]		68	7	2	ASR [expr]	C, Z
0F	10	3	ADC [X+expr], expr	C, Z	3C	8	3	CMP [expr], expr		69	8	2	ASR [X+expr]	C, Z
10	4	1	PUSH X		3D	9	3	CMP [X+expr], expr		6A	4	1	RLC A	C, Z
11	4	2	SUB A, expr	C, Z	3E	10	2	MVI A, [[expr]++]	Z	6B	7	2	RLC [expr]	C, Z
12	6	2	SUB A, [expr]	C, Z	3F	10	2	MVI [[expr]++], A		6C	8	2	RLC [X+expr]	C, Z
13	7	2	SUB A, [X+expr]	C, Z	40	4	1	NOP		6D	4	1	RRC A	C, Z
14	7	2	SUB [expr], A	C, Z	41	9	3	AND reg[expr], expr	Z	6E	7	2	RRC [expr]	C, Z
15	8	2	SUB [X+expr], A	C, Z	42	10	3	AND reg[X+expr], expr	Z	6F	8	2	RRC [X+expr]	C, Z
16	9	3	SUB [expr], expr	C, Z	43	9	3	OR reg[expr], expr	Z	70	4	2	AND F, expr	C, Z
17	10	3	SUB [X+expr], expr	C, Z	44	10	3	OR reg[X+expr], expr	Z	71	4	2	OR F, expr	C, Z
18	5	1	POP A	Z	45	9	3	XOR reg[expr], expr	Z	72	4	2	XOR F, expr	C, Z
19	4	2	SBB A, expr	C, Z	46	10	3	XOR reg[X+expr], expr	Z	73	4	1	CPL A	Z
1A	6	2	SBB A, [expr]	C, Z	47	8	3	TST [expr], expr	Z	74	4	1	INC A	C, Z
1B	7	2	SBB A, [X+expr]	C, Z	48	9	3	TST [X+expr], expr	Z	75	4	1	INC X	C, Z
1C	7	2	SBB [expr], A	C, Z	49	9	3	TST reg[expr], expr	Z	76	7	2	INC [expr]	C, Z
1D	8	2	SBB [X+expr], A	C, Z	4A	10	3	TST reg[X+expr], expr	Z	77	8	2	INC [X+expr]	C, Z
1E	9	3	SBB [expr], expr	C, Z	4B	5	1	SWAP A, X	Z	78	4	1	DEC A	C, Z
1F	10	3	SBB [X+expr], expr	C, Z	4C	7	2	SWAP A, [expr]	Z	79	4	1	DEC X	C, Z
20	5	1	POP X		4D	7	2	SWAP X, [expr]		7A	7	2	DEC [expr]	C, Z
21	4	2	AND A, expr	Z	4E	5	1	SWAP A, SP	Z	7B	8	2	DEC [X+expr]	C, Z
22	6	2	AND A, [expr]	Z	4F	4	1	MOV X, SP		7C	13	3	LCALL	
23	7	2	AND A, [X+expr]	Z	50	4	2	MOV A, expr	Z	7D	7	3	LJMP	
24	7	2	AND [expr], A	Z	51	5	2	MOV A, [expr]	Z	7E	10	1	RETI	C, Z
25	8	2	AND [X+expr], A	Z	52	6	2	MOV A, [X+expr]	Z	7F	8	1	RET	
26	9	3	AND [expr], expr	Z	53	5	2	MOV [expr], A		8x	5	2	JMP	
27	10	3	AND [X+expr], expr	Z	54	6	2	MOV [X+expr], A		9x	11	2	CALL	
28	11	1	ROMX	Z	55	8	3	MOV [expr], expr		Ax	5	2	JZ	
29	4	2	OR A, expr	Z	56	9	3	MOV [X+expr], expr		Bx	5	2	JNZ	
2A	6	2	OR A, [expr]	Z	57	4	2	MOV X, expr		Cx	5	2	JC	
2B	7	2	OR A, [X+expr]	Z	58	6	2	MOV X, [expr]		Dx	5	2	JNC	
2C	7	2	OR [expr], A	Z	59	7	2	MOV X, [X+expr]		Ex	7	2	JACC	
										Fx	13	2	INDEX	Z

Note 1 Interrupt acknowledge to Interrupt Vector table = 13 cycles.

Note 2 The number of cycles required by an instruction is increased by one for instructions that span 256 byte page boundaries in the Flash memory space.

Table 2-2. Instruction Set Summary Sorted Alphabetically by Mnemonic

Opcode Hex	Cycles	Bytes	Instruction Format	Flags	Opcode Hex	Cycles	Bytes	Instruction Format	Flags	Opcode Hex	Cycles	Bytes	Instruction Format	Flags
09	4	2	ADC A, expr	C, Z	76	7	2	INC [expr]	C, Z	20	5	1	POP X	
0A	6	2	ADC A, [expr]	C, Z	77	8	2	INC [X+expr]	C, Z	18	5	1	POP A	Z
0B	7	2	ADC A, [X+expr]	C, Z	Fx	13	2	INDEX	Z	10	4	1	PUSH X	
0C	7	2	ADC [expr], A	C, Z	Ex	7	2	JACC		08	4	1	PUSH A	
0D	8	2	ADC [X+expr], A	C, Z	Cx	5	2	JC		7E	10	1	RETI	C, Z
0E	9	3	ADC [expr], expr	C, Z	8x	5	2	JMP		7F	8	1	RET	
0F	10	3	ADC [X+expr], expr	C, Z	Dx	5	2	JNC		6A	4	1	RLC A	C, Z
01	4	2	ADD A, expr	C, Z	Bx	5	2	JNZ		6B	7	2	RLC [expr]	C, Z
02	6	2	ADD A, [expr]	C, Z	Ax	5	2	JZ		6C	8	2	RLC [X+expr]	C, Z
03	7	2	ADD A, [X+expr]	C, Z	7C	13	3	LCALL		28	11	1	ROMX	Z
04	7	2	ADD [expr], A	C, Z	7D	7	3	LJMP		6D	4	1	RRC A	C, Z
05	8	2	ADD [X+expr], A	C, Z	4F	4	1	MOV X, SP		6E	7	2	RRC [expr]	C, Z
06	9	3	ADD [expr], expr	C, Z	50	4	2	MOV A, expr	Z	6F	8	2	RRC [X+expr]	C, Z
07	10	3	ADD [X+expr], expr	C, Z	51	5	2	MOV A, [expr]	Z	19	4	2	SBB A, expr	C, Z
38	5	2	ADD SP, expr		52	6	2	MOV A, [X+expr]	Z	1A	6	2	SBB A, [expr]	C, Z
21	4	2	AND A, expr	Z	53	5	2	MOV [expr], A		1B	7	2	SBB A, [X+expr]	C, Z
22	6	2	AND A, [expr]	Z	54	6	2	MOV [X+expr], A		1C	7	2	SBB [expr], A	C, Z
23	7	2	AND A, [X+expr]	Z	55	8	3	MOV [expr], expr		1D	8	2	SBB [X+expr], A	C, Z
24	7	2	AND [expr], A	Z	56	9	3	MOV [X+expr], expr		1E	9	3	SBB [expr], expr	C, Z
25	8	2	AND [X+expr], A	Z	57	4	2	MOV X, expr		1F	10	3	SBB [X+expr], expr	C, Z
26	9	3	AND [expr], expr	Z	58	6	2	MOV X, [expr]		00	15	1	SSC	
27	10	3	AND [X+expr], expr	Z	59	7	2	MOV X, [X+expr]		11	4	2	SUB A, expr	C, Z
70	4	2	AND F, expr	C, Z	5A	5	2	MOV [expr], X		12	6	2	SUB A, [expr]	C, Z
41	9	3	AND reg[expr], expr	Z	5B	4	1	MOV A, X	Z	13	7	2	SUB A, [X+expr]	C, Z
42	10	3	AND reg[X+expr], expr	Z	5C	4	1	MOV X, A		14	7	2	SUB [expr], A	C, Z
64	4	1	ASL A	C, Z	5D	6	2	MOV A, reg[expr]	Z	15	8	2	SUB [X+expr], A	C, Z
65	7	2	ASL [expr]	C, Z	5E	7	2	MOV A, reg[X+expr]	Z	16	9	3	SUB [expr], expr	C, Z
66	8	2	ASL [X+expr]	C, Z	5F	10	3	MOV [expr], [expr]		17	10	3	SUB [X+expr], expr	C, Z
67	4	1	ASR A	C, Z	60	5	2	MOV reg[expr], A		4B	5	1	SWAP A, X	Z
68	7	2	ASR [expr]	C, Z	61	6	2	MOV reg[X+expr], A		4C	7	2	SWAP A, [expr]	Z
69	8	2	ASR [X+expr]	C, Z	62	8	3	MOV reg[expr], expr		4D	7	2	SWAP X, [expr]	
9x	11	2	CALL		63	9	3	MOV reg[X+expr], expr		4E	5	1	SWAP A, SP	Z
39	5	2	CMP A, expr	if (A=B) Z=1 if (A<B) C=1	3E	10	2	MVI A, [[expr]++]	Z	47	8	3	TST [expr], expr	Z
3A	7	2	CMP A, [expr]		3F	10	2	MVI [[expr]++], A		48	9	3	TST [X+expr], expr	Z
3B	8	2	CMP A, [X+expr]		40	4	1	NOP		49	9	3	TST reg[expr], expr	Z
3C	8	3	CMP [expr], expr		29	4	2	OR A, expr	Z	4A	10	3	TST reg[X+expr], expr	Z
3D	9	3	CMP [X+expr], expr		2A	6	2	OR A, [expr]	Z	72	4	2	XOR F, expr	C, Z
73	4	1	CPL A	Z	2B	7	2	OR A, [X+expr]	Z	31	4	2	XOR A, expr	Z
78	4	1	DEC A	C, Z	2C	7	2	OR [expr], A	Z	32	6	2	XOR A, [expr]	Z
79	4	1	DEC X	C, Z	2D	8	2	OR [X+expr], A	Z	33	7	2	XOR A, [X+expr]	Z
7A	7	2	DEC [expr]	C, Z	2E	9	3	OR [expr], expr	Z	34	7	2	XOR [expr], A	Z
7B	8	2	DEC [X+expr]	C, Z	2F	10	3	OR [X+expr], expr	Z	35	8	2	XOR [X+expr], A	Z
30	9	1	HALT		43	9	3	OR reg[expr], expr	Z	36	9	3	XOR [expr], expr	Z
74	4	1	INC A	C, Z	44	10	3	OR reg[X+expr], expr	Z	37	10	3	XOR [X+expr], expr	Z
75	4	1	INC X	C, Z	71	4	2	OR F, expr	C, Z	45	9	3	XOR reg[expr], expr	Z
										46	10	3	XOR reg[X+expr], expr	Z

Note 1 Interrupt acknowledge to Interrupt Vector table = 13 cycles.

Note 2 The number of cycles required by an instruction is increased by one for instructions that span 256 byte page boundaries in the Flash memory space.

2.5 Instruction Formats

The M8C has a total of seven instruction formats which use instruction lengths of one, two, and three bytes. All instruction bytes are fetched from the program memory (Flash), using an address and data bus that are independent from the address and data buses used for register and RAM access.

While examples of instructions are given in this section, refer to the *PSoC Designer Assembly Language User Guide* for detailed information on individual instructions.

2.5.1 One-Byte Instructions

Many instructions, such as some of the MOV instructions, have single-byte forms, because they do not use an address or data as an operand. As shown in Table 2-3, one-byte instructions use an 8-bit opcode. The set of one-byte instructions can be divided into four categories, according to where their results are stored.

Table 2-3. One-Byte Instruction Format

Byte 0
8-Bit Opcode

The first category of one-byte instructions are those that do not update any registers or RAM. Only the one-byte NOP and SSC instructions fit this category. While the ***program counter*** is incremented as these instructions execute, they do not cause any other internal M8C registers to be updated, nor do these instructions directly affect the register space or the RAM address space. The SSC instruction will cause SROM code to run, which will modify RAM and the M8C internal registers.

The second category has only the two PUSH instructions in it. The PUSH instructions are unique, because they are the only one-byte instructions that cause a RAM address to be modified. These instructions automatically increment the SP.

The third category has only the HALT instruction in it. The HALT instruction is unique, because it is the only a one-byte instruction that causes a user register to be modified. The HALT instruction modifies user register space address FFh (CPU_SCR register).

The final category for one-byte instructions are those that cause updates of the internal M8C registers. This category holds the largest number of instructions: ASL, ASR, CPL, DEC, INC, MOV, POP, RET, RETI, RLC, ROMX, RRC, SWAP. These instructions can cause the A, X, and SP registers or SRAM to update.

2.5.2 Two-Byte Instructions

The majority of M8C instructions are two bytes in length. While these instructions can be divided into categories identical to the one-byte instructions, this would not provide a useful distinction between the three two-byte instruction formats that the M8C uses.

Table 2-4. Two-Byte Instruction Formats

Byte 0	Byte 1
4-Bit Opcode	12-Bit Relative Address
8-Bit Opcode	8-Bit Data
8-Bit Opcode	8-Bit Address

The first two-byte instruction format, shown in the first row of Table 2-4, is used by short jumps and calls: `CALL`, `JMP`, `JACC`, `INDEX`, `JC`, `JNC`, `JNZ`, `JZ`. This instruction format uses only four bits for the instruction opcode, leaving 12 bits to store the relative destination address in a two's-complement form. These instructions can change program execution to an address relative to the current address by -2048 or +2047.

The second two-byte instruction format, shown in the second row of Table 2-4, is used by instructions that employ the Source Immediate addressing ***mode*** (see "Source Immediate" on page 47). The destination for these instructions is an internal M8C register, while the source is a constant value. An example of this type of instruction would be `ADD A, 7`.

The third two-byte instruction format, shown in the third row of Table 2-4, is used by a wide range of instructions and addressing modes. The following is a list of the addressing modes that use this third two-byte instruction format:

- Source Direct (`ADD A, [7]`)
- Source Indexed (`ADD A, [X+7]`)
- Destination Direct (`ADD [7], A`)
- Destination Indexed (`ADD [X+7], A`)
- Source Indirect Post Increment (`MVI A, [7]`)
- Destination Indirect Post Increment (`MVI [7], A`)

For more information on addressing modes see "Addressing Modes" on page 47.

obsolete

2.5.3 Three-Byte Instructions

The three-byte instruction formats are the second most prevalent instruction formats. These instructions need three bytes because they either move data between two addresses in the user-accessible address space (registers and RAM) or they hold 16-bit absolute addresses as the destination of a long jump or long call.

Table 2-5. Three-Byte Instruction Formats

Byte 0	Byte 1	Byte 2
8-Bit Opcode	16-Bit Address (MSB, LSB)	
8-Bit Opcode	8-Bit Address	8-Bit Data
8-Bit Opcode	8-Bit Address	8-Bit Address

The first instruction format, shown in the first row of Table 2-5, is used by the LJMP and LCALL instructions. These instructions change program execution unconditionally to an absolute address. The instructions use an 8-bit opcode, leaving room for a 16-bit destination address.

The second three-byte instruction format, shown in the second row of Table 2-5, is used by the following two addressing modes:

- Destination Direct Source Immediate (`ADD [7], 5`)
- Destination Indexed Source Immediate (`ADD [X+7], 5`)

The third three-byte instruction format, shown in the third row of Table 2-5, is for the Destination Direct Source Direct addressing mode, which is used by only one instruction. This instruction format uses an 8-bit opcode followed by two 8-bit addresses. The first address is the destination address in RAM, while the second address is the source address in RAM. The following is an example of this instruction:

```
MOV [7], [5]
```

2.6 Addressing Modes

The M8C has ten addressing modes. These modes are detailed and located on the following pages:

- “Source Immediate” on page 47.
- “Source Direct” on page 48.
- “Source Indexed” on page 48.
- “Destination Direct” on page 49.
- “Destination Indexed” on page 49.
- “Destination Direct Source Immediate” on page 49.
- “Destination Indexed Source Immediate” on page 50.
- “Destination Direct Source Direct” on page 50.
- “Source Indirect Post Increment” on page 51.
- “Destination Indirect Post Increment” on page 51.

2.6.1 Source Immediate

For these instructions, the source value is stored in operand 1 of the instruction. The result of these instructions is placed in either the M8C A, F, or X register as indicated by the instruction’s opcode. All instructions using the Source Immediate addressing mode are two bytes in length.

Table 2-6. Source Immediate

Opcode	Operand 1
Instruction	Immediate Value

Source Immediate Examples:

Source Code	Machine Code	Comments
`ADD A, 7`	`01 07`	The immediate value 7 is added to the Accumulator. The result is placed in the Accumulator.
`MOV X, 8`	`57 08`	The immediate value 8 is moved into the X register.
`AND F, 9`	`70 09`	The immediate value of 9 is logically AND’ed with the F register and the result is placed in the F register.

OBSOLETE

2.6.2 Source Direct

For these instructions, the source address is stored in operand 1 of the instruction. During instruction execution, the address will be used to retrieve the source value from RAM or register address space. The result of these instructions is placed in either the M8C A or X register as indicated by the instruction's opcode. All instructions using the Source Direct addressing mode are two bytes in length.

Table 2-7. Source Direct

Opcode	Operand 1
Instruction	Source Address

Source Direct Examples:

Source Code	Machine Code	Comments
`ADD A, [7]`	`02 07`	The value in memory at address 7 is added to the Accumulator and the result is placed into the Accumulator.
`MOV A, REG[8]`	`5D 08`	The value in the register space at address 8 is moved into the Accumulator.

2.6.3 Source Indexed

For these instructions, the source offset from the X register is stored in operand 1 of the instruction. During instruction execution, the current X register value is added to the signed offset, to determine the address of the source value in RAM or register address space. The result of these instructions is placed in either the M8C A or X register as indicated by the instruction's opcode. All instructions using the Source Indexed addressing mode are two bytes in length.

Table 2-8. Source Indexed

Opcode	Operand 1
Instruction	Source Index

Source Indexed Examples:

Source Code	Machine Code	Comments
`ADD A, [X+7]`	`03 07`	The value in memory at address X+7 is added to the Accumulator. The result is placed in the Accumulator.
`MOV X, [X+8]`	`59 08`	The value in RAM at address X+8 is moved into the X register.

OBSOLETE

2.6.4 Destination Direct

For these instructions, the destination address is stored in the machine code of the instruction. The source for the operation is either the M8C A or X register as indicated by the instruction's opcode. All instructions using the Destination Direct addressing mode are two bytes in length.

Table 2-9. Destination Direct

Opcode	Operand 1
Instruction	Destination Address

Destination Direct Examples:

Source Code	Machine Code	Comments
`ADD [7], A`	`04 07`	The value in the Accumulator is added to memory at address 7. The result is placed in memory at address 7. The Accumulator is unchanged.
`MOV REG[8], A`	`60 08`	The Accumulator value is moved to register space at address 8. The Accumulator is unchanged.

2.6.5 Destination Indexed

For these instructions, the destination offset from the X register is stored in the machine code for the instruction. The source for the operation is either the M8C A register or an immediate value as indicated by the instruction's opcode. All instructions using the Destination Indexed addressing mode are two bytes in length.

Table 2-10. Destination Indexed

Opcode	Operand 1
Instruction	Destination Index

Destination Indexed Example:

Source Code	Machine Code	Comments
`ADD [X+7], A`	`05 07`	The value in memory at address X+7 is added to the Accumulator. The result is placed in memory at address X+7. The Accumulator is unchanged.

2.6.6 Destination Direct Source Immediate

For these instructions, the destination address is stored in operand 1 of the instruction. The source value is stored in operand 2 of the instruction. All instructions using the Destination Direct Source Immediate addressing mode are three bytes in length.

Table 2-11. Destination Direct Source Immediate

Opcode	Operand 1	Operand 2
Instruction	Destination Address	Immediate Value

Destination Direct Source Immediate Examples:

Source Code	Machine Code	Comments
`ADD [7], 5`	`06 07 05`	The value in memory at address 7 is added to the immediate value 5. The result is placed in memory at address 7.
`MOV REG[8], 6`	`62 08 06`	The immediate value 6 is moved into register space at address 8.

OBSOLETE

2.6.7 Destination Indexed Source Immediate

For these instructions, the destination offset from the X register is stored in operand 1 of the instruction. The source value is stored in operand 2 of the instruction. All instructions using the Destination Indexed Source Immediate addressing mode are three bytes in length.

Table 2-12. Destination Indexed Source Immediate

Opcode	Operand 1	Operand 2
Instruction	Destination Index	Immediate Value

Destination Indexed Source Immediate Examples:

Source Code	Machine Code	Comments
`ADD [X+7], 5`	`07 07 05`	The value in memory at address X+7 is added to the immediate value 5. The result is placed in memory at address X+7.
`MOV REG[X+8], 6`	`63 08 06`	The immediate value 6 is moved into the register space at address X+8.

2.6.8 Destination Direct Source Direct

Only one instruction uses this addressing mode. The destination address is stored in operand 1 of the instruction. The source address is stored in operand 2 of the instruction. The instruction using the Destination Direct Source Direct addressing mode is three bytes in length.

Table 2-13. Destination Direct Source Direct

Opcode	Operand 1	Operand 2
Instruction	Destination Address	Source Address

Destination Direct Source Direct Example:

Source Code	Machine Code	Comments
`MOV [7], [8]`	`5F 07 08`	The value in memory at address 8 is moved to memory at address 7.

OBSOLETE

2.6.9 Source Indirect Post Increment

Only one instruction uses this addressing mode. The source address stored in operand 1 is actually the address of a pointer. During instruction execution, the pointer's current value is read to determine the address in RAM where the source value is found. The pointer's value is incremented after the source value is read. For PSoC microcontrollers with more than 256 bytes of RAM, the Data Page Read (MVR_PP) register is used to determine which RAM page to use with the source address. Therefore, values from pages other than the current page can be retrieved without changing the Current Page Pointer (CUR_PP). The pointer is always read from the current RAM page. For information on the MVR_PP and CUR_PP registers, see the Register Details chapter on page 361. The instruction using the Source Indirect Post Increment addressing mode is two bytes in length.

Table 2-14. Source Indirect Post Increment

Opcode	Operand 1
Instruction	Source Address Pointer

Source Indirect Post Increment Example:

Source Code	Machine Code	Comments
`MVI A, [8]`	`3E 08`	The value in memory at address 8 (the indirect address) points to a memory location in RAM. The value at the memory location, pointed to by the indirect address, is moved into the Accumulator. The indirect address, at address 8 in memory, is then incremented.

2.6.10 Destination Indirect Post Increment

Only one instruction uses this addressing mode. The destination address stored in operand 1 is actually the address of a pointer. During instruction execution, the pointer's current value is read to determine the destination address in RAM where the Accumulator's value is stored. The pointer's value is incremented, after the value is written to the destination address. For PSoC microcontrollers with more than 256 bytes of RAM, the Data Page Write (MVW_PP) register is used to determine which RAM page to use with the destination address. Therefore, values can be stored in pages other than the current page without changing the Current Page Pointer (CUR_PP). The pointer is always read from the current RAM page. For information on the MVR_PP and CUR_PP registers, see the Register Details chapter on page 361. The instruction using the Destination Indirect Post Increment addressing mode is two bytes in length.

Table 2-15. Destination Indirect Post Increment

Opcode	Operand 1
Instruction	Destination Address Pointer

Destination Indirect Post Increment Example:

Source Code	Machine Code	Comments
`MVI [8], A`	`3F 08`	The value in memory at address 8 (the indirect address) points to a memory location in RAM. The Accumulator value is moved into the memory location pointed to by the indirect address. The indirect address, at address 8 in memory, is then incremented.

OBSOLETE

2.7 Register Definitions

The following register is associated with the CPU Core (M8C). The register description has an associated register table showing the bit structure. The bits that are grayed out in the table are reserved bits and are not detailed in the register description that follows. Reserved bits should always be written with a value of '0'.

2.7.1 CPU_F Register

Address	Name	Bit 7	Bit 6	Bit 5	Bit 4	Bit 3	Bit 2	Bit 1	Bit 0	Access
x,F7h	CPU_F	PgMode[1:0]			XIO		Carry	Zero	GIE	RL : 02

LEGEND
L The AND F, expr; OR F, expr; and XOR F, expr flag instructions can be used to modify this register.
x An "x" before the comma in the address field indicates that this register can be read or written to no matter what bank is used.

The M8C Flag Register (CPU_F) provides read access to the M8C flags.

Bits 7 and 6: PgMode[1:0]. PgMode determines how the CUR_PP, STK_PP, and IDX_PP registers are used in forming effective RAM addresses for Direct Address mode and Indexed Address mode operands. PgMode also determines whether the stack page is determined by the STK_PP or IDX_PP register.

Bit 4: XIO. The I/O Bank Select bit, also known as the register bank select bit, is used to select the register bank that is active for a register read or write. This bit allows the PowerPSoC device to have 512 8-bit registers and therefore, can be thought of as the ninth address bit for registers. The address space accessed when the XIO bit is set to '0' is called the ***user space***, while the address space accessed when the XIO bit is set to '1' is called the ***configuration space***.

Bit 2: Carry. The Carry flag bit is set or cleared in response to the result of several instructions. It can also be manipulated by the flag-logic opcodes (for example, OR F, 4). See the *PSoC Designer Assembly Guide User Manual* for more details.

Bit 1: Zero. The Zero flag bit is set or cleared in response to the result of several instructions. It can also be manipulated by the flag-logic opcodes (for example, OR F, 2). See the *PSoC Designer Assembly Guide User Manual* for more details.

Bit 0: GIE. The state of the Global Interrupt Enable bit determines whether interrupts (by way of the interrupt request (IRQ)) will be recognized by the M8C. This bit is set or cleared by the user, using the flag-logic instructions (for example, OR F, 1). GIE is also cleared automatically when an interrupt is processed, after the flag byte has been stored on the stack, preventing nested interrupts. If desired, the bit can be set in an ***interrupt service routine (ISR)***.

For GIE=1, the M8C samples the IRQ input for each instruction. For GIE=0, the M8C ignores the IRQ.

For additional information, refer to the CPU_F register on page 464.

OBSOLETE

3. Supervisory ROM (SROM)

This chapter discusses the Supervisory ROM (SROM) functions and its associated registers. For a complete table of the SROM registers, refer to the Summary Table of the Core Registers on page 31. For a quick reference of all PowerPSoC registers in address order, refer to the Register Details chapter on page 361.

3.1 Architectural Description

The SROM holds code that is used to boot the PowerPSoC device, calibrate circuitry, and perform Flash operations. The functions provided by the SROM are called from code stored in the Flash or by device programmers.

The SROM is used to boot the part and provide ***interface*** functions to the Flash banks. (Table 3-1 lists the SROM functions.) The SROM functions are accessed by executing the Supervisory System Call instruction (SSC) which has an opcode of 00h. Prior to executing the SSC, the M8C's ***accumulator*** needs to load with the desired SROM function code from Table 3-1. Attempting to access undefined functions will cause a HALT. The SROM functions execute code with calls; therefore, the functions require stack space. With the exception of Reset, all of the SROM functions have a ***parameter block*** in SRAM that must be configured before executing the SSC. Table 3-2 on page 54 lists all possible parameter block variables. The meaning of each ***parameter***, with regards to a specific SROM function, is described later in this chapter. Because the SSC instruction clears the CPU_F PgMode bits, all parameter block variable addresses are in SRAM Page 0. The CPU_F value is automatically restored at the end of the SROM function.

Note For PSoC devices with more than 256 bytes of SRAM (that is, more than 1 page of SRAM, see the table titled "PowerPSoC Device SRAM Availability" on page 63), the MVR_PP and the MVW_PP pointers are not disabled by clearing the CPU_F PgMode bits. Therefore, the POINTER parameter is interpreted as an address in the page indicated by the MVI page pointers, when the supervisory operation is called. This allows the data ***buffer*** used in the supervisory operation to be located in any SRAM page. (See the RAM Paging chapter on page 63 for more details regarding the MVR_PP and MVW_PP pointers.)

Table 3-1. List of SROM Functions

Function Code	Function Name	Stack Space Needed	Page
00h	SWBootReset	0	46
01h	ReadBlock	7	47
02h	WriteBlock	10	48
03h	EraseBlock	9	48
06h	TableRead	3	49
07h	CheckSum	3	49
08h	Calibrate0	4	49
09h	Calibrate1	3	49

Note ProtectBlock (described on page 48) and EraseAll (described on page 49) SROM functions are not listed in the table above because they are dependent on external programming.

Two important variables that are used for all functions are KEY1 and KEY2. These variables are used to help discriminate between valid SSCs and inadvertent SSCs. KEY1 must always have a value of 3Ah, while KEY2 must have the same value as the stack pointer when the SROM function begins execution. This would be the SP (Stack Pointer) value when the SSC opcode is executed, plus three. For all SROM functions except SWBootReset, if either of the keys do not match the expected values, the M8C will halt. The SWBootReset function does not check the key values. It only checks to see if the accumulator's value is 0x00. The following code example puts the correct value in KEY1 and KEY2. The code is preceded by a HALT, to force the program to jump directly into the setup code and not accidentally run into it.

CYPRESS CONFIDENTIAL

```
1.        halt
2. SSC0P: mov [KEY1], 3ah
3.        mov X, SP
4.        mov A, X
5.        add A, 3
6.        mov [KEY2], A
```

Table 3-2. SROM Function Variables

Variable Name	SRAM Address
KEY1 / RETURN CODE	0,F8h
KEY2	0,F9h
BLOCKID	0,FAh
POINTER	0,FBh
CLOCK	0,FCh
Reserved	0,FDh
DELAY	0,FEh
Reserved	0,FFh

3.1.1 Additional SROM Feature

The SROM has the following additional feature.

Return Codes: These aid in the determination of success or failure of a particular function. The return code is stored in KEY1's position in the parameter block. The CheckSum and TableRead functions do not have return codes because KEY1's position in the parameter block is used to return other data.

Table 3-3. SROM Return Code Meanings

Return Code Value	Description
00h	Success.
01h	Function not allowed due to level of protection on block.
02h	Software reset without hardware reset.
03h	Fatal error, SROM halted.

Note Read, write, and erase operations may fail if the target block is read or write protected. Block protection levels are set during device programming and can not be modified from code in the PowerPSoC device.

3.1.2 SROM Function Descriptions

3.1.2.1 SWBootReset Function

The SROM function SWBootReset is responsible for transitioning the device from a reset state to running ***user*** code. See System Resets chapter on page 257 for more information on what events will cause the SWBootReset function to execute.

The SWBootReset function is executed whenever the SROM is entered with an M8C accumulator value of 00h; the SRAM parameter block is not used as an input to the function. This will happen, by design, after a ***hardware*** reset, because the M8C's accumulator is reset to 00h or when user code executes the SSC instruction with an accumulator value of 00h.

If the ***checksum*** of the calibration data is valid, the SWBootReset function ends by setting the internal M8C registers (CPU_SP, CPU_PC, CPU_X, CPU_F, CPU_A) to 00h writing 00h to most SRAM addresses in SRAM Page 0 and then begins to execute user code at address 0000h. (See Table 3-4 and the following paragraphs for more information on which SRAM addresses are modified.) If the checksum is not valid, an internal reset is executed and the boot process starts over. If this condition occurs, the internal reset status bit (IRESS) is set in the CPU_SCR1 register.

In PSoC devices with more than 256 bytes of SRAM, no SRAM is modified by the SWBootReset function in SRAM pages numbered higher than '0'.

Table 3-4 on page 55 documents the value of all the SRAM addresses in Page 0 after a successful SWBootReset. A cell in the table with "xx" indicates that the SRAM address is not modified by the SWBootReset function. A hex value in a cell indicates that the address should always have the indicated value after a successful SWBootReset. A cell with a "??" in it indicates that the value, after a SWBootReset, is determined by the value of IRAMDIS bit in the CPU_SCR1 register. If IRAMDIS is not set, these addresses will be initialized to 00h. If IRAMDIS is set, these addresses will not be modified by a SWBootReset after a watchdog reset. The IRAMDIS bit allows variables to be preserved even if a watchdog reset (WDR) occurs. The IRAMDIS bit is reset by all system resets except watchdog reset. Therefore, this bit is only useful for watchdog resets and not general resets.

OBSOLETE

Table 3-4. SRAM Map Post SWBootReset (00h)

Address	0	1	2	3	4	5	6	7
	8	9	A	B	C	D	E	F
0x0_	0x00	0x00	0x00	??	??	??	??	??
	??	??	??	??	??	??	??	??
0x1_	??	??	??	??	??	??	??	??
	??	??	??	??	??	??	??	??
0x2_	??	??	??	??	??	??	??	??
	??	??	??	??	??	??	??	??
0x3_	??	??	??	??	??	??	??	??
	??	??	??	??	??	??	??	??
0x4_	??	??	??	??	??	??	??	??
	??	??	??	??	??	??	??	??
0x5_	??	??	??	??	??	??	??	??
	??	??	??	??	??	??	??	??
0x6_	??	??	??	??	??	??	??	??
	??	??	??	??	??	??	??	??
0x7_	??	??	??	??	??	??	??	??
	??	??	??	??	??	??	??	??
0x8_	??	??	??	??	??	??	??	??
	??	??	??	??	??	??	??	??
0x9_	??	??	??	??	??	??	??	??
	??	??	??	??	??	??	??	??
0xA_	??	??	??	??	??	??	??	??
	??	??	??	??	??	??	??	??
0xB_	??	??	??	??	??	??	??	??
	??	??	??	??	??	??	??	??
0xC_	??	??	??	??	??	??	??	??
	??	??	??	??	??	??	??	??
0xD_	??	??	??	??	??	??	??	??
	0x00	0x00	0x00	0x00	0x00	0x00	0x00	0x00
0xE_	0x00	0x00	0x00	0x00	0x00	0x00	0x00	0x00
	0x00	0x00	0x00	0x00	0x00	0x00	0x00	0x00
0xF_	0x00	0x00	0x00	0x00	0x00	0x00	??	??
	0x00 0x02	xx	0x00	0x00	0xn	xx	0x00	0x00

Address F8h is the return code byte for all SROM functions (except Checksum and TableRead); for this function, the only acceptable values are 00h and 02h. Address FCh is the fail count variable. After POR (Power on Reset), WDR, or XRES (External Reset), the variable is initialized to 00h by the SROM. Each time the checksum fails, the fail count is incremented. Therefore, if it takes two passes through SWBootReset to get a good checksum, the fail count would be 01h.

3.1.2.2 *ReadBlock Function*

The ReadBlock function is used to read 64 contiguous bytes from Flash: a ***block***. The number of blocks in a device is the total number of bytes divided by 64. Refer to Table 3-5 to determine the amount of space in the CY8CLED0xx0x PowerPSoC device.

Table 3-5. Flash Memory Organization

PowerPSoC Device	Amount of Flash	Amount of SRAM	Number of Blocks per Bank	Number of Banks
CY8CLED0xx0x	16 KB	1 KB	128	2

The first thing the ReadBlock function does is check the protection bits to determine if the desired BLOCKID is readable. If read protection is turned on, the ReadBlock function will exit setting the accumulator and KEY2 back to 00h. KEY1 will have a value of 01h, indicating a read failure.

If read protection is not enabled, the function will read 64 bytes from the Flash using a ROMX instruction and store the results in SRAM using an MVI instruction. The 64 bytes are stored in SRAM, beginning at the address indicated by the value of the POINTER parameter. When the ReadBlock completes successfully, the accumulator, KEY1, and KEY2 will all have a value of 00h.

If the PSoC device has more than one bank of Flash, the bank value in the FLS_PR1 register must be set prior to executing the SSC instruction. Refer to Table 3-5.

Note A MVI [expr], A is used to store the Flash block contents in SRAM; thus, the MVW_PP register can be set to indicate which SRAM pages will receive the data.

Table 3-6. ReadBlock Parameters (01h)

Name	Address	Type	Description
MVW_PP	0,D5h	Register	MVI write page pointer register
KEY1	0,F8h	RAM	3Ah
KEY2	0,F9h	RAM	Stack Pointer value+3, when SSC is executed.
BLOCKID	0,FAh	RAM	Flash block number
POINTER	0,FBh	RAM	Addresses in SRAM where returned data should be stored.
FLS_PR1	1,FAh	Register	Flash bank number.

3.1.2.3 WriteBlock Function

The WriteBlock function is used to store data in the Flash. Data is moved 64 bytes at a time from SRAM to Flash using this function. Before a write can be performed, either an EraseAll or an EraseBlock must be completed successfully.

The first thing the WriteBlock function does is check the protection bits and determine if the desired BLOCKID is writeable. If write protection is turned on, the WriteBlock function will exit, setting the accumulator and KEY2 back to 00h. KEY1 will have a value of 01h, indicating a write failure. Write protection is set when the PowerPSoC device is programmed externally and cannot be changed through the SSC function.

The BLOCKID of the ***Flash block***, where the data is stored, must be determined and stored at SRAM address FAh. For valid BLOCKID values, refer to Table 3-5.

An MVI A, [expr] instruction is used to move data from SRAM into Flash. Therefore, the MVI read pointer (MVR_PP register) can be used to specify which SRAM page data is pulled from. Using the MVI read pointer and the parameter blocks POINTER value allows the SROM WriteBlock function to move data from any SRAM page into any Flash block, in either Flash bank.

The SRAM address, of the first of the 64 bytes to be stored in Flash, must be indicated using the POINTER variable in the parameter block (SRAM address FBh).

Finally, the CLOCK and DELAY value must be set correctly. The CLOCK value determines the length of the write ***pulse*** that will be used to store the data in the Flash. The CLOCK and DELAY values are dependent on the CPU speed and must be set correctly. Refer to 3.3 Clocking on page 61 for additional information.

If the PSoC device you are using has more than one bank of Flash, the bank value in the FLS_PR1 register must be set prior to executing the SSC instruction. Refer to Table 3-5.

Table 3-7. WriteBlock Parameters (02h)

Name	Address	Type	Description
MVR_PP	0,D4h	Register	MVI read page pointer register.
KEY1	0,F8h	RAM	3Ah
KEY2	0,F9h	RAM	Stack Pointer value+3, when SSC is executed.
BLOCKID	0,FAh	RAM	Flash block number.
POINTER	0,FBh	RAM	First of 64 addresses in SRAM, where the data to be stored in Flash is located prior to calling WriteBlock.
CLOCK	0,FCh	RAM	Clock divider used to set the write pulse width.
DELAY	0,FEh	RAM	For a CPU speed of 12 MHz set to 56h.
FLS_PR1	1,FAh	Register	Flash bank number.

3.1.2.4 EraseBlock Function

The EraseBlock function is used to erase a block of 64 contiguous bytes in Flash.

The first thing the EraseBlock function does is check the protection bits and determine if the desired BLOCKID is writeable. If write protection is turned on, the EraseBlock function will exit, setting the accumulator and KEY2 back to 00h. KEY1 will have a value of 01h, indicating a write failure.

To set up the parameter block for the EraseBlock function, correct key values must be stored in KEY1 and KEY2. The block number to be erased must be stored in the BLOCKID variable, and the CLOCK and DELAY values must be set based on the current CPU speed. For more information on setting the CLOCK and DELAY values, see 3.3 Clocking on page 61.

If the PSoC device you are using has more than one bank of Flash, the bank value in the FLS_PR1 register must be set prior to executing the SSC instruction. Refer to Table 3-5.

Table 3-8. EraseBlock Parameters (03h)

Name	Address	Type	Description
KEY1	0,F8h	RAM	3Ah
KEY2	0,F9h	RAM	Stack Pointer value+3, when SSC is executed.
BLOCKID	0,FAh	RAM	Flash block number.
CLOCK	0,FCh	RAM	Clock divider used to set the erase pulse width.
DELAY	0,FEh	RAM	For a CPU speed of 12 MHz set to 56h.
FLS_PR1	1,FAh	Register	Flash bank number.

3.1.2.5 ProtectBlock Function

The PowerPSoC devices offer Flash protection on a block-by-block basis. Table 3-9 on page 56 lists the protection modes available. In the table, ER and EW are used to indicate the ability to perform external reads and writes (that is, by an external programmer). For internal writes, IW is used. Internal reading is always permitted by way of the ROMX instruction. The ability to read by way of the SROM ReadBlock function is indicated by SR.

In the table below, note that all protection is removed by EraseAll.

Table 3-9. Protect Block Modes

Mode	Settings	Description	In PSoC Designer
00b	SR ER EW IW	Unprotected	U = Unprotected
01b	$\overline{SR}$ ER EW IW	Read protect	F = Factory upgrade
10b	$\overline{SR}$ ER $\overline{EW}$ IW	Disable external write	R = Field upgrade
11b	$\overline{SR}$ ER $\overline{EW}$ $\overline{IW}$	Disable internal write	W = Full protection

PROFILE

3.1.2.6 TableRead Function

The TableRead function gives the user access to part-specific data stored in the Flash during manufacturing. The Flash for these tables is separate from the program Flash and is not directly accessible.

One of the uses of the SROM TableRead function is to retrieve the values needed to optimize Flash programming for temperature. More information about how to use these values may be found in the section titled 3.3 Clocking on page 61.

3.1.2.7 EraseAll Function

The EraseAll function performs a series of steps that destroys the user data in the Flash banks and resets the protection block in each Flash bank to all zeros (the unprotected state). This function may only be executed by an external programmer. If EraseAll is executed from code, the M8C will HALT without touching the Flash or protections.

Table 3-10. Flash Tables with Assigned Values in Flash Bank 0

	F8h	F9h	FAh	FBh	FCh	FDh	FEh	FFh
Table 0	Silicon ID							
Table 1							Room Temperature Calibration for 5V	Hot Temperature Calibration for 5V
Table 2				Temp Sensor Hot Temperature Offset		IMO Hot Temperature Trim		
Table 3	M (cold)	B (cold)	Mult (cold)	M (hot)	B (hot)	Mult (hot)	00h	01h

3.1.2.8 Checksum Function

The Checksum function calculates a 16-bit checksum over a user specifiable number of blocks, within a single ***Flash bank*** starting at block zero. The BLOCKID parameter is used to pass in the number of blocks to checksum. A BLOCKID value of '1' will calculate the checksum of only block 0, while a BLOCKID value of '0' will calculate the checksum of 256 blocks in the bank.

The 16-bit checksum is returned in KEY1 and KEY2. The parameter KEY1 holds the lower 8 bits of the checksum and the parameter KEY2 holds the upper 8 bits of the checksum. For devices with multiple Flash banks, the checksum function must be called once for each Flash bank. The SROM Checksum function will operate on the Flash bank indicated by the Bank bit in the FLS_PR1 register.

Table 3-11. Checksum Parameters (07h)

Name	Address	Type	Description
KEY1	0,F8h	RAM	3Ah
KEY2	0,F9h	RAM	Stack Pointer value+3, when SSC is executed.
BLOCKID	0,FAh	RAM	Number of Flash blocks to calculate checksum on.
FLS_PR1	1,FAh	Register	Flash bank number.

3.1.2.9 Calibrate0 Function

The Calibrate0 function transfers the calibration values stored in a special area of the Flash to their appropriate registers. This function may be executed at any time to set all calibration values back to their 5V values. However, it should not be necessary to call this function.

Table 3-12. Calibrate0 Parameters (08h)

Name	Address	Type	Description
KEY1	0,F8h	RAM	3Ah
KEY2	0,F9h	RAM	Stack Pointer value+3, when SSC is executed.

3.1.2.10 Calibrate1 Function

While the Calibrate1 function is a completely separate function from Calibrate0, they perform the same function, which is to transfer the calibration values stored in a special area of the Flash to their appropriate registers. What is unique about Calibrate1 is that it calculates a checksum of the calibration data and, if that checksum is determined to be invalid, Calibrate1 will cause a ***hardware reset*** by generating an internal reset. If this occurs, it is indicated by setting the Internal Reset Status bit (IRESS) in the CPU_SCR1 register.

OBSOLETE

The Calibrate1 function uses SRAM to calculate a checksum of the calibration data. The POINTER value is used to indicate the address of a 62-byte buffer used by this function. When the function completes, the 62 bytes will be set to 00h.

An MVI A, [expr] and an MVI [expr], A instruction are used to move data between SRAM and Flash. Therefore, the MVI write pointer (MVW_PP) and the MVI read pointer (MVR_PP) must be specified to the same SRAM page to control the page of RAM used for the operations.

Calibrate1 was created as a sub-function of SWBootReset and the Calibrate1 function code was added to provide ***direct access***. For more information on how Calibrate1 works, see the SWBootReset section.

This function may be executed at any time to set all calibration values back to their 5V values. However, it should not be necessary to call this function. This function is simply documented for completeness. It always defaults to 5V values.

Table 3-13. Calibrate1 Parameters (09h)

Name	Address	Type	Description
KEY1	0,F8h	RAM	3Ah
KEY2	0,F9h	RAM	Stack Pointer value+3, when SSC is executed.
POINTER	0,FBh	RAM	First of 30 SRAM addresses used by this function.
MVR_PP	0,D4h	Register	MVI write page pointer.
MVW_PP	0,D5h	Register	MVI read page pointer.

OBSOLETE

3.2 Register Definitions

The following registers are associated with the Supervisory ROM (SROM) and are listed in address order. The register descriptions have an associated register table showing the bit structure for that register. The bits in the tables that are grayed out are reserved bits and are not detailed in the register descriptions that follow. Reserved bits should always be written with a value of '0'. For a complete table of SROM registers, refer to the "Summary Table of the Core Registers" on page 41.

3.2.1 STK_PP Register

Address	Name	Bit 7	Bit 6	Bit 5	Bit 4	Bit 3	Bit 2	Bit 1	Bit 0	Access
0,D1h	STK_PP						Page Bits[2:0]			RW : 00

The Stack Page Pointer Register (STK_PP) is used to set the effective SRAM page for stack memory accesses in a multi-SRAM page PowerPSoC device. This register is only used when a device has more than one page of SRAM.

Bits 2 to 0: Page Bits[2:0]. This register has the potential to affect two types of memory access. The first type of memory access of the STK_PP register is to determine which SRAM page the stack will be stored on. In the reset state, this register's value is 0x00 and the stack will therefore be in SRAM Page 0. However, if the STK_PP register value is changed, the next stack operation will occur on the SRAM page indicated by the new STK_PP value. Therefore, the value of this register should be set early in the program and never be changed. If the program changes the STK_PP value after the stack has grown, the program must ensure that the STK_PP value is restored when needed.

Note The impact that the STK_PP has on the stack is independent of the SRAM Paging bits in the CPU_F register.

The second type of memory access of the STK_PP register affects indexed memory access when the CPU_F[7:6] bits are set to 11b. In this mode, source indexed and destination indexed memory accesses are directed to the stack SRAM page, rather than the SRAM page indicated by the IDX_PP register or SRAM Page 0.

For additional information, refer to the STK_PP register on page 436.

3.2.2 MVR_PP Register

Address	Name	Bit 7	Bit 6	Bit 5	Bit 4	Bit 3	Bit 2	Bit 1	Bit 0	Access
0,D4h	MVR_PP						Page Bits[2:0]			RW : 00

The MVI Read Page Pointer Register (MVR_PP) is used to set the effective SRAM page for MVI read memory accesses in a multi-SRAM page PowerPSoC device.

Bits 2 to 0: Page Bits[2:0]. This register is only used by the MVI A, [expr] instruction, not to be confused with the MVI [expr], A instruction covered by the MVW_PP register. This instruction is considered a read because data is transferred from SRAM to the microprocessor's A register (CPU_A).

When an MVI A, [expr] instruction is executed in a device with more than one page of SRAM, the SRAM address that is read by the instruction is determined by the value of the least significant bits in this register. However, the pointer for the MVI A, [expr] register is always located in the current SRAM page. See the *PSoC Designer Assembly Language User Guide* for more information on the MVI A, [expr] instruction.

The function of this register and the MVI instructions are independent of the SRAM Paging bits in the CPU_F register.

For additional information, refer to the MVR_PP register on page 438.

OBSOLETE

3.2.3 MVW_PP Register

Address	Name	Bit 7	Bit 6	Bit 5	Bit 4	Bit 3	Bit 2	Bit 1	Bit 0	Access
0,D5h	MVW_PP						Page Bits[2:0]			RW : 00

The MVI Write Page Pointer Register (MVW_PP) is used to set the effective SRAM page for MVI write memory accesses in a multi-SRAM page PowerPSoC device.

Bits 2 to 0: Page Bits[2:0]. This register is only used by the MVI [expr], A instruction, not to be confused with the MVI A, [expr] instruction covered by the MVR_PP register. This instruction is considered a write because data is transferred from the microprocessor's A register (CPU_A) to SRAM.

When an MVI [expr], A instruction is executed in a device with more than one page of SRAM, the SRAM address that is written by the instruction is determined by the value of the least significant bits in this register. However, the pointer for the MVI [expr], A register is always located in the current SRAM page. See the *PSoC Designer Assembly Language User Guide* for more information on the MVI [expr], A instruction.

The function of this register and the MVI instructions are independent of the SRAM Paging bits in the CPU_F register.

For additional information, refer to the MVW_PP register on page 439.

3.2.4 CPU_SCR1 Register

Address	Name	Bit 7	Bit 6	Bit 5	Bit 4	Bit 3	Bit 2	Bit 1	Bit 0	Access
x,FEh	CPU_SCR1	IRESS							IRAMDIS	# : 00

LEGEND
x An “x” before the comma in the address field indicates that this register can be read or written to no matter what bank is used.
Access is bit specific. Refer to the Register Details chapter on page 361 for additional information.

The System Status and Control Register 1 (CPU_SCR1) is used to convey the status and control of events related to internal resets and watchdog reset.

Bit 7: IRESS. The Internal Reset Status bit is a read only bit that can be used to determine if the booting process occurred more than once.

When this bit is set, it indicates that the SROM SWBootReset code was executed more than once. If this bit is not set, the SWBootReset was executed only once. In either case, the SWBootReset code will not allow execution from code stored in Flash until the M8C Core is in a safe operating mode with respect to supply voltage and Flash operation. There is no need for concern when this bit is set. It is provided for systems which may be sensitive to boot time, so that they can determine if the normal one-pass boot time was exceeded.

Bit 0: IRAMDIS. The Initialize RAM Disable bit is a control bit that is readable and writeable. The ***default value*** for this bit is ‘0’, which indicates that the maximum amount of SRAM should be initialized on watchdog reset to a value of 00h. When the bit is ‘1’, the minimum amount of SRAM is initialized after a watchdog reset. For more information on this bit, see the “SROM Function Descriptions” on page 54.

For additional information, refer to the CPU_SCR1 register on page 466.

OBSOLETE

3.3 Clocking

Successful programming and erase operations, on the Flash, require that the CLOCK and DELAY parameters be set correctly. To determine the proper value for the DELAY parameter only, the CPU speed must be considered. However, three factors should be used to determine the proper value for CLOCK: operating temperature, CPU speed, and characteristics of the individual device. Equations and additional information on calculating the DELAY and CLOCK values follow.

3.3.1 DELAY Parameter

To determine the proper value for the DELAY parameter, the CPU speed during the Flash operation must be considered. Equation 1 displays the equation for calculating DELAY based on a CPU speed value. In this equation the units for CPU are hertz (Hz).

$$DELAY = \frac{100 \times 10^{-6} \cdot CPU - 80}{13}, \quad 3MHz \le CPU \le 12MHz$$

Equation 1

Equation 2 shows the calculation of the DELAY value for a CPU speed of 12 MHz. The numerical result of this calculation should be rounded to the nearest whole number. In the case of a 12 MHz CPU speed, the correct value for DELAY is 86 (0x56).

$$DELAY = \frac{100 \times 10^{-6} \cdot 12 \times 10^{6} - 80}{13}$$

Equation 2

3.3.2 CLOCK Parameter

The CLOCK parameter must be calculated using different equations for erase and write operations. The erase value for CLOCK must be calculated first. In Equation 3, the erase CLOCK value is indicated by a subscript E after the word CLOCK and the write CLOCK value is indicated by a subscript W after the word CLOCK.

Before either CLOCK value can be calculated, the values for M, B, and Mult must be determined. These are device specific values that are stored in the Flash Table 3 and are accessed by way of the TableRead SROM function (see the 3.1.2.6 TableRead Function on page 57). If the operating temperature is at or below 0°C, the cold values should be used. For operating temperatures at or above 0°C, the hot values should be used. See Table 3-10 on page 57 for more information. Equations for calculating the correct value of CLOCK for write operations are first introduced with the assumption that the CPU speed is 12 MHz.

The equation for calculating the CLOCK value for an erase Flash operation is shown in Equation 3. In this equation the T has units of °C.

$$CLOCK_E = B - \frac{2M \cdot T}{256}$$

Equation 3

Using the correct values for B, M, and T, in the equation above, is required to achieve the endurance specifications of the Flash. However, for device programmers, where this calculation may be difficult to perform, the equation can be simplified by setting T to 0°C and using the hot value for B and M. This simplification is acceptable only if the total number of erase write cycles are kept to less than 10 and the operation is performed near room temperature. When T is set to 0, Equation 3 simplifies to the following.

$$CLOCK_E = B$$

Equation 4

Once a value for the erase CLOCK value has been determined, the write CLOCK value can be calculated. The equation to calculate the CLOCK value for a write is as follows.

$$CLOCK_W = \frac{CLOCK_E \cdot Mult}{64}$$

Equation 5

In the equation above, the correct value for Mult must be determined, based on temperature, in the same way that the B and M values were determined for Equation 3.

OBSOLETE

OBSOLETE

4. RAM Paging

This chapter explains the PowerPSoC device's use of RAM Paging and its associated registers. For a complete table of the RAM Paging registers, refer to the "Summary Table of the Core Registers" on page 41. For a quick reference of all PowerPSoC registers in address order, refer to the Register Details chapter on page 361.

4.1 Architectural Description

The M8C is an 8-bit CPU with an 8-bit address bus. The 8-bit memory address bus allows the M8C to access up to 256 bytes of SRAM, to increase the amount of available SRAM and preserve the M8C ***assembly*** language. PowerPSoC devices with more than 256 bytes of SRAM have a paged memory architecture.

Table 4-1. PowerPSoC Device SRAM Availability

PowerPSoC Device	Amount of SRAM	Number of Pages
CY8CLED0xx0x	1 KB	4 Pages

To take full advantage of the paged memory architecture of the PowerPSoC device, several registers must be used and two CPU_F register bits must be managed. However, the Power On Reset (POR) value for all of the paging registers and CPU_F bits is zero. This places the PowerPSoC device in a mode identical to PSoC devices with only 256 bytes of SRAM. It is not necessary to understand all of the Paging registers to take advantage of the additional SRAM available in some devices. Very simple modifications to the reset state of the memory paging logic can be made, to begin to take advantage of the additional SRAM pages.

The memory paging architecture consists of five areas:

- Stack Operations
- Interrupts
- MVI Instructions
- Current Page Pointer
- Indexed Memory Page Pointer

The first three of these areas have no dependency on the CPU_F register's PgMode bits and are covered in the next subsections after Basic Paging. The function of the last two depend on the CPU_F PgMode bits and will be covered last.

4.1.1 Basic Paging

The M8C is an 8-bit CPU with an 8-bit memory address bus. The memory address bus allows the M8C to access up to 256 bytes of SRAM. To increase the amount of SRAM, the M8C accesses memory page bits. The memory page bits are located in the CUR_PP register and allow for selection of one of four SRAM pages. In addition to setting the page bits, Page mode must be enabled by setting the CPU_F[7] bit. If Page mode is not enabled, the page bits are ignored and all non-stack memory access is directed to Page 0.

Once Page mode is enabled and the page bits are set, all instructions that operate on memory access the SRAM page indicated by the page bits. The exceptions to this are the instructions that operate on the stack and the MVI instructions: PUSH, POP, LCALL, RETI, RET, CALL, and MVI. See the description of Stack Operations and MVI Instructions below for a more detailed discussion.

Figure 4-1. Data Memory Organization

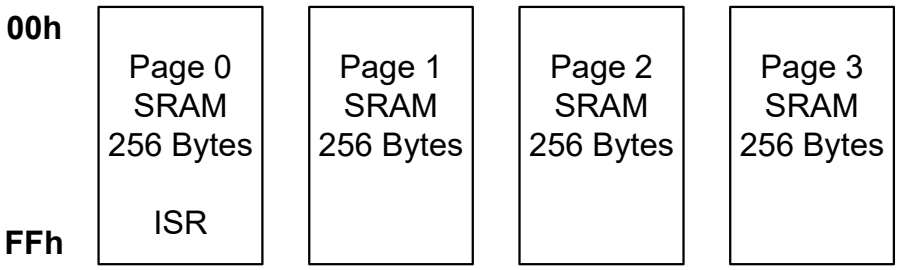

OBSOLETE

4.1.2 Stack Operations

As mentioned previously, the paging architecture's reset state puts the PowerPSoC in a mode that is identical to that of a 256 byte PSoC device. Therefore, upon rest, all memory accesses will be to Page 0. The SRAM page that stack operations will use is determined by the value of the three least significant bits of the stack page pointer register (STK_PP). Stack operations have no dependency on the PgMode bits in the CPU_F register. Stack operations are those that use the Stack Pointer (SP) to calculate their affected address. Refer to the *PSoC Designer Assembly Language User Guide* at http://www.cypress.com/psoc for more information on all M8C instructions.

Stack memory accesses must be treated as a special case. If they are not, the stack could be fragmented across several pages. To prevent the stack from becoming fragmented, all instructions that operate on the stack automatically use the page indicated by the STK_PP register. Therefore, if a CALL is encountered in the program, the PowerPSoC device will automatically push the program counter onto the stack page indicated by STK_PP. Once the program counter is pushed, the SRAM paging mode automatically switches back to the pre-call mode. All other stack operations, such as RET and POP, follow the same rule as CALL. The stack is confined to a single SRAM page and the Stack Pointer will wrap from 00h to FFh and FFh to 00h. The user code must ensure that the stack is not damaged due to stack wrapping.

Because the value of the STK_PP register can be changed at any time, it is theoretically possible to manage the stack in such a way as to allow it to grow beyond one SRAM page or manage multiple stacks. However, the only supported use of the STK_PP register is when its value is set prior to the first stack operation and not changed again.

4.1.3 Interrupts

Interrupts, in a multi-page SRAM PowerPSoC device, operate the same as interrupts in a 256 byte PSoC device. However, because the CPU_F register is automatically set to 0x00 on an interrupt and because of the non-linear nature of interrupts in a system, other parts of the PowerPSoC memory paging architecture can be affected.

Interrupts are an abrupt change in program flow. If no special action is taken on interrupts by the PowerPSoC device, the ***interrupt service routine (ISR)*** could be thrown into any SRAM page. To prevent this problem, the special addressing modes for all memory accesses, except for stack and MVI, are disabled when an ISR is entered. The special addressing modes are disabled when the CUP_F register is cleared. At the end of the ISR, the previous SRAM addressing mode is restored when the CPU_F register value is restored by the RETI instruction.

Therefore, all interrupt service ***routine*** code will start execution in SRAM Page 0. If it is necessary for the ISR to change to another SRAM page, it can be accomplished by changing the values of the CPU_F[7:6] bits to enable the special SRAM addressing modes. However, any change made to the CUR_PP, IDX_PP, or STK_PP registers will persist after the ISR returns. Therefore, the ISR should save the current value of any paging register it modifies and restore its value before the ISR returns.

4.1.4 MVI Instructions

MVI instructions use data page pointers of their own (MVR_PP and MVW_PP). This allows a data buffer to be located away from other program variables, but accessible without changing the Current Page Pointer (CUR_PP).

An MVI instruction performs three memory operations. Both forms of the MVI instruction access an address in SRAM that holds the data pointer (a memory read 1st access), incrementing that value and then storing it back in SRAM (a memory write 2nd access). This pointer value must reside in the current page, just as all other non-stack and non-indexed operations on memory must. However, the third memory operation uses the MVx_PP register. This third memory access can be either a read or a write, depending on which MVI instruction is used. The MVR_PP pointer is used for the MVI instruction that moves data into the accumulator. The MVW_PP pointer is used for the MVI instruction that moves data from the accumulator into SRAM. The MVI pointers are always enabled, regardless of the state of the Flag register page bits (CPU_F register).

4.1.5 Current Page Pointer

The Current Page Pointer is used to determine which SRAM page should be used for all memory accesses. Normal memory accesses are those not covered by other pointers including all non-stack, non-MVI, and non-indexed memory access instructions. The normal memory access instructions have the SRAM page they operate on determined by the value of the CUR_PP register. By default, the CUR_PP register has no affect on the SRAM page that will be used for normal memory access, because all normal memory access is forced to SRAM Page 0.

The upper bit of the PgMode bits in the CPU_F register determine whether or not the CUR_PP register affects normal memory access. When the upper bit of the PgMode bits is set to ‘0’, all normal memory access is forced to SRAM Page 0. This mode is automatically enabled when an Interrupt Service Routine (ISR) is entered. This is because, before the ISR is entered, the M8C pushes the current value of the CPU_F register onto the stack and then clears the CPU_F register. Therefore, by default, any normal memory access in an ISR is guaranteed to occur in SRAM Page 0.

PRELIMINARY

When the RETI instruction is executed, to end the ISR, the previous value of the CPU_F register is restored, restoring the previous page mode. Note that this ISR behavior is the default and that the PgMode bits in the CPU_F register can be changed while in an ISR. If the PgMode bits are changed while in an ISR, the pre-ISR value is still restored by the RETI; but if the CUR_PP register is changed in the ISR, the ISR is also required to restore the value before executing the RETI instruction.

When the upper bit of the PgMode bits is set to '1', all normal memory access is forced to the SRAM page indicated by the value of the CUR_PP register. Table 4-2 gives a summary of the PgMode bit values and the corresponding Memory Paging mode.

4.1.6 Index Memory Page Pointer

The source indexed and destination indexed addressing modes to SRAM are treated as a unique addressing mode in a PowerPSoC device, with more than one page of SRAM. An example of an indexed addressing mode is the MOV A, [X+expr] instruction. Note that register access also has indexed addressing; however, those instructions are not affected by the SRAM paging architecture.

Important Note If you are not using assembly to program a PowerPSoC device, be aware that the ***compiler*** writer may restrict the use of some memory paging modes. Review the conventions in your compiler's user guide for more information on restrictions or conventions associated with memory paging modes.

Indexed SRAM accesses operate in one of three modes:

- Index memory access modes are forced to SRAM Page 0.
- Index memory access modes are directed to the SRAM page indicated by the value in STK_PP.
- Index memory access is forced to the SRAM page indicated by the value in the IDX_PP register.

The mode is determined by the value of the PgMode bits in the CPU_F register. However, the final SRAM page that is used also requires setting either the Stack Page Pointer (STK_PP) register or the Index Page Pointer (IDX_PP) register.

The table below shows the three indexed memory access modes. The third column of the table is provided for reference only.

Table 4-2. CPU_F PgMode Bit Modes

CPU_F PgMode BIts	Current SRAM Page	Indexed SRAM Page	Typical Use
00b	0	0	ISR*
01b	0	STK_PP	ISR with variables on stack
10b	CUR_PP	IDX_PP	
11b	CUR_PP	STK_PP	

* Mode used by SROM functions initiated by SSC instruction.

After reset, the PgMode bits are set to 00b. In this mode, index memory accesses are forced to SRAM Page 0, just as they would be in a PSoC device with only 256 bytes of SRAM. This mode is also automatically enabled when an interrupt occurs in a PowerPSoC device and is therefore considered the default ISR mode. This is because before the ISR is entered, the M8C pushes the current value of the CPU_F register on to the stack and then clears the CPU_F register. Therefore, by default, any indexed memory access in an ISR is guaranteed to occur in SRAM Page 0. When the RETI instruction is executed to end the ISR, the previous value of the CPU_F register is restored and the previous page mode is then also restored. Note that this ISR behavior is default and that the PgMode bits in the CPU_F register may be changed while in an ISR. If the PgMode bits are changed while in an ISR, the pre-ISR value is still restored by the RETI; but if STK_PP or IDX_PP are changed in the ISR, the ISR is also required to restore values before executing the RETI instruction.

The most likely PgMode bit change, while in an ISR, is from the default value of 00b to 01b. In the 01b mode, indexed memory access is directed to the SRAM page indicated by the value of the STK_PP register. By using the PgMode, the value of the STK_PP register is not required to be modified. The STK_PP register is the register that determines which SRAM page the stack is located on. The 01b paging mode is intended to provide easy access to the stack, while in an ISR, by setting the CPU_X register (just X in the instruction format) equal to the value of SP using the MOV X, SP instruction.

The two previous paragraphs covered two of the three indexed memory access modes: STK_PP and forced to SRAM Page 0. Note, as shown in Table 4-2, that the STK_PP mode for indexed memory access is available under two PgMode settings. The 01b mode is intended for ISR use and the 11b mode is intended for non-ISR use. The third indexed memory access mode requires the PgMode bits to be set to 10b. In this mode indexed memory access is forced to the SRAM page indicated by the value of the IDX_PP register.

OBSOLETE

4.2 Register Definitions

The following registers are associated with RAM Paging and are listed in address order. The register descriptions have an associated register table showing the bit structure for that register. The bits in the tables that are grayed out are reserved bits and are not detailed in the register descriptions that follow. Reserved bits should always be written with a value of '0'. For a complete table of RAM Paging registers, refer to the "Summary Table of the Core Registers" on page 41.

4.2.1 TMP_DRx Registers

Address	Name	Bit 7	Bit 6	Bit 5	Bit 4	Bit 3	Bit 2	Bit 1	Bit 0	Access
x,6xh	TMP_DRx	Data[7:0]								RW : 00

LEGEND

x An 'x' before the comma in the address field indicates that this register can be read or written to no matter what bank is used. An "x" after the comma in the address field indicates that there are multiple instances of the register.

The Temporary Data Registers (TMP_DR0, TMP_DR1, TMP_DR2, and TMP_DR3) are used to enhance the performance in multiple SRAM page PowerPSoC devices.

These registers have no pre-defined function (for example, the compiler and hardware do not use these registers) and exist for the user to use as desired.

Bits 7 to 0: Data[7:0]. Due to the paged SRAM architecture of PowerPSoC devices with more than 256 bytes of SRAM, a value in SRAM may not always be accessible without first changing the current page. The TMP_DRx registers are readable and writable registers that are provided to improve the performance of multiple SRAM page PowerPSoC devices, by supplying some register space for data that is always accessible.

For an expanded listing of the TMP_DRx registers, refer to the "Summary Table of the Core Registers" on page 41. For additional information, refer to the TMP_DRx register on page 398.

4.2.2 CUR_PP Register

Address	Name	Bit 7	Bit 6	Bit 5	Bit 4	Bit 3	Bit 2	Bit 1	Bit 0	Access
0,D0h	CUR_PP						Page Bits[2:0]			RW : 00

The Current Page Pointer Register (CUR_PP) is used to set the effective SRAM page for normal memory accesses in a multi-SRAM page PowerPSoC device.

Note This register is only used when a device has more than one page of SRAM. Refer to the table "PowerPSoC Device SRAM Availability" on page 63 to determine the number of SRAM pages in PowerPSoC devices.

Bits 2 to 0: Page Bits[2:0]. These bits affect the SRAM page that is accessed by an instruction when the CPU_F[7:0] bits have a value of either 10b or 11b. Source indexed and destination indexed addressing modes, as well as stack instructions, are never affected by the value of the CUR_PP register. (See the STK_PP and IDX_PP registers for more information.)

The source indirect post increment and destination indirect post increment addressing modes, better know as MVI, are only partially affected by the value of the CUR_PP register. For MVI instructions, the pointer address is in the SRAM page indicated by CUR_PP, but the address pointed to may be in another SRAM page. See the MVR_PP and MVW_PP register descriptions for more information.

For additional information, refer to the CUR_PP register on page 435.

OBSOLETE

4.2.3 STK_PP Register

Address	Name	Bit 7	Bit 6	Bit 5	Bit 4	Bit 3	Bit 2	Bit 1	Bit 0	Access
0,D1h	STK_PP						Page Bits[2:0]			RW : 00

The Stack Page Pointer Register (STK_PP) is used to set the effective SRAM page for stack memory accesses in a multi-SRAM page PowerPSoC device.

Bits 2 to 0: Page Bits[2:0]. These bits have the potential to affect two types of memory access.

The purpose of this register is to determine which SRAM page the stack will be stored on. In the reset state, this register's value will be 0x00 and the stack will therefore be in SRAM Page 0. However, if the STK_PP register value is changed, the next stack operation will occur on the SRAM page indicated by the new STK_PP value. Therefore, the value of this register should be set early in the program and never be changed. If the program changes the STK_PP value after the stack has grown, the program must ensure that the STK_PP value is restored when needed.

Note that the impact that the STK_PP register has on the stack is independent of the SRAM Paging bits in the CPU_F register.

The second type of memory accesses that the STK_PP register affects are indexed memory accesses when the CPU_F[7:6] bits are set to 11b. In this mode, source indexed and destination indexed memory accesses are directed to the stack SRAM page, rather than the SRAM page indicated by the IDX_PP register or SRAM Page 0.

For additional information, refer to the STK_PP register on page 436.

4.2.4 IDX_PP Register

Address	Name	Bit 7	Bit 6	Bit 5	Bit 4	Bit 3	Bit 2	Bit 1	Bit 0	Access
0,D3h	IDX_PP						Page Bits[2:0]			RW : 00

The Index Page Pointer Register (IDX_PP) is used to set the effective SRAM page for indexed memory accesses in a multi-SRAM page PowerPSoC device.

Bits 2 to 0: Page Bits[2:0]. These bits allow instructions, which use the source indexed and destination indexed address modes, to operate on an SRAM page that is not equal to the current SRAM page. However, the effect this register has on indexed addressing modes is only enabled when the CPU_F[7:6] is set to 10b.

When CPU_F[7:6] is set to 10b and an indexed memory access is made, the access is directed to the SRAM page indicated by the value of the IDX_PP register.

See the STK_PP register description for more information on other indexed memory access modes.

For additional information, refer to the IDX_PP register on page 437.

PRELIMINARY

4.2.5 MVR_PP Register

Address	Name	Bit 7	Bit 6	Bit 5	Bit 4	Bit 3	Bit 2	Bit 1	Bit 0	Access
0,D4h	MVR_PP						Page Bits[2:0]			RW : 00

The MVI Read Page Pointer Register (MVR_PP) is used to set the effective SRAM page for MVI read memory accesses in a multi-SRAM page PowerPSoC device.

Note This register is only used when a device has more than one page of SRAM. Refer to the table titled "PowerPSoC Device SRAM Availability" on page 63 to determine the number of SRAM pages in PowerPSoC devices.

Bits 2 to 0: Page Bits[2:0]. These bits are only used by the MVI A, [expr] instruction, not to be confused with the MVI [expr], A instruction covered by the MVW_PP register. This instruction is considered a read because data is transferred from SRAM to the microprocessor's A register (CPU_A).

When an MVI A, [expr] instruction is executed in a device with more than one page of SRAM, the SRAM address that is read by the instruction is determined by the value of the least significant bits in this register. However, the pointer for the MVI A, [expr] instruction is always located in the current SRAM page. See the *PSoC Designer Assembly Language User Guide* for more information on the MVI A, [expr] instruction.

The function of this register and the MVI instructions are independent of the SRAM Paging bits in the CPU_F register. For additional information, refer to the MVR_PP register on page 438.

4.2.6 MVW_PP Register

Address	Name	Bit 7	Bit 6	Bit 5	Bit 4	Bit 3	Bit 2	Bit 1	Bit 0	Access
0,D5h	MVW_PP						Page Bits[2:0]			RW : 00

The MVI Write Page Pointer Register (MVW_PP) is used to set the effective SRAM page for MVI write memory accesses in a multi-SRAM page PowerPSoC device.

Note This register is only used when a device has more than one page of SRAM. Refer to the table titled "PowerPSoC Device SRAM Availability" on page 63 to determine the number of SRAM pages in PowerPSoC devices.

Bits 2 to 0: Page Bits[2:0]. These bits are only used by the MVI [expr], A instruction, not to be confused with the MVI A, [expr] instruction covered by the MVR_PP register. This instruction is considered a write because data is transferred from the microprocessor's A register (CPU_A) to SRAM.

When an MVI [expr], A instruction is executed in a device with more than one page of SRAM, the SRAM address that is written by the instruction is determined by the value of the least significant bits in this register. However, the pointer for the MVI [expr], A instruction is always located in the current SRAM page. See the *PSoC Designer Assembly Language User Guide* for more information on the MVI [expr], A instruction.

The function of this register and the MVI instructions are independent of the SRAM Paging bits in the CPU_F register. For additional information, refer to the MVW_PP register on page 439.

OBSOLETE

4.2.7 CPU_F Register

Address	Name	Bit 7	Bit 6	Bit 5	Bit 4	Bit 3	Bit 2	Bit 1	Bit 0	Access
x,F7h	CPU_F	PgMode[1:0]			XIO		Carry	Zero	GIE	RL : 02

LEGEND

L The AND F, expr; OR F, expr; and XOR F, expr flag instructions can be used to modify this register.
x An 'x' before the comma in the address field indicates that this register can be read or written to no matter what bank is used.

The M8C Flag Register (CPU_F) provides read access to the M8C flags.

Bits 7 and 6: PgMode[1:0]. PgMode determines how the CUR_PP and IDX_PP registers are used in forming effective RAM addresses for Direct Address mode and Indexed Address mode operands.

Bit 4: XIO. The I/O Bank Select bit, also know as the register bank select bit, is used to select the register bank that is active for a register read or write. This bit allows the PowerPSoC device to have 512 8-bit registers and therefore, can be thought of as the ninth address bit for registers. The address space accessed when the XIO bit is set to '0' is called the ***user space***, while the address space accessed when the XIO bit is set to '1' is called the ***configuration space***.

Bit 2: Carry. The Carry Flag bit is set or cleared in response to the result of several instructions. It can also be manipulated by the flag-logic opcodes (for example, OR F, 4). See the *PSoC Designer Assembly Guide User Manual* for more details.

Bit 1: Zero. The Zero Flag bit is set or cleared in response to the result of several instructions. It can also be manipulated by the flag-logic opcodes (for example, OR F, 2). See the *PSoC Designer Assembly Guide User Manual* for more details.

Bit 0: GIE. The state of the Global Interrupt Enable bit determines whether interrupts (by way of the IRQ) will be recognized by the M8C. This bit is set or cleared by the user, using the flag-logic instructions (for example, OR F, 1). GIE is also cleared automatically by the M8C upon entering the interrupt service routine (ISR), after the flag byte has been stored on the stack, preventing nested interrupts. Note that the bit can be set in an ISR if desired.

For GIE=1, the M8C samples the IRQ input for each instruction. For GIE=0, the M8C ignores the IRQ. For additional information, refer to the CPU_F register on page 464.

OBSOLETE

OBSOLETE

5. Interrupt Controller

This chapter presents the Interrupt Controller and its associated registers. The interrupt controller provides a mechanism for a hardware resource in PowerPSoC Programmable System-on-Chip devices, to change program execution to a new address without regard to the current task being performed by the code being executed. For a complete table of the Interrupt Controller registers, refer to the "Summary Table of the Core Registers" on page 41. For a quick reference of all PowerPSoC registers in address order, refer to the Register Details chapter on page 361.

5.1 Architectural Description

A block diagram of the PowerPSoC Interrupt Controller is shown in Figure 5-1, illustrating the concepts of ***posted interrupts*** and ***pending interrupts***.

Figure 5-1. Interrupt Controller Block Diagram

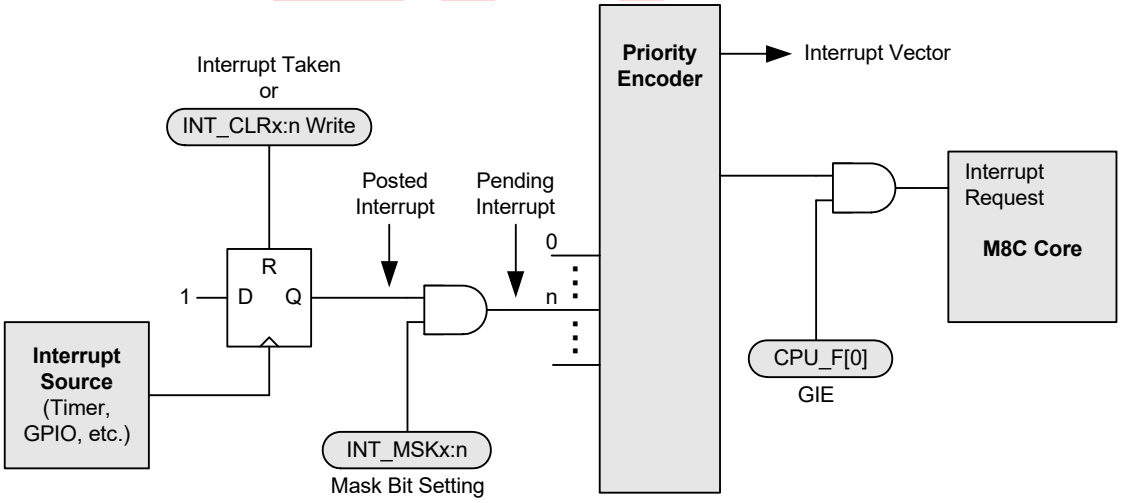

The sequence of events that occur during interrupt processing is as follows.

1. An interrupt becomes active, either because (a) the interrupt condition occurs (for example, a timer expires), (b) a previously posted interrupt is enabled through an update of an interrupt ***mask*** register, or (c) an interrupt is pending and GIE is set from '0' to '1' in the CPU Flag register.
2. The current executing instruction finishes.
3. The internal interrupt routine executes, taking 13 cycles. During this time, the following actions occur:
   - The PCH, PCL, and Flag register (CPU_F) are pushed onto the stack (in that order).
   - The CPU_F register is then cleared. Since this clears the GIE bit to 0, additional interrupts are temporarily disabled.
   - The PCH (PC[15:8]) is cleared to zero.
   - The interrupt vector is read from the interrupt controller and its value is placed into PCL (PC[7:0]). This sets the program counter to point to the appropriate address in the interrupt table (for example, 001Ch for the GPIO interrupt).
4. Program execution vectors to the interrupt table. Typically, a LJMP instruction in the interrupt table sends execution to the user's interrupt service routine (ISR) for this interrupt. (See "Instruction Set Summary" on page 44.)

5. The ISR executes. Note that interrupts are disabled since GIE = 0. In the ISR, interrupts can be re-enabled if desired, by setting GIE = 1 (take care to avoid stack overflow in this case).
6. The ISR ends with a RETI instruction. This pops the Flag register, PCL, and PCH from the stack, restoring those registers. The restored Flag register re-enables interrupts, since GIE = 1 again.
7. Execution resumes at the next instruction, after the one that occurred before the interrupt. However, if there are more pending interrupts, the subsequent interrupts will be processed before the next normal program instruction.

Interrupt Latency. The time between the assertion of an enabled interrupt and the start of its ISR can be calculated using the following equation:

$$\begin{aligned} Latency = \quad & \textbf{Equation 1} \\ & \textit{Time for current instruction to finish} + \\ & \textit{Time for M8C to change program counter to interrupt address} + \\ & \textit{Time for LJMP instruction in interrupt table to execute.} \end{aligned}$$

For example, if the 5-cycle JMP instruction is executing when an interrupt becomes active, the total number of CPU clock cycles before the ISR begins would be as follows:

$$\begin{aligned} & \textit{(1 to 5 cycles for JMP to finish)} + \quad \textbf{Equation 2} \\ & \textit{(13 cycles for interrupt routine)} + \\ & \textit{(7 cycles for LJMP)} = \textit{21 to 25 cycles.} \end{aligned}$$

In the example above, at 24 MHz, 25 clock cycles take 1.042 µs.

Interrupt Priority. The priorities of the interrupts only come into consideration if more than one interrupt is pending during the same instruction cycle. In this case, the priority encoder (see Figure 5-1) generates an interrupt vector for the highest priority interrupt that is pending.

5.1.1 Posted Versus Pending Interrupts

An interrupt is posted when its interrupt conditions occur. This results in the flip-flop in Figure 5-1 clocking in a '1'. The interrupt will remain posted until the interrupt is taken or until it is cleared by writing to the appropriate INT_CLRx register.

A posted interrupt is not pending unless it is enabled by setting its interrupt mask bit (in the appropriate INT_MSKx register). All pending interrupts are processed by the Priority Encoder to determine the highest priority interrupt which will be taken by the M8C if the Global Interrupt Enable bit is set in the CPU_F register.

Disabling an interrupt by clearing its interrupt mask bit (in the INT_MSKx register) does not clear a posted interrupt, nor does it prevent an interrupt from being posted. It simply prevents a posted interrupt from becoming pending.

It is especially important to understand the functionality of clearing posted interrupts, if the configuration of the PowerPSoC device is changed by the application.

For example, if a digital PSoC block is configured as a counter and has posted an interrupt but is later reconfigured to a serial communications receiver, the posted interrupt from the counter will remain. Therefore, if the digital PSoC block's INT_MSKx bit is set after configuring the block as a serial communications receiver, a pending interrupt is generated immediately. To prevent the carryover of posted interrupts from one configuration to the next, the INT_CLRx registers should be used to clear posted interrupts prior to enabling the digital PSoC block.

OBSOLETE

5.2 Application Description

The interrupt controller and its associated registers allow the user's code to respond to an interrupt from almost every functional block in the PowerPSoC devices. Interrupts for all the digital blocks and each of the analog columns are available, as well as interrupts for supply voltage, sleep, variable clocks, a general GPIO (pin) interrupt, bank comparators, digital modulators, and the switching regulator.

The registers associated with the interrupt controller allow interrupts to be disabled either globally or individually. The registers also provide a mechanism by which a user can ***clear*** all pending and posted interrupts, or clear individual posted or pending interrupts. A ***software*** mechanism is provided to set individual interrupts. Setting an interrupt by way of software is very useful during code development, when one may not have the complete hardware system necessary to generate a real interrupt.

The following table lists the interrupts for the CY8CLED0xx0x PowerPSoC devices and the priorities that are available.

Table 5-1. PowerPSoC Device Interrupt Table

Interrupt Priority	Interrupt Address	CY8CLED0xx0x	Interrupt Name
0 (Highest)	0000h	✓	Reset
1	0004h	✓	Supply Voltage Monitor
2	0008h	✓	Analog Column 0
3	000Ch	✓	Analog Column 1
4	0010h		Reserved
5	0014h	✓	UVLO
6	0018h	✓	VC3
7	001Ch	✓	GPIO
8	0020h	✓	PSoC Block DBB00
9	0024h	✓	PSoC Block DBB01
10	0028h	✓	PSoC Block DCB02
11	002Ch	✓	PSoC Block DCB03
12	0030h	✓	PSoC Block DBB10
13	0034h	✓	PSoC Block DBB11
14	0038h	✓	PSoC Block DCB12
15	003Ch	✓	PSoC Block DCB13
16	0040h	✓	Bank Comparator 8
17	0044h	✓	Bank Comparator 9
18	0048h	✓	Bank Comparator 10
19	004Ch	✓	Bank Comparator 11
20	0050h	✓	Bank Comparator 12
21	0054h	✓	Bank Comparator 13
22	0058h	✓	DPWM High Priority
23	005Ch	✓	DPWM Low Priority
24	0060h	✓	I2C
25 (Lowest)	0064h	✓	Sleep Timer

OBSOLETE

5.3 Register Definitions

The following registers are associated with the Interrupt Controller and are listed in address order. The register descriptions have an associated register table showing the bit structure for that register. The bits in the tables that are grayed out are reserved bits and are not detailed in the register descriptions that follow. Reserved bits should always be written with a value of '0'. For a complete table of Interrupt Controller registers, refer to the "Summary Table of the Core Registers" on page 41.

5.3.1 INT_CLRx Registers

Address	Name	Bit 7	Bit 6	Bit 5	Bit 4	Bit 3	Bit 2	Bit 1	Bit 0	Access
0,DAh	INT_CLR0	VC3	Sleep	GPIO	UVLO		Analog 1	Analog 0	V Monitor	RW : 00
0,DB	INT_CLR1	DCB13	DCB12	DBB11	DBB10	DCB03	DCB02	DBB01	DBB00	RW : 00
0,DCh	INT_CLR2	PWMLP	PWMHP	CMP13	CMP12	CMP11	CMP10	CMP9	CMP8	RW : 00
0,DDh	INT_CLR3								I2C	RW : 00

The Interrupt Clear Registers (INT_CLRx) are used to enable the individual interrupt sources' ability to clear posted interrupts.

There are four interrupt clear registers (INT_CLR0, INT_-CLR1, INT_CLR2, and INT_CLR3) which may be referred to in general as INT_CLRx.The INT_CLRx registers are similar to the INT_MSKx registers in that they hold a bit for each interrupt source. Functionally the INT_CLRx registers are similar to the INT_VC register, although their operation is completely independent. When an INT_CLRx register is read, any bits that are set indicates an interrupt has been posted for that hardware resource. Therefore, reading these registers gives the user the ability to determine all posted interrupts.

The Enable Software Interrupt (ENSWINT) bit in INT_MSK3[7] determines the way an individual bit value written to an INT_CLR0 register is interpreted. When ENSWINT is cleared (the default state), writing 1's to an INT_CLRx register has no effect. However, writing 0's to an INT_CLRx register, when ENSWINT is cleared, will cause the corresponding interrupt to clear. If the ENSWINT bit is set, any 0's written to the INT_CLRx registers are ignored. However, 1's written to an INT_CLRx register, while ENSWINT is set, will cause an interrupt to post for the corresponding interrupt.

Note When using the INT_CLRx register to post an interrupt, the hardware interrupt source, such as a digital clock, must not have its interrupt output high. Therefore, it may be difficult to use software interrupts with interrupt sources that do not have enables such as VC3

Software interrupts can aid in debugging interrupt service routines by eliminating the need to create system level interactions that are sometimes necessary to create a hardware-only interrupt.

5.3.1.1 INT_CLR0 Register

Bit 7: VC3. This bit allows posted VC3 interrupts to be read, cleared, or set.

Bit 6: Sleep. This bit allows posted sleep interrupts to be read, cleared, or set.

Bit 5: GPIO. This bit allows posted GPIO interrupts to be read, cleared, or set.

Bit 4: UVLO. This bit allows posted switching regulator UVLO interrupts to be read, cleared, or set.

Bit 2: Analog 1. This bit allows posted analog column 1 interrupts to be read, cleared, or set.

Bit 1: Analog 0. This bit allows posted analog column 0 interrupts to be read, cleared, or set.

Bit 0: V Monitor. This bit allows posted V monitor interrupts to be read, cleared, or set.

For additional information, refer to the INT_CLR0 register on page 445.

OBSOLETE

5.3.1.2 INT_CLR1 Register

Bit 7: DCB13. This bit allows posted DCB13 interrupts to be read, cleared, or set for row 1 block 3.

Bit 6: DCB12. This bit allows posted DCB12 interrupts to be read, cleared, or set for row 1 block 2.

Bit 5: DBB11. This bit allows posted DBB11 interrupts to be read, cleared, or set for row 1 block 1.

Bit 4: DBB10. This bit allows posted DBB10 interrupts to be read, cleared, or set for row 1 block 0.

Bit 3: DCB03. This bit allows posted DCB03 interrupts to be read, cleared, or set for row 0 block 3.

Bit 2: DCB02. This bit allows posted DCB02 interrupts to be read, cleared, or set for row 0 block 2.

Bit 1: DBB01. This bit allows posted DBB01 interrupts to be read, cleared, or set for row 0 block 1.

Bit 0: DBB00. This bit allows posted DBB00 interrupts to be read, cleared, or set for row 0 block 0.

For additional information, refer to the INT_CLR1 register on page 447.

5.3.1.3 INT_CLR2 Register

Bit 7: PWMLP. This bit allows posted low priority PWM interrupts to be read, cleared, or set.

Bit 6: PWMHP. This bit allows posted high priority PWM interrupts to be read, cleared, or set.

Bit 5: CMP13. This bit allows posted comparator bank comparator 13 interrupts to be read, cleared, or set.

Bit 4: CMP12. This bit allows posted comparator bank comparator 12 interrupts to be read, cleared, or set.

Bit 3: CMP11. This bit allows posted comparator bank comparator 11 interrupts to be read, cleared, or set.

Bit 2: CMP10. This bit allows posted comparator bank comparator 10 interrupts to be read, cleared, or set.

Bit 1: CMP9. This bit allows posted comparator bank comparator 9 interrupts to be read, cleared, or set.

Bit 0: CMP8. This bit allows posted comparator bank comparator 8 interrupts to be read, cleared, or set.

For additional information, refer to the INT_CLR2 register on page 449.

5.3.1.4 INT_CLR3 Register

Bit 0: I2C. This bit allows posted I2C interrupts to be read, cleared, or set

For additional information, refer to the INT_CLR3 register on page 451.

OBSOLETE

5.3.2 INT_MSKx Registers

Address	Name	Bit 7	Bit 6	Bit 5	Bit 4	Bit 3	Bit 2	Bit 1	Bit 0	Access
0,DEh	INT_MSK3	ENSWINT							I2C	RW : 00
0,DFh	INT_MSK2	PWMLP	PWMHP	CMP13	CMP12	CMP11	CMP10	CMP9	CMP8	RW : 00
0,E0h	INT_MSK0	VC3	Sleep	GPIO	UVLO		Analog 1	Analog 0	V Monitor	RW : 00
0,E1h	INT_MSK1	DCB13	DCB12	DBB11	DBB10	DCB03	DCB02	DBB01	DBB00	RW : 00

The Interrupt Mask Registers (INT_MSKx) are used to enable the individual interrupt sources' ability to create pending interrupts.

There are four interrupt ***mask*** registers (INT_MSK0, INT_MSK1, INT_MSK2, and INT_MSK3) which may be referred to in general as INT_MSKx. If cleared, each bit in an INT_MSKx register prevents a posted interrupt from becoming a pending interrupt (input to the priority encoder). However, an interrupt can still post even if its mask bit is zero. All INT_MSKx bits are independent of all other INT_MSKx bits.

If an INT_MSKx bit is set, the interrupt source associated with that mask bit may generate an interrupt that will become a pending interrupt. For example, if INT_MSK0[5] is set and at least one GPIO pin is configured to generate an interrupt, the interrupt controller will allow a GPIO interrupt request to post and become a pending interrupt for the M8C to respond to. If a higher priority interrupt is generated before the M8C responds to the GPIO interrupt, the higher priority interrupt will be responded to and not the GPIO interrupt.

Each interrupt source may require configuration at a block level. Refer to the other chapters in this manual for information on how to configure an individual interrupt source.

5.3.2.1 INT_MSK3 Register

Bit 7: ENSWINT. This bit is a special non-mask bit that controls the behavior of the INT_CLRx registers. See the INT_CLRx register in this section for more information.

Bit 0: I2C. This bit allows posted I2C interrupts to be read, masked, or set

For additional information, refer to the INT_MSK3 register on page 452.

5.3.2.2 INT_MSK2 Register

The definition of each bit is provided below.

Bit 7: PWMLP. This bit allows posted PWM block low priority interrupts to be read, masked, or set.

Bit 6: PWMHP. This bit allows posted PWM block high priority interrupts to be read, masked, or set.

Bit 5: CMP13. This bit allows posted comparator bank, comparator 13 interrupts to be read, masked, or set.

Bit 4: CMP12. This bit allows posted comparator bank, comparator 12 interrupts to be read, masked, or set.

Bit 3: CMP11. This bit allows posted comparator bank, comparator 11 interrupts to be read, masked, or set.

Bit 2: CMP10. This bit allows posted comparator bank, comparator 10 interrupts to be read, masked, or set.

Bit 1: CMP9. This bit allows posted comparator bank, comparator 9 interrupts to be read, masked, or set.

Bit 0: CMP8. This bit allows posted comparator bank, comparator 8 interrupts to be read, masked, or set.

For additional information, refer to the INT_MSK2 register on page 453.

Preliminary

5.3.2.3 INT_MSK0 Register

The definition of each bit is provided below.

Bit 7: VC3. This bit allows posted VC3 interrupts to be read, masked, or set.

Bit 6: Sleep. This bit allows posted sleep interrupts to be read, masked, or set.

Bit 5: GPIO. This bit allows posted GPIO interrupts to be read, masked, or set.

Bit 4: UVLO. This bit allows posted switching regulator under voltage lockout interrupts to be read, masked, or set.

Bit 2: Analog 1. This bit allows posted analog column 1 interrupts to be read, masked, or set.

Bit 1: Analog 0. This bit allows posted analog column 0 interrupts to be read, masked, or set.

Bit 0: V Monitor. This bit allows posted V monitor interrupts to be read, masked, or set.

For additional information, refer to the INT_MSK0 register on page 454.

5.3.2.4 INT_MSK1 Register

The definition of each bit is provided below.

Bit 7: DCB13. This bit allows posted DCB13 interrupts to be read, masked, or set for row 1 block 3.

Bit 6: DCB12. This bit allows posted DCB12 interrupts to be read, masked, or set for row 1 block 2.

Bit 5: DBB11. This bit allows posted DBB11 interrupts to be read, masked, or set for row 1 block 1.

Bit 4: DBB10. This bit allows posted DBB10 interrupts to be read, masked, or set for row 1 block 0.

Bit 3: DCB03. This bit allows posted DCB03 interrupts to be read, masked, or set for row 0 block 3.

Bit 2: DCB02. This bit allows posted DCB02 interrupts to be read, masked, or set for row 0 block 2.

Bit 1: DBB01. This bit allows posted DBB01 interrupts to be read, masked, or set for row 0 block 1.

Bit 0: DBB00. This bit allows posted DBB00 interrupts to be read, masked, or set for row 0 block 0.

For additional information, refer to the INT_MSK1 register on page 455.

OBSOLETE

5.3.3 INT_VC Register

Address	Name	Bit 7	Bit 6	Bit 5	Bit 4	Bit 3	Bit 2	Bit 1	Bit 0	Access
0,E2h	INT_VC	Pending Interrupt[7:0]								RC : 00

LEGEND
C Clearable register or bits.

The Interrupt Vector Clear Register (INT_VC) returns the next pending interrupt and clears all pending interrupts when written.

Bits 7 to 0: Pending Interrupt[7:0]. When the register is read, the ***least significant byte (LSB)***, of the highest priority pending interrupt, is returned. For example, if the GPIO and I2C interrupts were pending and the INT_VC register was read, the value 1Ch would be read. However, if no interrupt were pending, the value 00h would be returned. This is the reset vector in the interrupt table; however, reading 00h from the INT_VC register should not be considered an indication that a system reset is pending. Rather, reading 00h from the INT_VC register simply indicates that there are no pending interrupts. The highest priority interrupt, indicated by the value returned by a read of the INT_VC register, is removed from the list of pending interrupts when the M8C services an interrupt.

Reading the INT_VC register has limited usefulness. If interrupts are enabled, a read to the INT_VC register would not be able to determine that an interrupt was pending before the interrupt was actually taken. However, while in an interrupt, a user may wish to read the INT_VC register to see what the next interrupt will be. When the INT_VC register is written, with any value, all pending and posted interrupts are cleared by asserting the clear line for each interrupt.

For additional information, refer to the INT_VC register on page 456.

5.3.4 CPU_F Register

Address	Name	Bit 7	Bit 6	Bit 5	Bit 4	Bit 3	Bit 2	Bit 1	Bit 0	Access
x,F7h	CPU_F	PgMode[1:0]			XIO		Carry	Zero	GIE	RL : 02

LEGEND
L The AND F, expr; OR F, expr; and XOR F, expr flag instructions can be used to modify this register.
x An “x” before the comma in the address field indicates that this register can be read or written to no matter what bank is used.

The M8C Flag Register (CPU_F) provides read access to the M8C flags. Note that only the GIE (Global Interrupt Enable) bit is related to the interrupt controller.

Bits 7 to 1. The CPU_F register holds bits that are used by different resources. For information on the other bits in this register, refer to the CPU Core (M8C) chapter on page 43.

Bit 0: GIE. The state of the Global Interrupt Enable bit determines whether interrupts (by way of the IRQ) will be recognized by the M8C. This bit is set or cleared by the user, using the flag-logic instructions (for example, OR F, 1). GIE is also cleared automatically by the M8C upon entering the interrupt service routine (ISR), after the flag byte has been stored on the stack, preventing nested interrupts. Note that the bit can be set in an ISR if desired.

For GIE=1, the M8C samples the IRQ input for each instruction. For GIE=0, the M8C ignores the IRQ.

For additional information, refer to the CPU_F register on page 464.

OBSOLETE

6. General Purpose I/O (GPIO)

This chapter discusses the General Purpose I/O (GPIO) and its associated registers, which is the circuit responsible for interfacing to the I/O pins of a PowerPSoC device. The GPIO blocks provide the interface between the M8C core and the outside world. They offer a large number of configurations to support several types of ***input/output (I/O)*** operations for both digital and analog systems. For a complete table of the GPIO registers, refer to the "Summary Table of the Core Registers" on page 41. For a quick reference of all PowerPSoC registers in address order, refer to the Register Details chapter on page 361.

6.1 Architectural Description

The GPIO contains input buffers, output drivers, register bit storage, and configuration logic for connecting the PowerPSoC device to the outside world.

I/O Ports are arranged with (up to) eight bits per port. Each full port contains eight identical GPIO blocks, with connections to identify a unique address and register bit number for each block. Each GPIO block can be used for the following types of I/O:

- Digital I/O (digital input and output controlled by software)
- Global I/O (digital PSoC block input and output)
- Analog I/O (analog PSoC block input and output)

Each I/O pin also has several drive modes, as well as interrupt capabilities. While all GPIO pins are identical and provide digital I/O, some pins may not connect internally to analog functions.

The main block diagram for the GPIO block is shown in Figure 6-1. Note that some pins do not have all of the functionality shown, depending on internal connections.

This device contains the capability to connect any GPIO (Port 2, Port 1, and Port 0) to an internal analog bus. This is described in the I/O Analog Multiplexer chapter on page 265. FN0 is identical to Port 0, Port 1, and Port 2 except that it is not connected to the global analog or digital bus. FN0 GPIO pins connect to power peripherals as described in the Analog MUX chapter on page 301 and the Digital MUX chapter on page 305.

6.1.1 Digital I/O

One of the basic operations of the GPIO ports is to allow the M8C to send information out of the PowerPSoC device and get information into the M8C from outside the PowerPSoC device. This is accomplished by way of the port data register (FN0DR/PRTxDR). Writes from the M8C to the FN0DR/PRTxDR register store the data state, one bit per GPIO. In the standard non-bypass mode, the pin drivers drive the pin in response to this data bit, with a drive strength determined by the Drive mode setting (see Figure 6-1). The actual voltage on the pin depends on the Drive mode and the external ***load***.

The M8C can read the value of a port by reading the FN0DR/PRTxDR register address. When the M8C reads the FN0DR/PRTxDR register address, the current value of the pin voltage is translated into a logic value and returned to the M8C. Note that the pin voltage can represent a different logic value than the last value written to the FN0DR/PRTxDR register. This is an important distinction to remember in situations such as the use of a read modify write to a FN0DR/PRTxDR register. Examples of read modify write instructions include ***AND***, ***OR***, and ***XOR***.

The following is an example of how a read modify write, to a FN0DR/PRTxDR register, could have an unexpected and even indeterminate result in certain systems. Consider a scenario where all bits of Port 1 on the PowerPSoC device are in the strong 1 resistive 0 drive mode; so that in some cases, the system the PowerPSoC is in may pull up one of the bits.

```
mov   reg[PRT1DR], 0x00
or    reg[PRT1DR], 0x80
```

OBSOLETE

In the first line of code above, writing a 0x00 to the port will not affect any bits that happen to be driven by the system the PowerPSoC is in. However, in the second line of code, it can not guarantee that only bit 7 will be the one set to a strong 1. Because the OR instruction will first read the port, any bits that are in the pull up state will be read as a '1'. These ones will then be written back to the port. When this happens, the pin will go in to a strong 1 state; therefore, if the pull up condition ends in the system, the PowerPSoC will keep the pin value at a logic 1.

6.1.2 Global I/O

The GPIO ports are also used to interconnect signals to and from the digital PSoC blocks, as global inputs or outputs.

The global I/O feature of each GPIO (port pin) is off by default. To access the feature, two parameters must be changed. To configure a GPIO as a global input, the port global select bit must be set for the desired GPIO using the PRTxGS register. This sets BYP = 1 in Figure 6-1 and disconnects the output of the FN0DR/PRTxDR register from the pin. Also, the Drive mode for the GPIO must be set to the digital High Z state. (Refer to the "FN0DMx/PRTxDMx Registers" on page 85 for more information.) To configure a GPIO as a global output, the port global select bit must again be set. But in this case, the drive state must be set to any of the non-High Z states.

6.1.3 Analog Input

Analog signals can pass into the PSoC device core from PowerPSoC device pins through the block's AOUT pin. This provides a resistive ***path*** (~300 ohms) directly through the GPIO block. For analog modes, the GPIO block is typically configured into a High ***impedance*** Analog Drive mode (High Z). The mode turns off the Schmitt trigger on the input path, which may reduce power consumption and decrease internal switching noise when using a particular I/O as an analog input. Refer to the Electrical Specifications chapter in the PowerPSoC device data sheet.

OBSOLETE

Figure 6-1. GPIO Block Diagram

Drive Modes

DM2	DM1	DM0	Drive Mode	Diagram Number	Data = 0	Data = 1
0	0	0	Resistive Pull Down	0	Resistive	Strong
0	0	1	Strong Drive	1	Strong	Strong
0	1	0	High Impedance	2	High Z	High Z
0	1	1	Resistive Pull Up	3	Strong	Resistive
1	0	0	Open Drain, Drives High	4	High Z	Strong (Slow)
1	0	1	Slow Strong Drive	5	Strong (Slow)	Strong (Slow)
1	1	0	High Impedance Analog	6	High Z	High Z
1	1	1	Open Drain, Drives Low	7	Strong (Slow)	High Z

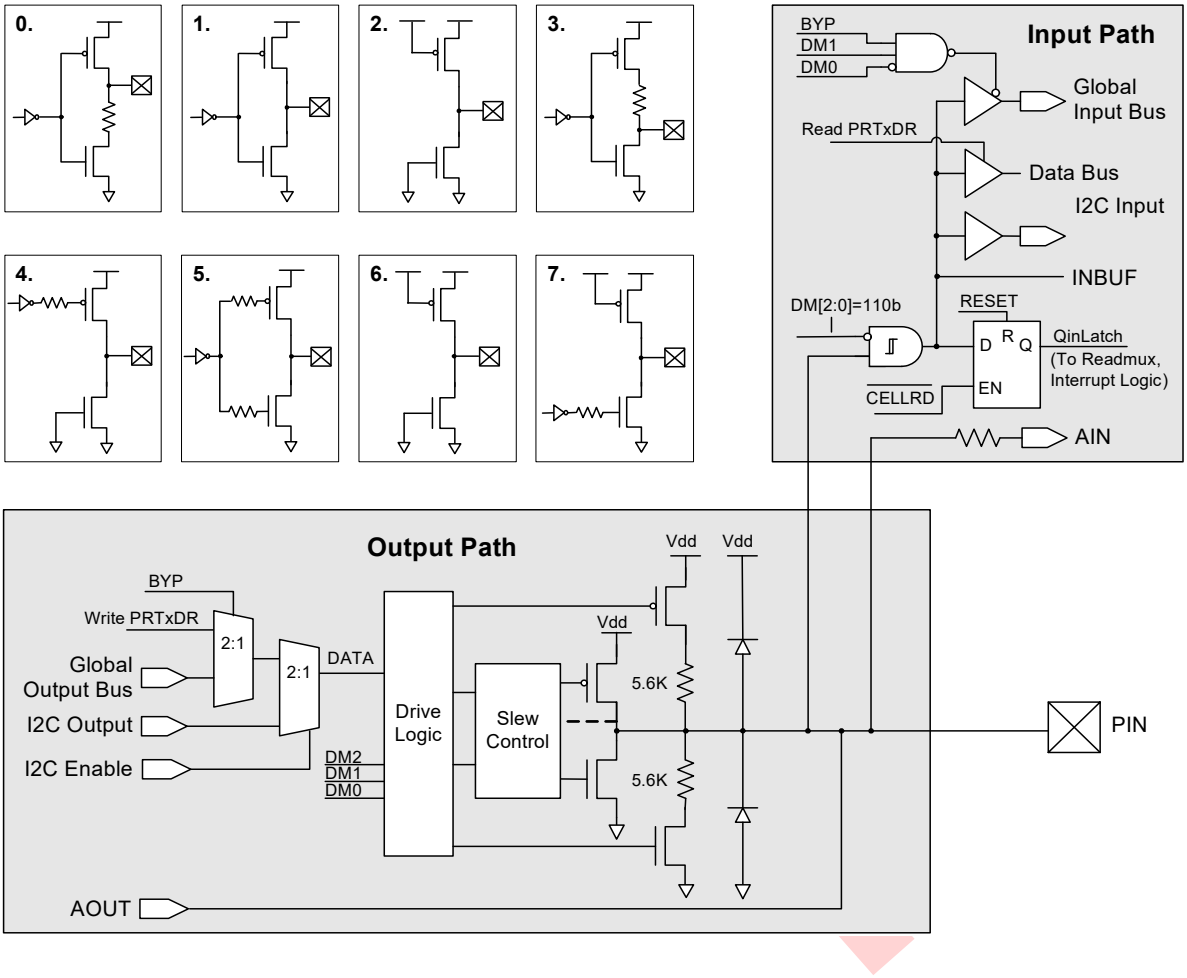

6.1.4 GPIO Block Interrupts

Each GPIO block can be individually configured for interrupt capability. Blocks are configured by pin interrupt enables and also by selection of the interrupt state. Blocks can be set to interrupt when the pin is high, low, or when it changes from the last time it was read. The block provides an open-drain interrupt output (INTO) that is connected to other GPIO blocks in a wire-OR fashion.

All pin interrupts that are wire-OR'ed together are tied to the same system GPIO interrupt. Therefore, if interrupts are enabled on multiple pins, the user's interrupt service routine must provide a mechanism to determine which pin was the source of the interrupt.

Using a GPIO interrupt requires the following steps:

1. Set the Interrupt mode in the GPIO pin block.
2. Enable the bit interrupt in the GPIO block.
3. Set the mask bit for the (global) GPIO interrupt.
4. Assert the overall Global Interrupt Enable.

The first two steps, bit interrupt enable and Interrupt mode, are set at the GPIO block level (that is, at each port pin), by way of the block's configuration registers.

The last two steps are common to all interrupts and are described in the Interrupt Controller chapter on page 71.

At the GPIO block level, asserting the INTO line depends only on the bit interrupt enable and the state of the pin relative to the chosen Interrupt mode. At the PowerPSoC device level, due to their wire-OR nature, the GPIO interrupts are neither true edge-sensitive interrupts nor true level-sensitive interrupts. They are considered edge-sensitive for asserting, but level-sensitive for release of the wire-OR interrupt line.

If no GPIO interrupts are asserting, a GPIO interrupt will occur whenever a GPIO pin interrupt enable is set and the GPIO pin transitions, if not already transitioned, appropriately high or low, to match the interrupt mode configuration. Once this happens, the INTO line will pull low to assert the GPIO interrupt. This assumes the other system-level enables are on, such as setting the global GPIO interrupt enable and the Global Interrupt Enable. Setting the pin interrupt enable may immediately assert INTO, if the Interrupt mode conditions are already being met at the pin.

Once INTO pulls low, it will continue to hold INTO low until one of these conditions change: (a) the pin interrupt enable is cleared; (b) the voltage at pin transitions to the opposite state; (c) in interrupt-on-change mode, the GPIO data register is read, thus setting the local interrupt level to the opposite state; or (d) the Interrupt mode is changed so that the current pin state does not create an interrupt. Once one of these conditions is met, the INTO releases. At this point, another GPIO pin (or this pin again) could assert its INTO pin, pulling the common line low to assert a new interrupt.

Note the following behavior from this level-release feature. If one pin is asserting INTO and then a second pin asserts its INTO, when the first pin releases its INTO, the second pin is already driving INTO and thus no change is seen (that is, no new interrupt would be asserted on the GPIO interrupt). Care must be taken, using polling or the states of the GPIO pin and Global Interrupt Enables, to catch all interrupts among a set of wire-OR GPIO blocks.

Figure 6-2 shows the interrupt logic portion of the block.

Figure 6-2. GPIO Interrupt Logic Diagram

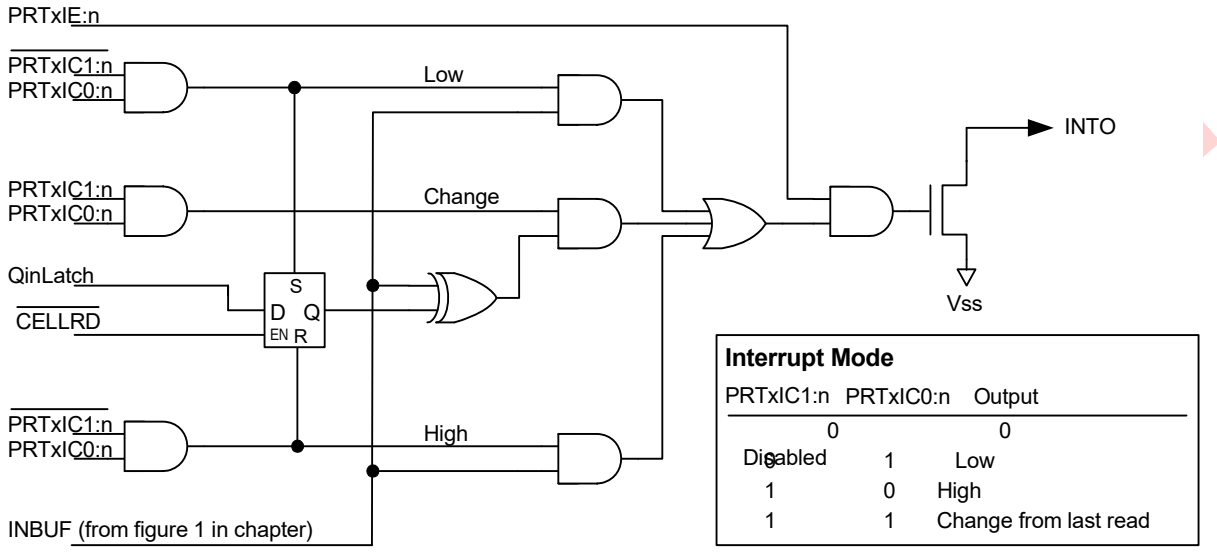

6.2 Register Definitions

The following registers are associated with the General Purpose I/O (GPIO) and are listed in address order. The register descriptions in this section have an associated register table showing the bit structure for that register. For a complete table of GPIO registers, refer to the "Summary Table of the Core Registers" on page 41.

FN0 on this device is a 4-bit wide port. The register bits for any port bit that is not available for a given package are reserved.

For a selected GPIO block, the individual registers are addressed in the Summary Table of the Core Registers. In the register names, the 'x' is the port number, configured at the PowerPSoC device level (x = 0 to 7 typically). All register values are readable, except for the FN0DR/PRTxDR register; reads of this register return the pin state instead of the register bit state.

6.2.1 FN0DR/PRTxDR Registers

Address	Name	Bit 7	Bit 6	Bit 5	Bit 4	Bit 3	Bit 2	Bit 1	Bit 0	Access
0,xxh	FN0DR/ PRTxDR	Data[7:0]								RW : 00

LEGEND
xx An "x" after the comma in the address field indicates that there are multiple instances of the register. For an expanded address listing of these registers, refer to the "Core Register Summary" on page 41.

The Port Data Register (FN0DR/PRTxDR) allows for write or read access of the current logical equivalent of the voltage on the pin.

Bits 7 to 0: Data[7:0]. Writing the FN0DR/PRTxDR register bits set the output drive state for the pin to high (for DIN=1) or low (DIN=0), unless a bypass mode is selected (either I2C Enable=1 or the global select register written high).

Reading the FN0DR/PRTxDR register returns the actual pin state, as seen by the input buffer. This may not be the same as the expected output state, if the load pulls the pin more strongly than the pin's configured output drive. See "Digital I/O" on page 79 for a detailed discussion of digital I/O.

For additional information, refer to the FN0DR/PRTxDR register on page 363.

6.2.2 FN0IE/PRTxIE Registers

Address	Name	Bit 7	Bit 6	Bit 5	Bit 4	Bit 3	Bit 2	Bit 1	Bit 0	Access
0,xxh	FN0IE/PRTxIE	Interrupt Enables[7:0]								RW : 00

LEGEND
xx An "x" after the comma in the address field indicates that there are multiple instances of the register. For an expanded address listing of these registers, refer to the "Core Register Summary" on page 41.

The Port Interrupt Enable Register (FN0IE/PRTxIE) is used to enable/disable the interrupt enable internal to the GPIO block.

Bits 7 to 0: Interrupt Enables[7:0]. A '1' enables the INTO output at the block and a '0' disables INTO so it is only High Z.

6.2.3 FN0GS/PRTxGS Registers

Address	Name	Bit 7	Bit 6	Bit 5	Bit 4	Bit 3	Bit 2	Bit 1	Bit 0	Access
0,xxh	FN0GS/ PRTxGS	Global Select[7:0]								RW : 00

LEGEND
xx An "x" after the comma in the address field indicates that there are multiple instances of the register. For an expanded address listing of these registers, refer to the "Core Register Summary" on page 41.

The Port Global Select Register (FN0GS/PRTxGS) is used to select the block for connection to global inputs or outputs.

Bits 7 to 0:Global Select[7:0]. Writing this register high enables the global bypass (BYP = 1 in Figure 6-1). If the Drive mode is set to digital High Z (DM[2:0] = 010b), then the pin is selected for global input (PIN drives to the Global Input Bus). In non-High Z modes, the block is selected for global output (the Global Output Bus drives to PIN), bypassing the data register value (assuming I2C Enable = 0).

OBSOLETE

If the FN0GS/PRTxGS register is written to zero, the global in/out function is disabled for the pin and the pin reflects the value of FN0DR/PRT_DR.

For additional information, refer to the FN0GS/PRTxGS register on page 365.

OBSOLETE

6.2.4 FN0DMx/PRTxDMx Registers

Address	Name	Bit 7	Bit 6	Bit 5	Bit 4	Bit 3	Bit 2	Bit 1	Bit 0	Access
0,xxh	FN0DM2/ PRTxDM2	Drive Mode 2[7:0]								RW : FF
1,xxh	FN0DM0/ PRTxDM0	Drive Mode 0[7:0]								RW : 00
1,xxh	FN0DM1/ PRTxDM1	Drive Mode 1[7:0]								RW : FF

LEGEND
xx An "x" after the comma in the address field indicates that there are multiple instances of the register. For an expanded address listing of these registers, refer to the "Core Register Summary" on page 41.

The Port Drive Mode Bit Registers (FN0DMx/PRTxDMx) are used to specify the Drive mode for GPIO pins.

Bits 7 to 0: Drive Mode x[7:0]. In the FN0DMx/PRTxDMx registers there are eight possible drive modes for each port pin. Three mode bits are required to select one of these modes, and these three bits are spread into three different registers (FN0DM0/PRTxDM0, FN0DM1/PRTxDM1, and FN0DM2/PRTxDM2). The bit position of the effected port pin (for example, Pin[2] in Port 0) is the same as the bit position of each of the three drive mode register bits that control the Drive mode for that pin (for example, bit[2] in FN0DM0/ PRT0DM0, bit[2] in FN0DM1/PRT0DM1, and bit[2] in FN0DM2/PRT0DM2). The three bits from the three registers are treated as a group. These are referred to as DM2, DM1, and DM0, or together as DM[2:0]. Drive modes are shown in Table 6-1.

For analog I/O, the Drive mode should be set to one of the High Z modes, either 010b or 110b. The 110b mode has the advantage that the block's digital input buffer is disabled, so no ***crowbar*** current flows even when the analog input is not close to either power rail. When digital inputs are needed on the same pin as analog inputs, the 010b Drive mode should be used. If the 110b Drive mode is used, the pin will always be read as a zero by the CPU and the pin will not be able to generate a useful interrupt. (It is not strictly required that a High Z mode be selected for analog operation.)

For global input modes, the Drive mode must be set to 010b.

Table 6-1. Pin Drive Modes

Drive Modes			Pin State	Description
DM2	DM1	DM0		
0	0	0	Resistive pull down	Strong high, resistive low
0	0	1	Strong drive	Strong high, strong low
0	1	0	High impedance	High Z high and low, digital input enabled
0	1	1	Resistive pull up	Resistive high, strong low
1	0	0	Open drain high	Slow strong high, High Z low
1	0	1	Slow strong drive	Slow strong high, slow strong low
1	1	0	High impedance, analog (**reset state**)	High Z high and low, digital input disabled (for zero power) (**reset state**)
1	1	1	Open drain low	Slow strong low, High Z high

The GPIO provides a default Drive mode of high impedance, analog (High Z). This is achieved by forcing the reset state of all FN0DM1/PRTxDM1 and FN0DM2/PRTxDM2 registers to FFh.

The resistive drive modes place a ***resistance*** in series with the output, for low outputs (mode 000b) or high outputs (mode 011b). Strong Drive mode 001b gives the fastest edges at high DC drive strength. Mode 101b gives the same drive strength but with slower edges. The open-drain modes (100b and 111b) also use the slower edge rate drive. These modes enable open-drain functions such as I2C mode 111b (although the slow edge rate is not slow enough to meet the I2C fast mode specification).

For additional information, refer to the FN0DM2/PRTxDM2 register on page 366, the FN0DM0/PRTxDM0 register on page 468, and the FN0DM1/PRTxDM1 register on page 469.

CONFIDENTIAL

6.2.5 FN0ICx/PRTxICx Registers

Address	Name	Bit 7	Bit 6	Bit 5	Bit 4	Bit 3	Bit 2	Bit 1	Bit 0	Access
1,xxh	FN0IC0/ PRTxIC0	Interrupt Control 0[7:0]								RW : 00
1,xxh	FN0IC1/ PRTxIC1	Interrupt Control 1[7:0]								RW : 00

LEGEND
xx An "x" after the comma in the address field indicates that there are multiple instances of the register. For an expanded address listing of these registers, refer to the "Core Register Summary" on page 41.

The Port Interrupt Control Registers (FN0IC1/PRTxIC1 and FN0IC0/PRTxIC0) are used to specify the Interrupt mode for GPIO pins.

Bits 7 to 0: Interrupt Control x[7:0]. In the FN0ICx/PRTxICx registers, the Interrupt mode for the pin is determined by bits in these two registers. These are referred to as IC1 and IC0, or together as IC[1:0].

There are four possible interrupt modes for each port pin. Two mode bits are required to select one of these modes and these two bits are spread into two different registers (FN0IC0/PRTxIC0 and FN0IC1/PRTxIC1). The bit position of the effected port pin (for example, Pin[2] in Port 0) is the same as the bit position of each of the interrupt control register bits that control the Interrupt mode for that pin (for example, bit[2] in FN0IC0/PRT0IC0 and bit[2] in FN0IC1/PRT0IC1). The two bits from the two registers are treated as a group.

The Interrupt mode must be set to one of the non-zero modes listed in Table 6-2, in order to get an interrupt from the pin.

The GPIO Interrupt mode "disabled" (00b) disables interrupts from the pin, even if the GPIO's bit interrupt enable is on (from the FN0IE/PRTxIE register).

Interrupt mode 01b means that the block will assert the interrupt line (INTO) when the pin voltage is low, providing the block's bit interrupt enable line is set (high).

Interrupt mode 10b means that the block will assert the interrupt line (INTO) when the pin voltage is high, providing the block's bit interrupt enable line is set (high).

Interrupt mode 11b means that the block will assert the interrupt line (INTO) when the pin voltage is the opposite of the last state read from the pin, providing the block's bit interrupt enable line is set high. This mode switches between low mode and high mode, depending on the last value that was read from the port during reads of the data register (FN0DR/PRTxDR). If the last value read from the GPIO was '0', the GPIO will subsequently be in Interrupt High mode. If the last value read from the GPIO was '1', the GPIO will then be in Interrupt Low mode.

Table 6-2. GPIO Interrupt Modes

Interrupt Modes		Description
IC1	IC0	
0	0	Bit interrupt disabled, INTO de-asserted
0	1	Assert INTO when PIN = low
1	0	Assert INTO when PIN = high
1	1	Assert INTO when PIN = change from last read

Figure 6-3. GPIO Interrupt Mode 11b

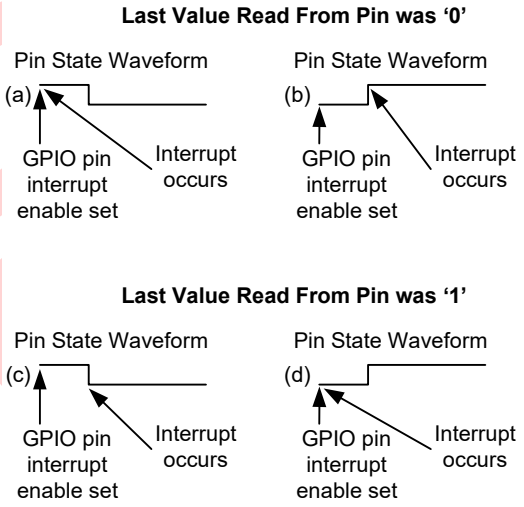

Figure 6-3 assumes that the GIE is set, GPIO interrupt mask is set, and that the GPIO Interrupt mode has been set to 11b. The Change Interrupt mode is different from the other modes, in that it relies on the value of the GPIO's read latch to determine if the pin state has changed. Therefore, the port that contains the GPIO in question must be read during every interrupt service routine. If the port is not read, the Interrupt mode will act as if it is in high mode when the latch value is '0' and low mode when the latch value is '1'.

For additional information, refer to the FN0IC0/PRTxIC0 register on page 470 and the FN0IC1/PRTxIC1 register on page 471.

7. Analog Output Drivers

This chapter presents the Analog Output Drivers and their associated register. The analog output drivers provide a means for driving analog signals off the PowerPSoC device. For a quick reference of all PowerPSoC registers in address order, refer to the Register Details chapter on page 361. For information on the analog system, refer to the "Analog System" on page 161.

7.1 Architectural Description

The CY8CLED0xx0x PowerPSoC devices have two analog drivers used to output analog values on port pins.

Table 7-1. PowerPSoC Analog Output Drivers

Port Pin	CY8CLED0xx0x
P0[5]	✓
P0[3]	✓

Each of these drivers is a resource available to all the ***analog blocks*** in a particular analog column. Therefore, the number of analog output drivers will match the number of analog columns in a device. The user must select no more than one analog block per column to drive a signal on its analog output bus (ABUS), to serve as the input to the analog driver for that column. The output from the analog output driver for each column can be enabled and disabled using the Analog Output Driver register ABF_CR0. If the analog output driver is enabled, then it must have an analog block driving the ABUS for that column. Otherwise, the analog output driver can enter a high current consumption mode.

Figure 7-1 illustrates the drivers and their relationship within the analog array. For a detailed drawing of the analog output drivers in relation to the analog system, refer to the Analog Input Configuration chapter on page 185.

Figure 7-1. Analog Output Drivers

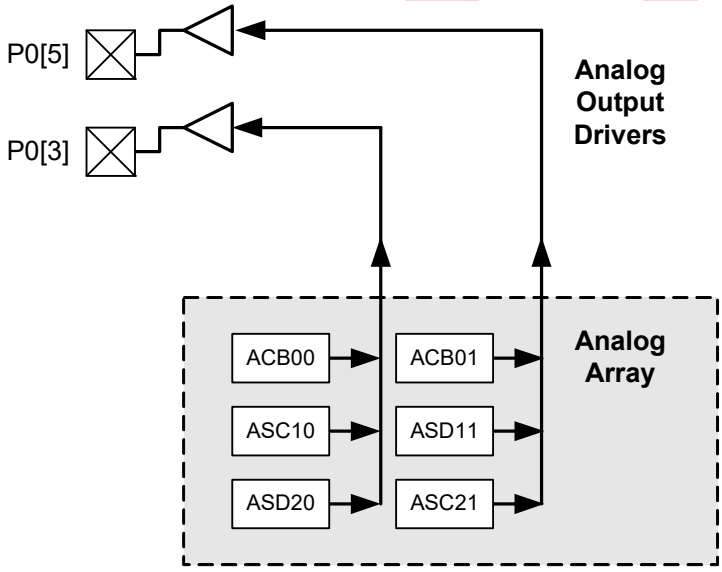

OBSOLETE

7.2 Register Definitions

The following register is associated with the Analog Output Drivers. The register description has an associated register table showing the bit structure of the register. The bits that are grayed out in the table below are reserved bits and are not detailed in the register description that follows. Reserved bits should always be written with a value of '0'.

7.2.1 ABF_CR0 Register

Add.	Name	Bit 7	Bit 6	Bit 5	Bit 4	Bit 3	Bit 2	Bit 1	Bit 0	Access
1,62h	ABF_CR0	ACol1Mux		ABUF1EN		ABUF0EN		Bypass	PWR	RW : 00

The Analog Output Buffer Control Register 0 (ABF_CR0) controls analog input muxes from Port 0 and the output buffer amplifiers that drive column outputs to device pins.

For more information on bit 7, see the Analog Input Configuration chapter on page 185.

Bit 7: ACol1MUX. A mux selects the output of column 0 input mux or column 1 input mux. When set, this bit sets the column 1 input to column 0 input mux output.

Bits 5, 3: ABUFxEN. These bits enable or disable the column output amplifiers.

Bit 1: Bypass. Bypass mode connects the analog output driver input directly to the output. When this bit is set, all analog output drivers will be in bypass mode. This is a high impedance connection used primarily for measurement and calibration of internal references. Use of this feature is not recommended for customer designs.

Bit 0: PWR. This bit is used to set the power level of the analog output drivers. When this bit is set, all of the analog output drivers will be in a High Power mode.

For additional information, refer to the ABF_CR0 register on page 481.

OBSOLETE

8. Internal Main Oscillator (IMO)

This chapter presents the Internal Main Oscillator (IMO) and its associated registers. The IMO produces clock signals of 24 MHz and 48 MHz. For a complete table of the IMO registers, refer to the "Summary Table of the Core Registers" on page 41. For a quick reference of all PowerPSoC registers in address order, refer to the Register Details chapter on page 361.

8.1 Architectural Description

The Internal Main Oscillator (IMO) outputs two clocks: a SYSCLK, which can be the internal 24 MHz clock or an external clock, and a SYSCLKX2 that is always twice the SYSCLK frequency. The accuracy of the internal 24/48 MHz clocks is ± 5% over temperature variation and a voltage range of 5.0V ± 0.25V. No external components are required to achieve this level of accuracy.

8.2 Application Description

8.2.1 Trimming the IMO

An 8-bit register (IMO_TR) is used to trim the IMO. Bit 0 is the LSB and bit 7 is the MSB. The trim step size is approximately 80 kHz.

A factory trim setting is loaded into the IMO_TR register at boot time for 5V ± 0.25V operation.

8.3 Register Definitions

The following registers are associated with the Internal Main Oscillator (IMO). The register descriptions have an associated register table showing the bit structure for that register. The bits in the tables that are grayed out are reserved bits and are not detailed in the register descriptions that follow. Reserved bits should always be written with a value of '0'. For a complete table showing all oscillator registers, refer to the "Summary Table of the Core Registers" on page 41.

8.3.1 CPU_SCR1 Register

Address	Name	Bit 7	Bit 6	Bit 5	Bit 4	Bit 3	Bit 2	Bit 1	Bit 0	Access
x,FEh	CPU_SCR1	IRESS							IRAMDIS	# : 00

LEGEND
x An "x" before the comma in the address field indicates that this register can be read or written to no matter what bank is used.
Access is bit specific. Refer to the Register Details chapter on page 361 for additional information.

The System Status and Control Register 1 (CPU_SCR1) is used to convey the status and control of events related to internal resets and watchdog reset.

Bit 7: IRESS

The Internal Reset Status bit is a read only bit that may be used to determine if the booting process occurred more than once.

When this bit is set, it indicates that the SROM SWBootReset code was executed more than once. If this bit is not set, the SWBootReset was executed only once. In either case, the SWBootReset code will not allow execution from code stored in Flash until the M8C Core is in a safe operating mode with respect to supply voltage and Flash operation. There is no need for concern when this bit is set. It is provided for systems which may be sensitive to boot time, so that they can determine if the normal one-pass boot time was exceeded. For more information on the SWBootReest

PROOF OF LIFE

code see the Supervisory ROM (SROM) chapter on page 53.

Bit 0: IRAMDIS. The Initialize RAM Disable bit is a control bit that is readable and writeable. The ***default value*** for this bit is '0', which indicates that the maximum amount of SRAM should be initialized on watchdog reset to a value of 00h. When the bit is '1', the minimum amount of SRAM is initialized after a watchdog reset. For more information on this bit, see the "SROM Function Descriptions" on page 54.

For additional information, refer to the CPU_SCR1 register on page 466.

8.3.2 OSC_CR2 Register

Address	Name	Bit 7	Bit 6	Bit 5	Bit 4	Bit 3	Bit 2	Bit 1	Bit 0	Access
1,E2h	OSC_CR2						EXTCLKEN	RSVD	SYSCLKX-2DIS	RW : 00

The Oscillator Control Register 2 (OSC_CR2) is used to configure various features of internal clock sources and clock nets.

Bit 2: EXTCLKEN. When the EXTCLKEN bit is set, the external clock becomes the source for the internal clock tree, SYSCLK, which drives most PowerPSoC device clocking functions. All external and internal signals, including the 32 kHz clock, whether derived from the Internal Low Speed Oscillator (ILO) or the crystal oscillator, are synchronized to this clock source. If an external clock is enabled, PLL mode should be off. The external clock input is located on port P1[4]. When using this input, the pin drive mode should be set to High Z (not High Z analog).

Bit 1: RSVD. This is a reserved bit. It should always be 0.

Bit 0: SYSCLKX2DIS. When SYSCLKX2DIS is set, the IMO's doubler is disabled. This will result in a reduction of overall device power, on the order of 1 mA. It is advised that any application that does not require this doubled clock should have it turned off.

For additional information, refer to the OSC_CR2 register on page 507.

8.3.3 IMO_TR Register

Address	Name	Bit 7	Bit 6	Bit 5	Bit 4	Bit 3	Bit 2	Bit 1	Bit 0	Access
1,E8h	IMO_TR	Trim[7:0]								RW : 00

The Internal Main Oscillator Trim Register (IMO_TR) is used to manually center the oscillator's output to a target frequency.

The PowerPSoC device specific value for 5V operation is loaded into the Internal Main Oscillator Trim register (IMO_TR) at boot time. The Internal Main Oscillator will operate within specified tolerance over a voltage range of 4.75V to 5.25V, with no modification of this register.

It is strongly recommended that the user not alter the register value.

Bits 7 to 0: Trim[7:0]. These bits are used to trim the Internal Main Oscillator. A larger value in this register will increase the speed of the oscillator.

For additional information, refer to the IMO_TR register on page 511.

OBSOLETE

9. Internal Low Speed Oscillator

This chapter briefly explains the Internal Low Speed Oscillator (ILO) and its associated register. The Internal Low Speed Oscillator produces a 32 kHz clock. For a quick reference of all PowerPSoC registers in address order, refer to the Register Details chapter on page 361.

9.1 Architectural Description

The Internal Low Speed Oscillator (ILO) is an oscillator with a nominal frequency of 32 kHz. It is used to generate Sleep Wake-up interrupts and watchdog resets. This oscillator can also be used as a clocking source for the digital PSoC blocks.

The oscillator operates in three modes: normal power, low power, and off. The Normal Power mode consumes more current to produce a more accurate frequency. The Low Power mode is always used when the part is in a power down (sleep) state.

9.2 Register Definitions

The following register is associated with the Internal Low Speed Oscillator (ILO). The register description has an associated register table showing the bit structure. The bits in the table that are grayed out are reserved bits and are not detailed in the register description that follows. Note that reserved bits should always be written with a value of '0'.

9.2.1 ILO_TR Register

Address	Name	Bit 7	Bit 6	Bit 5	Bit 4	Bit 3	Bit 2	Bit 1	Bit 0	Access
1,E9h	ILO_TR			Bias Trim[1:0]		Freq Trim[3:0]				W : 00

The Internal Low Speed Oscillator Trim Register (ILO_TR) sets the adjustment for the internal low speed oscillator.

The device specific value, placed in the trim bits of this register at boot time, is based on factory testing. ***It is strongly recommended that the user not alter the values in the register***.

Bits 5 and 4: Bias Trim[1:0]. These two bits are used to set the bias current in the PTAT Current Source. Bit 5 gets inverted, so that a medium bias is selected when both bits are '0'. The ***bias current*** is set according to Table 9-1.

Table 9-1. Bias Current in PTAT

Bias Current	Bias Trim [1:0]
Medium Bias	00b
Maximum Bias	01b
Minimum Bias	10b
Reserved	11b

Bits 3 to 0: Freq Trim[3:0]. These four bits are used to trim the frequency. Bit 0 is the LSb and bit 3 is the MSb. Bit 3 gets inverted inside the register.

For additional information, refer to the ILO_TR register on page 512.

OBSOLETE

OBSOLETE

10. Sleep and Watchdog

This chapter discusses the Sleep and Watchdog operations and their associated registers. For a complete table of the Sleep and Watchdog registers, refer to the "Summary Table of the Core Registers" on page 41. For a quick reference of all PowerPSoC registers in address order, refer to the Register Details chapter on page 361.

10.1 Architectural Description

Device components that are involved in Sleep and Watchdog operation are the selected 32 kHz clock, the sleep timer, the Sleep bit in the CPU_SCR0 register, the sleep circuit (to sequence going into and coming out of sleep), the bandgap refresh circuit (to periodically refresh the reference voltage during sleep), and the ***watchdog timer***.

The goal of Sleep operation is to reduce average power consumption as much as possible. The system has a sleep state that can be initiated under firmware control. In this state, the CPU is stopped at an instruction boundary and the 24/48 MHz oscillator (IMO), the Flash memory module, and bandgap voltage reference are powered down. The only blocks that remain in operation are the 32 kHz oscillator, ***PSoC blocks*** clocked from the 32 kHz clock selection, and the supply voltage monitor circuit.

Analog PSoC blocks and PowerPSoC Core blocks have individual power down settings that are controlled by firmware, independently of the sleep state. Continuous time analog blocks may remain in operation, since they do not require a clock source. Typically, switched capacitor analog blocks will not operate, since the internal sources of clocking for these blocks are stopped.

The system can only wake up from sleep as a result of an interrupt or reset event. The sleep timer can provide periodic interrupts to allow the system to wake up, poll peripherals, or do real-time functions, and then go to sleep again. The GPIO (pin) interrupt, supply monitor interrupt, analog column interrupts, and timers clocked externally or from the 32 kHz clock are examples of ***asynchronous*** interrupts that can also be used to wake the system up.

The Watchdog Timer (WDT) circuit is designed to assert a ***hardware reset*** to the device after a pre-programmed interval, unless it is periodically serviced in firmware. In the event that an unexpected execution path is taken through the code, this functionality serves to reboot the system. It can also restart the system from the CPU halt state.

Once the WDT is enabled, it can only be disabled by an External Reset (XRES) or a Power On Reset (POR). A WDT reset will leave the WDT enabled. Therefore, if the WDT is used in an application, all code (including initialization code) must be written as though the WDT is enabled.

10.1.1 32 kHz Clock Selection

The 32 kHz clock source is the Internal Low Speed Oscillator (ILO). The 32 kHz clock plays a key role in sleep functionality. It runs continuously and is used to sequence system wakeup. It is also used to periodically refresh the bandgap voltage during sleep.

10.1.2 Sleep Timer

The sleep timer is a 15-bit up counter clocked by the 32 kHz clock source, the ILO. This timer is always enabled. The exception to this is within an ***ICE*** (in-circuit ***emulator***) in ***debugger*** mode and when the Stop bit in the CPU_SCR0 is set; the sleep timer is disabled, so that the user will not get continual watchdog resets when a breakpoint is hit in the debugger environment.

If the associated sleep timer interrupt is enabled, a periodic interrupt to the CPU is generated based on the sleep interval selected from the OSC_CR0 register. The sleep timer functionality does not need to be directly associated with the sleep state. It can be used as a general purpose timer interrupt regardless of sleep state.

PROFILE

The reset state of the sleep timer is a count value of all zeros. There are two ways to reset the sleep timer. Any hardware reset, (that is, POR, XRES, or Watchdog Reset (WDR) will reset the sleep timer. There is also a method that allows the user to reset the sleep timer in firmware. A write of 38h to the RES_WDT register clears the sleep timer.

Note Any write to the RES_WDT register also clears the watchdog timer.

Clearing the sleep timer may be done at anytime to synchronize the sleep timer operation to CPU processing. A good example of this is after POR. The CPU hold-off, due to voltage ramp and others, may be significant. In addition, a significant amount of program initialization may be required. However, the sleep timer starts counting immediately after POR and will be at an arbitrary count when user code begins execution. In this case, it may be desirable to clear the sleep timer before enabling the sleep interrupt initially, to ensure that the first sleep period is a full interval.

10.2 Application Description

The following are notes regarding sleep as it relates to firmware and application issues.

Note 1 If an interrupt is pending, enabled, and scheduled to be taken at the instruction boundary after the write to the sleep bit, the system will not go to sleep. The instruction will still execute, but it will not be able to set the SLEEP bit in the CPU_SCR0 register. Instead, the interrupt will be taken and the effect of the sleep instruction is ignored.

Note 2 The Global Interrupt Enable (CPU_F register) does not need to be enabled to wake the system out of sleep state. Individual interrupt enables, as set in the interrupt mask registers, are sufficient. If the Global Interrupt Enable is not set, the CPU will not service the ISR associated with that interrupt. However, the system will wake up and continue executing instructions from the point at which it went to sleep. In this case, the user must manually clear the pending interrupt or subsequently enable the Global Interrupt Enable bit and let the CPU take the ISR. If a pending interrupt is not cleared, it will be continuously asserted. Although the sleep bit may be written and the sleep sequence executed as soon as the device enters Sleep mode, the Sleep bit is cleared by the pending interrupt and Sleep mode is exited immediately.

Note 3 On wake up, the instruction immediately after the sleep instruction is executed before the interrupt service routine (if enabled). The instruction after the sleep instruction is pre-fetched, before the system actually goes to sleep. Therefore, when an interrupt occurs to wake the system up, the pre-fetched instruction is executed and then the interrupt service routine is executed. (If the Global Interrupt Enable is not set, instruction execution will just continue where it left off before sleep.)

Note 4 Analog power must be turned off by firmware before going to sleep, to achieve the smallest sleep current. The system sleep state does not control the analog array. There are individual power controls for each analog block and global power controls in the reference block. These power controls must be manipulated by firmware.

Note 5 If the Global Interrupt Enable bit is disabled, it can be safely enabled just before the instruction that writes the sleep bit. It is usually undesirable to get an interrupt on the instruction boundary, just before writing the sleep bit. This means that on the return from interrupt, the sleep command will be executed, possibly bypassing any firmware preparations that must be made in order to go to sleep. To prevent this, disable interrupts before preparations are made. After sleep preparations, enable global interrupts and write the sleep bit with the two consecutive instructions as follows.

```
and f,~01h          // disable global interrupts
                    // (prepare for sleep, could
                    // be many instructions)
or f,01h            // enable global interrupts
mov reg[ffh],08h    // Set the sleep bit
```

Due to the timing of the Global Interrupt Enable instruction, it is not possible for an interrupt to occur immediately after that instruction. The earliest the interrupt could occur is after the next instruction (write to the Sleep bit) has been executed. Therefore, if an interrupt is pending, the sleep instruction is executed; but as described in Note 1, the sleep instruction will be ignored. The first instruction executed after the ISR is the instruction after sleep.

PRELIMINARY

10.3 Register Definitions

The following registers are associated with Sleep and Watchdog and are listed in address order. Each register description has an associated register table showing the bit structure for that register. The bits that are grayed out in the tables below are reserved bits and are not detailed in the register descriptions. Note that reserved bits should always be written with a value of '0'. For a complete table of the Sleep and Watchdog registers, refer to the "Summary Table of the Core Registers" on page 41.

10.3.1 INT_MSK0 Register

Address	Name	Bit 7	Bit 6	Bit 5	Bit 4	Bit 3	Bit 2	Bit 1	Bit 0	Access
0,E0h	INT_MSK0	VC3	Sleep	GPIO	UVLO		Analog 1	Analog 0	V Monitor	RW : 00

The Interrupt Mask Register 0 (INT_MSK0) is used to enable the individual sources' ability to create pending interrupts.

Depending on your PowerPSoC device's characteristics, only certain bits are accessible to be read or written in the analog column dependent INT_MSK0 register. In the table above, the analog column numbers are listed to the right in the Address column.

Bits 7 and 5 to 0. The INT_MSK0 register holds bits that are used by several different resources. For a full discussion of the INT_MSK0 register, see the Interrupt Controller chapter on page 71.

Bit 6: Sleep. This bit controls the sleep interrupt enable.

For additional information, refer to the INT_MSK0 register on page 454.

10.3.2 RES_WDT Register

Address	Name	Bit 7	Bit 6	Bit 5	Bit 4	Bit 3	Bit 2	Bit 1	Bit 0	Access
0,E3h	RES_WDT	WDSL_Clear[7:0]								W : 00

The Reset Watchdog Timer Register (RES_WDT) is used to clear the watchdog timer (a write of any value) and clear both the watchdog timer and the sleep timer (a write of 38h).

Bits 7 to 0: WDSL_Clear[7:0]. The Watchdog Timer (WDT) write-only register is designed to timeout at three rollover events of the sleep timer. Therefore, if only the WDT is cleared, the next Watchdog Reset (WDR) will occur anywhere from two to three times the current sleep interval setting. If the sleep timer is near the beginning of its count, the watchdog timeout will be closer to three times. However, if the sleep timer is very close to its ***terminal count***, the watchdog timeout will be closer to two times. To ensure a full three times timeout, both the WDT and the sleep timer may be cleared. In applications that need a real-time clock, and thus cannot reset the sleep timer when clearing the WDT, the duty cycle at which the WDT must be cleared should be no greater than two times the sleep interval.

For additional information, refer to the RES_WDT register on page 457.

OBSOLETE

10.3.3 CPU_SCR1 Register

Address	Name	Bit 7	Bit 6	Bit 5	Bit 4	Bit 3	Bit 2	Bit 1	Bit 0	Access
x,FEh	CPU_SCR1	IRESS							IRAMDIS	# : 00

LEGEND
x An "x" before the comma in the address field indicates that this register can be read or written to no matter what bank is used.
Access is bit specific. Refer to the Register Details chapter on page 361 for additional information.

The System Status and Control Register 1 (CPU_SCR1) is used to convey the status and control of events related to internal resets and watchdog reset.

Bit 7: IRESS. The Internal Reset Status bit is a read only bit that may be used to determine if the booting process occurred more than once.

When this bit is set, it indicates that the SROM SWBootReset code was executed more than once. If this bit is not set, the SWBootReset was executed only once. In either case, the SWBootReset code will not allow execution from code stored in Flash until the M8C Core is in a safe operating mode with respect to supply voltage and Flash operation. There is no need for concern when this bit is set. It is provided for systems which may be sensitive to boot time, so that they can determine if the normal one-pass boot time was exceeded. For more information on the SWBootReest code see the Supervisory ROM (SROM) chapter on page 53.

Bit 0: IRAMDIS. The Initialize RAM Disable bit is a control bit that is readable and writeable. The ***default value*** for this bit is '0', which indicates that the maximum amount of SRAM should be initialized on watchdog reset to a value of 00h. When the bit is '1', the minimum amount of SRAM is initialized after a watchdog reset. For more information on this bit, see the "SROM Function Descriptions" on page 54.

For additional information, refer to the CPU_SCR1 register on page 466.

OBSOLETE

10.3.4 CPU_SCR0 Register

Address	Name	Bit 7	Bit 6	Bit 5	Bit 4	Bit 3	Bit 2	Bit 1	Bit 0	Access
x,FFh	CPU_SCR0	GIES		WDRS	PORS	Sleep			STOP	# : XX

LEGEND
X The value for power on reset is unknown.
x An “x” before the comma in the address field indicates that this register can be read or written to no matter what bank is used.
Access is bit specific. Refer to register detail for additional information.

The System Status and Control Register 0 (CPU_SCR0) is used to convey the status and control of events for various functions of a PowerPSoC device.

Bit 7: GIES. The Global Interrupt Enable Status bit is a read only status bit and its use is discouraged. The GIES bit is a legacy bit which was used to provide the ability to read the GIE bit of the CPU_F register. However, the CPU_F register is now readable. When this bit is set, it indicates that the GIE bit in the CPU_F register is also set which, in turn, indicates that the microprocessor will service interrupts.

Bit 5: WDRS. The WatchDog Reset Status bit may not be set. It is normally ‘0’ and automatically set whenever a watchdog reset occurs. The bit is readable and clearable by writing a zero to its bit position in the CPU_SCR0 register.

Bit 4: PORS. The Power On Reset Status (PORS) bit, which is the watchdog enable bit, is set automatically by a POR or External Reset (XRES). If the bit is cleared by user code, the watchdog timer is enabled. Once cleared, the only way to reset the PORS bit is to go through a POR or XRES. Thus, there is no way to disable the watchdog timer, other than to go through a POR or XRES.

Bit 3: Sleep. The Sleep bit is used to enter Low Power Sleep mode when set. To wake up the system, this register bit is cleared asynchronously by any enabled interrupt. There are two special features of this register bit that ensures proper Sleep operation. First, the write to set the register bit is blocked, if an interrupt is about to be taken on that instruction boundary (immediately after the write). Second, there is a hardware interlock to ensure that, once set, the sleep bit may not be cleared by an incoming interrupt until the sleep circuit has finished performing the sleep sequence and the system-wide power down signal has been asserted. This prevents the sleep circuit from being interrupted in the middle of the process of system power down, possibly leaving the system in an indeterminate state.

Bit 0: STOP. The STOP bit is readable and writeable. When set, the PowerPSoC M8C will stop executing code until a reset event occurs. This can be either a POR, WDR, or XRES. If an application wants to stop code execution until a reset, the preferred method would be to use the HALT instruction rather than a register write to this bit.

For additional information, refer to the CPU_SCR0 register on page 467.

OBSOLETE

10.3.5 OSC_CR0 Register

Address	Name	Bit 7	Bit 6	Bit 5	Bit 4	Bit 3	Bit 2	Bit 1	Bit 0	Access
1,E0h	OSC_CR0			No Buzz	Sleep[1:0]		CPU Speed[2:0]			RW : 00

The Oscillator Control Register 0 (OSC_CR0) is used to configure various features of internal clock sources and clock nets.

Bit 5: No Buzz. Normally, when the Sleep bit is set in the CPU_SCR register, all PowerPSoC device systems are powered down, including the bandgap reference. However, to facilitate the detection of ***POR*** and ***LVD*** events at a rate higher than the sleep interval, the bandgap circuit is powered up periodically for about 60 µs at the Sleep System Duty Cycle, which is independent of the sleep interval and typically higher. When the No Buzz bit is set, the Sleep System Duty Cycle value is overridden and the bandgap circuit is forced to be on during sleep. This results in a faster response to an LVD or POR event (continuous detection as opposed to periodic detection), at the expense of slightly higher average sleep current.

Bits 4 and 3: Sleep[1:0]. The available sleep interval selections are shown in Table 10-1. The accuracy of the sleep intervals are dependent on the accuracy of the oscillator used.

Table 10-1. Sleep Interval Selections

Sleep Interval OSC_CR[4:3]	Sleep Timer Clocks	Sleep Period (nominal)	Watchdog Period (nominal)
00b (default)	64	1.95 ms	6 ms
01b	512	15.6 ms	47 ms
10b	4,096	125 ms	375 ms
11b	32,768	1 sec	3 sec

Bits 2 to 0: CPU Speed[2:0]. The PowerPSoC M8C may operate over a range of CPU clock speeds (see Table 10-2), allowing the M8C's performance and power requirements to be tailored to the application.

The reset value for the CPU Speed bits is zero; therefore, the default CPU speed is one-eighth of the clock source. The Internal Main Oscillator (IMO) is the default clock source for the CPU speed circuit; therefore, the default CPU speed is 3 MHz.

The CPU frequency is changed with a write to the OSC_CR0 register. There are eight frequencies generated from a power-of-2 divide circuit, which are selected by a 3-bit code. At any given time, the CPU 8-to-1 clock mux is selecting one of the available frequencies, which is resynchronized to the 24 MHz master clock at the output.

Regardless of the CPU Speed bit's setting, if the actual CPU speed is greater than 12 MHz, the 24 MHz operating requirements apply. An example of this scenario is a device that is configured to use an external clock, which is supplying a frequency of 20 MHz. If the CPU speed register's value is 011b, the CPU clock will be 20 MHz. Therefore, the supply voltage requirements for the device are the same as if the part was operating at 24 MHz off of the IMO. The operating voltage requirements are not relaxed until the CPU speed is at 12 MHz or less.

Table 10-2. OSC_CR0[2:0] Bits: CPU Speed

Bits	Internal Main Oscillator	External Clock
000b	3 MHz	EXTCLK/ 8
001b	6 MHz	EXTCLK/ 4
010b	12 MHz	EXTCLK/ 2
011b	24 MHz	EXTCLK/ 1
100b	1.5 MHz	EXTCLK/ 16
101b	750 kHz	EXTCLK/ 32
110b	187.5 kHz	EXTCLK/ 128
111b	93.7 kHz	EXTCLK/ 256

For additional information, refer to the OSC_CR0 register on page 505.

Preliminary

10.3.6 ILO_TR Register

Address	Name	Bit 7	Bit 6	Bit 5	Bit 4	Bit 3	Bit 2	Bit 1	Bit 0	Access
1,E9h	ILO_TR			Bias Trim[1:0]		Freq Trim[3:0]				W : 00

The Internal Low Speed Oscillator Trim Register (ILO_TR) sets the adjustment for the internal low speed oscillator.

The device specific value, placed in the trim bits of this register at boot time, is based on factory testing. ***It is strongly recommended that the user not alter the register value***.

Bits 5 and 4: Bias Trim[1:0]. These two bits are used to set the bias current in the PTAT Current Source. Bit 5 gets inverted, so that a medium bias is selected when both bits are '0'. The bias current is set according to Table 10-3.

Table 10-3. Bias Current in PTAT

Bias Current	Bias Trim [1:0]
Medium Bias	00b
Maximum Bias	01b
Minimum Bias	10b
Not needed *	11b

* About 15% higher than the minimum bias.

Bits 3 to 0: Freq Trim[3:0]. These four bits are used to trim the frequency. Bit 0 is the LSb and bit 3 is the MSb. Bit 3 gets inverted inside the register.

For additional information, refer to the ILO_TR register on page 512.

OBSOLETE

10.4 Timing Diagrams

10.4.1 Sleep Sequence

The Sleep bit, in the CPU_SCR0 register, is an input into the sleep logic circuit. This circuit is designed to sequence the device into and out of the hardware sleep state. The hardware sequence to put the device to sleep is shown in Figure 10-1 and is defined as follows.

1. Firmware sets the SLEEP bit in the CPU_SCR0 register. The Bus Request (BRQ) signal to the CPU is immediately asserted: This is a request by the system to halt CPU operation at an instruction boundary.
2. The CPU issues a Bus Request Acknowledge (BRA) on the following ***positive edge*** of the CPU clock.
3. The sleep logic waits for the following ***negative edge*** of the CPU clock and then asserts a system-wide Power Down (PD) signal. In Figure 10-1, the CPU is halted and the system-wide power down signal is asserted.

The system-wide PD signal controls three major circuit blocks: the Flash memory module, the Internal Main Oscillator (24/48 MHz oscillator that is also called the IMO), and the bandgap voltage reference. These circuits transition into a zero power state. The only operational circuits on the PowerPSoC device are the ILO, the bandgap refresh circuit, and the supply voltage monitor circuit. Note that the system sleep state does not apply to the analog array. Power down settings for individual analog blocks and references must be done in firmware, prior to executing the sleep instruction.

Figure 10-1. Sleep Sequence

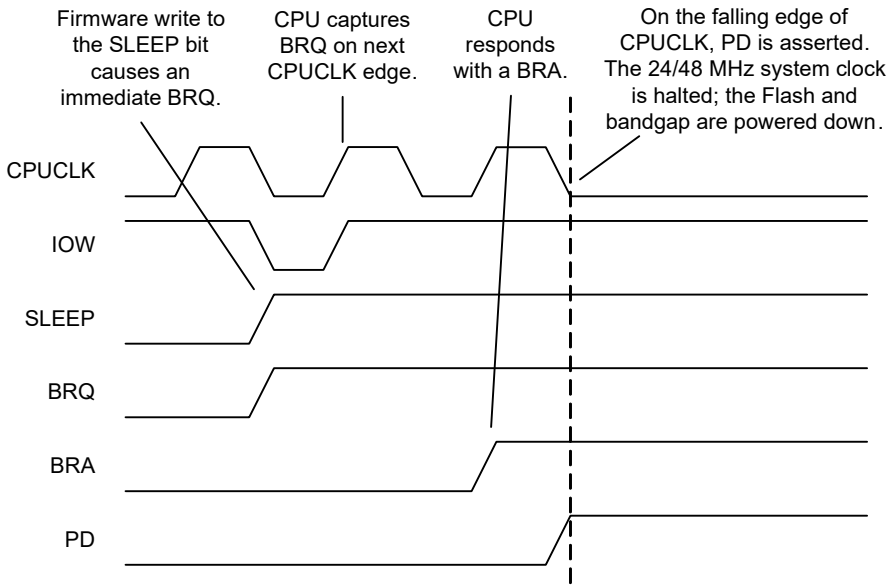

10.4.2 Wake Up Sequence

Once asleep, the only event that can wake the system up is an interrupt. The Global Interrupt Enable of the CPU flag register does not need to be set. Any unmasked interrupt will wake the system up. It is optional for the CPU to actually take the interrupt after the wakeup sequence.

The wake up sequence is synchronized to the 32 kHz clock for purposes of sequencing a startup delay, to allow the Flash memory module enough time to power up before the CPU asserts the first read access. Another reason for the delay is to allow the IMO, bandgap, and LVD/POR circuits time to settle before actually being used in the system. As shown in Figure 10-2, the wake up sequence is as follows.

1. The wake up interrupt occurs and is synchronized by the negative edge of the 32 kHz clock.
2. At the following positive edge of the 32 kHz clock, the system-wide PD signal is negated. The Flash memory module, IMO, and bandgap any POR/LVD circuits are all powered up to a normal operating state.
3. At the next positive edge of the 32 kHz clock, the values of the bandgap are settled and sampled.
4. At the following negative edge of the 32 kHz clock (after about 15 µs, nominal). The values of the POR/LVD signals have settled and are sampled. The BRQ signal is negated by the sleep logic circuit. On the following CPU clock, BRA is negated by the CPU and instruction execution resumes.

The wake up times (interrupt to CPU operational) will range from two to three 32 kHz cycles or 61 - 92 µs (nominal).

Figure 10-2. Wakeup Sequence

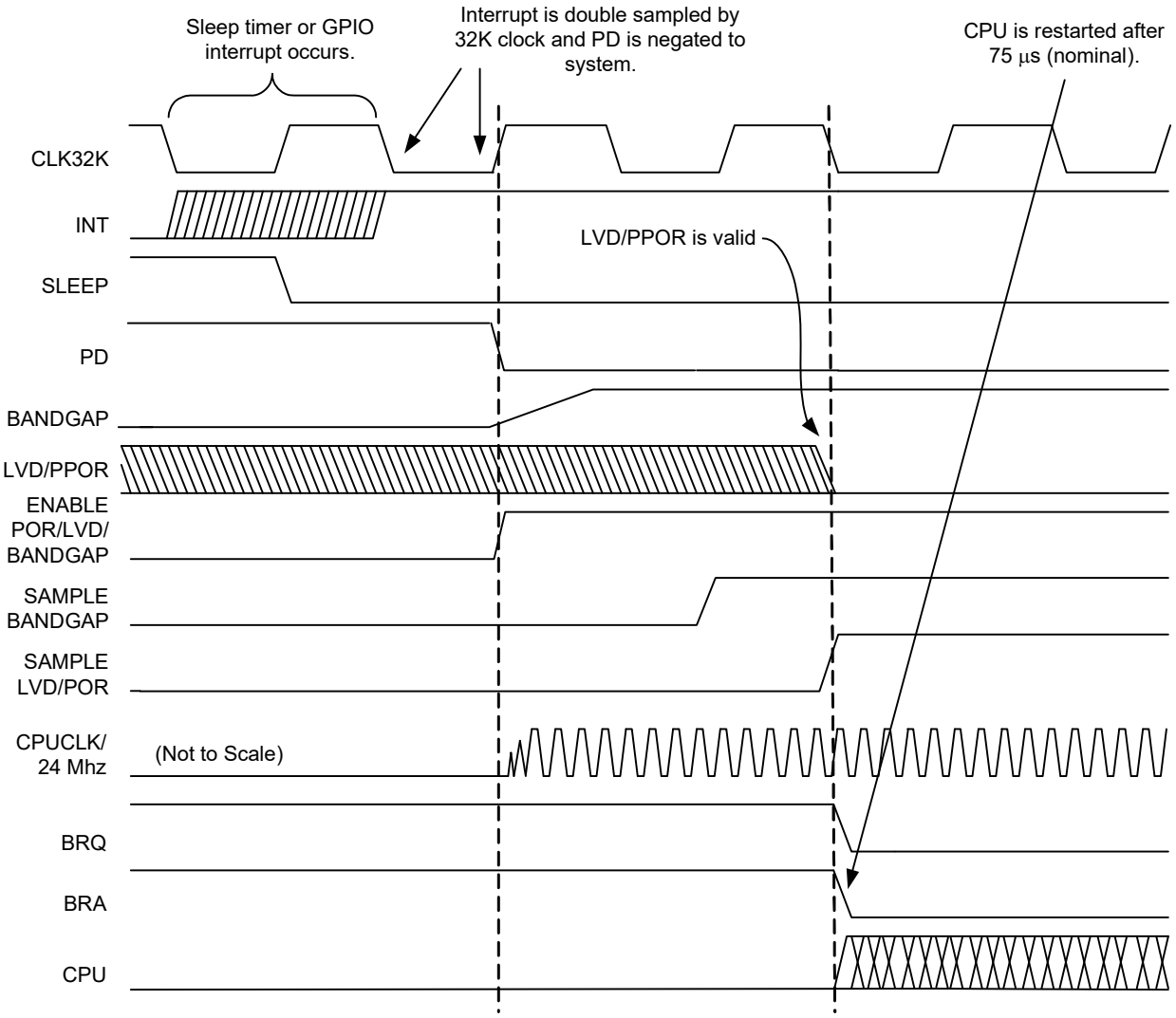

10.4.3 Bandgap Refresh

During normal operation, the bandgap circuit provides a voltage reference (VRef) to the system, for use in the analog blocks, Flash, and ***low voltage detect (LVD)*** circuitry. Normally, the bandgap output is connected directly to the VRef signal. However, during sleep, the ***bandgap reference*** generator block and LVD circuits are completely powered down. The bandgap and LVD blocks are periodically re-enabled during sleep, in order to monitor for low voltage conditions. This is accomplished by turning on the bandgap periodically, allowing it time to start up for a full 32 kHz clock period, and connecting it to VRef to refresh the reference voltage for the following 32 kHz clock period as shown in Figure 10-3.

During the second 32 kHz clock period of the refresh cycle, the LVD circuit is allowed to settle during the ***high time*** of the 32 kHz clock. During the low period of the second 32 kHz clock, the LVD interrupt is allowed to occur.

Figure 10-3. Bandgap Refresh Operation

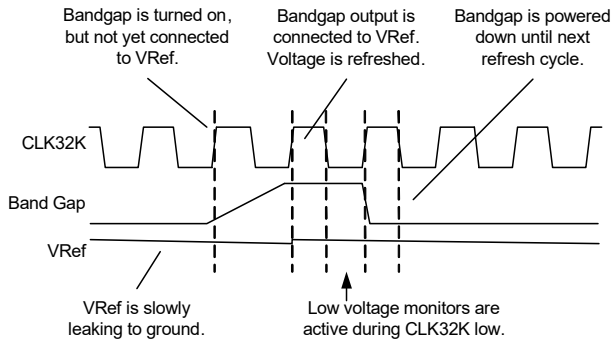

The rate at which the refresh occurs is related to the 32 kHz clock and controlled by the Power System Sleep Duty Cycle (PSSDC). Table 10-4 enumerates the available selections. The default setting (256 sleep timer counts) is applicable for many applications, giving a typical average device current under 5 µA.

Table 10-4. Power System Sleep Duty Cycle Selections

PSSDC	Sleep Timer Counts	Period (Nominal)
00b (default)	256	8 ms
01b	1024	31.2 ms
10b	64	2 ms
11b	16	500 µs

10.4.4 Watchdog Timer

On device boot up, the Watchdog Timer (WDT) is initially disabled. The PORS bit in the system control register controls the enabling of the WDT. On boot, the PORS bit is initially set to '1', indicating that either a POR or XRES event has occurred. The WDT is enabled by clearing the PORS bit. Once this bit is cleared and the watchdog timer is enabled, it cannot be subsequently disabled. (The PORS bit cannot be set to '1' in firmware; it can only be cleared.)

The only way to disable the Watchdog function, after it is enabled, is through a subsequent POR or XRES. Although the WDT is disabled during the first time through initialization code after a POR or XRES, all code should be written as if it is enabled (that is, the WDT should be cleared periodically). This is because, in the initialization code after a WDR event, the watchdog timer is enabled so all code must be aware of this.

The watchdog timer is three counts of the sleep timer interrupt output. The watchdog interval is three times the selected sleep timer interval. The available selections for the watchdog interval are shown in Table 10-1. When the sleep timer interrupt is asserted, the watchdog timer increments. When the counter reaches three, a terminal count is asserted. This terminal count is registered by the 32 kHz clock. Therefore, the WDR (Watchdog Reset) signal will go high after the following edge of the 32 kHz clock and be held asserted for one cycle (30 µs nominal). The ***flip-flop*** that registers the WDT terminal count is not reset by the WDR signal when it is asserted, but is reset by all other resets. This timing is shown in Figure 10-4.

Figure 10-4. Watchdog Reset

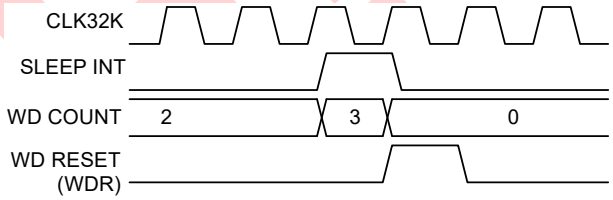

Once enabled, the WDT must be periodically cleared in firmware. This is accomplished with a write to the RES_WDT register. This write is data independent, so any write will clear the watchdog timer. (Note that a write of 38h will also clear the sleep timer.) If for any reason the firmware fails to clear the WDT within the selected interval, the circuit will assert WDR to the device. WDR is equivalent in effect to any other reset. All internal registers are set to their reset state, see the table titled "Details of Functionality for Various Resets" on page 262. An important aspect to remember about WDT resets is that RAM initialization can be disabled (IRAMDIS in the CPU_SCR1 register). In this case, the SRAM contents are unaffected; so that when a WDR occurs, program variables are persistent through this reset.

In practical application, it is important to know that the watchdog timer interval can be anywhere between two and three times the sleep timer interval. The only way to guarantee that the WDT interval is a full three times that of the sleep interval is to clear the sleep timer (write 38h) when clearing the WDT register. However, this is not possible in applications that use the sleep timer as a real-time clock. In the case where firmware clears the WDT register without clearing the sleep timer, this can occur at any point in a given sleep timer interval. If it occurs just before the terminal count of a sleep timer interval, the resulting WDT interval will be just over two times that of the sleep timer interval.

10.5 Power Consumption

Sleep mode power consumption consists of the items in the following tables.

In Table 10-5, the typical block currents shown do not represent maximums. These currents do not include any analog block currents that may be on during Sleep mode.

Table 10-5. Continuous Currents

IPOR	1 µA
ICLK32K (ILO)	1 µA

While the CLK32K can be turned off in Sleep mode, this mode is not useful since it makes it impossible to restart unless an imprecise power on reset (IPOR) occurs. (The Sleep bit can not be cleared without CLK32K.) During the sleep mode buzz, the bandgap is on for two cycles and the LVD circuitry is on for one cycle. Time-averaged currents from periodic sleep mode ‘buzz’, with periodic count of N, are listed in Table 10-6.

Table 10-6. Time-Averaged Currents

IBG (Bandgap)	(2/N) * 60 µA
ILVD (LVD comparators)	(2/N) * 50 µA

Table 10-7 lists example currents for N=256 and N=1024. Device leakage currents add to the totals in the table.

Table 10-7. Example Currents

	N=256	N=1024
IPOR	1	1
CLK32K	1	1
IBG	0.46	0.12
ILVD	0.4	0.1
Total	2.9 µA	2.2 µA

OBSOLETE

OBSOLETE

Section C: Digital System

The configurable Digital System section discusses the digital components of the CY8CLED0xx0x PowerPSoC devices and the registers associated with those components. This section encompasses the following chapters:

- Global Digital Interconnect (GDI) on page 109
- Array Digital Interconnect (ADI) on page 113
- Row Digital Interconnect (RDI) on page 115
- Digital Blocks on page 123

Top Level Digital Architecture

The figure below displays the top level architecture of the PowerPSoC device's digital system. Each component of the figure is discussed at length in this section.

PowerPSoC Digital System Block Diagram

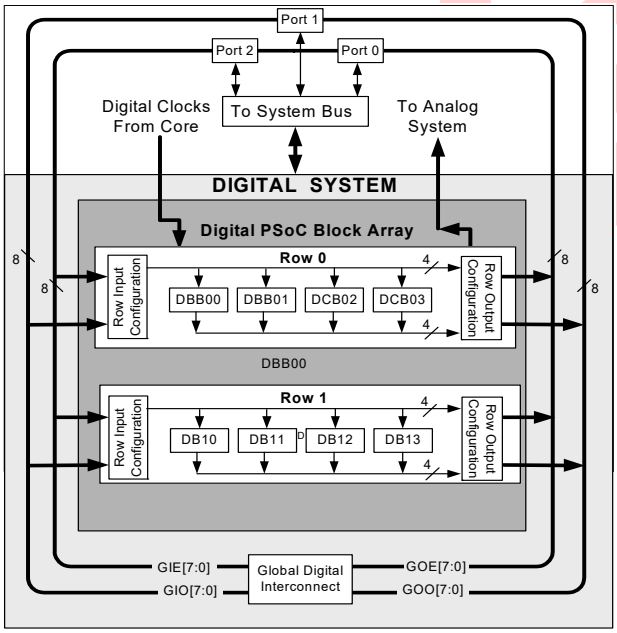

Interpreting the Digital Documentation

Information in this section covers the CY8CLED0xx0x PowerPSoC devices. The following table lists the resources available for the CY8CLED0xx0x PSoC devices. While reading the digital system section, keep in mind the number of digital rows that are in the CY8CLED0xx0x is 2.

PowerPSoC Device Characteristics

PSoC Part Number	Digital I/O (max)	Digital Rows	Digital Blocks	Analog Inputs	Analog Outputs	Analog Columns	Analog Blocks
CY8CLED0xx0x	**14**	**2**	**8**	14	2	2	6

Obsolete

Digital Register Summary

The table below lists all the PowerPSoC registers for the digital system in address order (Add. column) within their system resource configuration. The bits that are grayed out are reserved bits. If these bits are written, they should always be written with a value of '0'. The naming conventions for the digital row registers and the digital block registers are detailed in their respective table title rows.

Note that the CY8CLED0xx0x is a 2 row device.

Summary Table of the Digital Registers

Add.	Name	Bit 7	Bit 6	Bit 5	Bit 4	Bit 3	Bit 2	Bit 1	Bit 0	Access
GLOBAL DIGITAL INTERCONNECT (GDI) REGISTERS (page 111)										
1,D0h	GDI_O_IN	GIONOUT7	GIONOUT6	GIONOUT5	GIONOUT4	GIONOUT3	GIONOUT2	GIONOUT1	GIONOUT0	RW : 00
1,D1h	GDI_E_IN	GIENOUT7	GIENOUT6	GIENOUT5	GIENOUT4	GIENOUT3	GIENOUT2	GIENOUT1	GIENOUT0	RW : 00
1,D2h	GDI_O_OU	GOOUTIN7	GOOUTIN6	GOOUTIN5	GOOUTIN4	GOOUTIN3	GOOUTIN2	GOOUTIN1	GOOUTIN0	RW : 00
1,D3h	GDI_E_OU	GOEUTIN7	GOEUTIN6	GOEUTIN5	GOEUTIN4	GOEUTIN3	GOEUTIN2	GOEUTIN1	GOEUTIN0	RW : 00
DIGITAL ROW REGISTERS (page 117)										
x,B0h	RDI0RI	RI3[1:0]		RI2[1:0]		RI1[1:0]		RI0[1:0]		RW : 00
x,B1h	RDI0SYN					RI3SYN	RI2SYN	RI1SYN	RI0SYN	RW : 0
x,B2h	RDI0IS			BCSEL[1:0]		IS3	IS2	IS1	IS0	RW : 00
x,B3h	RDI0LT0	LUT1[3:0]				LUT0[3:0]				RW : 00
x,B4h	RDI0LT1	LUT3[3:0]				LUT2[3:0]				RW : 00
x,B5h	RDI0RO0	GOO5EN	GOO1EN	GOE5EN	GOE1EN	GOO4EN	GOO0EN	GOE4EN	GOE0EN	RW : 00
x,B6h	RDI0RO1	GOO7EN	GOO3EN	GOE7EN	GOE3EN	GOO6EN	GOO2EN	GOE6EN	GOE2EN	RW : 00
x,B8h	RDI1RI	RI3[1:0]		RI2[1:0]		RI1[1:0]		RI0[1:0]		RW : 00
x,B9h	RDI1SYN					RI3SYN	RI2SYN	RI1SYN	RI0SYN	RW : 0
x,BAh	RDI1IS			BCSEL[1:0]		IS3	IS2	IS1	IS0	RW : 00
x,BBh	RDI1LT0	LUT1[3:0]				LUT0[3:0]				RW : 00
x,BCh	RDI1LT1	LUT3[3:0]				LUT2[3:0]				RW : 00
x,BDh	RDI1RO0	GOO5EN	GOO1EN	GOE5EN	GOE1EN	GOO4EN	GOO0EN	GOE4EN	GOE0EN	RW : 00
x,BEh	RDI1RO1	GOO7EN	GOO3EN	GOE7EN	GOE3EN	GOO6EN	GOO2EN	GOE6EN	GOE2EN	RW : 00

OBSOLETE

Summary Table of the Digital Registers *(continued)*

Add.	Name	Bit 7	Bit 6	Bit 5	Bit 4	Bit 3	Bit 2	Bit 1	Bit 0	Access
DIGITAL BLOCK REGISTERS (page 133)										
Digital Block Data and Control Registers (page 133)										
0,20h	DBB00DR0	Data[7:0]								# : 00
0,21h	DBB00DR1	Data[7:0]								W : 00
0,22h	DBB00DR2	Data[7:0]								# : 00
0,23h	DBB00CR0	Function control/status bits for selected function[6:0]							Enable	# : 00
1,20h	DBB00FN	Data Invert	BCEN	End Single	Mode[1:0]		Function[2:0]			RW : 00
1,21h	DBB00IN	Data Input[3:0]				Clock Input[3:0]				RW : 00
1,22h	DBB00OU	AUXCLK		AUXEN	AUX IO Select[1:0]		OUTEN	Output Select[1:0]		RW : 00
0,24h	DBB01DR0	Data[7:0]								# : 00
0,25h	DBB01DR1	Data[7:0]								W : 00
0,26h	DBB01DR2	Data[7:0]								# : 00
0,27h	DBB01CR0	Function control/status bits for selected function[6:0]							Enable	# : 00
1,24h	DBB01FN	Data Invert	BCEN	End Single	Mode[1:0]		Function[2:0]			RW : 00
1,25h	DBB01IN	Data Input[3:0]				Clock Input[3:0]				RW : 00
1,26h	DBB01OU	AUXCLK		AUXEN	AUX IO Select[1:0]		OUTEN	Output Select[1:0]		RW : 00
0,28h	DCB02DR0	Data[7:0]								# : 00
0,29h	DCB02DR1	Data[7:0]								W : 00
0,2Ah	DCB02DR2	Data[7:0]								# : 00
0,2Bh	DCB02CR0	Function control/status bits for selected function[6:0]							Enable	# : 00
1,28h	DCB02FN	Data Invert	BCEN	End Single	Mode[1:0]		Function[2:0]			RW : 00
1,29h	DCB02IN	Data Input[3:0]				Clock Input[3:0]				RW : 00
1,2Ah	DCB02OU	AUXCLK		AUXEN	AUX IO Select[1:0]		OUTEN	Output Select[1:0]		RW : 00
0,2Ch	DCB03DR0	Data[7:0]								# : 00
0,2Dh	DCB03DR1	Data[7:0]								W : 00
0,2Eh	DCB03DR2	Data[7:0]								# : 00
0,2Fh	DCB03CR0	Function control/status bits for selected function[6:0]							Enable	# : 00
1,2Ch	DCB03FN	Data Invert	BCEN	End Single	Mode[1:0]		Function[2:0]			RW : 00
1,2Dh	DCB03IN	Data Input[3:0]				Clock Input[3:0]				RW : 00
1,2Eh	DCB03OU	AUXCLK		AUXEN	AUX IO Select[1:0]		OUTEN	Output Select[1:0]		RW : 00
0,30h	DBB10DR0	Data[7:0]								# : 00
0,31h	DBB10DR1	Data[7:0]								W : 00
0,32h	DBB10DR2	Data[7:0]								# : 00
0,33h	DBB10CR0	Function control/status bits for selected function[7:1]							Enable	# : 00
1,30h	DBB10FN	Data Invert	BCEN	End Single	Mode[1:0]		Function[2:0]			RW : 00
1,31h	DBB10IN	Data Input[3:0]				Clock Input[3:0]				RW : 00
1,32h	DBB10OU	AUXCLK		AUXEN	AUX IO Select[1:0]		OUTEN	Output Select[1:0]		RW : 00
0,34h	DBB11DR0	Data[7:0]								# : 00
0,35h	DBB11DR1	Data[7:0]								W : 00
0,36h	DBB11DR2	Data[7:0]								# : 00
0,37h	DBB11CR0	Function control/status bits for selected function[7:1]							Enable	# : 00
1,34h	DBB11FN	Data Invert	BCEN	End Single	Mode[1:0]		Function[2:0]			RW : 00
1,35h	DBB11IN	Data Input[3:0]				Clock Input[3:0]				RW : 00
1,36h	DBB11OU	AUXCLK		AUXEN	AUX IO Select[1:0]		OUTEN	Output Select[1:0]		RW : 00
0,38h	DCB12DR0	Data[7:0]								# : 00
0,39h	DCB12DR1	Data[7:0]								W : 00
0,3Ah	DCB12DR2	Data[7:0]								# : 00
0,3Bh	DCB12CR0	Function control/status bits for selected function[7:1]							Enable	# : 00
1,38h	DCB12FN	Data Invert	BCEN	End Single	Mode[1:0]		Function[2:0]			RW : 00
1,39h	DCB12IN	Data Input[3:0]				Clock Input[3:0]				RW : 00
1,3Ah	DCB12OU	AUXCLK		AUXEN	AUX IO Select[1:0]		OUTEN	Output Select[1:0]		RW : 00

PRELIMINARY

Summary Table of the Digital Registers *(continued)*

Add.	Name	Bit 7	Bit 6	Bit 5	Bit 4	Bit 3	Bit 2	Bit 1	Bit 0	Access
0,3Ch	DCB13DR0	Data[7:0]								# : 00
0,3Dh	DCB13DR1	Data[7:0]								W : 00
0,3Eh	DCB13DR2	Data[7:0]								# : 00
0,3Fh	DCB13CR0	Function control/status bits for selected function[7:1]							Enable	# : 00
1,3Ch	DCB13FN	Data Invert	BCEN	End Single	Mode[1:0]		Function[2:0]			RW : 00
1,3Dh	DCB13IN	Data Input[3:0]				Clock Input[3:0]				RW : 00
1,3Eh	DCB13OU	AUXCLK		AUXEN	AUX IO Select[1:0]		OUTEN	Output Select[1:0]		RW : 00
Digital Block Interrupt Mask Register (page 139)										
0,E1h	INT_MSK1	DCB13	DCB12	DBB11	DBB10	DCB03	DCB02	DBB01	DBB00	RW : 00

LEGEND
x An 'x' before the comma in the address field indicates that this register can be read or written to no matter what bank is used. R: Read register or bit(s).
Access is bit specific. Refer to the Register Details chapter on page 361 for additional information.
R Read register or bit(s).
W Write register or bit(s).

OBSOLETE

11. Global Digital Interconnect (GDI)

This chapter discusses the Global Digital Interconnect (GDI) and its associated registers. All CY8CLED0xx0x PowerPSoC devices have the exact same global digital interconnect options. For a complete table of the GDI registers, refer to the "Summary Table of the Digital Registers" on page 106. For a quick reference of all PowerPSoC registers in address order, refer to the Register Details chapter on page 361.

11.1 Architectural Description

Global Digital Interconnect (GDI) consists of four 8-bit buses (refer to the figures that follow). Two of the buses are input buses, which allow signals to pass from the device pins to the core of the PowerPSoC device. These buses are called Global Input Odd (GIO[7:0]) and Global Input Even (GIE[7:0]). The other two buses are output buses that allow signals to pass from the core of the PowerPSoC device to the device pins. They are called Global Output Odd (GOO[7:0]) and Global Output Even (GOE[7:0]). The word "odd" or "even" in the bus name indicates which device ports the bus connects to. Busses with odd in their name connect to all odd numbered ports. Busses with even in their name connect to all even numbered ports.

There are two ends to the global digital interconnect core signals and port pins. An end may be configured as a source or a destination. For example, a GPIO pin may be configured to drive a global input or receive a global output and drive it to the package pin. Globals cannot "loop through" a GPIO. Currently, there are two types of core signals connected to the global buses. The digital blocks, which may be a source or a destination for a global ***net***, and system clocks, which may only drive global nets.

Many of the digital clocks may also be driven on to the global bus to allow the clocks to route directly to I/O pins. This is shown in the global interconnect block diagrams on the following pages. For more information on this feature, see the Digital Clocks chapter on page 213.

Each global input and global output has a ***keeper*** on it. The keeper sets the value of the global to '1' on system reset and holds the last driven value of the global should it become un-driven.

The primary goal, of the architectural block diagrams that follow, is to communicate the relationship between global buses (GOE, GOO, GIE, GIO) and pins. Note that any global input may be connected to its corresponding global output, using the tristate buffers located in the corners of the figures. Also, global outputs may be shorted to global inputs using these tristate buffers. The rectangle in the center of the figure represents the array of digital PSoC blocks.

OBSOLETE

11.1.1 56-Pin Global Interconnect

The 56-pin PowerPSoC device has two partial ports connected to the even global buses and one partial port connected to the odd global buses. Table 11-1 lists the mapping between global buses and ports.

Table 11-1. 56-Pin Global Bus to Port Mapping

Global Bus	Ports
GIO[7:0], GOO[7:0]	P1
GIE[7:0], GOE[7:0]	P0, P2

Because several ports are connected to a single global bus, there is a one-to-many mapping between individual nets in a global bus and port pins. For example, if GIO[1] is used to bring an input signal into a digital PSoC block, pin P1[1] may be used. The same is true for the outputs. For example, if GOE[3] is used to carry a signal from a digital PSoC block to a port pin, any or all of the following pins may be used: P0[3].

Figure 11-1. Global Interconnect Block Diagram for the 56-Pin Package

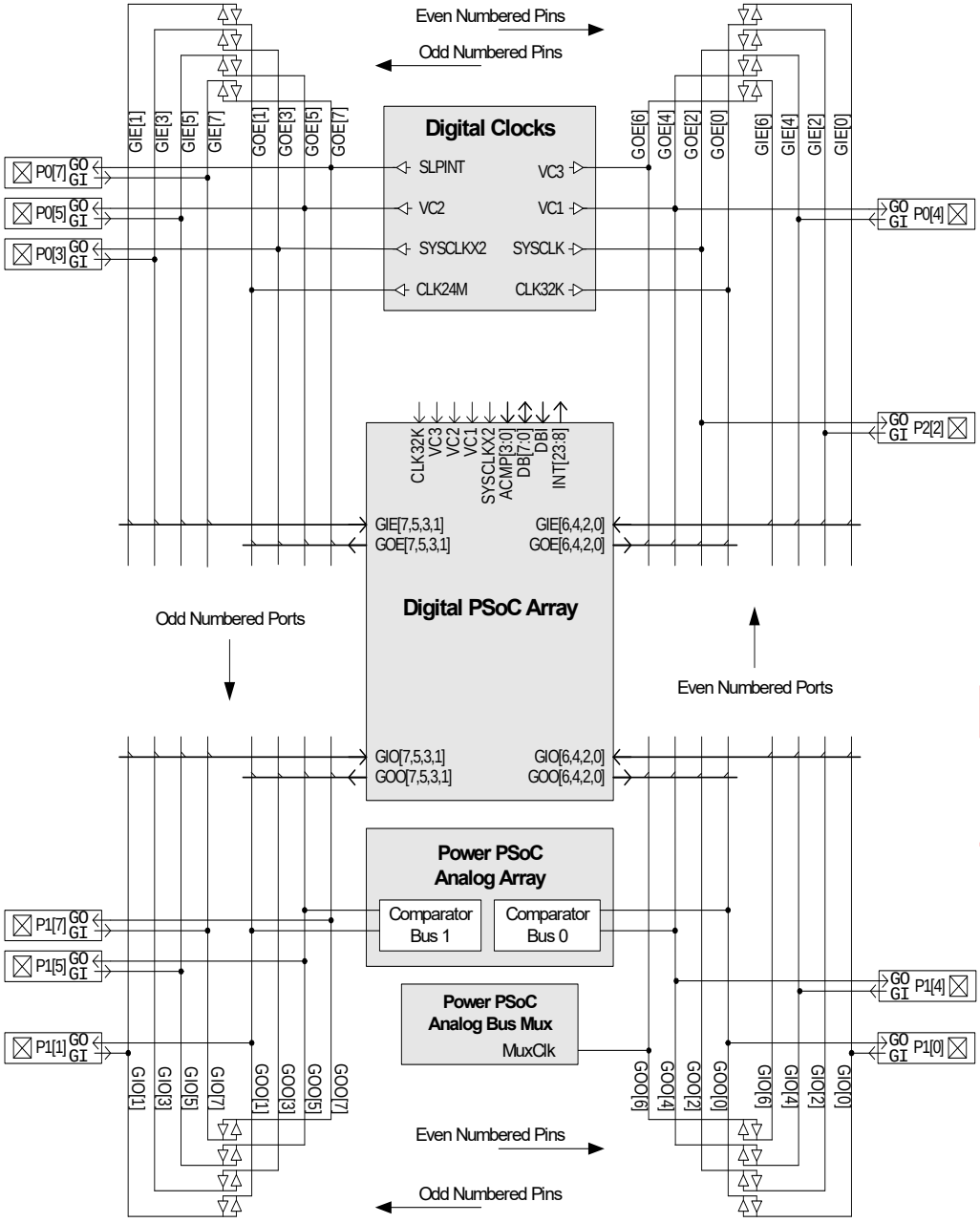

11.2 Register Definitions

The following registers are associated with the Global Digital Interconnect and are listed in address order. Each register description has an associated register table showing the bit structure for that register. For a complete table of GDI registers, refer to the "Summary Table of the Digital Registers" on page 106.

Because the CY8CLED0xx0x PowerPSoC device has two digital rows, the configurable GDI is used to resynchronize the ***feedback*** between two digital PSoC blocks. This is accomplished by connecting a digital PSoC block's output to a global output that has been configured to drive its corresponding global input. The global input is chosen to drive one of the row inputs. The row input is configured to synchronize the signal to the device's 24 MHz system clock. Finally, the row input is used by the second digital PSoC block.

11.2.1 GDI_x_IN Registers

Add.	Name	Bit 7	Bit 6	Bit 5	Bit 4	Bit 3	Bit 2	Bit 1	Bit 0	Access
1,D0h	GDI_O_IN	GIONOUT7	GIONOUT6	GIONOUT5	GIONOUT4	GIONOUT3	GIONOUT2	GIONOUT1	GIONOUT0	RW : 00
1,D1h	GDI_E_IN	GIENOUT7	GIENOUT6	GIENOUT5	GIENOUT4	GIENOUT3	GIENOUT2	GIENOUT1	GIENOUT0	RW : 00

The Global Digital Interconnect Odd and Even Input Registers (GDI_x_IN) are used to configure a global input to drive a global output.

The PowerPSoC device has a configurable Global Digital Interconnect (GDI). Note that the GDI_x_IN and GDI_x_OU registers should never have the same bits connected. This would result in multiple drivers of one bus.

Bits 7 to 0: GIxNOUTx. Using the configuration bits in the GDI_x_IN registers, a global input net may be configured to drive its corresponding global output net. For example,

$$GIE[7] \rightarrow GOE[7]$$

The configurability of the GDI does not allow odd and even nets or nets with different indexes to be connected. The following are examples of connections that are not possible in the PowerPSoC devices.

$$GOE[7] \not\rightarrow GIO[7]$$
$$GOE[0] \not\rightarrow GIE[7]$$

There are a total of 16 bits that control the ability of global inputs to drive global outputs. These bits are in the GDI_x_IN registers. Table 11-2 enumerates the meaning of each bit position in either of the GDI_O_IN or GDI_E_IN registers.

Table 11-2. GDI_x_IN Register

GDI_x_IN[0]	0: No connection between GIx[0] to GOx[0] 1: Allow GIx[0] to drive GOx[0]
GDI_x_IN[1]	0: No connection between GIx[1] to GOx[1] 1: Allow GIx[1] to drive GOx[1]
GDI_x_IN[2]	0: No connection between GIx[2] to GOx[2] 1: Allow GIx[2] to drive GOx[2]
GDI_x_IN[3]	0: No connection between GIx[3] to GOx[3] 1: Allow GIx[3] to drive GOx[3]
GDI_x_IN[4]	0: No connection between GIx[4] to GOx[4] 1: Allow GIx[4] to drive GOx[4]
GDI_x_IN[5]	0: No connection between GIx[5] to GOx[5] 1: Allow GIx[5] to drive GOx[5]
GDI_x_IN[6]	0: No connection between GIx[6] to GOx[6] 1: Allow GIx[6] to drive GOx[6]
GDI_x_IN[7]	0: No connection between GIx[7] to GOx[7] 1: Allow GIx[7] to drive GOx[7]

For additional information, refer to the GDI_O_IN register on page 495 and the GDI_E_IN register on page 496.

OBSOLETE

11.2.2 GDI_x_OU Registers

Add.	Name	Bit 7	Bit 6	Bit 5	Bit 4	Bit 3	Bit 2	Bit 1	Bit 0	Access
1,D2h	GDI_O_OU	GOOUTIN7	GOOUTIN6	GOOUTIN5	GOOUTIN4	GOOUTIN3	GOOUTIN2	GOOUTIN1	GOOUTIN0	RW : 00
1,D3h	GDI_E_OU	GOEUTIN7	GOEUTIN6	GOEUTIN5	GOEUTIN4	GOEUTIN3	GOEUTIN2	GOEUTIN1	GOEUTIN0	RW : 00

The Global Digital Interconnect Odd and Even Output Registers (GDI_x_OU) are used to configure a global output to drive a global input.

The PowerPSoC device has a configurable Global Digital Interconnect (GDI). Note that the GDI_x_IN and GDI_x_OU registers should never have the same bits connected. This would result in multiple drivers of one bus.

Bits 7 to 0: GOxUTINx. Using the configuration bits in the GDI_x_OU registers, a global output net may be configured to drive its corresponding global input. For example,

$$GOE[7] \rightarrow GIE[7]$$

The configurability of the GDI does not allow odd and even nets or nets with different indexes to be connected. The following are examples of connections that are not possible in the PowerPSoC devices.

$$GOE[7] \not\rightarrow GIO[7]$$
$$GOE[0] \not\rightarrow GIE[7]$$

There are a total of 16 bits that control the ability of global outputs to drive global inputs. These bits are in the GDI_x_OU registers. Table 11-3 enumerates the meaning of each bit position in either of the GDI_O_OU or GDI_E_OU registers.

Table 11-3. GDI_x_OU Register

GDI_x_OU[0]	0: No connection between GIx[0] to GOx[0] 1: Allow GOx[0] to drive GIx[0]
GDI_x_OU[1]	0: No connection between GIx[1] to GOx[1] 1: Allow GOx[1] to drive GIx[1]
GDI_x_OU[2]	0: No connection between GIx[2] to GOx[2] 1: Allow GOx[2] to drive GIx[2]
GDI_x_OU[3]	0: No connection between GIx[3] to GOx[3] 1: Allow GOx[3] to drive GIx[3]
GDI_x_OU[4]	0: No connection between GIx[4] to GOx[4] 1: Allow GOx[4] to drive GIx[4]
GDI_x_OU[5]	0: No connection between GIx[0] to GOx[5] 1: Allow GOx[5] to drive GIx[5]
GDI_x_OU[6]	0: No connection between GIx[6] to GOx[6] 1: Allow GOx[6] to drive GIx[6]
GDI_x_OU[7]	0: No connection between GIx[7] to GOx[7] 1: Allow GOx[7] to drive GIx[7]

For additional information, refer to the GDI_O_OU register on page 497 and the GDI_E_OU register on page 498.

OBSOLETE

12. Array Digital Interconnect (ADI)

This chapter presents the Array Digital Interconnect (ADI). The digital PSoC array uses a scalable architecture that is designed to support from two digital PSoC rows, as defined in the Row Digital Interconnect (RDI) chapter on page 115. The digital PSoC array does not have any configurable interconnect; therefore, there are no associated registers in this chapter.

12.1 Architectural Description

The Array Digital Interconnect (ADI) for the CY8CLED0xx0x PowerPSoC device is shown in Figure 12-1. The ADI is not configurable; therefore, the information in this chapter is provided to improve the reader's understanding of the structure.

Figure 12-1. Digital PSoC Block Array Structure

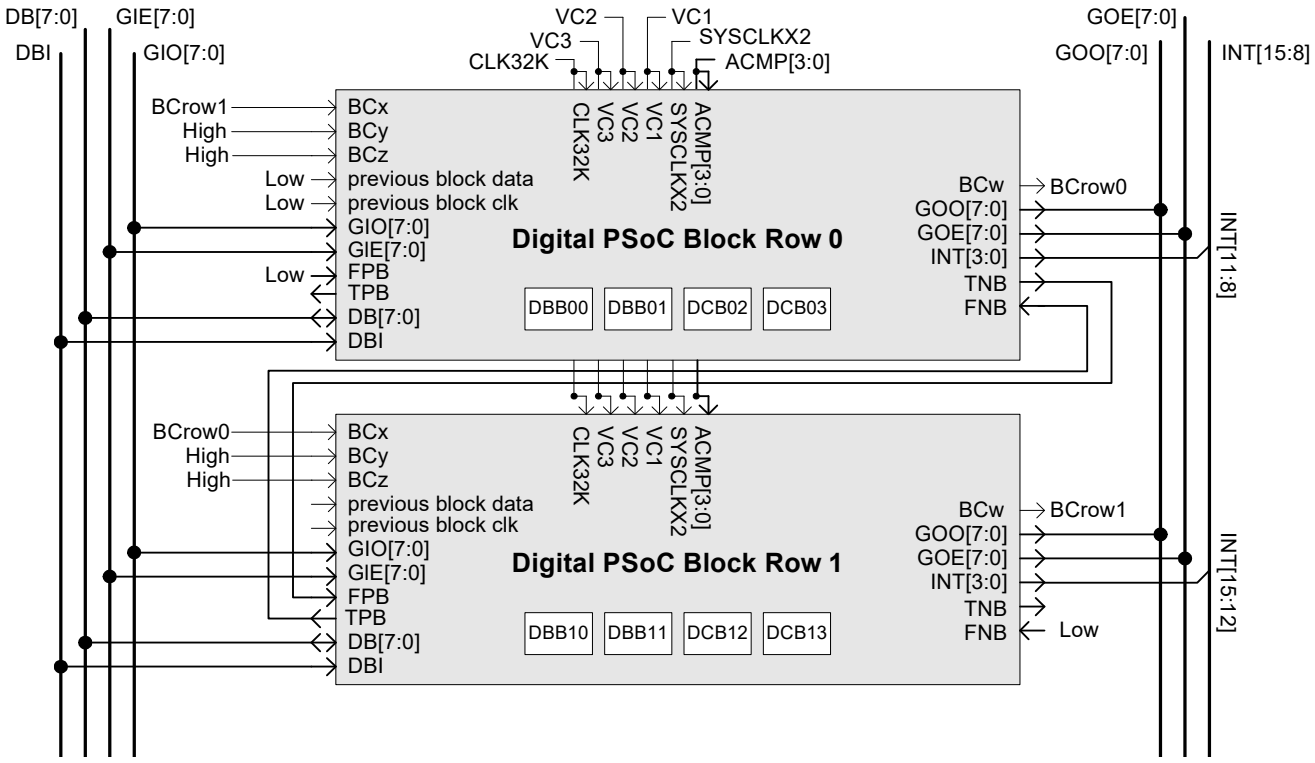

In Figure 12-1, the detailed view of a Digital PSoC block row has been replaced by a box labeled digital PSoC block row x. The rest of this figure illustrates how all rows are connected to the same globals, clocks, and so on. The figure also illustrates how the broadcast clock nets (BCrowx) are connected between rows.

The digital PSoC blocks are arranged into rows and the ADI provides a regular interconnect architecture between the Global Digital Interconnect (GDI) and the Row Digital Interconnect (RDI), regardless of the number of rows available in a particular device. The most important aspect of the ADI and the digital PSoC rows is that all digital PSoC rows have the same connections to global inputs and outputs. The connections that make a row's position unique are explained as follows.

- **Register Address**: Rows and the blocks within them need to have unique register addresses.
- **Interrupt Priority**: Each digital PSoC block has its own interrupt priority and vector. A row's position in the array determines the relative priority of the digital PSoC blocks within the row. The lower the row number, the higher the interrupt priority, and the lower the interrupt vector address.
- **Broadcast**: Each digital PSoC row has an internal ***broadcast net*** that may be either driven internally, by one of the four digital PSoC blocks, or driven externally. In the case where the broadcast net is driven externally, the source may be any one of the other rows in the array. Therefore, depending on the row's position in the array, it will have different options for driving its broadcast net.
- **Chaining Position**: Rows in the array form a string of digital blocks equal in length to the number of rows multiplied by four. The first block in the first row and the last block in the last row are not connected; therefore, the array does not form a loop. The first row in the array has its previous ***chaining*** inputs tied low. If there is a second row in the array, the next chaining outputs are connected to the next row. For the last row in the array, the next inputs are tied low.

OBSOLETE

13. Row Digital Interconnect (RDI)

This chapter explains the Row Digital Interconnect (RDI) and its associated registers. This chapter discusses a single digital PSoC block row. It does not discuss the functions, inputs, or outputs for individual digital PSoC blocks; nor does it cover specific instances of multiple rows in a single part. Therefore, the information contained here is valid for 2 row configurations. Information about individual digital PSoC blocks is covered in the Digital Blocks chapter on page 123. For a complete table of the RDI registers, refer to the "Summary Table of the Digital Registers" on page 106. For a quick reference of all PowerPSoC registers in address order, refer to the Register Details chapter on page 361.

13.1 Architectural Description

Many signals pass through the digital PSoC block row on their way to or from individual ***digital blocks***. However, only a small number of signals pass though configurable circuits on their way to and from digital blocks. The configurable circuits allow for greater flexibility in the connections between digital blocks and global buses. What follows is a discussion of the signals that are configurable by way of the registers listed in the "Register Definitions" on page 117.

In Figure 13-1, within a digital PSoC block row, there are four digital PSoC Blocks. The first two blocks are of the type basic (DBB). The second two are of the type communication (DCB). This figure shows the connections between digital blocks within a row. Only the signals that pass outside the gray background box in Figure 13-1 are shown at the next level of hierarchy in Figure 13-2 on page 116.

In Figure 13-2, the detailed view shown in Figure 13-1 of the four PSoC block grouping, has been replaced by the box in the center of the figure labeled "4 PSoC Block Grouping." The rest of the configurable nature of the Row Inputs (RI), Row Outputs (RO), and Broadcast clock net (BC) is shown for the next level of hierarchy.

Figure 13-1. Detailed View of Two PSoC Block Grouping

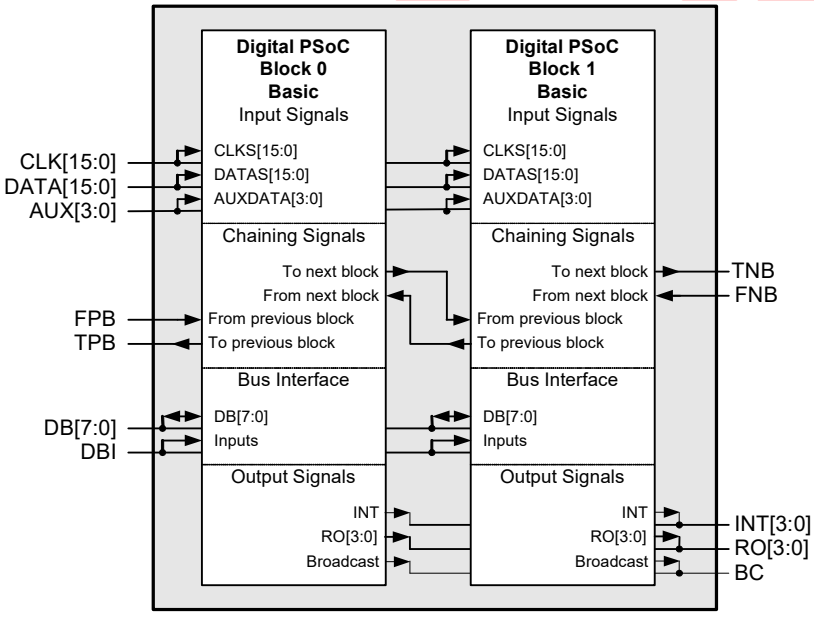

As shown in Figure 13-2, there is a ***keeper*** connected to the row ***broadcast net*** and each of the row outputs. The keeper sets the value of these nets to '1' on system reset and holds the value of the net should it become un-driven.

Notice on the left side of Figure 13-2 that global inputs (GIE[n] and GIO[n]) are inputs to 4-to-1 multiplexers. The output of these muxes are Row Inputs (RI[x]). Because there are four 4-to-1 muxes, each with a unique set of inputs, a row has access to every global input line in a PowerPSoC device.

Figure 13-2. Digital PSoC Block Row Structure

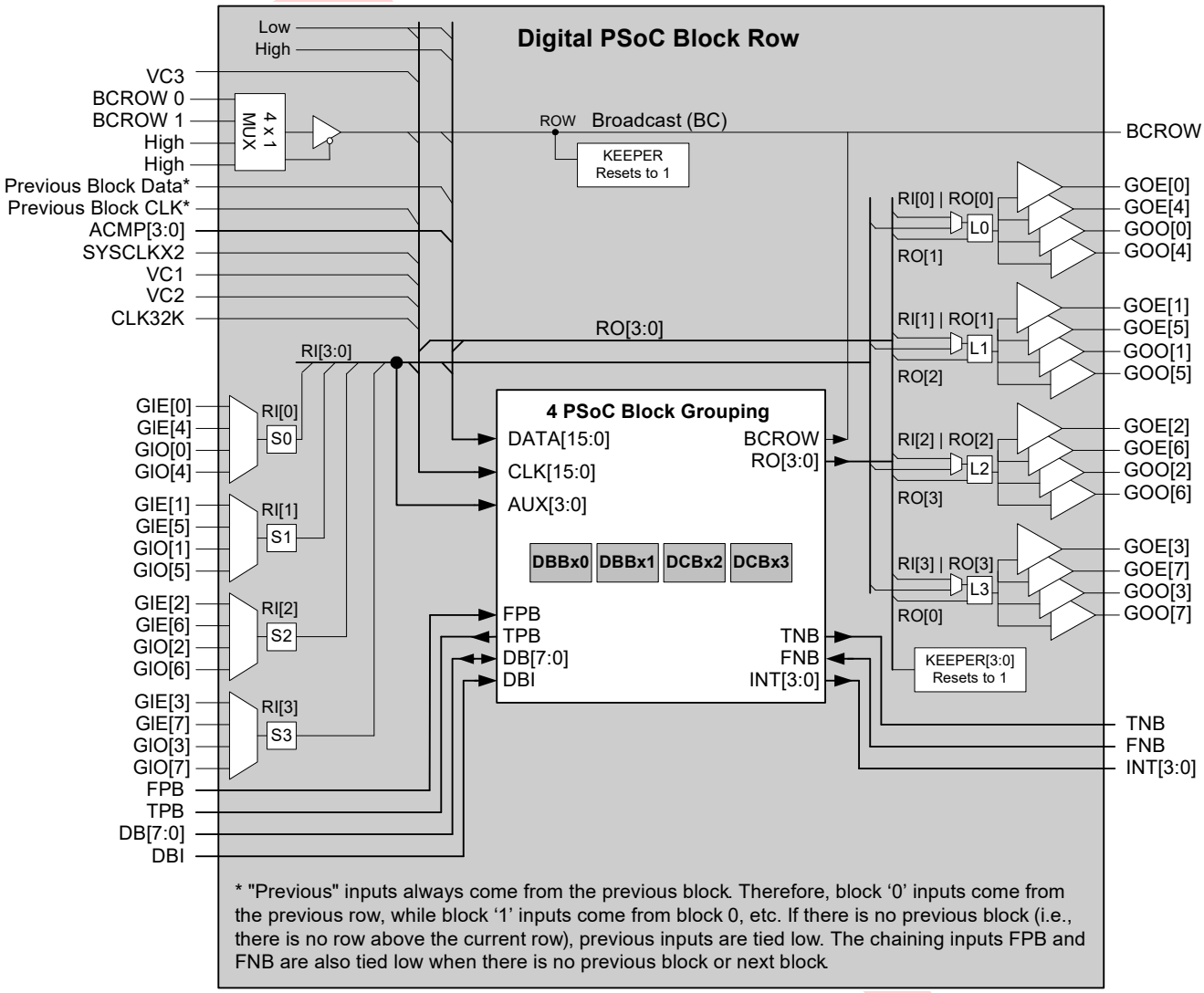

13.2 Register Definitions

The following registers are associated with the Row Digital Interconnect (RDI) and are listed in address order. Each register description has an associated register table showing the bit structure for that register. For a complete table of RDI registers, refer to the "Summary Table of the Digital Registers" on page 106.

Only certain bits are accessible to be read or written. The bits that are grayed out throughout this manual are reserved bits and are not detailed in the register descriptions that follow. Reserved bits should always be written with a value of '0'.

The only configurable inputs to a digital PSoC block row are the Global Input Even and Global Input Odd 8-bit buses. The only configurable outputs from the digital PSoC block row are the Global Output Even and Global Output Odd 8-bit buses. Figure 13-2 on page 116 illustrates the relationships between global signals and row signals.

13.2.1 RDIxRI Register

Add.	Name	Bit 7	Bit 6	Bit 5	Bit 4	Bit 3	Bit 2	Bit 1	Bit 0	Access
x,B0h	RDI0RI	RI3[1:0]		RI2[1:0]		RI1[1:0]		RI0[1:0]		RW : 00
x,B8h	RDI1RI	RI3[1:0]		RI2[1:0]		RI1[1:0]		RI0[1:0]		RW : 00

LEGEND
x An "x" before the comma in the address field indicates that the register exists in both register banks.

The Row Digital Interconnect Row Input Register (RDIxRI) is used to control the input mux that determines which global inputs will drive the row inputs.

The RDIxRI Register and the RDIxSYN Register are the only two registers that affect digital PSoC row input signals. All other registers are related to output signal configuration.

The RDIxRI register has select bits that are used to control four muxes, where "x" denotes a place holder for the row index. Table 13-1 lists the meaning for each mux's four possible settings.

Bits 7 and 6: RI3[1:0]. These bits control the input mux for row 3.

Bits 5 and 4: RI2[1:0]. These bits control the input mux for row 2.

Bits 3 and 2: RI1[1:0]. These bits control the input mux for row 1.

Bits 1 and 0: RI0[1:0]. These bits control the input mux for row 0.

Table 13-1. RDIxRI Register

RI3[1:0]	0h: GIE[3] 1h: GIE[7] 2h: GIO[3] 3h: GIO[7]
RI2[1:0]	0h: GIE[2] 1h: GIE[6] 2h: GIO[2] 3h: GIO[6]
RI1[1:0]	0h: GIE[1] 1h: GIE[5] 2h: GIO[1] 3h: GIO[5]
RI0[1:0]	0h: GIE[0] 1h: GIE[4] 2h: GIO[0] 3h: GIO[4]

For additional information, refer to the RDIxRI register on page 428.

OBSOLETE

13.2.2 RDIxSYN Register

Add.	Name	Bit 7	Bit 6	Bit 5	Bit 4	Bit 3	Bit 2	Bit 1	Bit 0	Access
x,B1h	RDI0SYN					RI3SYN	RI2SYN	RI1SYN	RI0SYN	RW : 00
x,89h	RDI1SYN					RI3SYN	RI2SYN	RI1SYN	RI0SYN	RW : 00

LEGEND
x An "x" before the comma in the address field indicates that the register exists in both register banks.

The Row Digital Interconnect Synchronization Register (RDIxSYN) is used to control the input synchronization.

The RDIxRI Register and the RDIxSYN Register are the only two registers that affect digital PSoC row input signals. All other registers are related to output signal configuration.

By default, each row input is double synchronized to the SYSCLK (system clock), which runs at 24 MHz unless external clocking mode is enabled. However, a user may choose to disable this synchronization by setting the appropriate RIxSYN bit in the RDIxSYN register. Table 13-2 lists the bit meanings for each implemented bit of the RDIxSYN register.

Bit 3: RI3SYN. This bit controls the input synchronization for row 3.

Bit 2: RI2SYN. This bit controls the input synchronization for row 2.

Bit 1: RI1SYN. This bit controls the input synchronization for row 1.

Bit 0: RI0SYN. This bit controls the input synchronization for row 0.

Table 13-2. RDIxSYN Register

RI3SYN	0: Row input 3 is synchronized to SYSCLK 1: Row input 3 is passed without synchronization
RI2SYN	0: Row input 2 is synchronized to SYSCLK 1: Row input 2 is passed without synchronization
RI1SYN	0: Row input 1 is synchronized to SYSCLK 1: Row input 1 is passed without synchronization
RI0SYN	0: Row input 0 is synchronized to SYSCLK 1: Row input 0 is passed without synchronization

For additional information, refer to the RDIxSYN register on page 429.

OBSOLETE

13.2.3 RDIxIS Register

Add.	Name	Bit 7	Bit 6	Bit 5	Bit 4	Bit 3	Bit 2	Bit 1	Bit 0	Access
x,B2h	RDI0IS			BCSEL[1:0]		IS3	IS2	IS1	IS0	RW : 00
x,BAh	RDI1IS			BCSEL[1:0]		IS3	IS2	IS1	IS0	RW : 00

LEGEND
x An “x” before the comma in the address field indicates that the register exists in both register banks.

The Row Digital Interconnect Input Select Register (RDIxIS) is used to configure the A inputs to the digital row LUTS and select a broadcast driver from another row if present.

Each LUT has two inputs, where one of the inputs is configurable (Input A) and the other input (Input B) is fixed to a row output. Figure 13-3 presents an example of LUT configuration.

Figure 13-3. Example of LUT0 Configuration

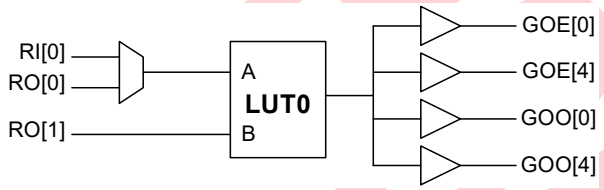

These bits are the Input B for the ***lookup table (LUT)***. The configurable LUT input (Input A) chooses between a single row output and a single row input. Table 13-3 lists the options for each LUT in a row. The bits are labeled IS, meaning Input Select. The LUT’s fixed input is always the RO[LUT number + 1], such as LUT0’s fixed input is RO[1], LUT1’s fixed input is RO[2], …, and LUT3’s fixed input is RO[0].

Bits 5 and 4: BCSEL[1:0]. These bits are used to determine which digital PSoC row will drive the local broadcast net. If a row number is selected that does not exist, the broadcast net is driven to a logic 1 value. If any digital PSoC block in the local row has its DxBxFN[BCEN] bit set, the broadcast select is disabled. See the “DxBxxFN Registers” on page 140.

Bit 3: IS3. This bit controls the ‘A’ input of LUT 3.

Bit 2: IS2. This bit controls the ‘A’ input of LUT 2.

Bit 1: IS1. This bit controls the ‘A’ input of LUT 1.

Bit 0: IS0. This bit controls the ‘A’ input of LUT 0.

Table 13-3. RDIxIS Register Bits

BCSEL[1:0]	0: Row broadcast net driven by row 0 broadcast net.* 1: Row broadcast net driven by row 0 broadcast net.* 2: Reserved. 3: Reserved.
IS3	0: The ‘A’ input of LUT3 is RO[3] 1: The ‘A’ input of LUT3 is RI[3]
IS2	0: The ‘A’ input of LUT2 is RO[2] 1: The ‘A’ input of LUT2 is RI[2]
IS1	0:The ‘A’ input of LUT1 is RO[1] 1: The ‘A’ input of LUT1 is RI[1]
IS0	0: The ‘A’ input of LUT0 is RO[0] 1: The ‘A’ input of LUT0 is RI[0]
* When the BCSEL value is equal to the row number, the tri-state buffer that drives the row broadcast net from the input select mux is disabled, so that one of the row’s blocks may drive the local row broadcast net. * Refer to Figure 13-2 on page 116. * If the row is not present in the part, the selection provides a logic 1 value.	

For additional information, refer to the RDIxIS register on page 430.

OBSOLETE

13.2.4 RDIxLTx Registers

Add.	Name	Bit 7	Bit 6	Bit 5	Bit 4	Bit 3	Bit 2	Bit 1	Bit 0	Access
x,B3h	RDI0LT0	LUT1[3:0]				LUT0[3:0]				RW : 00
x,B4h	RDI0LT1	LUT3[3:0]				LUT2[3:0]				RW : 00
x,BBh	RDI1LT0	LUT1[3:0]				LUT0[3:0]				RW : 00
x,BCh	RDI1LT1	LUT3[3:0]				LUT2[3:0]				RW : 00

LEGEND
x An “x” before the comma in the address field indicates that the register exists in both register banks.

The Row Digital Interconnect Logic Table Register 0 and 1 (RDIxLT0 and RDIxLT1) are used to select the logic function of the digital row LUTS.

The outputs from a digital PSoC row are a bit more complicated than the inputs. Figure 13-2 on page 116 illustrates the output circuitry in a digital PSoC row. In the figure, find a block labeled Lx. This block represents a 2-input lookup table (LUT). The LUT allows the user to specify any one of 16 logic functions that should be applied to the two inputs.

The output of the logic function will determine the value that may be driven on to the Global Output Even and Global Output Odd buses. Table 13-4 lists the relationship between a lookup table’s four configuration bits and the resulting logic function. Some users may find it easier to determine the proper configuration bits setting, by remembering that the configuration’s bits represent the output column of a two-input logic truth table. Table 13-4 lists seven examples of the relationship between the LUT’s output column for a truth table and the LUTx[3:0] configuration bits. Figure 13-3 on page 119 presents an example of LUT configuration.

Bits 7 to 4: LUTx[3:0]. These configuration bits are for a row output LUT.

Bits 3 to 0: LUTx[3:0]. These configuration bits are for a row output LUT.

For additional information, refer to the RDIxLT0 register on page 431 and the RDIxLT1 register on page 432.

Table 13-4. Example LUT Truth Tables

A	B	AND	OR	A+$\overline{B}$	A&$\overline{B}$	A	B	True
0	0	0	0	1	0	0	0	1
0	1	0	1	0	0	0	1	1
1	0	0	1	1	1	1	0	1
1	1	1	1	1	0	1	1	1
LUTx[3:0]		1h	7h	Bh	2h	3h	5h	Fh

Table 13-5. RDIxLTx Register

LUTx[3:0]	0h: 0000: FALSE 1h: 0001: A .AND. $\overline{B}$ 2h: 0010: A .AND. $\overline{B}$ 3h: 0011: $\overline{A}$ 4h: 0100: $\overline{A}$ .AND. B 5h: 0101: B 6h: 0110: A .XOR. B 7h: 0111: A .OR. B 8h: 1000: A .NOR. B 9h: 1001: $\overline{A}$ .XNOR. B Ah: 1010: $\overline{B}$ Bh: 1011: $\overline{A}$ .OR. $\overline{B}$ Ch: 1100: $\overline{A}$ Dh: 1101: $\overline{A}$ .OR. B Eh: 1110: A. NAND. B Fh: 1111: TRUE

OBSOLETE

13.2.5 RDIxROx Registers

Add.	Name	Bit 7	Bit 6	Bit 5	Bit 4	Bit 3	Bit 2	Bit 1	Bit 0	Access
x,B5h	RDI0RO0	GOO5EN	GOO1EN	GOE5EN	GOE1EN	GOO4EN	GOO0EN	GOE4EN	GOE0EN	RW : 00
x,B6h	RDI0RO1	GOO7EN	GOO3EN	GOE7EN	GOE3EN	GOO6EN	GOO2EN	GOE6EN	GOE2EN	RW : 00
x,BDh	RDI1RO0	GOO5EN	GOO1EN	GOE5EN	GOE1EN	GOO4EN	GOO0EN	GOE4EN	GOE0EN	RW : 00
x,BEh	RDI1RO1	GOO7EN	GOO3EN	GOE7EN	GOE3EN	GOO6EN	GOO2EN	GOE6EN	GOE2EN	RW : 00

LEGEND
x An "x" before the comma in the address field indicates that the register exists in both register banks.

The Row Digital Interconnect Row Output Register 0 and 1 (RDIxRO0 and RDIxRO1) are used to select the global nets that the row outputs drive.

The final configuration bits for outputs from digital PSoC rows are in the two RDIxROx registers. These registers hold the 16 bits that can individually enable the tri-state buffers that connect to all eight of the Global Output Even lines and all eight of the Global Output Odd lines to the row LUTs.

The input to these tri-state drivers are the outputs of the row's LUTs, as shown in Figure 13-2. This means that any row can drive any global output. Keep in mind that tri-state drivers are being used to drive the global output lines; therefore, it is possible for a part, with more than one digital PSoC row, to have multiple drivers on a single global output line. It is the user's responsibility to ensure that the part is not configured with multiple drivers on any of the global output lines. Figure 13-3 on page 119 presents an example LUT configuration.

13.2.5.1 RDIxRO0 Register

Bits 7 to 4: GOxxEN. These configuration bits enable the tri-state buffers that connect to the global output even lines for LUT 1.

Bits 3 to 0: GOxxEN. These configuration bits enable the tri-state buffers that connect to the global output even lines for LUT 0.

For additional information, refer to the RDIxRO0 register on page 433.

13.2.5.2 RDIxRO1 Register

Bits 7 to 4: GOxxEN. These configuration bits enable the tri-state buffers that connect to the global output even lines for LUT 3.

Bits 3 to 0: GOxxEN. These configuration bits enable the tri-state buffers that connect to the global output even lines for LUT 2.

For additional information, refer to the RDIxRO1 register on page 434.

13.3 Timing Diagram

Figure 13-4. Optional Row Input Synchronization to SYSCLK

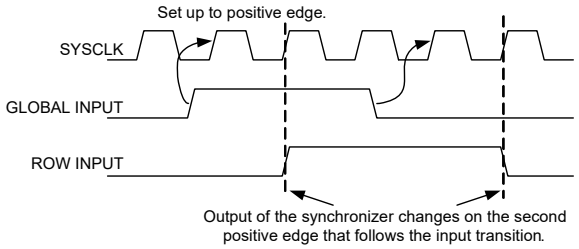

OBSOLETE

OBSOLETE

14. Digital Blocks

This chapter covers the configuration and use of the digital PSoC blocks and their associated registers. For a complete table of the Digital PSoC Block registers, refer to the "Summary Table of the Digital Registers" on page 106. For a quick reference of all PowerPSoC registers in address order, refer to the Register Details chapter on page 361.

14.1 Architectural Description

At the top level, the main components of the digital block are the data path, input multiplexers (muxes), output de-muxes, configuration registers, and chaining signals (see Figure 14-1).

Figure 14-1. Digital Blocks Top Level Block Diagram

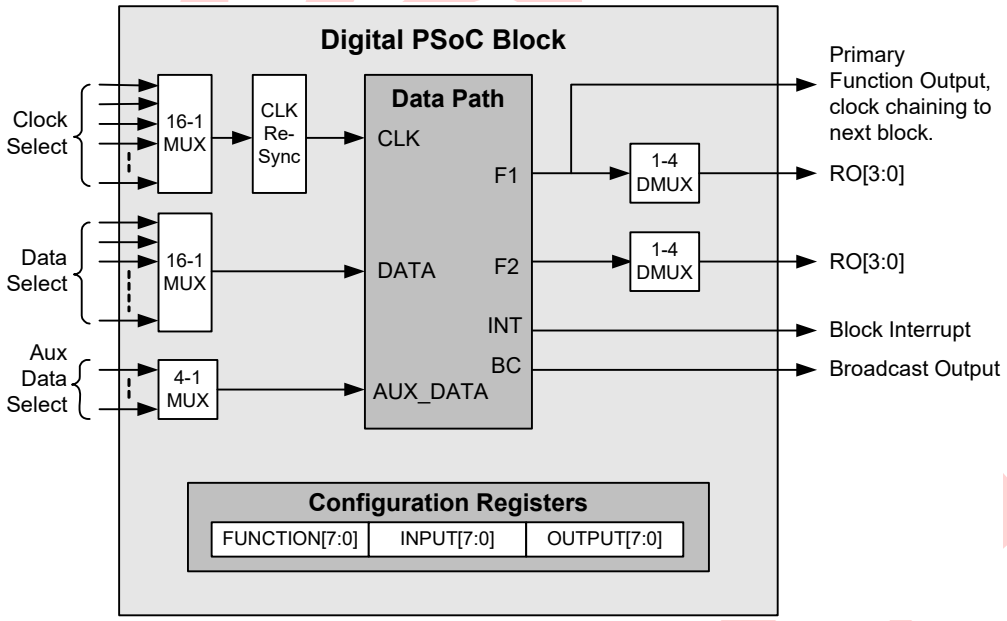

All digital PSoC blocks may be configured to perform any one of five basic functions: timer, counter, ***pulse width modulator (PWM)***, pseudo random sequence (PRS), or ***cyclic redundancy check (CRC)***. These functions may be used by configuring an individual PSoC block or chaining several PSoC blocks together to form functions that are greater than 8 bits. Digital communications PSoC blocks have two additional functions: master or slave SPI and a full duplex ***UART***.

Each digital PSoC block's function is independent of all other PSoC blocks. Up to seven registers are used to determine the function and state of a digital PSoC block. These registers are discussed in the Register Definitions section. Digital PSoC block function registers end with FN. The individual bit settings for a block's function register are listed in Table 14-14 on page 140. The input registers end with IN and its bit meanings are listed in Table 14-16 on page 141. Finally, the block's outputs are controlled by the output register which ends in OU.

Each digital PSoC block also has three data registers (DR0, DR1, and DR2) and one control register (CR0). The bit meanings for these registers are heavily function dependent and are discussed with each function's description.

In addition to seven registers that control the digital PSoC block's function and state, a separate interrupt mask bit is available for each digital PSoC block. Each digital PSoC block has a unique interrupt vector; and therefore, it can have its own interrupt service routine.

14.1.1 Input Multiplexers

Typically, each function has a clock and a data input that may be selected from a variety of sources. Each of these inputs is selected with a 16-to-1 input mux.

In addition, there is a 4-to-1 mux which provides an auxiliary input for the SPI Slave function that requires three inputs: Clock, Data, and SS_ (unless the SS_ is forced active with the Aux I/O Enable bit). The inputs to this mux are intended to be a selection of the row inputs.

14.1.2 Input Clock Resynchronization

Digital blocks allow a clock selection from one of 16 sources. Possible sources are the system clocks (VC1, VC2, VC3, SYSCLK, and SYSCLKX2), row inputs, and other digital block outputs. To manage clock ***skew*** and ensure that the interfaces between blocks meet timing in all cases, all digital block input clocks must be resynchronized to either SYSCLK or SYSCLKX2, which are the source clocks for all the PowerPSoC device clocking. Also, SYSCLK or SYSCLKX2 may be used directly. The AUXCLK bits in the DxBxxOU register are used to specify the input synchronization. The following rules apply to the use of input clock resynchronization.

1. If the clock input is derived (for example, divided down) from SYSCLK, re-synchronize to SYSCLK at the digital block. Most the PowerPSoC device clocks are in this category. For example, VC1 and VC2, and the output of other blocks clocked by VC1 and VC2, or SYSCLK (for setting see Table 14-1).
2. If the clock input is derived from SYSCLKX2, re-synchronize to SYSCLKX2. For example, VC3 clocked by SYSCLKX2 or other digital blocks clocked by SYSCLKX2 (for setting see Table 14-1).
3. Choose direct SYSCLK for clocking directly off of SYSCLK (for setting see Table 14-1).
4. Choose direct SYSCLKX2 (select SYSCLKX2 in the Clock Input field of the DxBxxIN register) for clocking directly off of SYSCLKX2.
5. Bypass Synchronization. This should be a very rare selection; because if clocks are not synchronized, they may fail setup to CPU read and write commands. However, it is possible for an external pin to asynchronously clock a digital block. For example, if the user is willing to synchronize CPU interaction through interrupts or other techniques (setting 00 in AUXCLK). This setting is also required for blocks to remain active while in sleep.

The note below enumerates configurations that are not allowed, although the hardware does not prevent them. The clock dividers (VC1, VC2, and VC3) may not be configured in such a way as to create an output clock that is equal to SYSCLK or SYSCLKX2.

Note If the input clock frequency matches the frequency of the clock used for synchronization, the block will never receive a clock (see Figure 14-2). With respect to SYSCLK, this can happen in the following cases:

- Using VC1 configured as divide by one.
- Using VC2 with VC1 and VC2 both configured as divide by one.
- Using VC3 divided by one with a source of VC1 divided by one.
- Using VC3 divided by one with a source of VC2, where both VC1 and VC2 are divided by one.
- Using VC3 divided by one with SYSCLK source.

In all of these cases, SYSCLK should be selected directly in the block. Similarly, if VC3 is configured as divide by one with a source of SYSCLKX2, then SYSCLKX2 should be selected to clock the block directly instead of VC3.

The clock resynchronizer is illustrated in Figure 14-2.

Figure 14-2. Input Clock Resynchronization

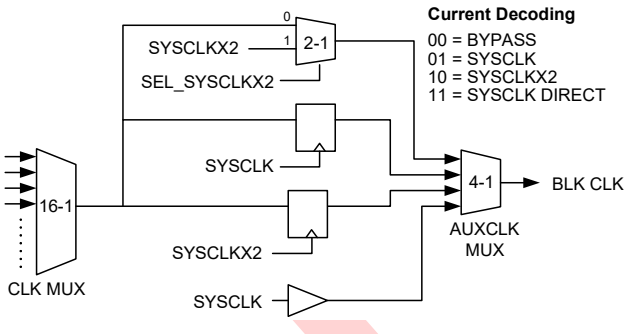

In sleep, SYSCLK is powered down, and therefore input synchronization is not available.

Table 14-1. AUXCLK Bit Selections

Code	Description	Usage
00	Bypass	Use this setting only when SYSCLKX2 (48 MHz) is selected. Other than this case, asynchronous clock inputs are not recommended. This setting is also required for blocks to remain active while in sleep.
01	Resynchronize to SYSCLK (24 MHz)	Use this setting for any SYSCLK-based clock. VC1, VC2, VC3 driven by SYSCLK, digital blocks with SYSCLK-based source clocks, broadcast bus with source based on SYSCLK, row input and row outputs with source based on SYSCLK.
10	Resynchronize to SYSCLKX2 (48 MHz)	Use this setting for any SYSCLKX2-based clock. VC3 driven by SYSCLKX2, digital blocks with SYSCLKX2-based source clocks, broadcast bus with source based on SYSCLKX2, row input and row outputs with source based. on SYSCLKX2.
11	SYSCLK Direct	Use this setting to clock the block directly using SYSCLK. Note that this setting is not strictly related to clock resynchronization, but since SYSCLK cannot resync itself, it allows a direct skew controlled SYSCLK source.

14.1.2.1 Clock Resynchronization Summary

- Digital PSoC blocks have extremely flexible clocking configurations. To maintain reliable timing, input clocks must be resynchronized.
- The master clock for any clock in the system is either SYSCLK or SYSCLKX2. Determine the master clock for a given input clock and resynchronize to that clock.
- Do not use divide by 1 clocks derived from SYSCLK and SYSCLKX2. Use the direct SYSCLK or SYSCLKX2 clocking option available at the block.

14.1.3 Output De-Multiplexers

Most functions have two outputs: a primary and an auxiliary output, the meaning of which are function dependent. Each of these outputs may be driven onto the row output bus. Each de-mux is implemented with four tri-state drivers. There are two bits in the output register to select one of the four tri-state drivers and an additional bit to enable the selected driver.

14.1.4 Block Chaining Signals

Each digital block has the capability to be chained and to create functions with bit widths greater than eight. There are signals to propagate information, such as Compare, Carry, Enable, Capture and Gate, from one block to the next to implement higher precision functions. The selection made in the function register determines which signals are appropriate for the desired function. User Modules that have been designed to implement digital functions, with greater than 8-bit width, will automatically make the proper selections of the chaining signals, to ensure the correct information flow between blocks.

14.1.5 Input Data Synchronization

Any asynchronous input derived from an external source, such as a GPIO pin input, must be resynchronized through the row input before use into any digital block clock or data input. This is the default mode of operation (resynchronization on).

14.1.6 Timer Function

A timer consists of a period register, a ***synchronous*** down counter, and a capture/compare register, all of which are byte wide. When the timer is disabled and a period value is written into DR1, the period value is also loaded into DR0. When the timer is enabled, the counter counts down until positive terminal count (a count of 00h) is reached. On the next clock edge, the period is reloaded and, on subsequent clocks, counting continues. The terminal count signal is the primary function output. (Refer to the timing diagram for this function on page 143.) This can be configured as a full or half clock cycle.

Hardware capture occurs on the positive edge of the data input. This event transfers the current count from DR0 to DR2. The captured value may then be read directly from DR2. A software capture function is equivalent to a hardware capture. A CPU read of DR0, with the timer enabled, triggers the same capture mechanism. The hardware and software capture mechanisms are OR'ed in the capture circuitry. Since the capture circuitry is positive edge sensitive, during an interval where the hardware capture input is high, a software capture is masked and will not occur.

The timer also implements a compare function between DR0 and DR2. The compare signal is the auxiliary function output. A limitation, in regards to the compare function, is that the capture and compare function both use the same register (DR2). Therefore, if a capture event occurs, it will overwrite the compare value.

Mode bit 1 in the function register sets the compare type (DR0 <= DR2 or DR0 < DR2) and Mode bit 0 sets the interrupt type (Terminal Count or Compare).

Timers may be chained in 8-bit lengths up to 32 bits.

14.1.6.1 Usability Exceptions

The following are usability exceptions for the Timer function.

1. Capture operation is not supported at 48 MHz.
2. DR2 is not writeable when the Timer is enabled.

14.1.6.2 Block Interrupt

The Timer block has a selection of three interrupt sources. Interrupt on Terminal Count (TC) and Interrupt on Compare may be selected in Mode bit 0 of the function register. The third interrupt source, Interrupt on Capture, may be selected with the Capture Interrupt bit in the control register.

- **Interrupt on Terminal Count**: The positive edge of terminal count (primary output) generates an interrupt for this block. The timing of the interrupt follows the TC pulse width setting in the control register.
- **Interrupt on Compare**: The positive edge of compare (auxiliary output) generates an interrupt for this block.
- **Interrupt on Capture**: Hardware or software capture generates an interrupt for this block. The interrupt occurs at the closing of the DR2 latch on capture.

PRELIMINARY

14.1.7 Counter Function

A Counter consists of a period register, a synchronous down counter, and a compare register. The Counter function is identical to the Timer function except for the following points:

- The data input is a counter gate (enable), rather than a capture input. Counters do not implement synchronous capture. The DR0 register in a counter should not be read when it is enabled.
- The compare output is the primary output and the Terminal Count (TC) is the auxiliary output (opposite of the Timer).
- Terminal count output is full cycle only.

When the counter is disabled and a period value is written into DR1, the period value is also loaded into DR0. When the counter is enabled, the counter counts down until terminal count (a count of 00h) is reached. On the next clock edge, the period is reloaded and, on subsequent clocks, counting continues. (Refer to the timing diagram for this function on page 145.)

The counter implements a compare function between DR0 and DR2. The Compare signal is the primary function output. Mode bit 1 sets the compare type (DR0 <= DR2 or DR0 < DR2) and Mode bit 0 sets the interrupt type (terminal count or compare).

The data input functions as a gate to counter operation. The counter will only count and reload when the data input is asserted (logic 1). When the data input is negated (logic 0), counting (including the period reload) is halted.

Counters may be chained in 8-bit blocks up to 32 bits.

14.1.7.1 Usability Exceptions

The following is a usability exception for the Counter function.

1. DR0 may only be read (to transfer DR0 data to DR2) when the block is disabled.

14.1.7.2 Block Interrupt

The Counter block has a selection of two interrupt sources. Interrupt on Terminal Count (TC) and Interrupt on Compare may be selected in Mode bit 0 of the function register.

- **Interrupt on Terminal Count**: The positive edge of terminal count (auxiliary output) generates an interrupt for this block. The timing of the interrupt follows the TC pulse width setting in the control register.
- **Interrupt on Compare**: The positive edge of compare (primary output) generates an interrupt for this block.

14.1.8 Dead Band Function

The Dead Band function generates output signals on both the primary and auxiliary outputs of the block, see Figure 14-3. Each of these outputs is one ***phase*** of a two-phase, non-overlapping clock generated by this function. The two clock phases are never high at the same time and the period between the clock phases is known as the ***dead band***. The width of the dead band time is determined by the value in the period register. This dead band function can be driven with a PWM as an input clock or it can be clocked directly by toggling a bit in software using the Bit-Bang interface. If the clock source is a PWM, this will make a two output PWM with guaranteed non-overlapping outputs. An active asynchronous signal on the KILL data input disables both outputs immediately.

The PWM with the Dead Band User Module configures one or two blocks to create an 8- or 16-bit PWM and configures an additional block as the Dead Band function.

A dead band consists of a period register, a synchronous down counter, and a special dead band circuit. The DR2 register is only used to read the contents of DR0. As with the counter, when the dead band is disabled and a period value is written into DR1, the period value is also loaded into DR0. (Refer to the timing diagrams for this function on page 145.)

Figure 14-3. Dead Band Functional Overview

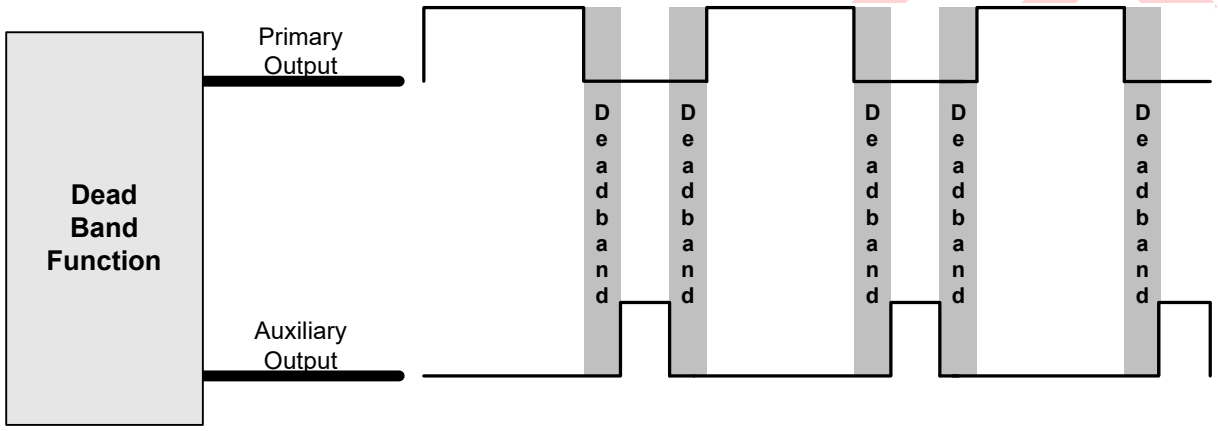

The dead band has two inputs: a PWM reference signal and a KILL signal. The PWM reference signal may be derived from one of two sources. By default, it is hardwired to be the primary output of the previous block. This previous block output is wired as an input to the 16-to-1 clock input mux. In the dead band case, as the previous block output is wired directly to the dead band reference input. If this mode is used, a PWM, or some other ***waveform*** generator, must be instantiated in the previous digital block. There is also an optional Bit Bang mode. In this mode, firmware toggles a register bit to generate a PWM reference; and therefore, the dead band may be used as a standalone block.

The KILL signal is derived from the data input signal to the block. Mode [1:0] is encoded as the Kill Type. In all cases when kill is asserted, the output is forced low immediately. Mode bits are encoded for kill options and are detailed in the following table.

Table 14-2. Dead Band Kill Options

Mode [1:0]	Description
00b	Synchronous Restart KILL mode. Internal state is reset and reference edges are ignored, until the KILL signal is negated.
01b	Disable KILL mode. Block is disabled. KILL signal must be negated and user must re-enable the block in firmware to resume operation.
10b	Asynchronous KILL mode. Outputs are low only for the duration that the KILL signal is asserted, subject to a minimum disable time between one-half to one and one-half clock cycles. Internal state is unaffected.
11b	Reserved

When the block is initially enabled, both outputs are low. After enabling, a positive or negative edge of the incoming PWM reference enables the counter. The counter counts down from the period value to terminal count. At terminal count, the counter is disabled and the selected phase is asserted high. On the opposite edge of the PWM input, the output that was high is negated low and the process is repeated with the opposite phase. This results in the generation of a two phase non-overlapping clock matching the frequency and pulse width of the incoming PWM reference, but separated by a dead time derived from the period and the input clock.

There is a deterministic relationship between the incoming PWM reference and the output phases. The positive edge of the reference causes the primary output to be asserted to '1' and the negative edge of the reference causes the auxiliary output to be asserted to '1'.

14.1.8.1 Usability Exceptions

The following are usability exceptions for the Dead Band function.

1. The Dead Band function may not be chained.
2. Programming a dead band period value of 00h is not supported. The block output is undefined under this condition.
3. If the period (of either the ***high time*** or the ***low time*** of the reference input) is less than the programmed dead time, than the associated output phase will be held low.
4. DR0 may only be read (to transfer DR0 data to DR2) when the block is disabled.
5. If the asynchronous KILL signal is being used in a given application, the output of the dead band cannot be connected directly to the input of another digital block in the same row. Since the kill is asynchronous, the digital block output must be resynchronized through a row input before using it as a digital block input.

14.1.8.2 Block Interrupt

The Dead Band block has one fixed interrupt source, which is the Phase 1 primary output clock. When the KILL signal is asserted, the interrupt follows the same behavior of the Phase 1 output with respect to the various KILL modes.

14.1.9 CRCPRS Function

A Cyclic Redundancy Check/Pseudo Random Sequence (CRCPRS) function consists of a polynomial register, a ***Linear Feedback Shift Register (LFSR)***, and a seed register. (See Figure 14-4 on page 128.) When the CRCPRS block is disabled and a ***seed value*** is written into DR2, the seed value is also loaded into DR0. When the CRCPRS is enabled, and synchronous clock and data are applied to the inputs, a CRC is computed on the ***serial*** data input stream. When the data input is forced to '0', then the block functions as a pseudo random sequencer (PRS) generator with the output data generated at the clock rate. The most significant bit (MSb) of the CRCPRS function is the primary output.

The CRCPRS has a selection of compare modes between DR0 and DR2. The default behavior of the compare is DR0==DR2. When the PRS function cycles through the seed value as one of the valid counts, the compare output is asserted high for one clock cycle. This is regarded as the epoch of the pseudo random sequence. The mode bits can be used to set other compare types. Setting Mode bit 0 to '1' causes the compare behavior to revert to DR0 ≤ DR2 or DR0 < DR2, depending upon Mode bit 1. The compare value is the auxiliary output. An interrupt is generated on compare true.

CRCPRS mode offers an optional Pass function. By setting the Pass Mode bit in the CR0 register (bit 1), the CRCPRS function is overridden. In this mode, the data input is passed transparently to the primary output and an interrupt is generated on the rising of the data input. Similarly, the CLK input is passed transparently to the auxiliary output. This can only be used to pass signals to the global outputs. If the output of a pass function is needed as an input to another digital block, it must be resynchronized through the globals and row inputs.

PRELIMINARY

Figure 14-4. CRCPRS LFSR Structure

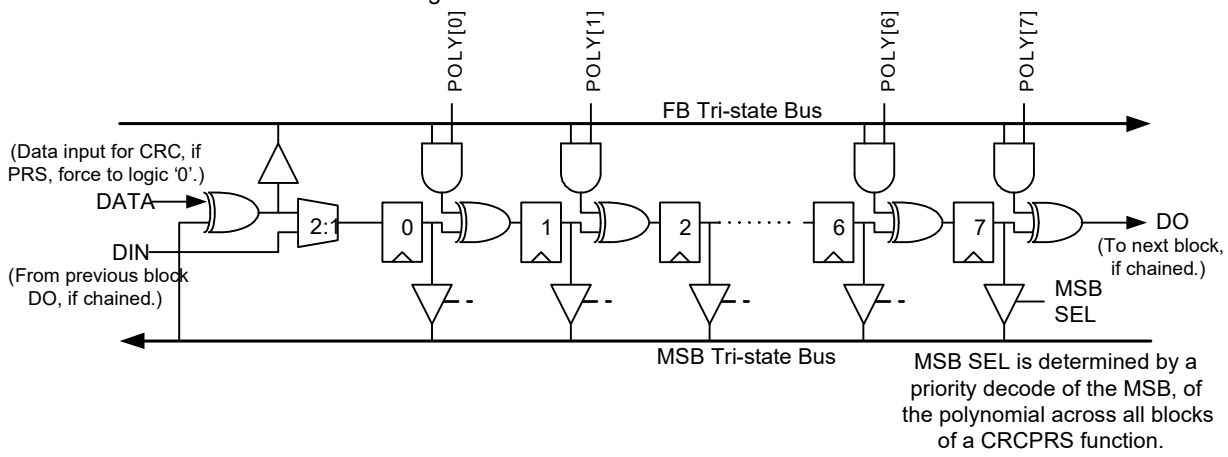

LSFR Structure

The LSFR (Linear Feedback Shift register) structure, as shown in Figure 14-4, is implemented as a modular ***shift*** register generator. The least significant block in the chain inputs the MSb and XORs it with the DATA input, in the case of CRC computation. For PRS computation, the DATA input is forced to logic 0 (by input selection); and therefore, the MSb bus is directly connected to the FB bus. In the case of a chained block, the data input (DIN) comes directly from the data output (DO) of the LFSR in the previous block. The MSb selection, derived from the priority decode of the polynomial, enables one of the tristate drivers to drive the MSb bus.

Determining the CRC Polynomial

Computation of an n-bit result is generally specified by a polynomial with n+1 terms, the last of which is X_{16}, where

$$X_0 = 1 \qquad \textbf{Equation 1}$$

As an example, the CRC-CCIT 16-bit polynomial is:

$$CRC - CCIT = X_{16} + X_{12} + X_5 + 1 \qquad \textbf{Equation 2}$$

The CRCPRS hardware assumes the presence of the X_0 term; and therefore, this polynomial can be expressed in 16 bits as 1000100000010000 or 8810h. Two consecutive digital blocks may be allocated to perform this function, with 88h as the MS block polynomial (DR1) and 10h as the LS block polynomial value.

Determining the PRS Polynomial

Generally, PRS polynomials are selected from pre-computed reference tables. It is important to note that there are two common ways to specify a PRS polynomial: simple register configuration and modular configuration. In the simple method, a ***shift register*** is implemented with a reduction XOR of the MSb and feedback taps as input into the least significant bit. In the modular method, there is an XOR operation implemented between each register bit and each tap point enables the XOR with the MSb for that given bit. The CRCPRS function implements the modular approach.

These are equivalent methods. However, there is a conversion that should be understood. If tables are specified in simple register format, then a conversion can be made to the modular format by subtracting each tap from the MS tap, as shown in the following example.

To implement a 7-bit PRS of length 127, one possible code is [7,6,4,2]s, which is in simple format. The modular format would be [7,7-6,7-4,7-2]m or [7,1,3,5]m which is equivalent to [7, 5, 3, 1]. Determining the polynomial to program is similar to the CRC example above. Set a ***binary*** bit for each tap (with bit 0 of the register corresponding to tap 1). Therefore, the code [7,5,3,1] would correspond to 01010101 or 55h.

In both the CRC and PRS cases, an appropriate seed value should be selected. All ones for PRS, or all ones or all zeros for CRC are typical values. Note that a seed value of all zeros should not be used in a PRS function, because PRS counting is inhibited by this seed.

14.1.9.1 Usability Exceptions

The following is a usability exception for the CRCPRS function.

1. The polynomial register must only be written when the block is disabled.

14.1.9.2 Block Interrupt

The CRCPRS block has one fixed interrupt source, which is the compare auxiliary output.

PRELIMINARY

14.1.10 SPI Protocol Function

The Serial Peripheral Interface (SPI) is a Motorola™ specification for implementing full-duplex synchronous serial communication between devices. The 3-wire ***protocol*** uses both edges of the clock to enable synchronous communication, without the need for stringent setup and hold requirements. Figure 14-5 shows the basic signals in a simple connection.

Figure 14-5. Basic SPI Configuration

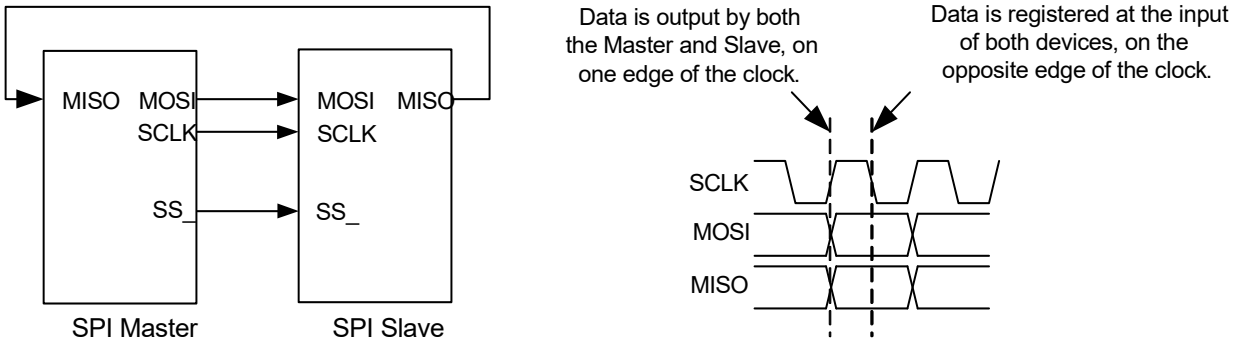

A device can be a master or slave. A master outputs clock and data to the ***slave device*** and inputs slave data. A slave device inputs clock and data from the ***master device*** and outputs data for input to the master. The master and slave together are essentially a circular shift register, where the master is generating the clocking and initiating data transfers.

A basic data transfer occurs when the master sends eight bits of data, along with eight clocks. In any transfer, both master and slave are transmitting and receiving simultaneously. If the master is only sending data, the received data from the slave is ignored. If the master wishes to receive data from the slave, the master must send dummy bytes to generate the clocking for the slave to send data back.

14.1.10.1 SPI Protocol Signal Definitions

The SPI Protocol signal definitions are located in Table 14-3. The use of the SS_ signal varies according to the capability of the slave device.

Table 14-3. SPI Protocol Signal Definitions

Name	Function	Description
MOSI	Master Out Slave In	Master data output.
MISO	Master In Slave Out	Slave data output.
SCLK	Serial Clock	Clock generated by the master.
SS_	Slave Select (active low)	This signal is provided to enable multi-slave connections to the MISO pin. The MOSI and SCLK pins can be connected to multiple slaves, and the SS_ input selects which slave will receive the input data and drive the MISO line.

OBSOLETE

14.1.11 SPI Master Function

The SPI Master (SPIM) offers SPI operating modes 0-3. By default, the MSb of the data byte is shifted out first. An additional option can be set to reverse the direction and shift the data byte out LSb first. (Refer to the timing diagrams for this function on page 149.)

When configured for SPIM, DR0 functions as a shift register, with input from the DATA input (MISO) and output to the primary output F1 (MOSI). DR1 is the TX Buffer register and DR2 is the RX Buffer register.

The SPI protocol requires data to be registered at the device input, on the opposite edge of the clock that operates the output shifter. An additional register (RXD), at the input to the DR0 shift register, has been implemented for this purpose. This register stores received data for one-half cycle, before it is clocked into the shift register.

The SPIM controls ***data transmission*** between master and slave, because it generates the bit clock for internal clocking and for clocking the SPIS. The bit clock is derived from the CLK input selection. Since the PowerPSoC system clock generators produce clocks with varying duty cycles, the SPIM divides the input CLK by two to produce a bit clock with a 50 percent duty cycle. This clock is gated, to provide the SCLK output on the auxiliary output, during byte transmissions.

There are four control bits and four status bits in the control register that provide for PowerPSoC device interfacing and synchronization.

The SPIM hardware has no support for driving the Slave Select (SS_) signal. The behavior and use of this signal is application and PowerPSoC device dependent and, if required, must be implemented in firmware.

14.1.11.1 Usability Exceptions

The following are usability exceptions for the SPI Protocol function.

1. The SPIM function may not be chained.
2. The MISO input must be resynchronized at the row inputs.
3. The DR2 (Rx Buffer) register is not writeable.

14.1.11.2 Block Interrupt

The SPIM block has a selection of two interrupt sources: Interrupt on TX Reg Empty (default) or interrupt on SPI Complete. Mode bit 1 in the function register controls the selection. These mode are discussed in detail in "SPIM Timing" on page 149.

If SPI Complete is selected as the block interrupt, the control register must be read in the interrupt routine so that this status bit is cleared; otherwise, no subsequent interrupts are generated.

14.1.12 SPI Slave Function

The SPI Slave (SPIS) offers SPI operating modes 0-3. By default, the MSb of the data byte is shifted out first. An additional option can be set to reverse the direction and shift the data byte out LSb first. (Refer to the timing diagrams for this function on page 152.)

When configured for SPI, DR0 functions as a shift register, with input from the DATA input (MOSI) and output to the primary output F1 (MISO). DR1 is the TX Buffer register and DR2 is the RX Buffer register.

The SPI protocol requires data to be registered at the device input, on the opposite edge of the clock that operates the output shifter. An additional register (RXD), at the input to the DR0 shift register, is implemented for this purpose. This register stores received data for one-half cycle before it is clocked into the shift register.

The SPIS function derives all clocking from the SCLK input (typically an external SPI Master). This means that the master must initiate all transmissions. For example, to read a byte from the SPIS, the master must send a byte.

There are four control bits and four status bits in the control register that provide for PowerPSoC device interfacing and synchronization.

In the SPIS, there is an additional data input, Slave Select (SS_), which is an ***active low*** signal. SS_ must be asserted to enable the SPIS to receive and transmit. SS_ has two high level functions: 1) To allow for the selection of a given slave in multi-slave environment, and 2) To provide additional clocking for TX data queuing in SPI modes 0 and 1.

SS_ may be controlled from an external pin through a Row Input or can be controlled by way of user firmware.

When SS_ is negated, the SPIS ignores any MOSI/SCLK input from the master. In addition, the SPIS ***state machine*** is reset, and the MISO output is forced to idle at logic 1. This allows for a wired-AND connection in a multi-slave environment. Note that if High-Z output is required when the slave is not selected, this behavior must be implemented in firmware with I/O writes to the port drive register.

PRELIMINARY

14.1.12.1 Usability Exceptions

A usability exception for the SPI Slave function.

1. The SPIS function may not be chained.

14.1.12.2 Block Interrupt

The SPIS block has a selection of two interrupt sources: Interrupt on TX Reg Empty (default) or interrupt on SPI Complete (same selection as the SPIM). Mode bit 1 in the function register controls the selection.

If SPI Complete is selected as the block interrupt, the control register must still be read in the interrupt routine so that this status bit is cleared; otherwise, no subsequent interrupts are generated.

14.1.13 Asynchronous Transmitter and Receiver Functions

The Asynchronous Transmitter and Receiver functions are illustrated in Figure 14-6.

Figure 14-6. Asynchronous Transmitter and Receiver Block Diagram

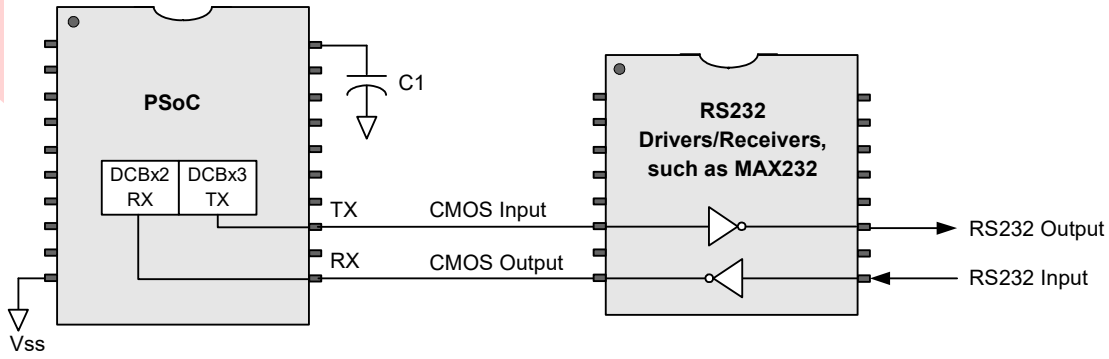

14.1.13.1 Asynchronous Transmitter Function

In the Transmitter function, DR0 functions as a shift register, with no input and with the TXD serial ***data stream*** output to the primary output F1. DR1 is a TX Buffer register and DR2 is unused in this configuration. (Refer to the timing diagrams for this function on page 155.)

Unlike SPI, which has no output latency, the TXD output has one cycle of ***latency***. This is because a mux at the output must select which bits to shift out: the shift register data, framing bits, ***parity***, or mark bits. The output of this mux is registered to remove glitches. When the block is first enabled or when it is idle, a mark bit (logic 1) is output.

The ***clock generator*** is a free running divide-by-eight circuit. Although dividing the clock is not necessary for the Transmitter function, the Receiver function does require a divide by eight for input sampling. It is also done in the Transmitter function, to allow the TX and RX functions to run off the same baud rate generator.

There are two formats supported: A 10-bit frame size including one start bit, eight data bits, and one ***stop bit*** or an 11-bit frame size including one start bit, eight data bits, one parity bit, and one stop bit.

The parity generator can be configured to output either even or odd parity on the eight data bits.

A write to the TX Buffer register (DR1) initiates a transmission and an additional byte can be buffered in this register, while transmission is in progress.

An additional feature of the Transmitter function is that a clock, generated with setup and hold time for the data bits only, is output to the auxiliary output. This allows connection to a CRC generator or other digital blocks.

14.1.13.2 Usability Exceptions

The following is a usability exception for the Transmitter function.

1. The Transmitter function may not be chained.

14.1.13.3 Block Interrupt

The Transmit block has a selection of two interrupt sources. Interrupt on TX Reg Empty (default) or interrupt on TX Complete. Mode bit 1 in the function register controls the selection.

If TX Complete is selected as the block interrupt, the control register must still be read in the interrupt routine so that this status bit is cleared; otherwise, no subsequent interrupts are generated.

14.1.13.4 Asynchronous Receiver Function

In the Receiver function, DR0 functions as the serial data shift register with RXD input from the DATA input selection. DR2 is an RX Buffer register and DR1 is unused in this con-

figuration. (Refer to the timing diagrams for this function on page 157.)

The clock generator and START detection are integrated. The clock generator is a divide by eight which, when the system is idle, is held in reset. When a START bit (logic 0) is detected on the RXD input, the reset is negated and a ***bit rate (BR)*** clock is generated, subsequently sampling the RXD input at the center of the bit time. Every subsequent START bit resynchronizes the clock generator to the incoming bit rate.

There are two formats supported: A 10-bit frame size including one start bit, eight data bits, and one stop bit or an 11-bit frame size including one start bit, eight data bits, one parity bit, and one stop bit.

The received data is an input to the parity generator. It is compared with a received parity bit, if this feature is enabled. The parity generator can be configured to output either even or odd parity on the eight data bits.

After eight bits of data are received, the byte is transferred from the DR0 shifter to the DR2 RX Buffer register.

An additional feature of the Receiver function is that input data (RXD) and the synchronized clock are passed to the primary output and auxiliary output, respectively. This allows connection to a CRC generator or other digital block.

14.1.13.5 Usability Exceptions

The following are usability exceptions for the Asynchronous Receiver function.

1. The RXD input must be resynchronized through the row inputs.
2. DR2 is a read only register.

14.1.13.6 Block Interrupt

The Receiver has one fixed interrupt source, which is the RX Reg Full status.

The RX Buffer register must always be read in the RX interrupt routine, regardless of error status, and so on., so that RX Reg Full status bit is cleared; otherwise, no subsequent interrupts are generated.

OBSOLETE

14.2 Register Definitions

The following registers are associated with the Digital Blocks and listed in address order. Note that there are two banks of registers associated with the PowerPSoC device. Bank 0 encompasses the user registers (Data and Control registers, and Interrupt Mask registers) for the device and Bank 1 encompasses the Configuration registers for the device. Both are defined below. Refer to the “Bank 0 Registers” on page 363 and the “Bank 1 Registers” on page 468 for a quick reference of PowerPSoC registers in address order.

Each register description that follows has an associated register table showing the bit structure for that register. The bits that are grayed out throughout this manual are reserved bits and are not detailed in the register descriptions that follow. Reserved bits should always be written with a value of ‘0’.

The Digital Block registers in this chapter are organized by function, as presented in Table 14-4. To reference timing diagrams associated with the digital block registers, see “Timing Diagrams” on page 143. For a complete table of digital block registers, refer to the “Summary Table of the Digital Registers” on page 106.

Data and Control Registers

The following table summarizes the Data and Control registers, by function type, for the digital blocks.

Table 14-4. Digital Block Data and Control Register Definitions

Function Type	DR0		DR1		DR2		CR0	
	Function	Access	Function	Access	Function	Access	Function	Access
Timer	Down Counter	R*	Period	W	Capture/Compare	RW	Control	RW
Counter	Down Counter	R*	Period	W	Compare	RW	Control	RW
Dead Band	Down Counter	R*	Period	W	N/A	N/A	Control	RW
CRCPRS	LFSR	R*	Polynomial	W	Seed	RW	Control	RW
SPIM	Shifter	N/A	TX Buffer	W	RX Buffer	R	Control/Status	RW**
SPIS	Shifter	N/A	TX Buffer	W	RX Buffer	R	Control/Status	RW**
TXUART	Shifter	N/A	TX Buffer	W	N/A	N/A	Control/Status	RW**
RXUART	Shifter	N/A	N/A	N/A	RX Buffer	R	Control/Status	RW**

LEGEND

* In Timer, Counter, Dead Band, and CRCPRS functions, a read of the DR0 register returns 00h and transfers DR0 to DR2.

* In the Communications functions, control bits are read/write accessible and status bits are read only accessible.

PRELIMINARY

14.2.1 DxBxxDRx Registers

Add.	Name	Bit 7	Bit 6	Bit 5	Bit 4	Bit 3	Bit 2	Bit 1	Bit 0	Access
0,xxh	DxBxxDR0	Data[7:0]								# : 00
0,xxh	DxBxxDR1	Data[7:0]								W : 00
0,xxh	DxBxxDR2	Data[7:0]								# : 00

LEGEND
Access is bit specific. Refer to the register detail for additional information.
xx An "x" after the comma in the address field indicates that there are multiple instances of the register. For an expanded address listing of these registers, refer to the "Digital Register Summary" on page 106.

The DxBxxDRx Registers are the digital blocks' Data registers.

Bits 7 to 0: Data[7:0]. The Data registers and bits presented in this section encompass the DxBxxDR0, DxBxxDR1, and DxBxxDR2 registers. They are discussed according to which bank they are located in and then detailed in the tables that follow by function type.

For additional information, refer to the Register Details chapter for the following registers:

- DxBxxDR0 register on page 374.
- DxBxxDR1 register on page 375.
- DxBxxDR2 register on page 376.

14.2.1.1 Timer Register Definitions

There are three 8-bit Data registers and a 3-bit Control register. Table 14-5 explains the meaning of the data registers in the context of timer operation. The Control register is described in section 14.2.2 DxBxxCR0 Register.

Note DR2 is not writeable when the Timer is enabled.

Table 14-5. Timer Data Register Descriptions

Name	Function	Description
DR0	Count Value	Not directly readable or writeable. During normal operation, DR0 stores the current count of a synchronous down counter. When disabled, a write to the DR1 period register is also simultaneously loaded into DR0 from the data bus. When disabled, a read of DR0 returns 00h to the data bus and transfers the contents of DR0 to DR2. This transfer only occurs in the addressed block. When enabled, a read of DR0 returns 00h to the data bus and synchronously transfers the contents of DR0 to DR2. It operates simultaneously on the byte addressed and all higher bytes in a multi-block timer. Note that when the hardware capture input is high, the read of DR0 (software capture) will be masked and will not occur. The hardware capture input must be low for a software capture to occur.
DR1	Period	Write only register. Data in this register sets the period of the count. The actual number of clocks counted is Period + 1. In the default one-half cycle Terminal Count mode (TC), a period value of 00h results in the primary output to be the inversion of the input clock. In the optional full cycle TC mode, a period of 00h gives a constant logic high on the primary output. When disabled, a write to this register also transfers the period value directly into DR0. When enabled, if the block frequency is 24 MHz or below, this register may be written to at any time, but the period will only be reloaded into DR0 in the clock following a TC. If the block frequency is 48 MHz, the Terminal Count or Compare Interrupt should be used to synchronize the new period register write; otherwise, the counter could be incorrectly loaded.
DR2	Capture/ Compare	Read write register (see **Exception** below). DR2 has multiple functions in a timer configuration. It is typically used as a capture register, but it also functions as a compare register. When enabled and a capture event occurs, the current count in DR0 is synchronously transferred into DR2. When enabled, the compare output is computed using the compare type (set in the function register mode bits) between DR0 and DR2. The result of the compare is output to the Auxiliary output. When disabled, a read of DR0 transfers the contents of DR0 into DR2 for the addressed block only. **Exception**: When enabled, DR2 is not writeable.

OBSOLETE

14.2.1.2 Counter Register Definitions

There are three 8-bit Data registers and a 2-bit Control register. Table 14-6 explains the meaning of these registers in the context of the Counter operation. Note that the descriptions of the registers are dependent on the enable/disable state of the block. This behavior is only related to the enable bit in the Control register, not the data input that provides the counter gate (unless otherwise noted).

Note DR0 may only be read (to transfer DR0 data to DR2) when the block is disabled.

Table 14-6. Counter Data Register Descriptions

Name	Function	Description
DR0	Count Value	Not directly readable or writeable. During normal operation, DR0 stores the current count of a synchronous down counter. When disabled, a write to the DR1 period register is also simultaneously loaded into DR0 from the data bus. When disabled or the data input (counter gate) is low, a read of DR0 returns 00h to the data bus and transfers the contents of DR0 to DR2. This register should not be read when the counter is enabled and counting.
DR1	Period	Write only register. Data in this register sets the period of the count. The actual number of clocks counted is Period + 1. A period of 00h gives a constant logic high on the auxiliary output. When disabled, a write to this register also transfers the period value directly into DR0. When enabled, if the block frequency is 24 MHz or below, this register may be written to at any time, but the period will only be reloaded into DR0 in the clock following a TC. If the block frequency is 48 MHz, the Terminal Count or Compare Interrupt should be used to synchronize the new period register write; otherwise, the counter could be incorrectly loaded.
DR2	Compare	Read write register. DR2 functions as a Compare register. When enabled, the compare output is computed using the compare type (set in the function register mode bits) between DR0 and DR2. The result of the compare is output to the primary output. When disabled or the data input (counter gate) is low, a read of DR0 will transfer the contents of DR0 into DR2. DR2 may be written to when the function is enabled or disabled.

14.2.1.3 Dead Band Register Definitions

There are three 8-bit Data registers and a 3-bit Control register. Table 14-7 explains the meaning of these registers in the context of Dead Band operation.

Note DR0 may only be read (to transfer DR0 data to DR2) when the block is disabled.

Table 14-7. Dead Band Register Descriptions

Name	Function	Description
DR0	Count Value	Not directly readable or writeable. During normal operation, DR0 stores the current count of a synchronous down counter. When disabled, a write to the DR1 period register is also simultaneously loaded into DR0 from the data bus. When disabled, a read of DR0 returns 00h to the data bus and transfers the contents of DR0 to DR2.
DR1	Period	Write only register. Data in this register sets the period of the dead band count. The actual number of clocks counted is Period + 1. The minimum period value is 00h, which sets a dead band time of one clock. When disabled, a write to this register also transfers the period value directly into DR0. When enabled, if the block frequency is 24 MHz or below, this register may be written to at any time, but the period will only be reloaded into DR0 in the clock following a Terminal Count (TC). If the block frequency is 48 MHz, the Terminal Count or Compare Interrupt should be used to synchronize the new period register write; otherwise, the counter could be incorrectly loaded.
DR2	Buffer	When disabled, a read of DR0 transfers the contents of DR0 into DR2.

14.2.1.4 CRCPRS Register Definitions

There are three 8-bit Data registers and one 2-bit Control register. Table 14-8 explains the meaning of these registers in the context of CRCPRS operation. Note that in the CRCPRS function a write to the DR2 Seed register is also loaded simultaneously into DR0.

Table 14-8. CRCPRS Register Descriptions

Name	Function	Description
DR0	LFSR	Not directly readable or writeable. During normal operation, DR0 stores the state of a synchronous Linear Feedback Shift register. When disabled, a write to the DR2 Seed register is also simultaneously loaded into DR0 from the data bus. When disabled, a read of DR0 returns 00h to the data bus and transfers the contents of DR0 to DR2. This register should not be read while the block is enabled.
DR1	Polynomial	Write only register. Data in this register sets the polynomial for the CRC or PRS function. **Exception**: This register must only be written when the block is disabled.
DR2	Seed/Residue	Read write register. DR2 functions as a Seed and Residue register. When disabled, a write to this register also transfers the seed value directly into DR0. When enabled, DR2 may be written to at any time. The value written will be used in the Compare function. When enabled, the compare output is computed using the compare type (set in the function register mode bits) between DR0 and DR2. The result of the compare is output to the auxiliary output. When disabled, a read of DR0 will transfer the contents of DR0 into DR2. This feature can be used to read out the residue, after a CRC operation is complete.

14.2.1.5 SPI Master Register Definitions

There are three 8-bit Data registers and one 8-bit Control/Status register. Table 14-9 explains the meaning of these registers in the context of SPIM operation.

Table 14-9. SPIM Data Register Descriptions

Name	Function	Description
DR0	Shifter	Not readable or writeable. During normal operation, DR0 implements a Shift register for shifting serial data.
DR1	TX Buffer	Write only register. If no transmission is in progress and this register is written to, the data from this register (DR1) is loaded into the Shift register (DR0), on the following clock edge, and a transmission is initiated. If a transmission is currently in progress, this register serves as a buffer for TX data. This register should only be written to when TX Reg Empty status is set, and this write clears the TX Reg Empty status bit in the Control register. When the data is transferred from this register (DR1) to the Shift register (DR0), then TX Reg Empty status is set.
DR2	RX Buffer	Read only register. When a byte transmission/reception is complete, the data in the shifter (DR0) is transferred into the RX Buffer register and RX Reg Full status in the Control register is set. A read from this register (DR2) clears the RX Reg Full status bit in the Control register.

14.2.1.6 SPI Slave Register Definitions

There are three 8-bit Data registers and one 8-bit Control/Status register. Table 14-10 explains the meaning of these registers in the context of SPIS operation.

Table 14-10. SPIS Data Register Descriptions

Name	Function	Description
DR0	Shifter	Not readable or writeable. During normal operation, DR0 implements a Shift register for shifting serial data.
DR1	TX Buffer	Write only register. This register should only be written to when TX Reg Empty status is set and the write clears the TX Reg Empty status bit in the Control register. When the data is transferred from this register (DR1) to the Shift register (DR0), then TX Reg Empty status is set.
DR2	RX Buffer	Read only register. When a byte transmission/reception is complete, the data in the shifter (DR0) is transferred into the RX Buffer register and RX Reg Full status in the Control (CR0) register is set. A read from this register (DR2) clears the RX Reg Full status bit in the Control register.

14.2.1.7 Transmitter Register Definitions

There are three 8-bit Data registers and one 5-bit Control/Status register. Table 14-11 explains the meaning of these registers in the context of Transmitter operation.

Table 14-11. Transmitter Data Register Descriptions

Name	Function	Description
DR0	Shifter	Not readable or writeable. During normal operation, DR0 implements a shift register for shifting out serial data.
DR1	TX Buffer	Write only register. If no transmission is in progress and this register is written to, subject to the setup time requirement, the data from this register (DR1) is loaded into the Shift register (DR0) on the following clock edge and a transmission is initiated. If a transmission is currently in progress, this register serves as a buffer for TX data. This register should only be written to when TX Reg Empty status is set and this write clears the TX Reg Empty status bit in the Control (CR0) register. When the data is transferred from this register (DR1) to the Shift register (DR0), then TX Reg Empty status is set.
DR2	NA	Not used in this function.

14.2.1.8 Receiver Register Definitions

There are three 8-bit Data registers and one 8-bit Control/Status register. Table 14-12 explains the meaning of these registers in the context of Receiver operation.

Table 14-12. Receiver Data Register Descriptions

Name	Function	Description
DR0	Shifter	Not readable or writeable. During normal operation, DR0 implements a Shift register for shifting in serial data from the RXD input.
DR1	NA	Not used in this function.
DR2	RX Buffer	Read only register. After eight bits of data are received, the contents of the shifter (DR0) is transferred into the RX Buffer register and the RX Reg Full status is set. The RX Reg Full status bit in the Control register is cleared when this register is read.

OBSOLETE

14.2.2 DxBxxCR0 Register

Add.	Name	Bit 7	Bit 6	Bit 5	Bit 4	Bit 3	Bit 2	Bit 1	Bit 0	Access
0,xxh	DxBxxCR0	Function control/status bits for selected function[6:0]							Enable	# : 00

LEGEND
Access is bit specific. Refer to the register detail for additional information.
xx An "x" after the comma in the address field indicates that there are multiple instances of the register. For an expanded address listing of these registers, refer to the "Digital Register Summary" on page 106.

The DxBxxCR0 Registers are the digital blocks' Control registers.

Bits 7 to 1: Function Control/Status[6:0]. The bits for this register are described by function in Table 14-13. Refer to the "Summary Table of the Digital Registers" on page 106 for a complete description of bit functionality.

Bit 0: Enable. This bit is used to synchronously enable or disable the programmed function.

For additional information, refer to the DxBxxCR0 (Timer Control) register on page 377.

Table 14-13. DxBxxCR0 Control Register Descriptions

Function	Description
Timer	There are three bits in the Control (CR0) register: one for enabling the block, one for setting the optional interrupt on capture, and one to select between one-half and a full clock for Terminal Count (TC) output.
Counter	One bit enable only.
Dead Band	There are three bits in the Control (CR0) register: one bit for enabling the block, and two bits to enable and control Dead Band Bit Bang mode. When Bit Bang mode is enabled, the output of this register is substituted for the PWM reference. This register may be toggled by user firmware, to generate PHI1 and PHI2 output clock with the programmed dead time. The options for Bit Bang mode are as follows: 0 Function uses the previous clock primary output as the input reference. 1 Function uses the Bit Bang Clock register as the input reference.
CRCPRS	There are two bits are used to enable operation.
SPIM	The SPI Control (CR0) register contains both control and status bits. There are four control bits that are read/write: Enable, Clock Phase and Clock Polarity to set the mode, and LSb First which controls bit ordering. There are two read only status bits: Overrun and SPI Complete. There are two additional read only status bits to indicate TX and RX Buffer status.
SPIS	The SPI Control (CR0) register contains both control and status bits. There are four control bits that are read/write: Enable, Clock Phase and Clock Polarity to set the mode, and LSb First which controls bit ordering. There are two read only status bits: Overrun and SPI Complete. There are two additional read only status bits to indicate TX and RX Buffer status.
TXUART	The Transmitter Control (CR0) register contains three control bits and two status bits. The control bits are Enable, Parity Enable, and Parity Type, and have read/write access. The status bits, TX Reg Empty and TX Complete, are read only.
RXUART	The Receiver Control (CR0) register contains both control and status bits. The three control bits are read/write: Enable, Parity Enable, and Parity Type. There are five read only status bits: RX Reg Full, RX Active, Framing Error, Overrun, and Parity Error.

OBSOLETE

Interrupt Mask Registers

The following registers are the interrupt mask registers for the digital blocks.

14.2.3 INT_MSK1 Register

Add.	Name	Bit 7	Bit 6	Bit 5	Bit 4	Bit 3	Bit 2	Bit 1	Bit 0	Access
0,E1h	INT_MSK1	DCB13	DCB12	DBB11	DBB10	DCB03	DCB02	DBB01	DBB00	RW : 00

The Interrupt Mask Register 1 (INT_MSK1) is used to enable the individual sources' ability to create pending interrupts for digital blocks.

Depending on the digital row configuration of your PowerPSoC device, some bits may not be available in the INT_MSK1 register.

Bit 7: DCB13. Digital communications block interrupt enable for row 1 block 3.

Bit 6: DCB12. Digital communications block interrupt enable for row 1 block 2.

Bit 5: DBB11. Digital basic block interrupt enable for row 1 block 1.

Bit 4: DBB10. Digital basic block interrupt enable for row 1 block 0.

Bit 3: DCB03. Digital communications block interrupt enable for row 0 block 3.

Bit 2: DCB02. Digital communications block interrupt enable for row 0 block 2.

Bit 1: DBB01. Digital basic block interrupt enable for row 0 block 1.

Bit 0: DBB00. Digital basic block interrupt enable for row 0 block 0.

For additional information, refer to the INT_MSK1 register on page 455.

OBSOLETE

Configuration Registers

The configuration block contains 3 registers: Function (DxBxxFN), Input (DxBxxIN), and Output (DxBxxOU). The values in these registers should not be changed while the block is enabled. Note that the Digital Block Configuration registers are all located in bank 1 of the PowerPSoC device's memory map.

14.2.4 DxBxxFN Registers

Add.	Name	Bit 7	Bit 6	Bit 5	Bit 4	Bit 3	Bit 2	Bit 1	Bit 0	Access
1,xxh	DxBxxFN	Data Invert	BCEN	End Single	Mode[1:0]		Function[2:0]			RW : 00

LEGEND
xx An "x" after the comma in the address field indicates that there are multiple instances of the register. For an expanded address listing of these registers, refer to the "Digital Register Summary" on page 106.

The Digital Basic/Communications Type B Block Function Registers (DxBxxFN) contain the primary Mode and Function bits that determine the function of the block.

All bits in these registers are common to all functions, except those specified in Table 14-15.

Bit 7: Data Invert. This bit inverts the selected data input.

Bit 6: BCEN. This bit enables the primary output of the block, to drive the row broadcast block. The BCEN bit is set independently in each block; and therefore, care must be taken to ensure that only one BCEN bit, in a given row, is enabled. However, if any of the blocks in a given row have the BCEN bit set, the input that allows the broadcast net from other rows to drive the given row's broadcast net is disabled (see Figure 13-2 on page 116).

Bit 5: End Single. This bit is used to indicate the last or most significant block in a chainable function. This bit must also be set if the chainable function only consists of a single block.

Bits 4 and 3: Mode[1:0]. The mode bits select the options available for the selected function. These bits should only be changed when the block is disabled.

Bits 2 to 0: Function[2:0]. The function bits configure the block into one of the available block functions (six for the Comm block, four for the Basic block).

For additional information, refer to the DxBxxFN register on page 472.

Table 14-14. DxBxxFN Function Registers

[7]: Data Invert	1 == Invert block's data input 0 == Do not invert block's data input
[6]: BCEN	1 == Enable 0 == Disable
[5]: End Single	1 == Block is not chained or is at the end of a chain 0 == Block is at the start of or in the middle of a chain
[4:3]: Mode	Function specific
[2:0]: Function	000b: Timer 001b: Counter 010b: CRCPRS 011b: Reserved 100b: Dead band for PWM 101b: UART (DCBxx blocks only) 110b: SPI (DCBxx blocks only) 111b: Reserved

Table 14-15. Digital Block Configuration Register Functional Descriptions

Function	Description
Timer	The mode bits in the Timer block control the Interrupt Type and the Compare Type.
Counter	The mode bits in the Counter block control the Interrupt Type and the Compare Type (same as the Timer function).
Dead Band	The mode bits are encoded as the kill type. See the table titled "Dead Band Kill Options" on page 127 for an explanation of Kill options.
CRCPRS	The mode bits are encoded to determine the Compare type.
SPIM	Mode bit 1 selects interrupt type. Mode bit 0 selects master or slave (for SPIM, it is '0').
SPIS	Mode bit 1 selects interrupt type. Mode bit 0 selects master or slave (for SPIS, it is '1').
TXUART	Mode bit 0 selects between Transmitter and Receiver (in this case Mode bit 0 is set to '1' for TX) and Mode bit 1 selects the interrupt type.
RXUART	Mode bit 0 selects between Transmitter and Receiver (in this case Mode bit 0 is set to '0' for RX) and Mode bit 1 selects the interrupt type.

OBSOLETE

14.2.5 DxBxxIN Registers

Add.	Name	Bit 7	Bit 6	Bit 5	Bit 4	Bit 3	Bit 2	Bit 1	Bit 0	Access
1,xxh	DxBxxIN	Data Input[3:0]				Clock Input[3:0]				RW : 00

LEGEND
xx An "x" after the comma in the address field indicates that there are multiple instances of the register. For an expanded address listing of these registers, refer to the "Digital Register Summary" on page 106.

The Digital Basic/Communications Type B Block Input Registers (DxBxxIN) are used to select the data and clock inputs.

These registers are common to all functional types, except the SPIS. The SPIS is unique in that it has three function inputs and one function output defined. Refer to the DxBxxOU registers.

The input registers are eight bits and consist of two 4-bit fields to control each of the 16-to-1 Clock and Data input muxes. The meaning of these fields depends on the external clock and data connections, which is context specific. See Table 14-16.

Bits 7 to 4:Data Input[3:0]. These bits control the data input.

Bits 3 to 0: Clock Input[3:0]. These bits control the clock input.

Table 14-16. Digital Block Input Definitions

Function	Inputs		
	DATA	CLK	Auxiliary
Timer	Capture	CLK	N/A
Counter	Enable	CLK	N/A
Dead Band	Kill	CLK	Reference *
CRCPRS	Serial Data **	CLK	N/A
SPIM	MISO	CLK	N/A
SPIS	MOSI	SCLK	SS_
Transmitter	N/A	8X Baud CLK	N/A
Receiver	RXD	8X Baud CLK	N/A

* The Dead Band reference input does not use the auxiliary input mux. It is hardwired to be the primary output of the previous block.

** For CRC computation, the input data is a serial data stream synchronized to the clock. For PRS mode, this input should be forced to logic 0.

For additional information, refer to the DxBxxIN register on page 474.

14.2.6 DxBxxOU Registers

Add.	Name	Bit 7	Bit 6	Bit 5	Bit 4	Bit 3	Bit 2	Bit 1	Bit 0	Access
1,xxh	DxBxxOU	AUXCLK		AUXEN	AUX IO Select[1:0]		OUTEN	Output Select[1:0]		RW : 00

LEGEND
xx An "x" after the comma in the address field indicates that there are multiple instances of the register. For an expanded address listing of these registers, refer to the "Digital Register Summary" on page 106.

The Digital Basic/Communications Type B Block Output Registers (DxBxxOU) are used to control the connection of digital block outputs to the available row interconnect and control clock resynchronization.

When the selected function is SPI Slave (SPIS), the AUXEN and AUX I/O bits change meaning, and select the input source and control for the Slave Select (SS_) signal.

The Digital Block Output register is common to all functional types, except the SPIS. The SPIS function is unique in that it has three function inputs and one function output defined. When the Aux I/O Enable bit is '0', the Aux I/O Select bits are used to select one of four inputs from the auxiliary data input mux to drive the SS_ input. Alternatively, when the Aux I/O Enable bit is a '1', the SS_ signal is driven directly from the value of the Aux I/O Select[0] bit. Thus, the SS_ input can be controlled in firmware, eliminating the need to use an additional GPIO pin for this purpose. Regardless of how the SS_ bit is configured, a SPIS block has the auxiliary row output drivers forced off; and therefore, the auxiliary output is not available in this block.

The following table enumerates the Primary and Auxiliary outputs that are defined for a given block function. Most functions have two outputs defined (the exception is the SPI Slave, which has only one). One or both of these outputs can optionally be enabled for output. When output, these signals can be routed to other block inputs through row or global interconnect, or output to chip pins.

OBSOLETE

Table 14-17. Digital Block Output Definitions

Function	Outputs		
	Primary	Auxiliary	Interrupt
Timer	Terminal Count	Compare	Terminal Count or Compare
Counter	Compare	Terminal Count	Terminal Count or Compare
Dead Band	Phase 1	Phase 2	Phase 1
CRCPRS	MSB	Compare	Compare
SPIM	MOSI	SCLK	TX Reg Empty or SPI Complete
SPIS	MISO	N/A **	TX Reg Empty or SPI Complete
Transmitter	TXD	SCLK *	TX Reg Empty or TX Compete
Receiver	RXD	SCLK *	RX Reg Full

* The UART blocks generate an SPI mode 3 style clock that is only active during the data bits of a received or transmitted byte.

** In the SPIS, the field that is used to select the auxiliary output is used to control the auxiliary input to select the SS_.

Bits 7 and 6: AUXCLK. All digital block clock inputs must be resynchronized. The digital blocks have numerous selections for clocking. In addition to the system clocks such as VC1, VC2, and VC3, clocks generated by other digital blocks may be selected through row or global interconnect. To maintain the integrity of block timing, all clocks are resynchronized at the input to the digital block.

The two AUXCLK bits are used to enable the input clock resynchronization. When enabled, the input clock is resynchronized to the selected system clock, which occurs after the 16-to-1 multiplexing. The rules for selecting the value for this register are as follows:

- If the input clock is based on SYSCLK (for example, VC1, VC2, VC3 based on SYSCLK) or the output of other blocks whose clock source is based on SYSCLK, sync to SYSCLK.
- If the input clock is based on SYSCLKX2 (for example, VC3 based on SYSCLKX2) or another digital block clocked by SYSCLKX2, or a SYSCLKX2 based clock, sync to SYSCLKX2.
- If you want to clock the block at 24 MHz (SYSCLK), choose SYSCLK direct in the resynchronized bits (the 16-to-1 input clock selection is ignored).
- If you want to clock the block at 48 MHz (SYSCLKX2), choose SYSCLKX2 as the clock input selection and leave the resynchronized bits in bypass mode.

The following table summarizes the available selections of the AUXCLK bits.

Table 14-18. AUXCLK Bit Selections

Code	Description	Usage
00	Bypass	Use this selection only when SYSCLKX2 (48 MHz) is selected by the 16-to-1 clock multiplexer (see the DxBxxIN register).
01	Resynchronize to SYSCLK (24 MHz)	This is a typical selection. Use this setting for any SYSCLK-based clock: VC1, VC2, VC3 driven by SYSCLK, digital blocks with SYSCLK based source clocks, broadcast bus with source based on SYSCLK, row input and row outputs with source based on SYSCLK.
10	Resynchronize to SYSCLKX2 (48 MHz)	Use this setting for any SYSCLKX2-based clock: VC3 driven by SYSCLKX2, digital blocks with SYSCLKX2 based source clocks, broadcast bus with source based on SYSCLKX2, row input and row outputs with source based on SYSCLKX2.
11	SYSCLK Direct	Use this setting to clock the block directly using SYSCLK. Note that this setting is not strictly related to clock resynchronization: but since SYSCLK cannot resynchronize itself, it allows a direct skew controlled SYSCLK source.

Note Selecting VC1/1 or VC2/1 (when VC1 is 1), or VC3/1 when the input is SYSCLK, or SYSCLKX2 is not allowed.

Bit 5: AUXEN. The AUXEN bit enables the Auxiliary output to be driven onto the selected row output. If the selected function is SPI Slave, the meaning of this bit is different. The SPI Slave does not have a defined Auxiliary output, so this bit is used, in conjunction with the AUX I/O Select bits to control the Slave Select input signal (SS_). When this bit is set, the SS_ input is forced active; and therefore, ***routing*** SS_ from an input pin is unnecessary.

Bits 4 and 3: AUX IO Select[1:0]. These two bits select one (out of the 4) row outputs to drive the Auxiliary output onto. In SPI Slave mode, these bits are used in conjunction with the AUXEN bit to control the Slave Select (SS_) signal. In this mode, these two bits are used to select one of four row inputs for use as SS_. If no SS_ is required in a given application, the AUXEN bit can be used to force the SS_ input active; and therefore, routing SS_ in through a Row Input would not be required.

Bit 2: OUTEN. This bit enables the Primary output to be driven onto the selected row output.

Output Select[1:0]. These two bits indicate which of the four row outputs the Primary output will be driven onto.

For additional information, refer to the DxBxxOU register on page 476.

PROFILE

14.3 Timing Diagrams

The timing diagrams in this section are presented according to their functionality and are in the following order.

- "Timer Timing" on page 143
- "Counter Timing" on page 145
- "Dead Band Timing" on page 145
- "CRCPRS Timing" on page 148
- "SPI Mode Timing" on page 148
- "SPIM Timing" on page 149
- "SPIS Timing" on page 152
- "Transmitter Timing" on page 155
- "Receiver Timing" on page 157

14.3.1 Timer Timing

Enable/Disable Operation. When the block is disabled, the clock is immediately gated low. All outputs are gated low, including the interrupt output. All internal state is reset to its configuration-specific reset state, except for DR0, DR1, and DR2 which are unaffected.

Terminal Count/Compare Operation. In the clock cycle following the count of 00h, the Terminal Count (TC) output is asserted. It is one-half cycle or a full cycle depending on the TC Pulse Width mode, as set in the block Control register. If this block stands alone or is the least significant block in a chain, the Carry Out (CO) signal is also asserted. If the period is set to 00h and the TC Pulse Width mode is one-half cycle, the output is the inversion of the input clock. The Compare (CMP) output will be asserted in the cycle following the compare true and will be negated one cycle after compare false.

Multi-Block Terminal Count/Compare Operation. When timers are chained, the CO signal of a given block becomes the Carry In (CI) of the next most significant block in the chain. In a chained timer, the CO output indicates that block and all lower blocks are at 00h count. The CO is set up to the next positive edge of the clock, to enable the next higher block to count once for every Terminal Count (TC) of all lower blocks.

The terminal count out of a given block becomes the terminal count in of the next least significant block in the chain. The terminal count output indicates that the block and all higher blocks are at 00h count. The terminal count in/terminal count out chaining signals provide a way for the lower blocks to know when the upper blocks are at TC. Reload occurs when all blocks are at TC, which can be determined by CI, terminal count in, and the block zero detect. Example timing for a three block timer is shown in Figure 14-7.

The compare circuit compares registers DR0 ≤ DR2. (When Mode[1] = 1, the comparison is DR0 < DR2.)

Each block has an internal compare condition (DR0 compared to DR2), a chaining signal to the next block called CMPO, and the chaining signal from the previous block called CMPI. In any given block of a timer, the CMPO is used to generate the auxiliary output (primary output in the counter) with a one cycle clock delay.

CMPO is generated from a combination of the internal compare condition and the CMPI input using the following rules:

1. For any given block, if DR0 < DR2, the CMPO condition is unconditionally asserted.
2. For any given block, if DR0 == DR2, CMPO is asserted only if the CMPI input to that block is asserted.
3. If the block is a start block, the effective CMPI depends on the compare type. If it is DR0 ≤ DR2, the effective CMPI input is '1'. If it is DR0 < DR2, the effective input is '0'.

Capture Operation. In the timer implementation, a rising edge of the data input or a CPU read of DR0 triggers a synchronous capture event. The result of this is to generate a latch enable to DR2 that loads the current count from DR0 into DR2. The latch enable signal is synchronized in such a way that it is not closing near an edge on which the count is changing.

OBSOLETE

A limitation is that capture will not work with the block clock of 48 MHz. (A fundamental limitation to Timer Capture operation is the fact the GPIO inputs are currently synchronized to the 24 MHz system clock).

Figure 14-7. Multi-Block Timing

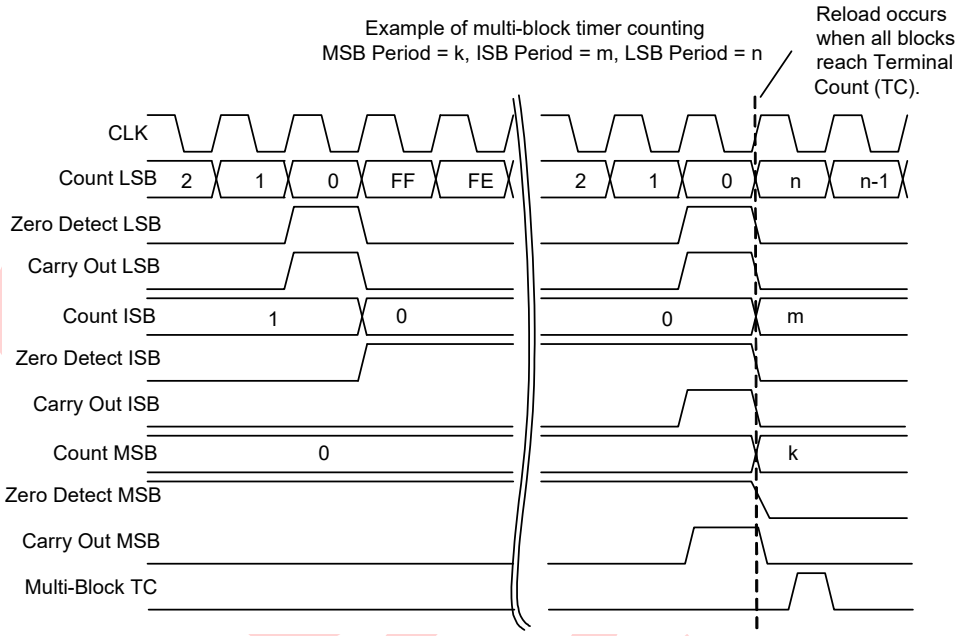

OBSOLETE

14.3.2 Counter Timing

Enable/Disable Operation. See Timer Enable/Disable Operation ("Timer Function" on page 125).

Terminal Count/Compare Operation. See Timer Terminal Count/Compare Operation ("Timer Function" on page 125).

Multi-Block Operation. See Timer Multi-Block Terminal Count/Compare Operation ("Timer Function" on page 125).

Gate (Enable) Operation. The data input controls the counter enable. The transition on this enable must have at least one 24 MHz cycle of setup time to the block clock. This will be ensured if internal or synchronized external inputs are used.

As shown in Figure 14-8, when the data input is negated (counting is disabled) and the count is 00h, the TC output stays low. When the data input goes high again, the TC occurs on the following input clock. When the block is disabled, the clock is immediately gated low. All internal state is reset, except for DR0, DR1, and DR2, which are unaffected.

Figure 14-8. Counter Terminal Count Timing with Gate Disable

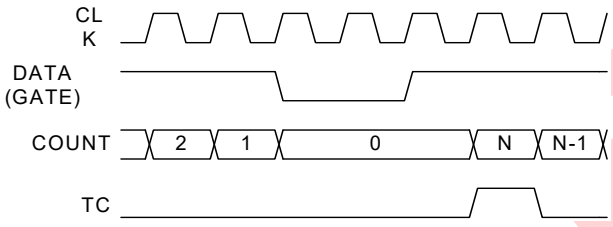

14.3.3 Dead Band Timing

Enable/Disable Operation. Initially both outputs are low. There are no critical timing requirements for enabling the block because dead band processing does not start until the first incoming positive or negative reference edge. In typical operation, it is recommended that the dead band block be enabled first, then the Pulse Width Modulator (PWM) generator block.

When the block is disabled, the clock is immediately gated low. All outputs are gated low, including the interrupt output. All internal state is reset to its configuration-specific reset state, except for DR0, DR1, and DR2 which are unaffected.

Normal Operation. Figure 14-9 shows typical dead band timing. The incoming reference edge can occur up to one 24 MHz system clock before the edge of the block clock. On the edge of the block clock, the currently asserted output is negated and the dead band counter is enabled. After Period + 1 clocks, the phase associated with the current state of the PWM reference is asserted (Reference High = Phase 1, Reference Low = Phase 2). The minimum dead time occurs with a period value of 00h and that dead time is one clock cycle.

Figure 14-9. Basic Dead Band Timing

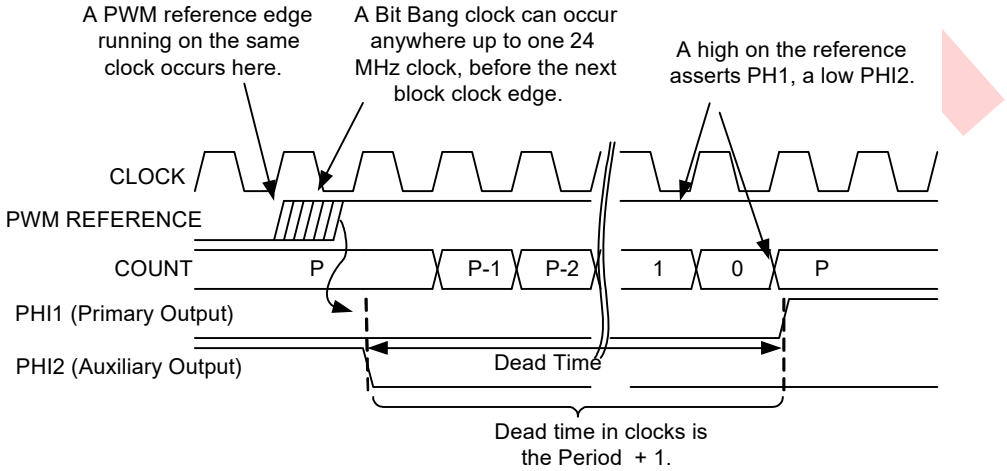

PRELIMINARY

14.3.3.1 Changing the PWM Duty Cycle

Under normal circumstances, the dead band period is less than the minimum PWM high or low time. As an example, consider Figure 14-10 where the low of the PWM is four clocks, the dead band period is two clocks, and the high time of the PHI2 is two clocks.

Figure 14-10. DB High Time is PWM Width Minus DB Period

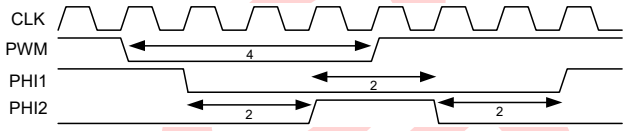

Figure 14-11 illustrates the reduction of the width of the PWM low time by one clock (to three clocks). The dead band period remains the same, but the high time for PHI2 is reduced by one clock (to one clock). Of course the opposite phase, PHI1, increases in length by one clock.

Figure 14-11. DB High Time is Reduced as PWM Width is Reduced

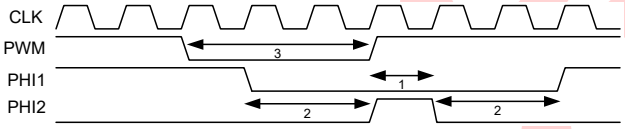

If the width of the PWM low time is reduced to a point where it is equal to the dead band period, the corresponding phase, PHI2, disappears altogether. Note that after the rising edge of the PWM, the opposite phase still has the programmed dead band. Figure 14-12 shows an example where the dead band period is two and the PWM width is two. In this case, the high time of PHI2 is zero clocks. Note that the Phase 1 dead band time is still two clocks.

Figure 14-12. PWM Width Equal to Dead Band Period

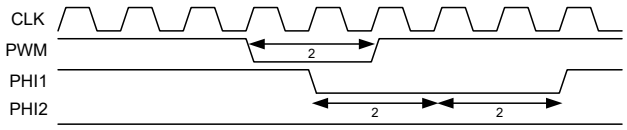

In the case where the dead band period is greater than the high or low of the PWM reference, the output of the associated phase will not be asserted high.

14.3.3.2 Kill Operation

It is assumed that the KILL input will not be synchronized at the row input. (This is not a requirement; however, if synchronized, the KILL operation will have up to two 24 MHz clock cycles latency which is undesirable.) To support the restart modes, the negation of KILL is internally (in the block) synchronized to the 24 MHz system clock.

There are three KILL modes supported. In all cases, the KILL signal asynchronously forces the outputs to logic 0. The differences in the modes come from how dead band processing is restarted.

1. **Synchronous Restart Mode**: When KILL is asserted high, the internal state is held in reset and the initial dead band period is reloaded into the counter. While KILL is held high, incoming PWM reference edges are ignored. When KILL is negated, the next incoming PWM reference edge restarts dead band processing. See Figure 14-13.
2. **Asynchronous Restart Mode**: When KILL is asserted high, the internal state is not affected. When KILL is negated, the outputs are restored, subject to a minimum disable time between one-half and one and one-half clock cycle. See Figure 14-14.
3. **Disable Mode**: There is no specific timing associated with Disable mode. The block is disabled and the user must re-enable the function in firmware to continue processing.

OBSOLETE

Figure 14-13. Synchronous Restart KILL Mode

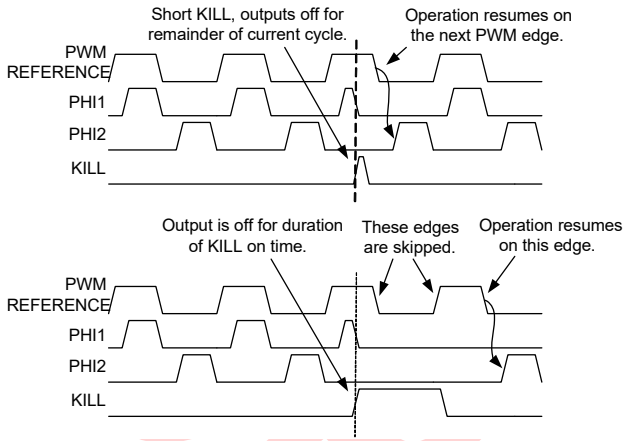

Figure 14-14. Asynchronous Restart Kill Mode

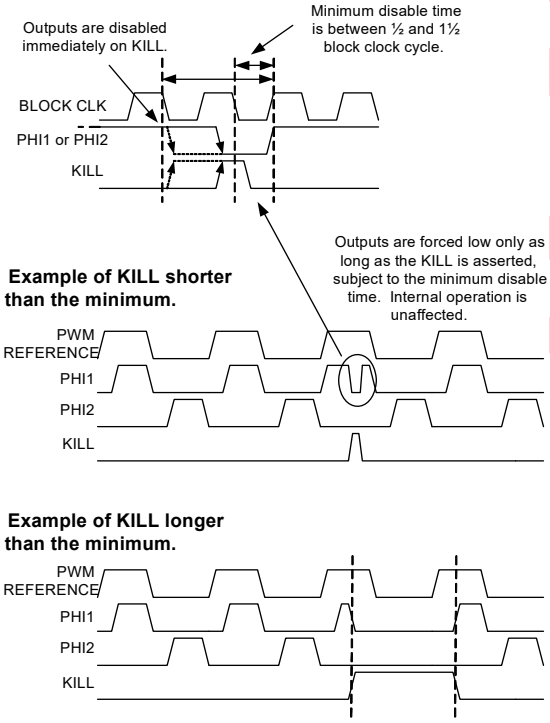

OBSOLETE

14.3.4 CRCPRS Timing

Enable/Disable Operation. Same as Timer Enable/Disable Operation (“Timer Timing” on page 143)

When the block is disabled, the clock is immediately gated low. All outputs are gated low, including the interrupt output. All internal state is reset to its configuration-specific reset state, except for DR0, DR1, and DR2 which are unaffected.

14.3.5 SPI Mode Timing

Figure 14-15 shows the SPI modes, which are typically defined as 0,1, 2, or 3. These mode numbers are an encoding of two control bits: Clock Phase and Clock Polarity.

Clock phase indicates the relationship of the clock to the data. When the clock phase is '0', it means that the data is registered as an input on the leading edge of the clock and the next data is output on the trailing edge of the clock. When the clock phase is '1', it means that the next data is output on the leading edge of the clock and that data is registered as an input on the trailing edge of the clock.

Clock polarity controls clock inversion. When clock polarity is set to '1', the clock ***idle state*** is high.

Figure 14-15. SPI Mode Timing

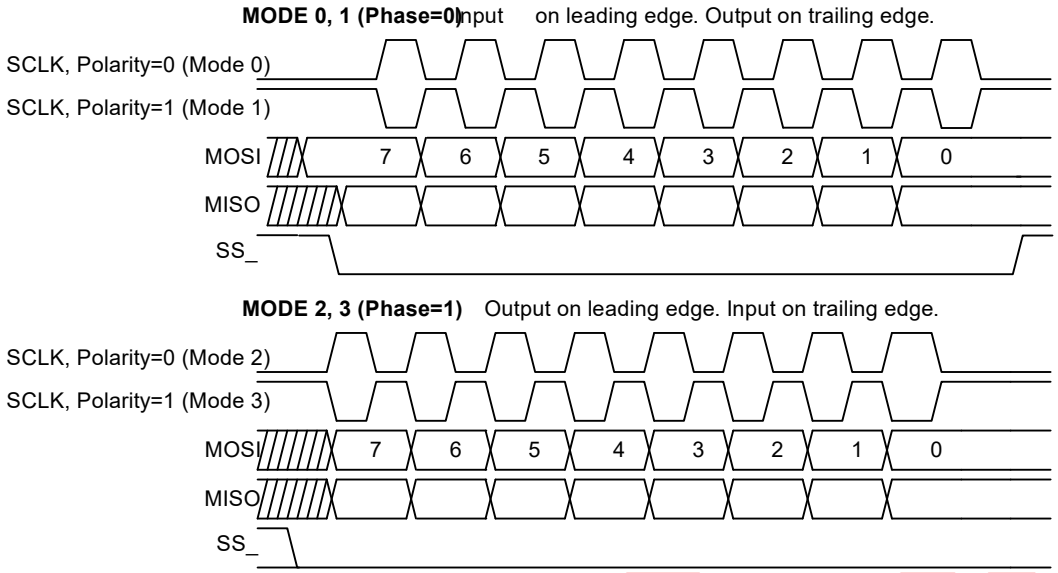

OBSOLETE

14.3.6 SPIM Timing

Enable/Disable Operation. As soon as the block is configured for SPIM, the primary output is the MSb or LSb of the Shift register, depending on the LSb First configuration in bit 7 of the Control register. The auxiliary output is '1' or '0' depending on the idle clock state of the SPI mode. This is the idle state.

When the SPIM is enabled, the internal reset is released on the divide-by-2 flip-flop and on the next positive edge of the selected input clock. This 1-bit divider transitions to a '1' and remains free-running thereafter.

When the block is disabled, the SCLK and MOSI outputs revert to their idle state. All internal state is reset (including CR0 status) to its configuration-specific reset state, except for DR0, DR1, and DR2 which are unaffected.

Normal Operation. Typical timing for a SPIM transfer is shown in Figure 14-16 and Figure 14-17. The user initially writes a byte to transmit when TX Reg Empty status is true. If no transmission is currently in progress, the data is loaded into the shifter and the transmission is initiated. The TX Reg Empty status is asserted again and the user is allowed to write the next byte to be transmitted to the TX Buffer register. After the last bit is output, if TX Buffer data is available with one-half clock setup time to the next clock, a new byte transmission will be initiated. A SPIM block receives a byte at the same time that it sends one. The SPI Complete or RX Reg Full can be used to determine when the input byte has been received.

Figure 14-16. Typical SPIM Timing in Mode 0 and 1

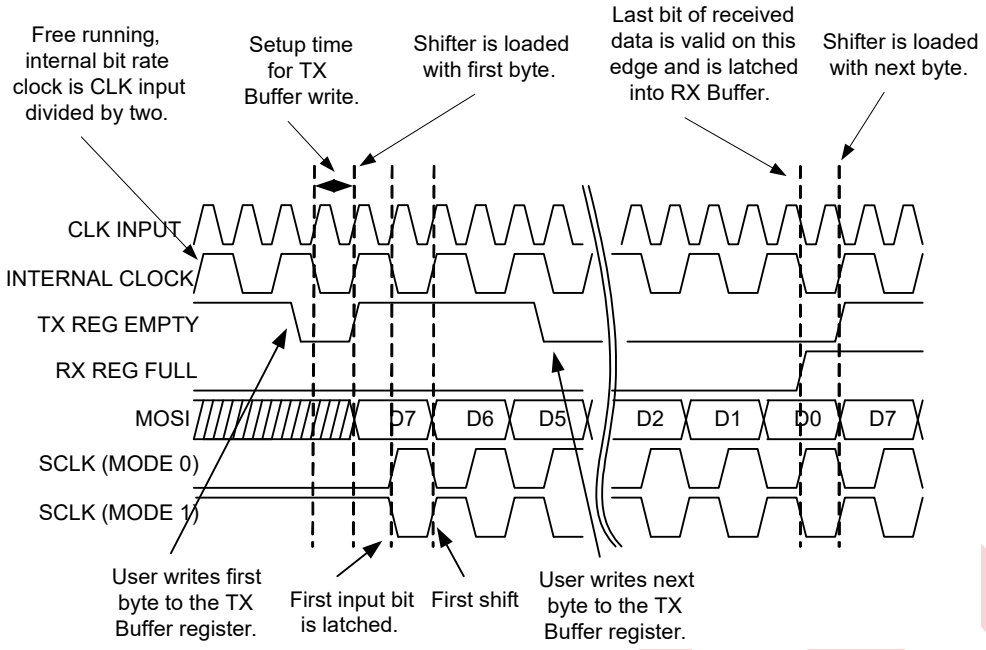

Figure 14-17. Typical SPIM Timing in Mode 2 and 3

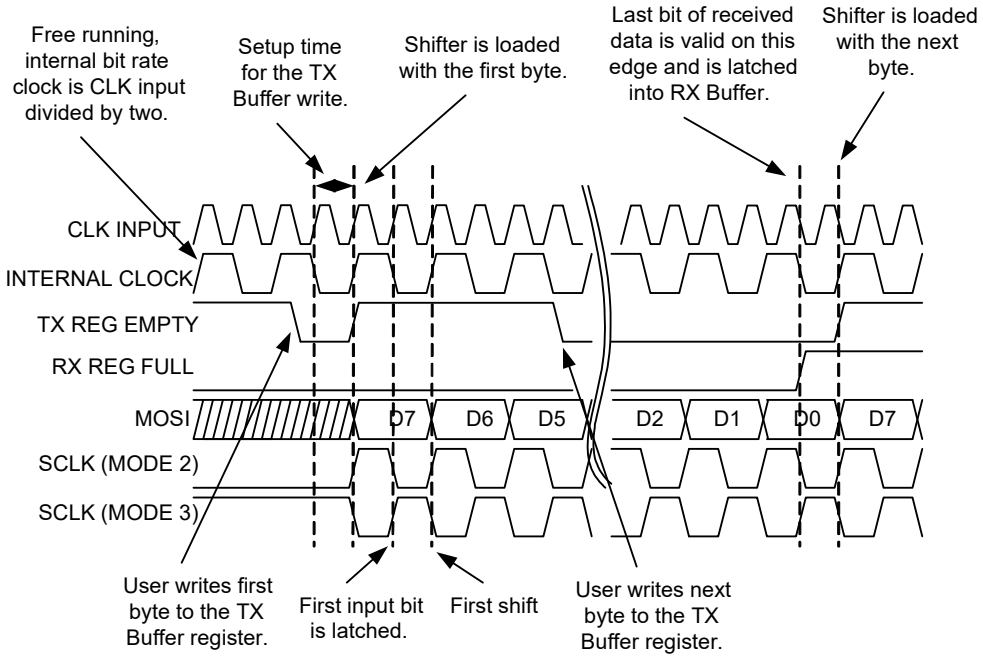

Status Generation and Interrupts. There are four status bits in an SPI Block: TX Reg Empty, RX Reg Full, SPI Complete, and Overrun.

TX Reg Empty indicates that a new byte can be written to the TX Buffer register. When the block is enabled, this status bit is immediately asserted. This status bit is cleared when the user writes a byte of data to the TX Buffer register. TX Reg Empty is a control input to the state machine and, if a transmission is not already in progress, the assertion of this control signal initiates one. This is the default SPIM block interrupt. However, an initial interrupt is not generated when the block is enabled. The user must write a byte to the TX Buffer register and that byte must be loaded into the shifter before interrupts generated from the TX Reg Empty status bit are enabled.

RX Reg Full is asserted on the edge that captures the eighth bit of receive data. This status bit is cleared when the user reads the RX Buffer register (DR2).

SPI Complete is an optional interrupt and is generated when eight bits of data and clock have been sent. In modes 0 and 1, this occurs one-half cycle after RX Reg Full is set; because in these modes, data is latched on the leading edge of the clock and there is an additional one-half cycle remaining to complete that clock. In modes 2 and 3, this occurs at the same edge that the receive data is latched. This signal may be used to read the received byte or it may be used by the SPIM to disable the block after data transmission is complete.

Overrun status is set, if RX Reg Full is still asserted from a previous byte when a new byte is about to be loaded into the RX Buffer register. Because the RX Buffer register is implemented as a latch, Overrun status is set one-half bit clock before RX Reg Full status.

See Figure 14-18 and Figure 14-19 for status timing relationships.

OBSOLETE

Figure 14-18. SPI Status Timing for Modes 0 and 1

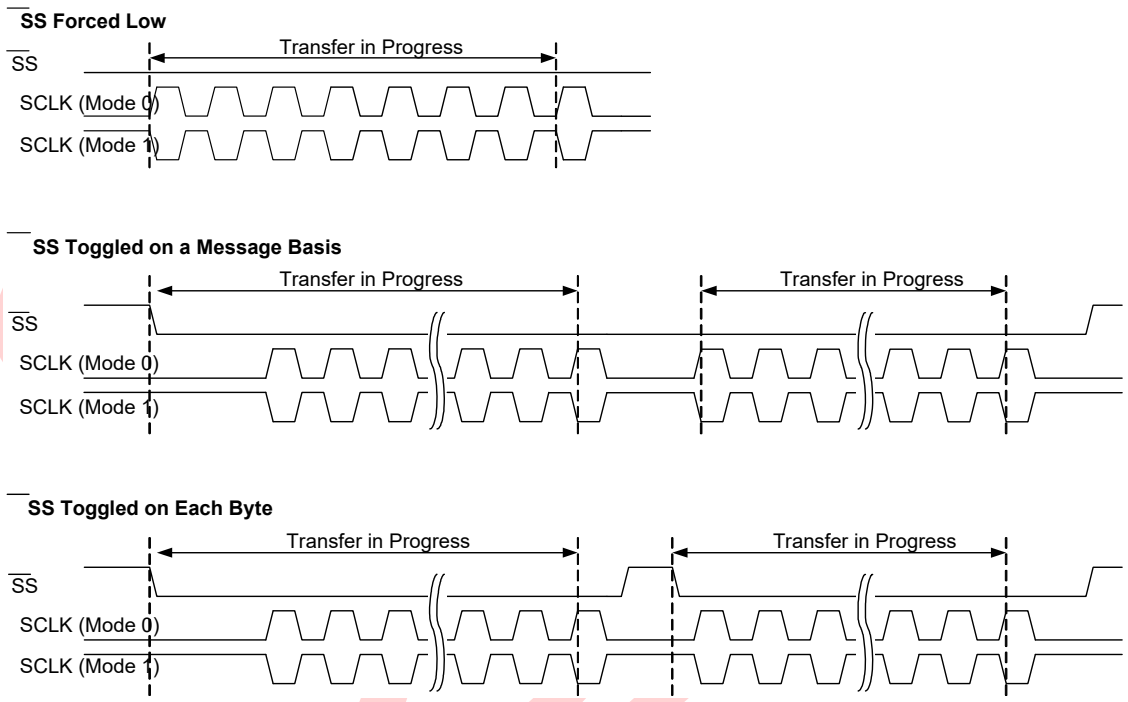

Figure 14-19. SPI Status Timing for Modes 2 and 3

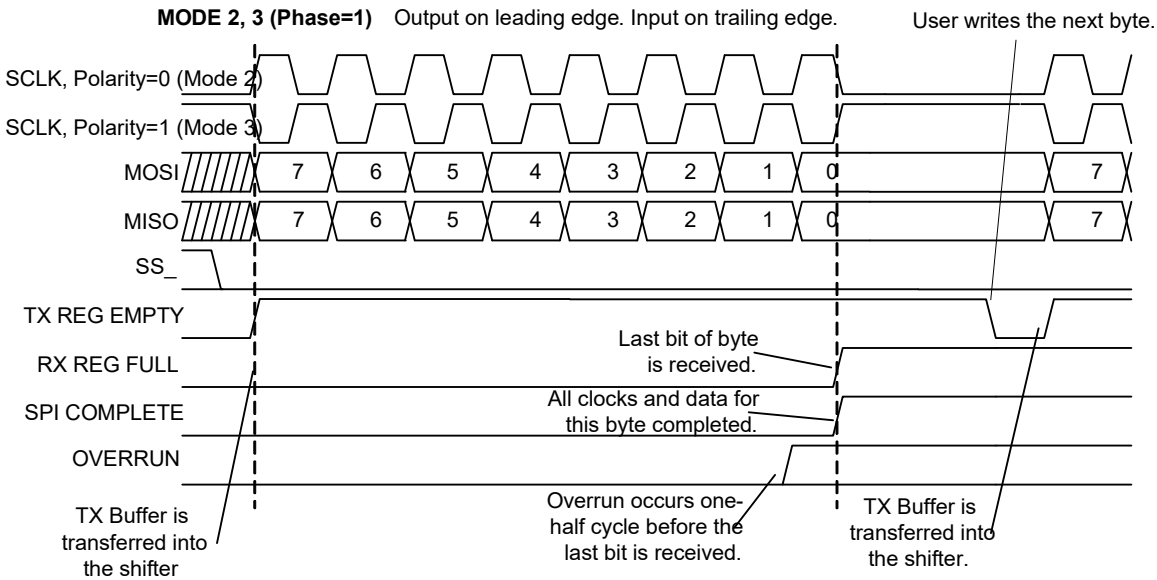

14.3.7 SPIS Timing

Enable/Disable Operation. As soon as the block is configured for SPI Slave and before enabling, the MISO output is set to idle at logic 1. Both the enable bit must be set and the SS_ asserted (either driven externally or forced by firmware programming) for the block to output data. When enabled, the primary output is the MSb or LSb of the shift register, depending on the LSb First configuration in bit 7 of the Control register. The auxiliary output of the SPIS is always forced into tri-state.

Since the SPIS has no internal clock, it must be enabled with setup time to any external master supplying the clock. Setup time is also required for a TX Buffer register write, before the first edge of the clock or the first falling edge of SS_, depending on the mode. This setup time must be assured through the protocol and an understanding of the timing between the master and slave in a system.

When the block is disabled, the MISO output reverts to its idle '1' state. All internal state is reset (including CR0 status) to its configuration-specific reset state, except for DR0, DR1, and DR2 which are unaffected.

Normal Operation. Typical timing for a SPIS transfer is shown in Figure 14-20 and Figure 14-21. If the SPIS is primarily being used as a receiver, the RX Reg Full (polling only) or SPI Complete (polling or interrupt) status may be used to determine when a byte has been received. In this way, the SPIS operates identically with the SPIM. However, there are two main areas in which the SPIS operates differently: 1) SPIS behavior related to the SS_ signal, and 2) TX data queuing (loading the TX Buffer register).

Figure 14-20. Typical SPIS Timing in Modes 0 and 1

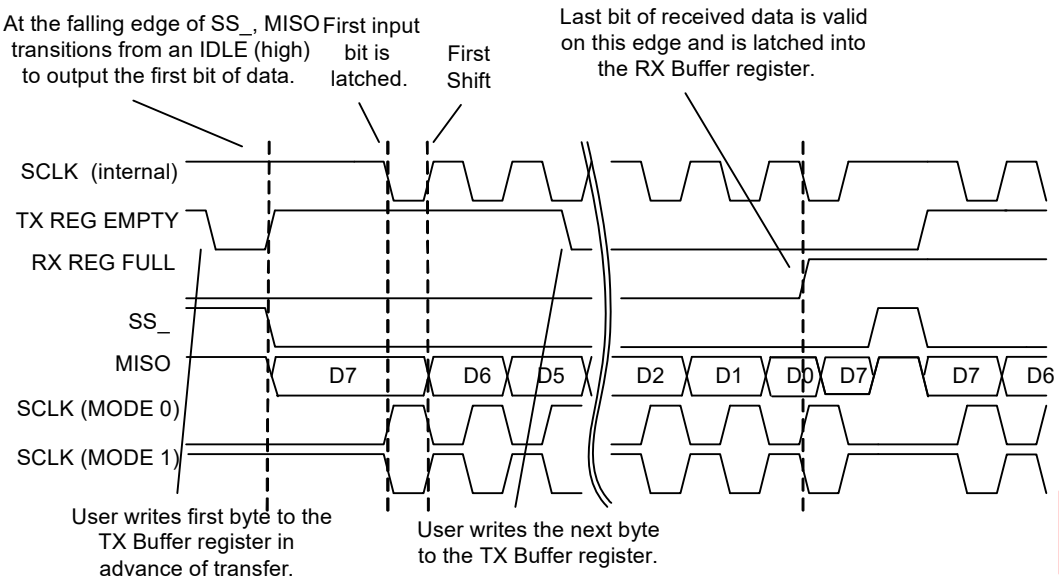

Figure 14-21. Typical SPIS Timing in Modes 2 and 3

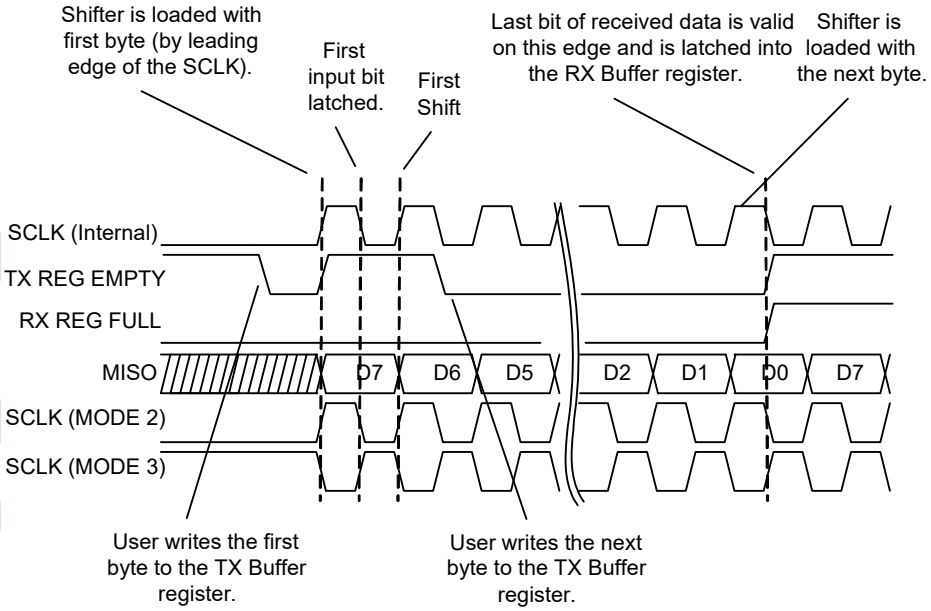

Slave Select (SS_, active low). Slave Select must be asserted to enable the SPIS for receive and transmit. There are two ways to do this:

1. Drive the auxiliary input from a pin (selected by the Aux I/O Select bits in the output register). This gives the SPI master control of the slave selection in a multi-slave environment.
2. SS_ may be controlled in firmware with register writes to the output register. When Aux I/O Enable = 1, Aux I/O Select bit 0 becomes the SS_ input. This allows the user to save an input pin in single slave environments.

When SS_ is negated (whether from an external or internal source), the SPIS state machine is reset and the MISO output is forced to idle at logic 1. In addition, the SPIS will ignore any incoming MOSI/SCLK input from the master.

Status Generation and Interrupts. There are four status bits in the SPIS Block: TX Reg Empty, RX Reg Full, SPI Complete, and Overrun. The timing of these status bits are identical to the SPIM, with the exception of TX Reg Empty which is covered in the section on TX data queuing.

Status Clear On Read. Refer to the same subsection in “SPIM Timing” on page 149.

TX Data Queuing. Most SPI applications call for data to be sent back from the slave to the master. Writing firmware to accomplish this requires an understanding of how the Shift register is loaded from the TX Buffer register.

All modes use the following mechanism: 1) If there is no transfer in progress, 2) if the shifter is empty, and 3) if data is available in the TX Buffer register, the byte is loaded into the shifter.

The only difference between the modes is that the definition of “transfer in progress” is slightly different between modes 0 and 1, and modes 2 and 3.

Figure 14-22 illustrates TX data loading in modes 0 and 1. A transfer in progress is defined to be from the falling edge of SS_ to the point at which the RX Buffer register is loaded with the received byte. This means that in order to send a byte in the next transfer, it must be loaded into the TX Buffer register before the falling edge of SS_. This ensures a minimum setup time for the first bit, since the leading edge of the first SCLK must latch in the received data. If SS_ is not toggled between each byte or is forced low through the configuration register, the leading edge of SCLK is used to define the start of transfer. However, in this case, the user must provide the required setup time (one-half clock minimum before the leading edge), with a knowledge of system latencies and response times.

Figure 14-22. Mode 0 and 1 Transfer in Progress

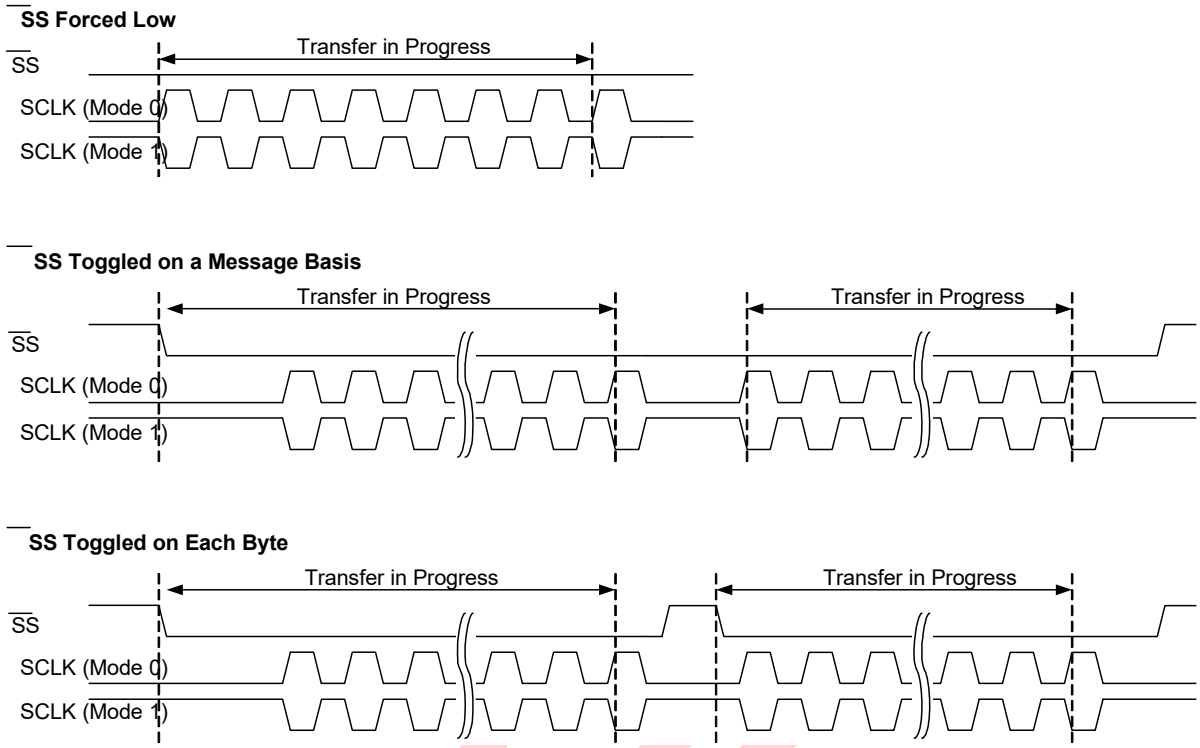

Figure 14-23 illustrates TX data loading in modes 2 and 3. In this case, there is no dependence on $\overline{SS}$ and a transfer in progress is defined to be from the leading edge of the first SCLK to the point at which the RX Buffer register is loaded with the received byte. Loading the shifter by the leading edge of the clock has the effect of providing the required one-half clock setup time, as the data is latched into the receiver on the trailing edge of the SCLK in these modes.

Figure 14-23. Mode 2 and 3 Transfer in Progress

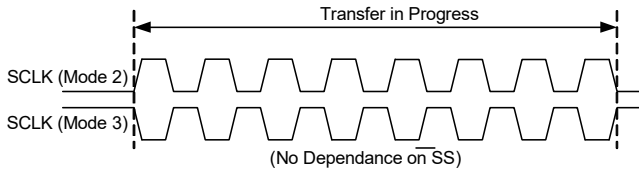

OBSOLETE

14.3.8 Transmitter Timing

Enable/Disable Operation. As soon as the block is configured for the Transmitter and before enabling, the primary output is set to idle at logic 1, the mark state. The output will remain '1' until the block is enabled and a transmission is initiated. The auxiliary output will also idle to '1', which is the idle state of the associated SPI mode 3 clock.

When the Transmitter is enabled, the internal reset is released on the divide-by-eight clock generator circuit. On the next positive edge of the selected input clock, this 3-bit up counter circuit, which generates the bit clock with the MSb, starts counting up from 00h, and is free-running thereafter.

When the block is disabled, the clock is immediately gated low. All internal state is reset (including CR0 status) to its configuration-specific reset state, except for DR0, DR1, and DR2 which are unaffected.

Transmit Operation. Transmission is initiated with a write to the TX Buffer register (DR1). The CPU write to this register is required to have one-half bit clock setup time for the data, to be recognized at the next positive internal bit clock edge. As shown in Figure 14-24, once the setup time is met, there is one clock of latency until the data is loaded into the shifter and the START bit is generated to the TXD (primary) output.

Figure 14-24. Typical Transmitter Timing

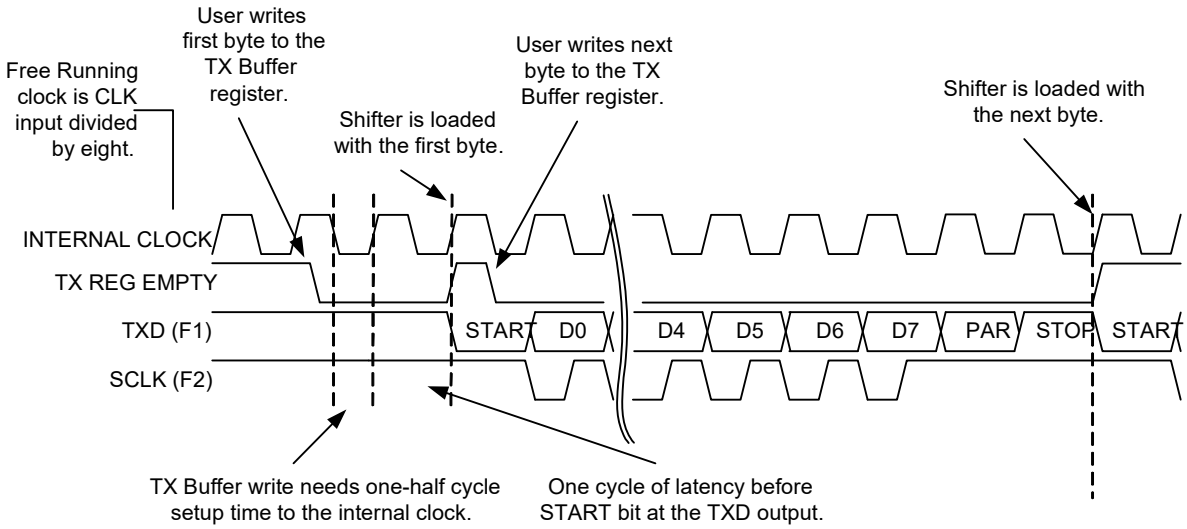

Figure 14-25 shows a detail of the Tx Buffer load timing. The data bits are shifted out on each of the subsequent clocks. Following the eighth bit, if parity is enabled, the parity bit is sent to the output. Finally, the STOP bit is multiplexed into the data stream. With one-half cycle setup to the next clock, if new data is available from the TX Buffer register, the next byte is loaded on the following clock edge and the process is repeated. If no data is available, a mark (logic 1) is output.

Figure 14-25. Tx Buffer Load Timing

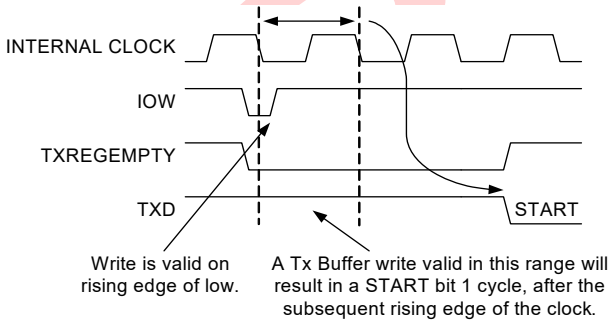

The SCLK (auxiliary) output has a SPI mode 3 clock associated with the data bits (for the mode 3 timing see Figure 14-15). During the mark (idle) and framing bits the SCLK output is high.

Status Generation. There are two status bits in the Transmitter CR0 register: TX Reg Empty and TX Complete.

TX Reg Empty indicates that a new byte can be written to the TX Buffer register. When the block is enabled, this status bit is immediately asserted. This status bit is cleared when the user writes a byte of data to the TX Buffer register and set when the data byte in the TX Buffer register is transferred into the shifter. If a transmission is not already in progress, the assertion of this signal initiates one subject to the timing.

The default interrupt in the Transmitter is tied to TX Reg Empty. However, an initial interrupt is not generated when the block is enabled. The user must write an initial byte to the TX Buffer register. That byte must be transferred into the shifter, before interrupts generated from the TX Reg Empty status bit are enabled. This prevents an interrupt from occurring immediately on block enable.

TX Complete is an optional interrupt and is generated when all bits of data and framing bits have been sent. It is cleared on a read of the CR0 register. This signal may be used to determine when it is safe to disable the block after data transmission is complete. In an interrupt driven Transmitter application, if interrupt on TX Complete is selected, the status must be cleared on every interrupt; otherwise, the status will remain high and no subsequent interrupts are logged. See Figure 14-26 for timing relationships.

Status Clear On Read. Refer to the SPIM subsection in “SPIM Timing” on page 149.

Figure 14-26. Status Timing for the Transmitter

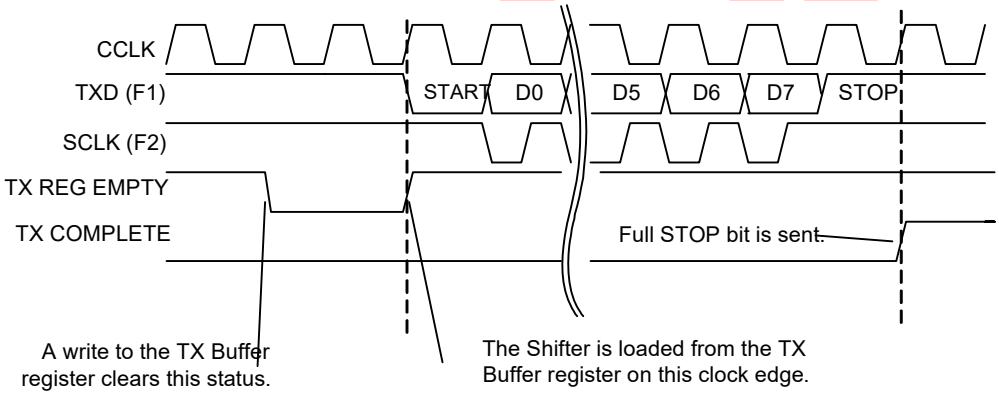

14.3.9 Receiver Timing

Enable/Disable Operation. As soon as the block is configured for Receiver and before enabling, the primary output is connected to the data input (RXD). This output will continue to follow the input, regardless of enable state. The auxiliary output will idle to '1', which is the idle state of the associated SPI mode 3 clock.

When the Receiver is enabled, the internal clock generator is held in reset until a START bit is detected on the input. The block must be enabled with a setup time to the first START bit input.

When the block is disabled, the clock is immediately gated low. All internal state is reset (including CR0 status) to its configuration-specific reset state, except for DR0, DR1, and DR2 which are unaffected.

Receive Operation. A clock, which must be eight times the desired baud rate, is selected as the CLK input. This clock is an input to the RX block clock divider. When the receiver is idle, the clock divider is held in reset. As shown in Figure 14-27, reception is initiated when a START bit (logic 0) is detected on the RXD input. When this occurs, the reset is negated to the clock divider and the 3-bit counter starts an up-count. The block clock is derived from the MSb of this counter (corresponding to a count of four), which serves to sample each incoming bit at the nominal center point. This clock also sequences the state machine at the specified bit rate.

The sampled data is registered into an input flip-flop. This flip-flop feeds the DR0 Shift register. Only data bits are shifted into the Shift register.

At the STOP sample point, the block is immediately (within one cycle of the 24 MHz system clock) set back into an idle state. In this way, the clock generation circuit can immediately enable the search for the next START bit, thereby re-synchronizing the bit clock with the incoming bit rate on every new data byte reception. The RX Reg Full status bit, as well as error status, is also set at the STOP sample point.

To facilitate connection to other digital blocks, the RXD input is passed directly to the RXDOUT (primary) output. The SCLK (auxiliary) output has an SPI mode 3 clock associated with the data bits (for mode 3 timing see Figure 14-27). During the mark (idle) and framing bits, the SCLK output is high.

Figure 14-27. Receiver Operation

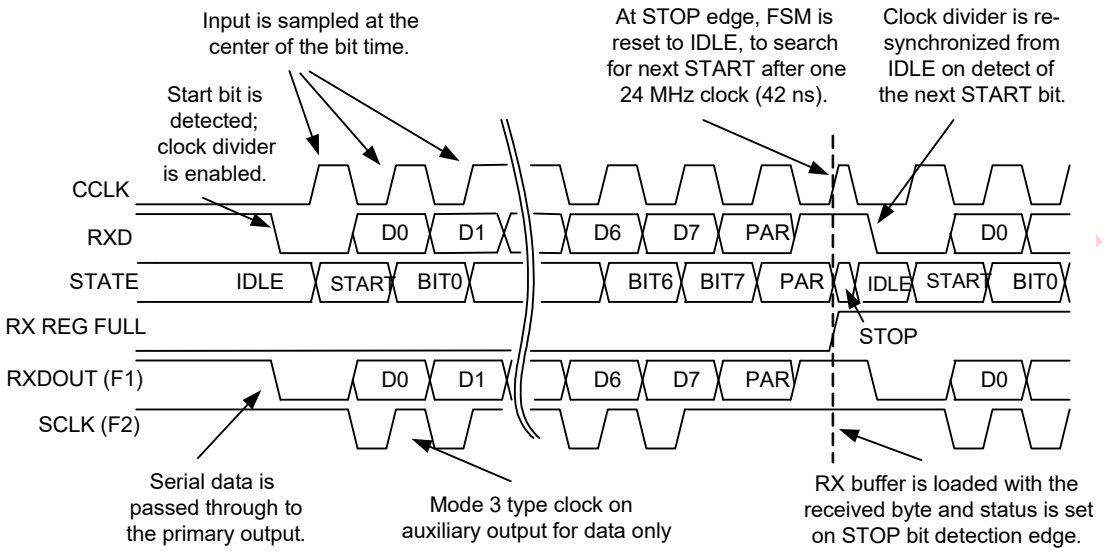

Clock Generation and Start Detection. The input clock selection is a free running, eight times over-sampling clock. This clock is used by the clock divider circuit to generate the block clock at the bit rate. As shown in Figure 14-28, the clock block is derived from the MSb of a 3-bit counter, giving a sample point as near to the center of the bit time as possible. This block clock is used to clock all internal circuits.

Since the RXD bit rate is asynchronous to the block bit clock, these clocks must be continually re-aligned. This is accomplished with the START bit detection.

When in IDLE state, the clock divider is held in reset. On START (when the input RXD transitions are detected as a logic 0), the reset is negated and the divider is enabled to count at the eight times rate. If the RXD input is still logic 0 after three samples of the input clock, the status RXACTIVE is asserted, which initiates a reception. If this sample of the RXD line is a logic 1, the input '0' transition was assumed to be a false start and the Receiver remains in the idle state.

As shown in Figure 14-28, the internal bit clock (CCLK) is running slower than the external TX bit clock and the STOP bit is sampled later than the actual center point. After the STOP bit is sampled, the 24 MHz reset pulse forces the Receiver back to an idle state. In this state, the next START bit search is initiated, resynchronizing the RX bit clock to the TX bit clock.

Figure 14-28. Clock Generation and Start Detection

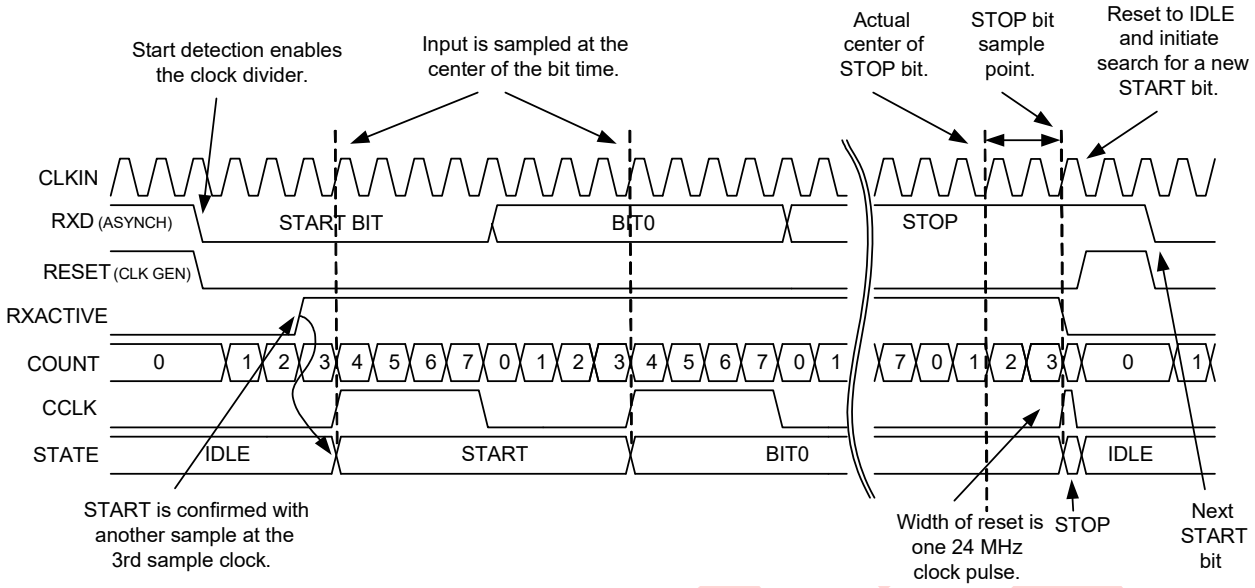

This resynchronization process (forcing the state back to idle) occurs regardless of the value of the STOP bit sample. It is important to reset as soon as possible, so that maximum performance can be achieved. Figure 14-29 shows an example where the RX block clock bit rate is slower than the external TX bit rate. The sample point shifts to successively later times. In the extreme case shown, the RX samples the STOP bit at the trailing edge. In this case, the receiver has counted 9.5 bit times, while the transmitter has counted 10 bit times. Therefore, for a 10-bit message, the maximum theoretical clock offset, for the message to be received correctly, is represented by one-half bit time or five percent. If the RX and TX clocks exceed this offset, a logic 0 may be sampled for the STOP bit. In this case, the Framing Error status is set.

Figure 14-29. Example RX Re-Synchronization

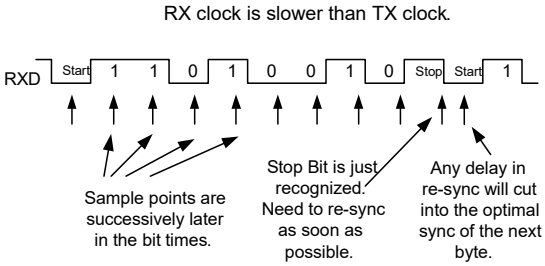

This theoretical maximum will be degraded by the resynchronization time, which is fixed at approximately 42 ns. In a typical 115.2 Kbaud example, the bit time is 8.70 µs. In this case the new maximum offset is:

((4.35 ms - 42 ns) / 4.35 ms) x 5% or 4.95%

At slower baud rates, this value gets closer to the theoretical maximum of five percent.

Status Generation. There are five status bits in a Receiver block: RX Reg Full, RX Active, Framing Error, Overrun, and Parity Error. All status bits, except RX Active and Overrun, are set synchronously on the STOP bit sample point.

RX Reg Full indicates a byte has been received and transferred into the RX Buffer register. This status bit is cleared when the user reads the RX Buffer register (DR2). The setting of this bit is synchronized to the STOP sample point. This is the earliest point at which the Framing Error status can be set; and therefore, error status is defined to be valid when RX Reg Full is set.

RX Active can be polled to determine if a reception is in progress. This bit is set on START detection and cleared on STOP detection. This bit is not ***sticky*** and there is no way for the user to clear it.

Framing Error status indicates that the STOP bit associated with a given byte was not received correctly (expecting a '1', but received a '0'). This will typically occur when the difference between the baud rates of the transmitter and receiver is greater than the maximum allowed.

Overrun occurs when there is a received data byte in the RX Buffer register and a new byte is loaded into the RX Buffer register, before the user has had a chance to read the previous one. Because the RX Buffer register is actually a latch, Overrun status is set one-half cycle before RX Reg Full. This means that although the new data is not available, the previous data has been overwritten because the latch was opened.

Parity Error status indicates that resulting parity calculation on the received byte does not match the value of the parity bit that was transmitted. This status is set on the sample point of the STOP signal.

Status Clear On Read. Refer to the SPIM subsection in "SPIM Timing" on page 149.

Figure 14-30. Status Timing for Receiver

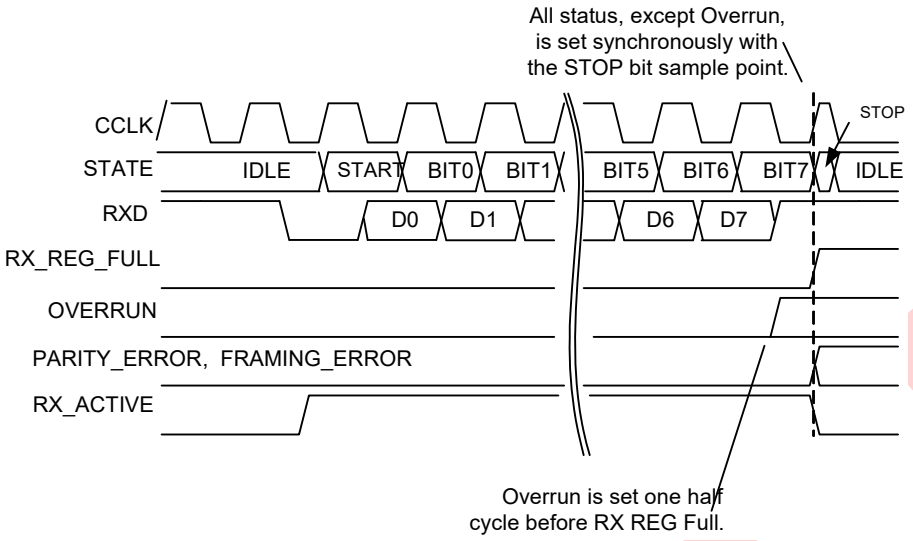

OBSOLETE

Section D: Analog System

The configurable Analog System section discusses the analog components of the CY8CLED0xx0x PowerPSoC devices and the registers associated with those components. Note that the analog output drivers are described in the PSoC Core section, Analog Output Drivers chapter on page 87, because they are part of the core input and output signals. This section encompasses the following chapters:

- Analog Interface on page 165
- Analog Array on page 177
- Analog Input Configuration on page 185
- Analog Reference on page 189
- Continuous Time PSoC Block on page 193
- Switched Capacitor PSoC Block on page 199

Top Level Analog Architecture

The figure below displays the top level architecture of the PowerPSoC device's analog system. With the exception of the analog drivers, each component of the figure is discussed at length in this section. Analog drivers are discussed in detail within the PSoC Core section, in the Analog Output Drivers chapter on page 87.

PowerPSoC Analog System

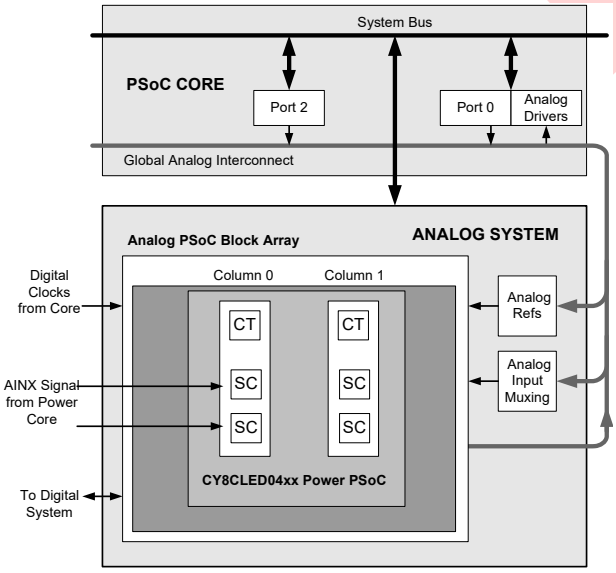

Interpreting the Analog Documentation

Information in this section covers the CY8CLED0xx0x PowerPSoC devices. The following table lists the resources available for the CY8CLED0xx0x. While reading the analog system section, determine and keep in mind the number of analog columns that are in the CY8CLED0xx0x is 2.

PowerPSoC Device Characteristics

PSoC Part Number	Digital I/O (max)	Digital Rows	Digital Blocks	Analog Inputs	Analog Outputs	Analog Columns	Analog Blocks
CY8CLED0xx0x	14	2	8	**14**	**2**	**2**	**6**

OBSOLETE

Application Description

The PSoC analog blocks, like all PSoC blocks, are user programmable system resources and configured to provide a wide variety of peripheral functions. On-chip analog PSoC blocks reduce the need for many MCU part types and external peripheral components. The *PSoC Designer Software Integrated Development Environment* provides automated configuration of PSoC blocks by selecting the desired functions. PSoC Designer then generates the proper configuration information and prints a device data sheet unique to that configuration.

To support the various analog functions, a precision internal voltage reference enables accurate analog comparisons. Also, a temperature sensor input is provided to the analog PSoC block array, supporting applications such as battery chargers and data acquisition, without requiring external components.

Defining the Analog Blocks

There are three analog PSoC block types: Continuous Time (CT) blocks, and Type C and Type D Switch Capacitor (SC) blocks. CT blocks provide continuous time analog functions. SC blocks provide switched capacitor analog functions.

Each analog block has many potential inputs and several outputs. The inputs to these blocks include ***analog signals*** from external sources, intrinsic analog signals driven from neighboring analog blocks, or various voltage reference sources.

The analog blocks are organized into columns. Each column contains one CT Type B (ACB) block, one SC Type C (ASC) block, and one SC Type D (ASD) block. For the CY8CLED0xx0x device family, the number of analog columns is 2.

The blocks in a particular column all run off the same clocking source. The blocks in a column also share some output bus resources. Refer to the Analog Interface chapter on page 165 for additional information.

There are three types of outputs from each analog column:

1. The analog output bus (ABUS) is an analog bus resource that is shared by all of the analog blocks in a column. Only one block in a column can actively drive this bus at any one time, with the user having control of this output through register settings. This is the only analog output that can be driven directly to a pin.
2. The comparator bus (CBUS) is a digital bus resource that is shared by all of the analog blocks in a column. Only one block in a column can be actively driving this bus at any one time, with the user having control of this output through register settings.
3. The local outputs (OUT, GOUT, and LOUT in the Continuous Time blocks) are routed to neighboring columns. The various input ***multiplexer (mux)*** connections (NMux, PMux, RBotMux, AMux, BMux, and CMux) all use the output bus from one block as their input.

Analog Functionality

The following is a sampling of the functions that operate within the capability of the analog PSoC blocks, using one analog PSoC block, multiple analog blocks, a combination of more than one *type* of analog block, or a combination of analog and digital PSoC blocks. Most of these functions are currently available as ***user modules*** in *PSoC Designer*. Others will be added in the future. Refer to the *PSoC Designer* software for additional information and the most up-to-date list of user modules.

- Delta-Sigma Analog-to-Digital Converters
- Successive Approximation Analog-to-Digital Converters
- Incremental Analog-to-Digital Converters
- Digital to Analog Converters
- Programmable Gain/Loss Stage
- Analog Comparators
- Zero-Crossing Detectors
- Sample and Hold
- Low-Pass Filter
- Band-Pass Filter
- Notch Filter
- Amplitude Modulators
- Amplitude Demodulators
- Sine-Wave Generators
- Sine-Wave Detectors
- Sideband Detection
- Sideband Stripping
- Temperature Sensor
- Audio Output Drive
- DTMF Generator
- FSK Modulator
- Embedded Modem

By modifying registers, as described in this document, users can configure PSoC blocks to perform these functions and more. The philosophy of the analog functions supplied is as follows.

- Cost effective, single-ended configuration for reasonable speed and accuracy, providing a simple interface to most real-world analog inputs and outputs.
- Flexible, System-on-Chip programmability, providing variations in functions.
- Function specific, easily selected trade-offs of accuracy and resolution with speed, resources (number of analog blocks), and power dissipated for that application.

OBSOLETE

Analog Register Summary

The table below lists all the PowerPSoC registers for the analog system in address order (Add. column) within their system resource configuration. The bits that are grayed out are reserved bits. If these bits are written, they should always be written with a value of '0'. The naming conventions for the SC and CT registers and their arrays of PSoC blocks are detailed in their respective table title rows.

Note that the CY8CLED0xx0x PowerPSoC analog array is a 2 column device.

Summary Table of the Analog Registers

Add.	Name	Bit 7	Bit 6	Bit 5	Bit 4	Bit 3	Bit 2	Bit 1	Bit 0	Access
ANALOG INTERFACE REGISTERS (page 170)										
0,64h	CMP_CR0			COMP[1:0]				AINT[1:0]		# : 0
0,65h	ASY_CR		SARCNT[2:0]			SARSIGN	SARCOL[1:0]		SYNCEN	RW : 00
0,66h	CMP_CR1			CLDIS[1]	CLDIS[0]			CLK1X[1]	CLK1X[0]	RW : 0
0,E6h	DEC_CR0	IGEN[3:0]				ICLKS0	DCOL[1:0]		DCLKS0	RW : 00
0,E7h	DEC_CR1		IDEC	ICLKS3	ICLKS2	ICLKS1	DCLKS3	DCLKS2	DCLKS1	RW : 00
1,60h	CLK_CR0					AColumn1[1:0]		AColumn0[1:0]		RW : 0
1,61h	CLK_CR1		SHDIS	ACLK1[2:0]			ACLK0[2:0]			RW : 00
1,63h	AMD_CR0						AMOD0[2:0]			RW : 0
1,64h	CMP_GO_EN	GOO5	GOO1	SEL1[1:0]		GOO4	GOO0	SEL0[1:0]		RW : 00
1,66h	AMD_CR1						AMOD1[2:0]			RW : 0
1,67h	ALT_CR0	LUT1[3:0]				LUT0[3:0]				RW : 00
1,68h	ALT_CR1	LUT3[3:0]				LUT2[3:0]				RW : 00
1,69h	CLK_CR2					ACLK1R			ACLK0R	RW : 0
ANALOG INPUT CONFIGURATION REGISTERS (page 187)										
0,60h	AMX_IN					ACI1[1:0]		ACI0[1:0]		RW : 0
1,62h	ABF_CR0	ACol1Mux		ABUF1EN		ABUF0EN		Bypass	PWR	RW : 00
ANALOG REFERENCE REGISTER (page 190)										
0,63h	ARF_CR		HBE	REF[2:0]			PWR[2:0]			RW : 00
										RW : 00
CONTINUOUS TIME PSoC BLOCK REGISTERS (page 195)										
x,70h	ACB00CR3					LPCMPEN	CMOUT	INSAMP	EXGAIN	RW : 0
x,71h	ACB00CR0	RTapMux[3:0]				Gain	RTopMux	RBotMux[1:0]		RW : 00
x,72h	ACB00CR1	AnalogBus	CompBus	NMux[2:0]			PMux[2:0]			RW : 00
x,73h	ACB00CR2	CPhase	CLatch	CompCap	TMUXEN	TestMux[1:0]		PWR[1:0]		RW : 00
x,74h	ACB01CR3					LPCMPEN	CMOUT	INSAMP	EXGAIN	RW : 0
x,75h	ACB01CR0	RTapMux[3:0]				Gain	RTopMux	RBotMux[1:0]		RW : 00
x,76h	ACB01CR1	AnalogBus	CompBus	NMux[2:0]			PMux[2:0]			RW : 00
x,77h	ACB01CR2	CPhase	CLatch	CompCap	TMUXEN	TestMux[1:0]		PWR[1:0]		RW : 00
SWITCHED CAPACITOR PSoC BLOCK REGISTERS (page 202)										
Switched Capacitor Block Registers, Type C (page 203)										
x,80h	ASC10CR0	FCap	ClockPhase	ASign	ACap[4:0]					RW : 00
x,81h	ASC10CR1	ACMux[2:0]			BCap[4:0]					RW : 00
x,82h	ASC10CR2	AnalogBus	CompBus	AutoZero	CCap[4:0]					RW : 00
x,83h	ASC10CR3	ARefMux[1:0]		FSW1	FSW0	BMuxSC[1:0]		PWR[1:0]		RW : 00
x,94h	ASC21CR0	FCap	ClockPhase	ASign	ACap[4:0]					RW : 00
x,95h	ASC21CR1	ACMux[2:0]			BCap[4:0]					RW : 00
x,96h	ASC21CR2	AnalogBus	CompBus	AutoZero	CCap[4:0]					RW : 00
x,97h	ASC21CR3	ARefMux[1:0]		FSW1	FSW0	BMuxSC[1:0]		PWR[1:0]		RW : 00
SWITCHED CAPACITOR BLOCK REGISTERS, TYPE D (page 206)										
x,84h	ASD11CR0	FCap	ClockPhase	ASign	ACap[4:0]					RW : 00

Summary Table of the Analog Registers *(continued)*

Add.	Name	Bit 7	Bit 6	Bit 5	Bit 4	Bit 3	Bit 2	Bit 1	Bit 0	Access
x,85h	ASD11CR1	AMux[2:0]			BCap[4:0]					RW : 00
0,86h	ASD11CR2	AnalogBus	CompBus	AutoZero	CCap[4:0]					RW : 00
0,87h	ASD11CR3	ARefMux[1:0]		FSW1	FSW0	BSW	BMuxSD	PWR[1:0]		RW : 00
x,90h	ASD20CR0	FCap	ClockPhase	ASign	ACap[4:0]					RW : 00
x,91h	ASD20CR1	AMux[2:0]			BCap[4:0]					RW : 00
x,92h	ASD20CR2	AnalogBus	CompBus	AutoZero	CCap[4:0]					RW : 00
x,93h	ASD20CR3	ARefMux[1:0]		FSW1	FSW0	BSW	BMuxSD	PWR[1:0]		RW : 00

LEGEND
x An "x" before the comma in the address field indicates that this register can be accessed or written to no matter what bank is used.
Access is bit specific. Refer to the Register Details chapter on page 361 for additional information.
R Read register or bit(s).
W Write register or bit(s).

OBSOLETE

15. Analog Interface

This chapter explains the Analog Interface and its associated registers. The analog system interface is a collection of system level interfaces to the analog array and analog reference block. For a complete table of the analog interface registers, refer to the "Summary Table of the Analog Registers" on page 163. For a quick reference of all PowerPSoC registers in address order, refer to the Register Details chapter on page 361.

15.1 Architectural Description

Figure 15-1 displays the top level diagram of the PowerPSoC device's analog interface system.

Figure 15-1. Analog Comparator Bus Slice

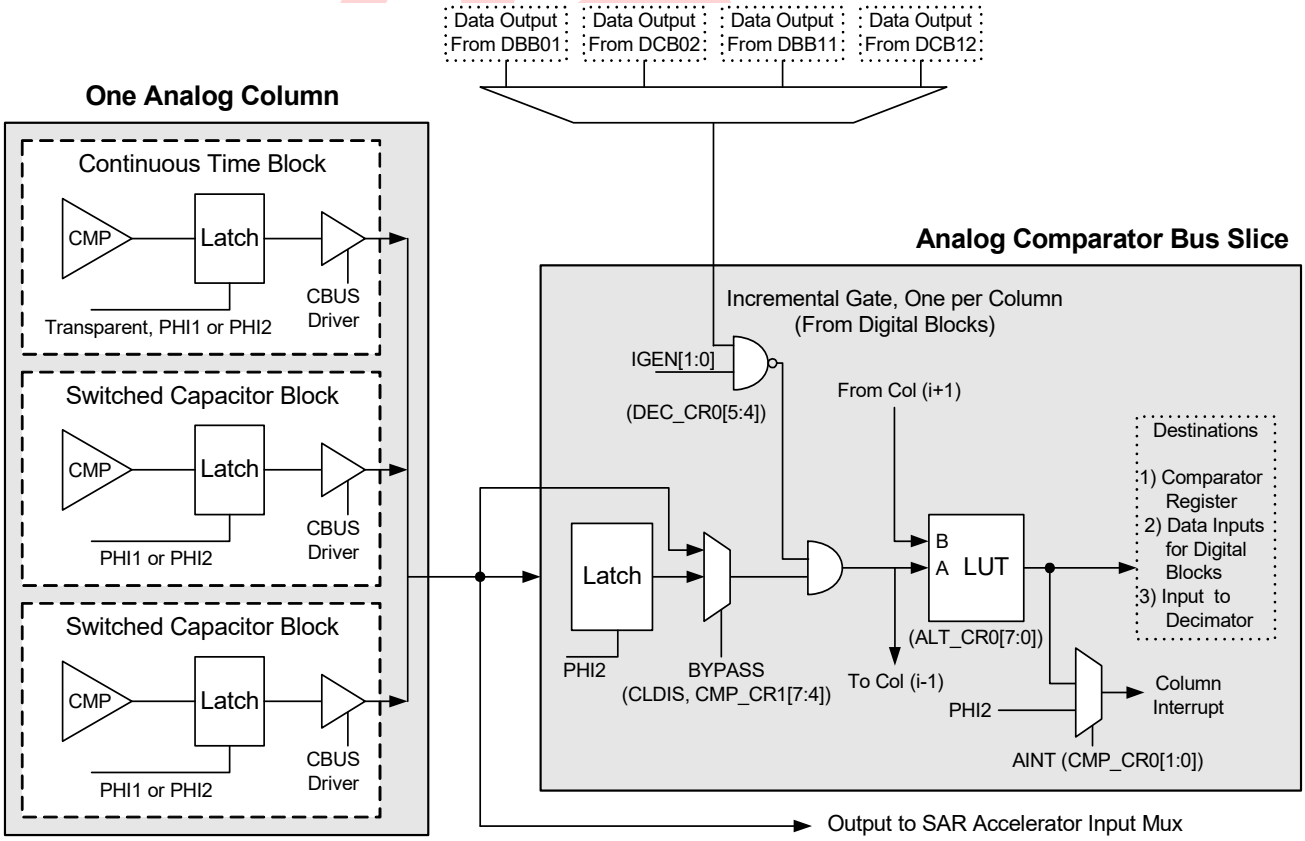

15.1.1 Analog Data Bus Interface

To minimize loading on the CPU system data bus, the Analog Data Bus Interface provides input and output functionality between the system bus and the analog data bus. Three state bidirectional drivers are used to enable communication and isolation between the two buses.

15.1.2 Analog Comparator Bus Interface

Each analog column has a dedicated comparator bus associated with it. Every analog PSoC block has a comparator output that can drive this bus. However, only one analog block in a column can actively drive the comparator bus for a column at any one time. The output on the comparator bus drives into the digital blocks as a data input. It also serves as an input to the decimator, as an interrupt input, and is available as read only data in the Analog Comparator Control register (CMP_CR0).

Figure 15-1 illustrates one column of the comparator bus. In the Continuous Time (CT) analog blocks, the CPhase and CLatch bits of CT Block Control Register 2 determine whether the output signal on the comparator bus is latched inside the block, and if it is, which clock phase it is latched on. In the Switched Capacitor (SC) analog blocks, the output on the comparator bus is always latched. The ClockPhase bit in SC Block Control Register 0 determines the phase on which this data is latched and available.

The comparator bus is latched before it is available, to either drive the digital blocks, interrupt, decimator, or for it to be read in the CMP_CR0 register. The latch for each comparator bus is transparent (the output tracks the input) during the high period of PHI2. During the low period of PHI2, the latch retains the value on the comparator bus during the high-to-low transition of PHI2. The CMP_CR0 register is described in the “CMP_CR0 Register” on page 170. There is also an option to force the latch in each column into a transparent mode by setting bits in the CMP_CR1 register.

The CY8CLED0xx0x devices have an additional comparator synchronization option in which the 1X direct column clock selection is used to synchronize the analog comparator bus. This allows for higher frequency comparator sampling.

As shown in Figure 15-1, the comparator bus output is gated by the primary output of a selected digital block. This feature is used to precisely control the integration period of an incremental ADC. Any digital block can be used to drive the gate signal. This selection may be made with the ICLKS bits in registers DEC_CR0 and DEC_CR1. This function may be enabled on a column-by-column basis, by setting the IGEN bits in the DEC_CR0 register.

The analog comparator bus output values can be modified or combined with another analog comparator bus through the Analog ***lookup table (LUT)*** function. The LUT takes two inputs, A and B, and provides a selection of 4 possible logic functions for those inputs. The LUT A and B inputs for each column comparator output is shown in the following table.

Table 15-1. A and B Inputs for Each Column Comparator LUT Output

Comparator LUT Output	A	B
Column 0	ACMP0	ACMP1
Column 1	ACMP1	0
Column 2	0	0
Column 3	0	ACMP0

The LUT configuration is set in two control registers, ALT_CR0 and ALT_CR1. Each selection for each column is encoded in four bits. The function value corresponding to the bit encoding is shown in the following table.

Table 15-2. RDIxLTx Register

LUTx[3:0]	0h: 0000: FALSE 1h: 0001: A .AND. $\overline{B}$ 2h: 0010: A .AND. $\overline{B}$ 3h: 0011: $\overline{A}$ 4h: 0100: $\overline{A}$ .AND. B 5h: 0101: B 6h: 0110: A .XOR. B 7h: 0111: A .OR. B 8h: 1000: A .NOR. B 9h: 1001: $\overline{A}$ .XNOR. B Ah: 1010: $\overline{B}$ Bh: 1011: $\overline{A}$ .OR. $\overline{B}$ Ch: 1100: $\overline{A}$ Dh: 1101: $\overline{A}$ .OR. B Eh: 1110: A. NAND. B Fh: 1111: TRUE

15.1.3 Analog Column Clock Generation

The analog array switched capacitor blocks require a two-phase, non-overlapping clock. The switched cap blocks are arranged in four columns, two to a column (a third block in the column is a continuous time block).

An analog column clock generator is provided for each column and this clock is shared among the blocks in that column. The input clock source for each column clock generator is selectable according to the CLK_CR0 register. It is important to note that regardless of the clock source selected, the output frequency of the column clock generator is the input frequency divided by four. There are four selections for each column: V1, V2, ACLK0, and ACLK1. The V1 and V2 clock signals are global system clocks. Programming options for these system clocks can be accessed in the OSC_CR1 register. Each of the ACLK0 and ACLK1 clock selections are driven by a selection of digital block outputs. The settings for the digital block selection are located in register CLK_CR1 and the register CLK_CR2.

PROFILE

The timing for analog column clock generation is shown in Figure 15-2. The dead band time between two phases of the clock is designed to be a minimum of 21 ns.

Figure 15-2. Two Phase Non-Overlapping Clock Generation

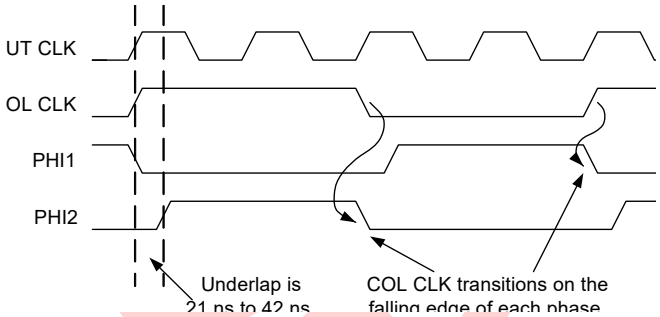

15.1.3.1 Column Clock Synchronization

When analog signals are routed between blocks in adjacent columns, it is important that the clocks in these columns are synchronized in phase and frequency. Frequency synchronization may be achieved by selecting the same input source to two or more columns. However, there is a special feature of the column clock interface logic that provides a resynchronization of clock phase. This function is activated on any I/O write to either the Column Clock Selection register (CLK_CR0) or the Reference Calibration Clock register (RCL_CR). A write to either of these registers initiates a synchronous reset of the column clock generators, restarting all clocks to a known state. This action causes all columns with the same selected input frequency to be in phase. Writing these registers should be avoided during critical analog processing, as column clocks are all re-initialized and thus a discontinuity in PHI1/PHI2 clocking will occur.

Figure 15-3. Column Clock Resynchronize on an I/O Write

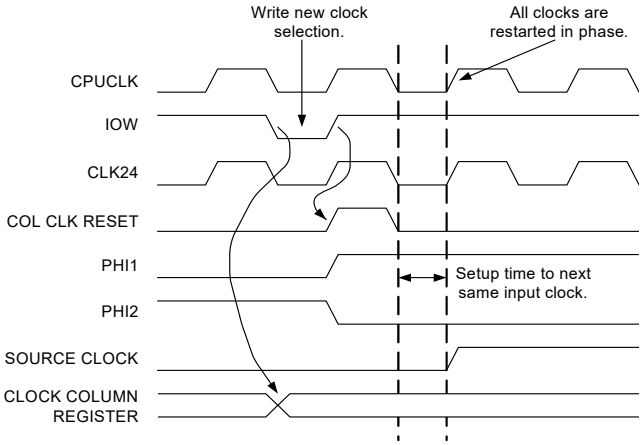

OBSOLETE

15.1.4 Decimator and Incremental ADC Interface

The Decimator and Incremental ADC Interface provides hardware support and signal routing for analog-to-digital conversion functions, specifically the Delta Signal ADC and the Incremental ADC. The control signals for this interface are split between two registers: DEC_CR0 and DEC_CR1.

15.1.4.1 Decimator

The Decimator is a hardware block that is used to perform digital processing on the analog block outputs.

The DCLKS0 and DCLKS1 bits, which are split between the DEC_CR0 and DEC_CR1 registers, are used to select a source for the decimator output latch enable. The decimator is typically run autonomously over a given period. The length of this period is set in a timer block that is running in conjunction with the analog processing. At the terminal count of this timer, the primary output goes high for one clock cycle. This pulse is translated into the decimator output latch enable signal, which transfers data from the internal accumulators to an output buffer. The terminal count also causes an interrupt and the CPU may read this output buffer at any time between one latch event and the next.

15.1.4.2 Incremental ADC

The analog interface has support for the incremental ADC operation through the ability to gate the analog comparator outputs. This gating function is required in order to precisely control the digital integration period that is performed in a digital block, as part of the function. A digital block pulse width modulator (PWM) is used as a source to provide the gate signal. Only one source for the gating signal can be selected. However, the gating can be applied independently to any of the column comparator outputs.

The ICLKS bits, which are split between the DEC_CR0 and DEC_CR1 registers, are used to select a source for the incremental gating signal. The four IGEN bits are used to independently enable the gating function on a column-by-column basis.

15.1.5 Analog Modulator Interface

The Analog ***Modulator*** Interface provides a selection of signals that are routed to any of the four analog array ***modulation*** control signals. There is one modulation control signal for each Type C Analog Switched Capacitor block in every analog column. There are eight selections, which include the analog comparator bus outputs, two global outputs, and a digital block broadcast bus. The selections for all columns are identical and are contained in the AMD_CR0 and AMD_CR1 registers. The Mod bit is XORed with the Switched Capacitor block ***sign bit*** (ASign in ASCxxCR0) to provide dynamic control of that bit.

15.1.6 Analog Synchronization Interface (Stalling)

For high precision analog operation, it is necessary to precisely time when updated register values are available to the analog PSOC blocks. The optimum time to update values in Switch Capacitor registers is at the beginning of the PHI1 active period. Depending on the relationship between the CPU CLK and the analog column clock, the CPU I/O write cycle can occur at any 24 MHz master clock boundary in the PHI1 or PHI2 cycle. Register values may be written at arbitrary times; however, glitches may be apparent at analog outputs. This is because the capacitor value is changing when the circuit is designed to be settling.

The SYNCEN bit in the Analog Synchronization Control register (ASY_CR) is designed to address this problem. When the SYNCEN bit is set, an I/O write instruction to any Switch Capacitor register is blocked at the interface and the CPU will stall. On the subsequent rising edge of PHI1, the CPU stall is released, allowing the I/O write to be performed at the destination analog register. This mode synchronizes the I/O write action to perform at the optimum point in the analog cycle, at the expense of CPU ***bandwidth***. Figure 15-4 shows the timing for this operation.

Figure 15-4. Synchronized Write to a DAC Register

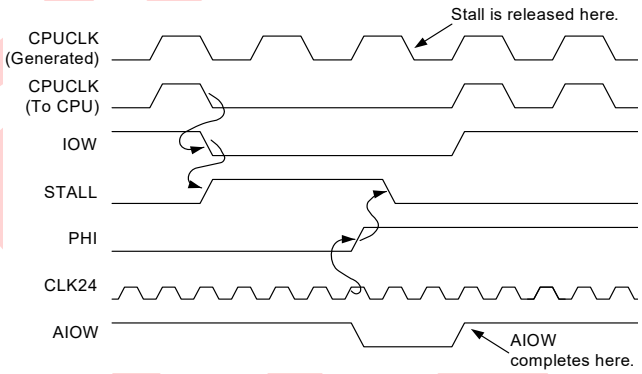

As an alternative to stalling, the source for the analog column interrupts is set as the falling edge of the PHI2 clock. This configuration synchronizes the CPU to perform the I/O write after the PHI2 phase is completed, which is equivalent to the start of PHI1.

15.2 Application Description

15.2.1 SAR Hardware Acceleration

The Successive Approximation Register (SAR) ***algorithm*** is a binary search on the Digital-to-Analog Converter (DAC) code that best matches the input voltage that is being measured. The first step is to take an initial guess at mid-scale, which effectively splits the range by half. The DAC output

value is then compared to the input voltage. If the guess is too low, a result bit is set for that binary position and the next guess is set at mid-scale of the remaining upper range. If the guess is too high, a result bit is cleared and the next guess is set at mid-scale of the remaining lower range. This process is repeated until all bits are tested. The resulting DAC code is the value that produces an output voltage closest to the input voltage. This code should be within one LSb of the input voltage.

The successive approximation analog-to-digital algorithm requires the following building blocks: a DAC, a comparator, and a method or apparatus to sequence successive writes to the DAC based on the comparator output. The SAR hardware accelerator represents a trade off between a fully automatic hardware sequencing approach and a pure firmware approach.

15.2.1.1 Architectural Description

The architectural description for the SAR hardware accelerator is illustrated in Figure 15-5.

Figure 15-5. SAR Hardware Accelerator

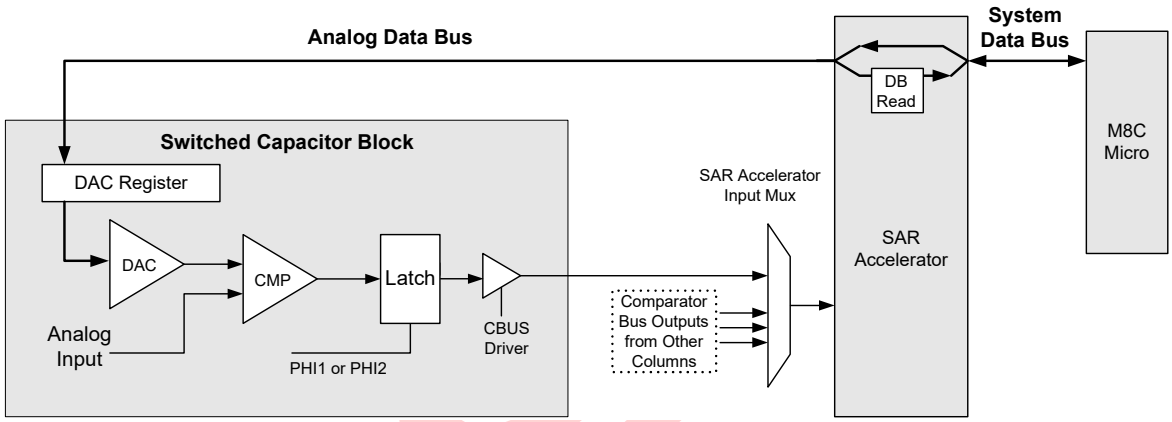

As shown in Figure 15-5, the SAR accelerator hardware is interfaced to the analog array through the comparator output and the analog array data bus. To create DAC output, values are written directly to the ACAP field in the DAC register. To facilitate the sequencing of the DAC writes in the SAR algorithm, the M8C is programmed to do a sequence of READ, MODIFY, and WRITE instructions. This is an atomic operation that consists of an I/O read (IOR) followed closely by an I/O write (IOW). One example of an assembly level instruction is as follows.

```
OR reg[DAC_REG],0
```

The effect of this instruction is to read the DAC register and follow it closely in time by a write back. The OR instruction does not modify the read data (it is ORed with ‘0’). The CPU does not need to do any additional computation in conjunction with this procedure. The SAR hardware transparently does the data modification during the read portion of the cycle. The only purpose for executing this instruction is to initiate a read that is modified by the SAR hardware, then to follow up with a write that transfers the data back to the DAC register.

During each I/O read operation, the SAR hardware overrides two bits of the data:

- To correct the previous bit guess based on the current comparator value.
- To set the next guess (next least significant bit).

The CPU latches this SAR modified data, OR’s it with ‘0’ (no CPU modification), and writes it back to the DAC register. A counter in the SAR hardware is used to decode which bits are being operated on in each cycle. In this way, the capability of the CPU and the IOR/IOW control lines are used to implement the read and write. Use the SAR accelerator hardware to make the decisions and to control the values written, achieving the optimal level of performance for the current system.

15.3 Register Definitions

The following registers are associated with the Analog Interface and are listed in address order. Each register description has an associated register table showing the bit structure for that register. For a complete table of analog interface registers, refer to the "Summary Table of the Analog Registers" on page 163.

The bits that are grayed out throughout this manual are reserved bits and are not detailed in the register descriptions that follow. Reserved bits should always be written with a value of '0'.

15.3.1 CMP_CR0 Register

Add.	Name	Bit 7	Bit 6	Bit 5	Bit 4	Bit 3	Bit 2	Bit 1	Bit 0	Access
0,64h	CMP_CR0			COMP[1:0]				AINT[1:0]		# : 00

#: Access is bit specific. Refer to the Register Details chapter on page 361.

The Analog Comparator Bus Register 0 (CMP_CR0) is used to poll the analog column comparator bits and select column interrupts.

This register contains two fields: COMP and AINT. By default, the interrupt is the comparator bit. A rising edge on a comparator bit causes an interrupt to be registered. However, if a bit in this field is set, the interrupt input for that column will be derived from the falling edge of PHI2 clock for that column (that is, the falling edge of PHI2 will leave a rising interrupt signal). Firmware can use this capability to synchronize to the current column clock.

Bits 5 to 4: COMP[x]. These bits are the read only bits corresponding to the comparator bits in each analog column. They are synchronized to the column clock, and thus may be reliably polled by the CPU.

Bits 1 to 0: AINT[x]. These bits select the interrupt source for each column, as the input to the interrupt controller.

For additional information, refer to the CMP_CR0 register on page 391.

OBSOLETE

15.3.2 ASY_CR Register

Add.	Name	Bit 7	Bit 6	Bit 5	Bit 4	Bit 3	Bit 2	Bit 1	Bit 0	Access
0,65h	ASY_CR		SARCNT[2:0]			SARSIGN	SARCOL[1:0]		SYNCEN	RW : 00

The Analog Synchronization Control Register (ASY_CR) is used to control SAR operation, except for bit 0, SYNCEN.

SYNCEN is associated with analog register write stalling and is described in "Analog Synchronization Interface (Stalling)" on page 168.

The SAR hardware accelerator is a block of specialized hardware designed to sequence the SAR algorithm for efficient analog-to-digital conversion. A SAR ADC is implemented conceptually with a DAC of the desired precision and a comparator. This functionality is configured from one or more PSoC blocks. For each conversion, the firmware should initialize the ASY_CR register and set the sign bit of the DAC as the first guess in the algorithm. A sequence of OR instructions (read, modify, write) to the ASxxxCR0 register is then executed. Each of these OR instructions causes the SAR hardware to read the current state of the comparator, checking the validity of the previous guess. It either clears it or leaves it set, accordingly. The next LSb in the DAC register is also set as the next guess. Six OR instructions will complete the conversion of a 6-bit DAC. The resulting DAC code, which matches the input voltage to within one LSb, is then read back from the ASxxxCR0 register.

Bits 6 to 4: SARCNT[2:0]. These bits are the SAR count value and are used to initialize a three-bit counter to sequence the six bits of the SAR algorithm. Typically, the user would initialize this register to '6'. When these bits are any value other than '0', a register read command to an SC block is assumed to be part of a SAR sequence.

Assuming the comparator bus output is programmed for column 0, a typical firmware sequence would be as follows.

```
mov  reg[ASY_CR], 60h  // SAR count value=6,
                       // Sign=0, Col=0
or reg[ASC10CR0], 0    // Check sign, set bit 4
or reg[ASC10CR0], 0    // Check bit 4, set bit 3
or reg[ASC10CR0], 0    // Check bit 3, set bit 2
or reg[ASC10CR0], 0    // Check bit 2, set bit 1
or reg[ASC10CR0], 0    // Check bit 1, set bit 0
or reg[ASC10CR0], 0    // Check bit 0
```

Bit 3: SARSIGN. This bit is the SAR sign selection and optionally inverts the comparator input to the SAR accelerator. It must be set based on the type of PSoC block configuration selected. Table 15-3 lists some typical examples.

Table 15-3. Typical PSOC Block Configurations

Configuration	Description	Sign
SAR6 – 2 blocks	1 DAC6, 1 COMP (could be CT)	0
SAR6 – 1 block	DAC6 and COMP in 1 block	1
MS SAR10 – 3 blocks	1 DAC9, 1 COMP (could be CT) (when processing MS DAC block)	0

Bits 2 and 1: SARCOL[1:0]. These bits are the column select for the SAR comparator input. The DAC portion of the SAR can reside in any of the appropriate positions in the analog PSOC block array. However, once the COMPARATOR block is positioned (and it is possible to have the DAC and COMPARATOR in the same block), this position should be the column selected.

Bit 0: SYNCEN. This bit is to synchronize CPU data writes to Switched Capacitor (SC) block operation in the analog array. The SC block clock is selected in the CLK_CR0 register. The selected clock source is divided by four and the output is a pair of two-phase, non-overlapping clocks: PHI1 and PHI2. There is an optimal time, with respect to the PHI1 and PHI2 clocks, to change the capacitor configuration in the SC block, which is typically the rising edge of PHI1. This is normally the time when the input branch capacitor is charging.

When this bit is set, any write to an SC block register is stalled until the rising edge of the next PHI1 clock phase, for the column associated with the SC block address. The stalling operation is implemented by suspending the CPU clock. No CPU activity occurs during the stall, including interrupt processing. Therefore, the effect of stalling on CPU throughput must be considered.

For additional information, refer to the ASY_CR register on page 392.

PRELIMINARY

15.3.3 CMP_CR1 Register

Add.	Name	Bit 7	Bit 6	Bit 5	Bit 4	Bit 3	Bit 2	Bit 1	Bit 0	Access
0,66h	CMP_CR1			CLDIS[1]	CLDIS[0]			CLK1X[1]	CLK1X[0]	RW : 00

The Analog Comparator Bus Register 1 (CMP_CR1) is used to override the analog column comparator synchronization.

Bits 5 to 4: CLDIS[x]. When these bits are set, the given column is not synchronized to PHI2 in the analog interface. This capability is typically used to allow a continuous time comparator result to propagate directly to the interrupt controller during sleep. Since the master clocks (except the 32 kHz clock) are turned off during sleep, the synchronizer must be bypassed.

Bits 1 and 0: CLK1X[1:0]. These bits are only used by the CY8C24x94 PSoC device. When these bits are set for a given column, the analog comparator synchronization is implemented using the direct 1X column clock, rather than the divide by 4 PHI2 clock. This allows for high frequency comparator sampling.

For additional information, refer to the CMP_CR1 register on page 393.

15.3.4 DEC_CR0 Register

Add.	Name	Bit 7	Bit 6	Bit 5	Bit 4	Bit 3	Bit 2	Bit 1	Bit 0	Access
0,E6h	DEC_CR0			IGEN[1:0]		ICLKS0	DCOL[1:0]		DCLKS0	RW : 00

The Decimator Control Register 0 (DEC_CR0) contains control bits to access hardware support for both the Incremental ADC and the DELISG ADC.

Bits 5 to 4: IGEN[3:0]. For incremental support, these bits select which column comparator bit will be gated by the output of a digital block. The output of that digital block is typically a PWM signal; the high time of which corresponds to the ADC conversion period. This ensures that the comparator output is only processed for the precise conversion time. The digital block selected for the gating function is controlled by ICLKS0 in this register, and ICLKS3, ICLKS2 and ICLKS1 bits in the DEC_CR1 register.

Bit 3: ICLKS0. In conjunction with ICLKS1, ICLKS2, and ICLKS3 in the DEC_CR1 register, these bits select up to one of 16 digital blocks (depending on the PowerPSoC device resources) to provide the gating signal for an incremental ADC conversion.

Bits 2 and 1: DCOL[1:0]. The DELSIG ADC uses the hardware decimator to do a portion of the post processing computation on the comparator signal. DCOL[1:0] selects the column source for the decimator data (comparator bit) and clock input (PHI clocks).

Bit 0: DCLKS0. The decimator requires a timer signal to sample the current decimator value to an output register that may subsequently be read by the CPU. This timer period is set to be a function of the DELSIG conversion time and may be selected from up to one of eight digital blocks (depending on the PowerPSoC device resources) with DCLKS0 in this register and DCLKS3, DCLKS2, and DCLKS1 in the DEC_CR1 register.

For additional information, refer to the DEC_CR0 register on page 460.

OBSOLETE

15.3.5 DEC_CR1 Register

Address	Name	Bit 7	Bit 6	Bit 5	Bit 4	Bit 3	Bit 2	Bit 1	Bit 0	Access
0,E7h	DEC_CR1		IDEC	ICLKS3	ICLKS2	ICLKS1	DCLKS3	DCLKS2	DCLKS1	RW : 00

The Decimator Control Register 1 (DEC_CR1) is used to configure the decimator prior to using it.

Bit 6: IDEC. Any function using the decimator requires a digital block timer to sample the current decimator value. Normally, the positive edge of this signal causes the decimator output to be sampled. However, when the IDEC bit is set, the negative edge of the selected digital block input causes the decimator value to be sampled.

Bits 5 to 0: ICLKSx and DCLKSx. The ICLKS3, ICLKS2, ICLKS1, DCLKS3, DCLKS2, and DCLKS1 bits in this register select the digital block sources for Incremental and DELSIGN ADC hardware support (see the DEC_CR0 register).

For additional information, refer to the DEC_CR1 register on page 462.

15.3.6 CLK_CR0 Register

Add.	Name	Bit 7	Bit 6	Bit 5	Bit 4	Bit 3	Bit 2	Bit 1	Bit 0	Access
1,60h	CLK_CR0					AColumn1[1:0]		AColumn0[1:0]		RW : 00

The Analog Clock Source Control Register 0 (CLK_CR0) is used to select the clock source for an individual analog column.

An analog column clock generator is provided for each column. The bits in this register select the source for each column clock generator. Regardless of the source selected, the input clock is divided by four to generate the PHI1/PHI2 nonoverlapping clocks for the column.

There are four selections for each clock: VC1, VC2, ACLK0, and ACLK1. VC1 and VC2 are the programmable global system clocks. ACLK0 and ACLK1 sources are each selected from up to one of eight digital block outputs (functioning as clock generators), for four and two analog column devices, and up to one of four digital block outputs (functioning as clock generators), for one analog column device as selected by CLK_CR1.

Bits 3 and 2: AColumn1[1:0]. These bits select the source for analog column 1.

Bits 1 and 0: AColumn0[1:0]. These bits select the source for analog column 0.

For additional information, refer to the CLK_CR0 register on page 479.

OBSOLETE

15.3.7 CLK_CR1 Register

Add.	Name	Bit 7	Bit 6	Bit 5	Bit 4	Bit 3	Bit 2	Bit 1	Bit 0	Access
1,61h	CLK_CR1		SHDIS	ACLK1[2:0]			ACLK0[2:0]			RW : 00

The Analog Clock Source Control Register 1 (CLK_CR1) is used to select the clock source for an individual analog column.

Bit 6: SHDIS. The SHDIS bit functions as follows. During normal operation of an SC block, for the amplifier of a column enabled to drive the output bus, the connection is only made for the last half of PHI2. (During PHI1 and for the first half of PHI2, the output bus floats at the last voltage to which it was driven.) This forms a sample and hold operation using the output bus and its associated ***capacitance***. This design prevents the output bus from being perturbed by the intermediate states of the SC operation (often a reset state for PHI1 and settling to the valid state during PHI2).

The following are the exceptions: 1) If the ClockPhase bit in ASCxx_CR0 (for the SC block in question) is set to '1', then the output is enabled if the analog bus output is enabled during both PHI1 and PHI2. 2) If the SHDIS signal is set in bit 6 of the Analog Clock Source Control register, then sample and hold operation is disabled for all columns and all enabled outputs of SC blocks are connected to their respective output buses, for the entire period of their respective PHI2s.

Bits 5 to 0: ACLKx[2:0]. There are two 3-bit fields in this register that can select up to one of eight digital blocks (depending on the PowerPSoC device resources), to function as the clock source for ACLK0 and ACLK1. ACLK0 and ACLK1 are alternative clock inputs to the analog column clock generators (see the CLK_CR0 register above).

For additional information, refer to the CLK_CR1 register on page 480.

15.3.8 AMD_CR0 Register

Add.	Name	Bit 7	Bit 6	Bit 5	Bit 4	Bit 3	Bit 2	Bit 1	Bit 0	Access
1,63h	AMD_CR0						AMOD0[2:0]			RW : 00

The Analog Modulation Control Register 0 (AMD_CR0) is used to select the modulator bits used with each column.

The MODBIT is an input into an Switched Capacitor C Type block only and is XOR'ed with the currently programmed value of the ASIGN bit in the CR0 register for that SC block. This allows the ACAP sign bit to be dynamically modulated by hardware signals. Three bits for each column allow a one of eight selection for the MODBIT. Sources include any of the analog column comparator buses, two global buses, and one broadcast bus. The default for this function is zero or off.

Bits 2 to 0: AMOD0[2:0]. These bits control the selection of the MODBITs for analog column 0.

For additional information, refer to the AMD_CR0 register on page 483.

OBSOLETE

15.3.9 CMP_GO_EN Register

Address	Name	Bit 7	Bit 6	Bit 5	Bit 4	Bit 3	Bit 2	Bit 1	Bit 0	Access
1,64h	CMP_GO_EN	GOO5	GOO1	SEL1[1:0]		GOO4	GOO0	SEL0[1:0]		RW : 00

The Comparator Bus to Global Outputs Enable Register (CMP_GO_EN) controls options for driving the analog comparator bus and column clock to the global bus.

Bit 7: GOO5. This bit drives the selected column 1 signal to GOO5.

Bit 6: GOO1. This bit drives the selected column 1 signal to GOO1.

Bits 5 and 4: SEL1[1:0]. These bits select the column 1 signal to output.

Bit 3: GOO4. This bit drives the selected column 0 signal to GOO4.

Bit 2: GOO0. This bit drives the selected column 0 signal to GOO0.

Bits 1 and 0: SEL0[1:0]. These bits select the column 0 signal to output.

For additional information, refer to the CMP_GO_EN register on page 484.

15.3.10 AMD_CR1 Register

Add.	Name	Bit 7	Bit 6	Bit 5	Bit 4	Bit 3	Bit 2	Bit 1	Bit 0	Access
1,66h	AMD_CR1						AMOD1[2:0]			RW : 00

The Analog Modulation Control Register 1 (AMD_CR1) is used to select the modulator bits used with each column.

The MODBIT is an input into an Switched Capacitor Type C block only and is XOR'ed with the currently programmed value of the ASIGN bit in the CR0 register for that SC block. This allows the ACAP sign bit to be dynamically modulated by hardware signals. Three bits for each column allow a one of eight selection for the MODBIT. Sources include any of the analog column comparator buses, two global buses, and one broadcast bus. The default for this function is zero or off.

Bits 2 to 0: AMOD1[2:0]. These bits control the selection of the MODBITs for analog column 1.

For additional information, refer to the AMD_CR1 register on page 485.

OBSOLETE

15.3.11 ALT_CR0 Register

Add.	Name	Bit 7	Bit 6	Bit 5	Bit 4	Bit 3	Bit 2	Bit 1	Bit 0	Access
1,67h	ALT_CR0	LUT1[3:0]				LUT0[3:0]				RW : 00

The Analog LUT Control Register 0 (ALT_CR0) is used to select the logic function.

A one of 16 lookup table (LUT) is applied to the outputs of each column comparator bit and optionally a neighbor bit to implement two input logic functions.

Table 15-1 shows the available functions, where the A input applies to the selected column and the B input applies to the next most significant neighbor column. Column 0 settings apply to combinations of column 0 and column 1. Column 1 settings apply to combinations of column 1 and column 2, where B=0 for one column PowerPSoC devices.

Bits 7 to 4: LUT1[3:0]. These bits control the selection of the LUT 1 logic functions that may be selected for the analog comparator bits in column 0 (for two and four column PowerPSoC devices only) and column 1.

Bits 3 to 0: LUT0[3:0]. These bits control the selection of LUT 0 logic functions that may be selected for the analog comparator bits in column 0 (for two and four column PowerPSoC devices only) and column 1.

For additional information, refer to the ALT_CR0 register on page 486.

15.3.12 ALT_CR1 Register

Add.	Name	Bit 7	Bit 6	Bit 5	Bit 4	Bit 3	Bit 2	Bit 1	Bit 0	Access
1,68h	ALT_CR1	LUT3[3:0]				LUT2[3:0]				RW : 00

The Analog LUT Control Register 1 (ALT_CR1) is used to select the logic function performed by the LUT for each analog column.

Bits 7 to 4: LUT3[3:0]. These bits control the selection of the LUT 3 logic functions that may be selected for the analog comparator bits.

Bits 3 to 0: LUT2[3:0]. These bits control the selection of LUT 2 logic functions that may be selected for the analog comparator bits.

For additional information, refer to the ALT_CR1 register on page 488.

15.3.13 CLK_CR2 Register

Add.	Name	Bit 7	Bit 6	Bit 5	Bit 4	Bit 3	Bit 2	Bit 1	Bit 0	Access
1,69h	CLK_CR2					ACLK1R			ACLK0R	RW : 00

The Analog Clock Source Control Register 2 (CLK_CR2), in conjunction with the CLK_CR1 and CLK_CR0 registers, selects a digital block as a source for analog column clocking.

Bit 3: ACLK1R. This bit selects bank one of eight digital blocks and is only used in devices with more than eight digital blocks.

Bit 0: ACLK0R. This bit selects bank zero of eight digital blocks and is only used in devices with more than eight digital blocks.

For additional information, refer to the CLK_CR2 register on page 489.

OBSOLETE

16. Analog Array

This chapter presents the Analog Array, which has no registers directly associated with it. This chapter is important because it discusses the block and column level interconnects that exist in the analog PSoC array.

16.1 Architectural Description

The analog array is designed to allow interaction between PSoC devices without modifying projects, except for resource limitations.

Refer to the table at the beginning of the Analog System section, on page 161, to determine how many columns of analog PSoC blocks a particular PowerPSoC device has. The figures that follow illustrate the analog multiplexer (mux) connections for the various PowerPSoC devices, which vary depending on column availability.

Figure 16-1 displays the various analog arrays, depending on the column configuration of the PowerPSoC device. Each analog column has 3 analog blocks associated with it. In the figures throughout this chapter, shading and call outs portray the different column configurations that are available in a PowerPSoC device.

Figure 16-1. Array of Analog PSoC Blocks

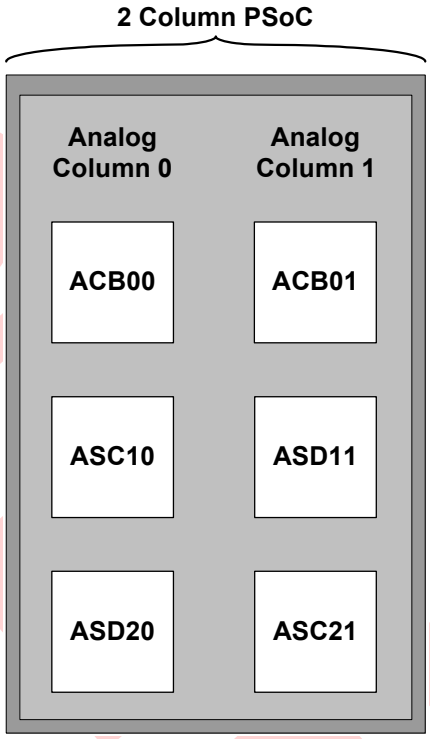

OBSOLETE

16.1.1 NMux Connections

The NMux is an 8-to-1 mux which determines the source for the inverting (also called negative) input of Continuous Time PSoC blocks. These blocks are named ACB00 and ACB01. More details on the Continuous Time PSoC blocks are available in the chapter Continuous Time PSoC Block, on page 193. The NMux connections are described in detail in the ACBxxCR1 register on page 402, bits NMux[2:0].

The numbers in Figure 16-2, which are associated with each arrow, are the corresponding NMux select line values for the data in the NMux portion of the register. The call out names in the figure show nets selected for each NMux value.

Figure 16-2. NMux Connections

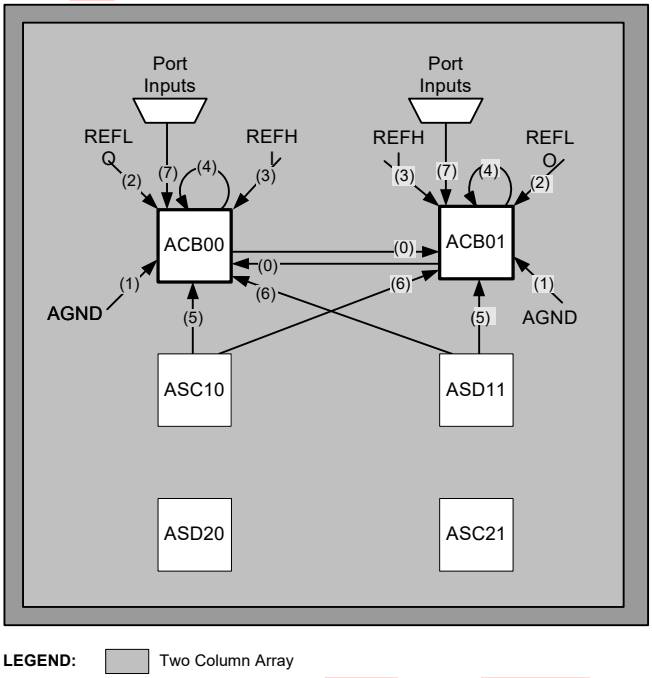

OBSOLETE

16.1.2 PMux Connections

The PMux is an 8-to-1 mux which determines the source for the non-inverting (also called positive) input of Continuous Time PSoC blocks. These blocks are named ACB00 and ACB01. More details on the Continuous Time PSoC blocks are available in the chapter Continuous Time PSoC Block, on page 193. The PMux connections are described in detail in the ACBxxCR1 register on page 402, bits PMux[2:0].

The numbers in Figure 16-3, which are associated with each arrow, are the corresponding PMux select line values for the data in the PMux portion of the register. The call out names in the figure show nets selected for each PMux value.

Figure 16-3. PMux Connections

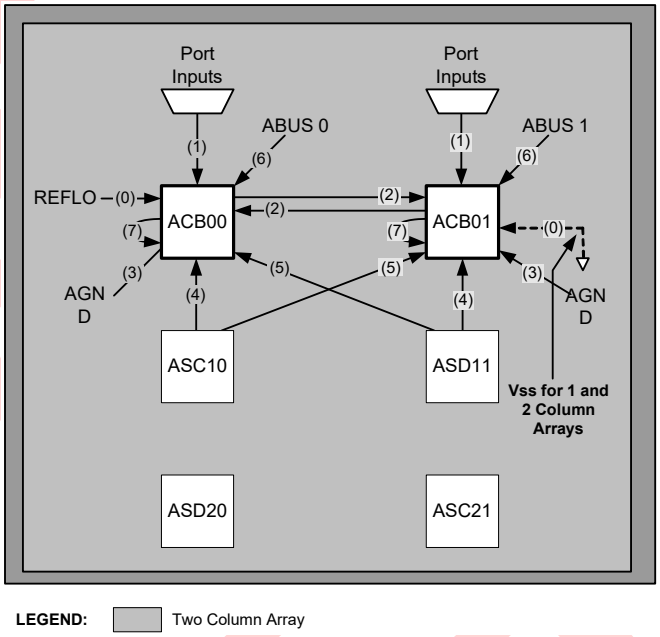

16.1.3 RBotMux Connections

The RBotMux connections in the figure below are the mux inputs for the bottom of the resistor string, see Figure 19-1 on page 194. The RBotMux connections are used in the Continuous Time PSoC blocks. These blocks are named ACB00 and ACB01. The RBotMux connections are described in detail in the ACBxxCR0 register on page 400, bits RBotMux[1:0].

The numbers in Figure 16-4, which are associated with each arrow, are the corresponding RBotMux select line values for the data in the RBotMux portion of the register. The call out names in the figure show nets selected for each RBotMux value.

The logic statements in Figure 16-4 are the RBotMux connections that are selected by the combination of the RBotMux bits (ACB0xCR0 bits 1 and 0) and the INSAMP bit (ACB0xCR3 bit 1). For example, the RBotMux selects a connection to AGND, if the INSAMP bit is low and the RBotMux bits are 01b. This is shown in the figure as the logic statement $INSAMP \cdot (RB = 1)$.

Figure 16-4. RBotMux Connections

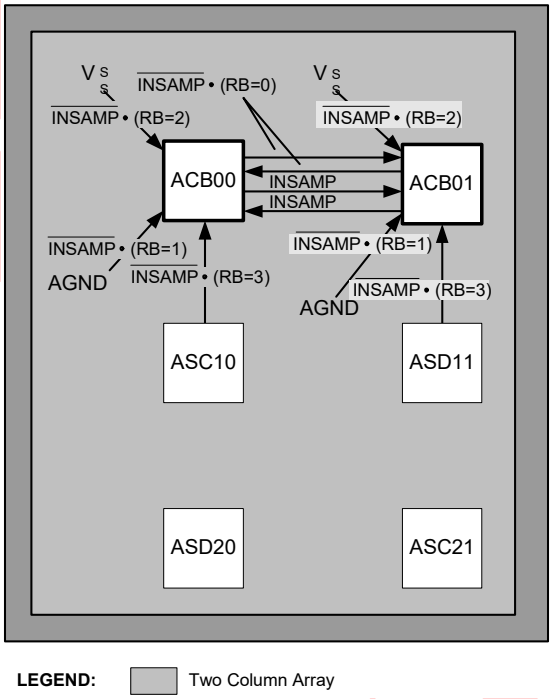

OBSOLETE

16.1.4 AMux Connections

The AMux connections in the figure below are the mux inputs for controlling both the A and C capacitor branches. The high order bit, ACMux[2], selects one of two inputs for the C branch, which is used to control both the AMux and CMux. (See the A inputs in Figure 20-1 on page 200 and Figure 20-2 on page 201.) The AMux connections are used in the Switched Capacitor PSoC blocks. These blocks are named ASC10, ASD11, ASD20, and ASC21. The AMux connections are described in detail in the ASCxxCR1 register on page 410, bits ACMux[2:0], and ASDxxCR1 register on page 414, bits AMux[2:0].

The numbers in Figure 16-5, which are associated with each arrow, are the corresponding AMux select line values for the data in the ACMux portion of the register. The call out names in the figure show nets selected for each AMux value.

Figure 16-5. AMux Connections

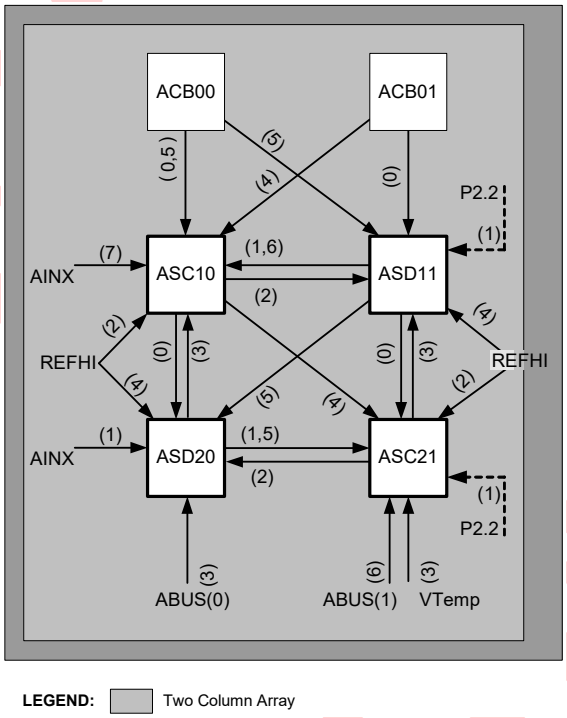

16.1.5 CMux Connections

The CMux connections in the figure below are the mux inputs for controlling the C capacitor branches. The high order bit, ACMux[2], selects one of two inputs for the C branch, which is used to control both the AMux and CMux. (See the C inputs in Figure 20-1 on page 200.) The CMux connections are used in the Switched Capacitor PSoC blocks. These blocks are named ASC10 and ASC21.

The CMux connections are described in detail in the ASCxx-CR1 register on page 410, bits ACMux[2:0]. The numbers in the figure, which are associated with each arrow, are the corresponding CMux select line values for the data in the CMux portion of the register. The call out names in the figure show nets selected for each CMux value.

Figure 16-6. CMux Connections

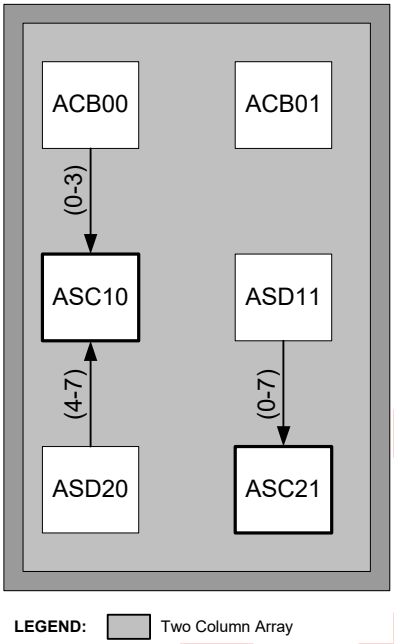

OBSOLETE

16.1.6 BMux SC/SD Connections

The BMux SC/SD connections in the figure below are the mux inputs for controlling the B capacitor branches. (See Figure 20-1 on page 200 and Figure 20-2 on page 201.) The BMux SC/SD connections are used in the Switched Capacitor PSoC blocks. These blocks are named ASC10, ASD11, ASD20, and ASC21. The BMux connections are described in detail in the ASCxxCR3 register on page 412, bits BMuxSC[1:0], and ASDxxCR3 register on page 416, bit BMuxSD[2].

The numbers in Figure 16-7, which are associated with each arrow, are the corresponding BMux select line values for the data in the BMux portion of the register. The call out names in the figure show nets selected for each BMux value.

Figure 16-7. BMux SC/SD Connections

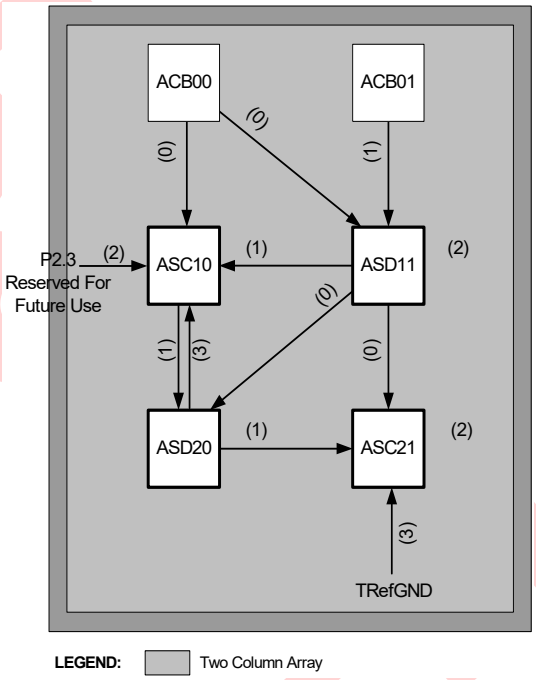

16.1.7 Analog Comparator Bus

Each analog column has a dedicated comparator bus associated with it. Every analog PSoC block has a comparator output that can drive out on this bus. However, the comparator output from only one analog block in a column can be actively driving the comparator bus for that column at any one time. Refer to the "Analog Comparator Bus Interface" on page 166 in the Analog Interface chapter for more information.

16.2 Temperature Sensing Capability

A temperature-sensitive voltage, derived from the bandgap sensing on the die, is buffered and available as an analog input into the Analog Switch Cap Type C block ASC21. Temperature sensing allows protection of device operating ranges for fail-safe applications. Temperature sensing, combined with a long sleep timer interval (to allow the die to approximate ***ambient temperature***), can give an approximate ambient temperature for data acquisition and battery charging applications. The user may also calibrate the internal temperature rise based on a known current consumption. The temperature sensor input to the ASC21 block is labeled VTemp and its associated ground reference is labeled TRefGND.

OBSOLETE

17. Analog Input Configuration

This chapter discusses the Analog Input Configuration and its associated registers. For a complete table of analog input configuration registers, refer to the "Summary Table of the Analog Registers" on page 163. For a quick reference of all PowerPSoC registers in address order, refer to the Register Details chapter on page 361.

17.1 Architectural Description

The CY8CLED0xx0x PowerPSoC device family uses the 2 Column PSoC Device analog input configuration and arrays as illustrated in Figure 17-1.

Figure 17-2 presents a more detailed view of each analog column configuration for the CY8CLED0xx0x, along with their analog driver and pin specifics.

The input multiplexer (mux) maps device inputs (package pins) to analog array columns, based on bit values in the AMX_IN and ABF_CR0 registers.

Refer to the analog block diagram on the following page to view the various analog input configurations. The CY8CLED0xx0x devices have two analog drivers used to output analog values on port pins P0[5] and P0[3].

Figure 17-1. Analog Input Configuration Column Overview

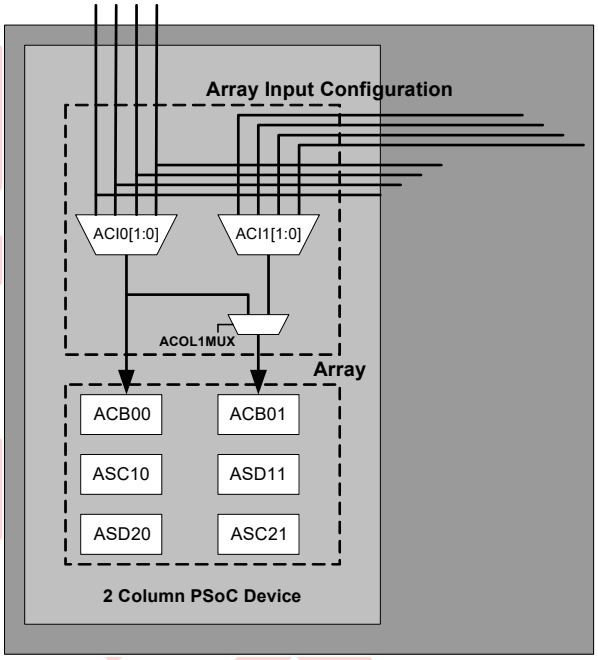

OBSOLETE

17.1.1 Two Column Analog Input Configuration

The two column analog input configuration is detailed in Figure 17-2, along with the analog driver and pin specifics.

Figure 17-2. Two Column PSoC Analog Pin Block Diagram

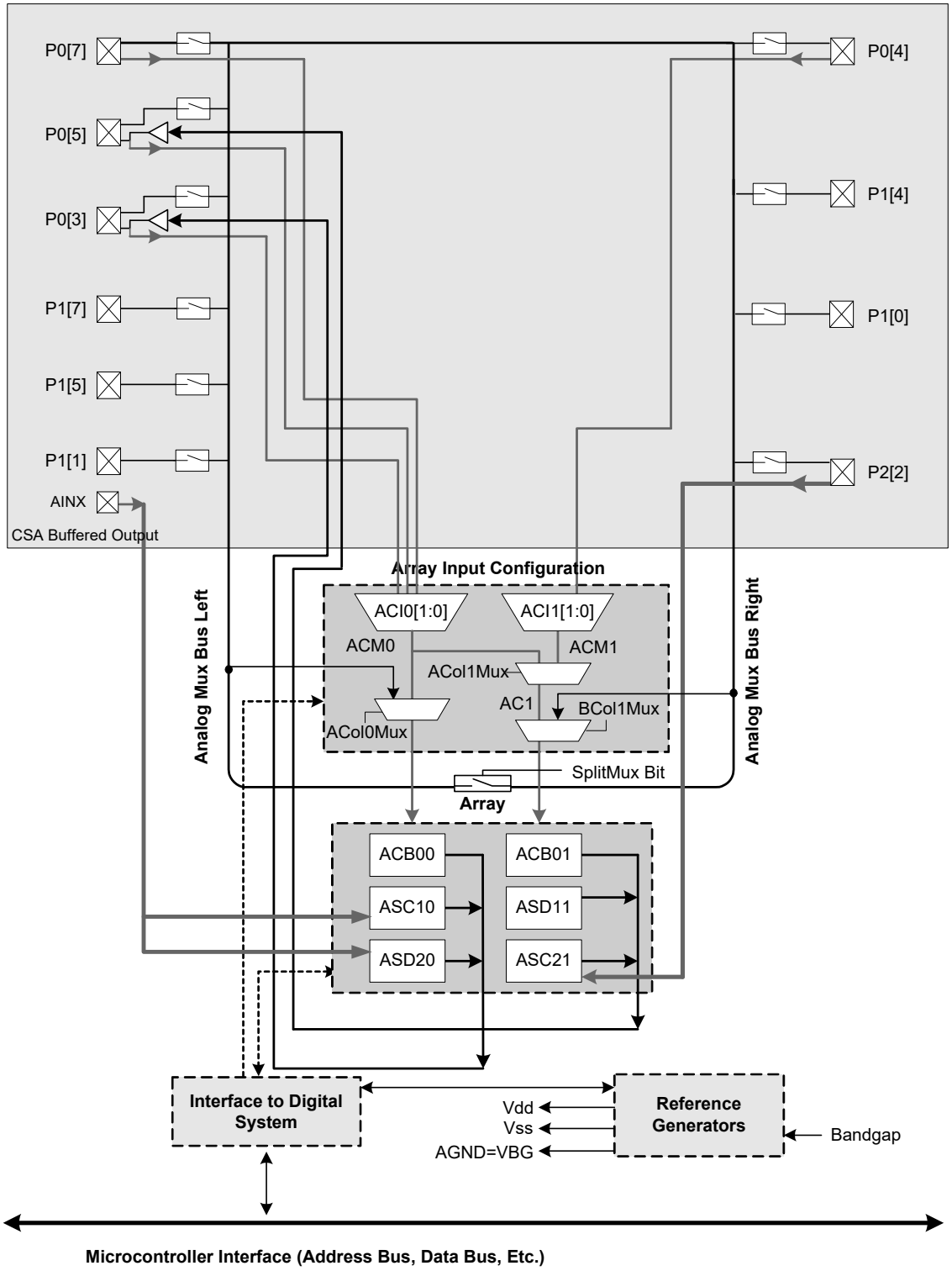

17.2 Register Definitions

The following registers are associated with Analog Input Configuration and are listed in address order. Each register description has an associated register table showing the bit structure for that register. For a complete table of the analog input configuration registers, refer to the "Summary Table of the Analog Registers" on page 163.

The bits that are grayed out throughout this manual are reserved bits and are not detailed in the register descriptions that follow. Reserved bits should always be written with a value of '0'.

17.2.1 AMX_IN Register

Add.	Name	Bit 7	Bit 6	Bit 5	Bit 4	Bit 3	Bit 2	Bit 1	Bit 0	Access
0,60h	AMX_IN					ACI1[1:0]		ACI0[1:0]		RW : 0

The Analog Input Select Register (AMX_IN) controls the analog muxes that feed signals in from port pins into the analog column.

Bits 3 to 0: ACIx[1:0].

For two column PowerPSoC devices, the ACI1[1:0] and ACI0[1:0] bits control the analog muxes that feed signals in from port pins into the analog column. The analog column can have up to eight port bits connected to its muxed input. ACI1 and ACI0 are used to select among even and odd pins. The AC1Mux bit field controls the bits for those muxes and is located in the Analog Output Buffer Control register (ABF_CR0). There are up to two additional analog inputs that go directly into the Switch Capacitor PSoC blocks.

For additional information, refer to the AMX_IN register on page 388.

17.2.2 ABF_CR0 Register

Add.	Name	Bit 7	Bit 6	Bit 5	Bit 4	Bit 3	Bit 2	Bit 1	Bit 0	Access
1,62h	ABF_CR0	ACol1Mux		ABUF1EN		ABUF0EN		Bypass	PWR	RW : 00

The Analog Output Buffer Control Register 0 (ABF_CR0) controls analog input muxes from Port 0 and the output buffer amplifiers that drive column outputs to device pins.

Bit 7: ACol1MUX. A mux selects the output of column 0 input mux or column 1 input mux. When set, this bit sets the column 1 input to column 0 input mux output.

Bits 5, 3: ABUFxEN. These bits enable or disable the column output amplifiers.

Bit 1: Bypass. Bypass mode connects the analog output driver input directly to the output. When this bit is set, all analog output drivers will be in bypass mode. This is a high impedance connection used primarily for measurement and calibration of internal references. Use of this feature is not recommended for customer designs.

Bit 0: PWR. This bit is used to set the power level of the analog output drivers. When this bit is set, all of the analog output drivers will be in a High Power mode.

For additional information, refer to the ABF_CR0 register on page 481.

OBSOLETE

OBSOLETE

18. Analog Reference

This chapter discusses the Analog Reference generator and its associated register. The reference generator establishes a set of three internally fixed reference voltages for AGND, RefHi, and RefLo. For a quick reference of all PowerPSoC registers in address order, refer to the Register Details chapter on page 361.

18.1 Architectural Description

The PowerPSoC device is a single supply part, with no negative voltage available or applicable. Figure 18-1shows the analog reference control schematic.

Analog ground (AGND) is constructed near mid-supply. This ground is routed to all analog blocks and separately buffered within each block. Note that there may be a small offset voltage between buffered analog grounds. RefHi and RefLo signals are generated, buffered, and routed to the analog blocks. RefHi and RefLo are used to set the conversion range (that is, span) of ***analog-to-digital (ADC)*** and ***digital-to-analog (DAC)***) converters. RefHi and RefLo can also be used to set thresholds in comparators for four and two column PowerPSoC devices.

The reference array supplies voltage to all blocks and current to the Switched Capacitor blocks. At higher block clock rates, there is increased reference current demand; the reference power should be set equal to the highest power level of the analog blocks used.

Figure 18-1. Analog Reference Structure

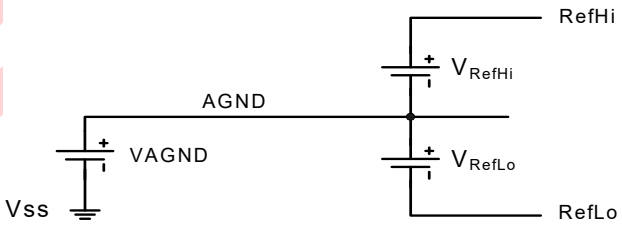

Figure 18-2. Analog Reference Control Schematic

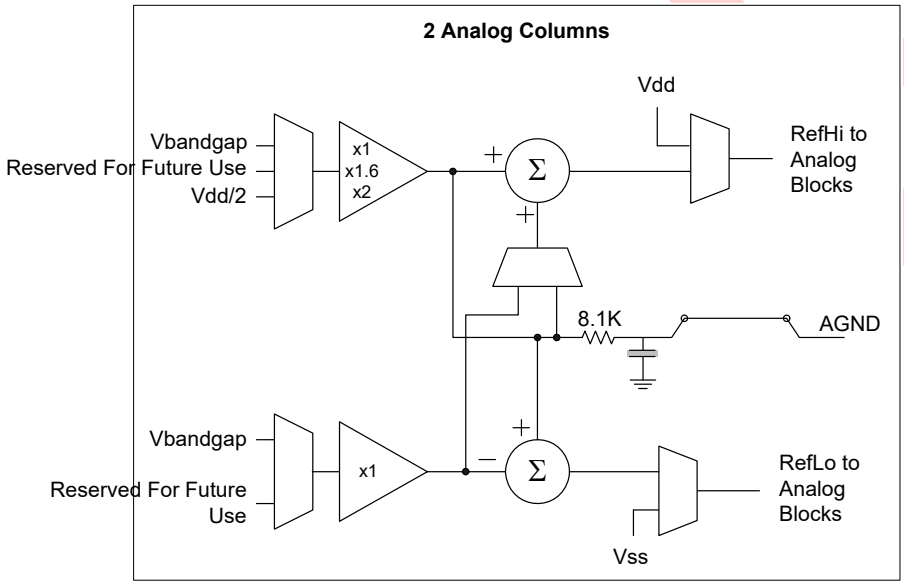

OBSOLETE

18.2 Register Definitions

The following register is associated with the Analog Reference. For a complete table of all analog registers, refer to the "Summary Table of the Analog Registers" on page 163.

The register description below has an associated register table showing the bit structure. The bits that are grayed out throughout this manual are reserved bits and are not detailed in the register description that follows. Reserved bits should always be written with a value of '0'.

18.2.1 ARF_CR Register

Add.	Name	Bit 7	Bit 6	Bit 5	Bit 4	Bit 3	Bit 2	Bit 1	Bit 0	Access
0,63h	ARF_CR		HBE	REF[2:0]			PWR[2:0]			RW : 00

The Analog Reference Control Register (ARF_CR) is used to configure various features of the configurable analog references. When selecting AGND using the REF[2:0] analog array reference control, CT/SC blocks should be turned on by setting PWR[2:0].

Bit 6: HBE. This bit controls the ***bias*** level for all the opamps. It operates with the power setting in each block, to set the parameters of that block. Most applications will benefit from the low bias level. At high bias, the analog block opamps have a faster slew rate, but slightly less voltage swing and higher power.

Bits 5 to 3: REF[2:0]. REF (AGND, RefHI, and RefLO) sets the analog array reference control, selecting specific combinations of voltage for analog ground and references. Many of these reference voltages are based on the precision internal reference, a silicon bandgap operating at 1.30 volts. This reference has good thermal stability and power supply rejection.

Alternatively, the power supply can be scaled to provide analog ground and references; this is particularly useful for signals which are ratiometric to the power supply voltage. See Table 18-2.

Bits 2 to 0: PWR[2:0]. PWR controls the bias current and bandwidth for all of the opamps in the analog reference block. PWR also provides on/off control in various rows of the analog array. When selecting AGND using the REF[2:0] analog array reference control, CT/SC blocks should be turned on by setting PWR[2:0].

Table 18-1. Analog Array Power Control Bits

PWR[2:0]	CT Row	Both SC Rows	REF Bias
000b	Off	Off	Off
001b	On	Off	Low
010b	On	Off	Medium
011b	On	Off	High
100b	Off	Off	Off
101b	On	On	Low
110b	On	On	Medium
111b	On	On	High

For additional information, refer to the ARF_CR register on page 390.

OBSOLETE

Table 18-2. REF[2:0]: AGND, RefHI, and RefLO Operating Parameters for Column PowerPSoC Devices

REF [2:0]	AGND		RefHI		RefLO		Notes
	Source	Voltage	Source	Voltage	Source	Voltage	
000b	Vdd/2	2.5V	Vdd/2+Vbg	3.8V	Vdd/2-Vbg	1.2V	5.0V System
001b	Invalid Reference	2.2V	Invalid Reference	3.2V	Invalid Reference	1.2V	
010b	Vdd/2	2.5V	Vdd	5.0V	Vss	0.0V	5.0V System
011b	2Vbg	2.6V	3Vbg	3.9V	1Vbg	1.3V	
100b	2Vbg	2.6V	2Vbg+P2[6]	3.6V	2Vbg-P2[6]	1.6V	P26 < Vdd - 2.6. Example: P2[6]=1.0V
101b	Reserved	Reserved	Reserved	Reserved	Reserved	Reserved	
110b	Vbg	1.30V	2Vbg	2.6V	Vss	0	5.0V System
111b	1.6Vbg	2.08V	3.2*Vbg	4.16V	Vss	0	

OBSOLETE

OBSOLETE

19. Continuous Time PSoC Block

This chapter discusses the Analog Continuous Time PSoC Block and its associated registers. This block supports programmable ***gain*** or ***attenuation*** opamp circuits; instrumentation amplifiers, using two CT blocks (differential gain); and modest response-time analog comparators. For a complete table of the Continuous Time PSoC Block registers, refer to the "Summary Table of the Analog Registers" on page 163. For a quick reference of all PowerPSoC registers in address order, refer to the Register Details chapter on page 361.

19.1 Architectural Description

The Analog Continuous Time blocks are built around a rail-to-rail input and output, low offset, low ***noise*** opamp. There are several analog multiplexers (muxes) controlled by register bit settings in the control registers that determine the signal topology inside the block. There is also a precision resistor string located in the feedback path of the opamp which is controlled by register bit settings.

The block also contains a low power comparator, connected to the same inputs and outputs as the main amplifier. This comparator is useful for providing a digital compare output in low power sleep modes, when the main amplifier is powered off.

There are three discrete outputs from this block. These outputs connect to the following buses:

1. The analog output bus (ABUS), which is an analog bus resource shared by all of the analog blocks in the analog column. This signal may also be routed externally through an output buffer.
2. The comparator bus (CBUS), which is a digital bus resource shared by all of the analog blocks in the analog column.
3. The local output buses (OUT, GOUT, and LOUT), which are routed to neighboring blocks. GOUT and LOUT refer to the gain/loss mode configuration of the block and connect to GIN/LIN inputs of neighboring blocks.

OBSOLETE

Figure 19-1. Analog Continuous Time Block Diagram

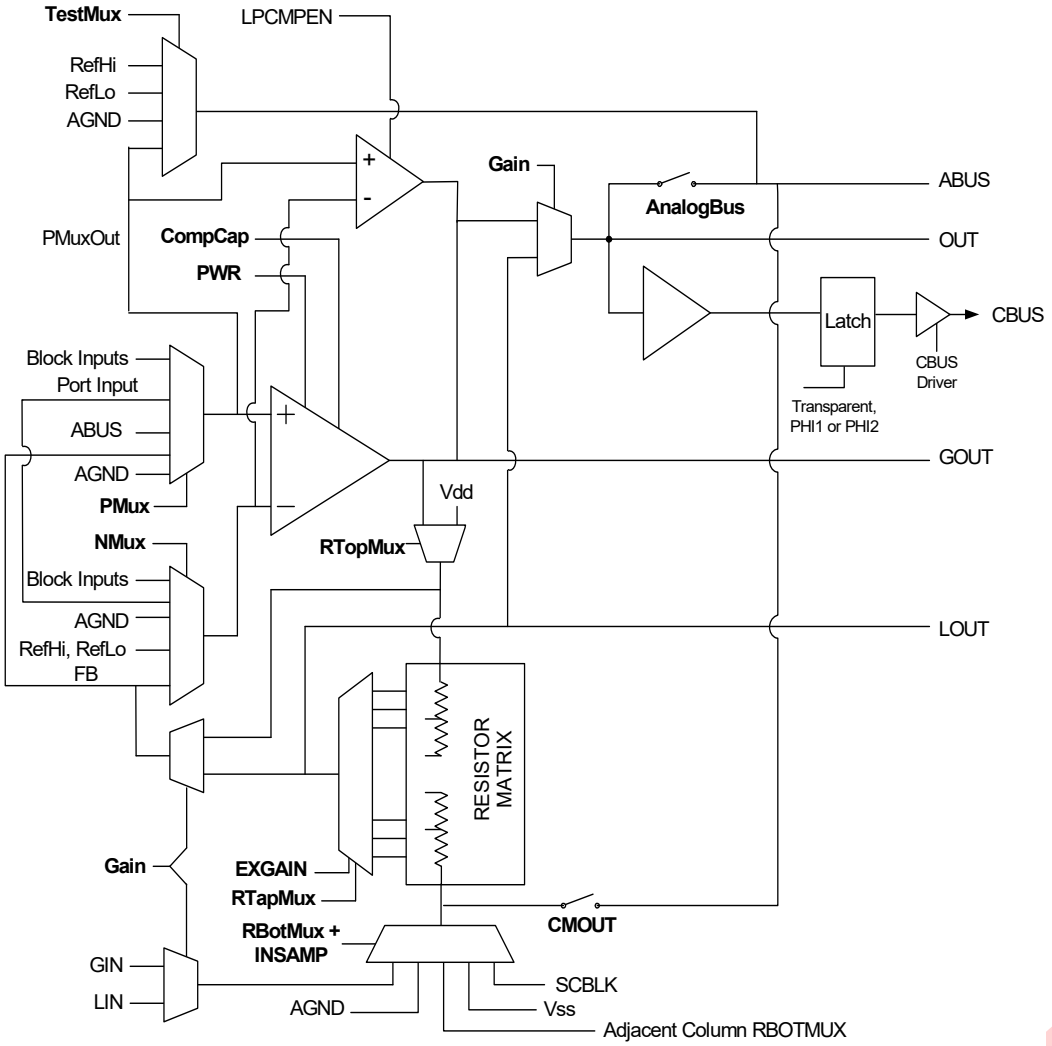

19.2 Register Definitions

The following registers are associated with the Continuous Time (CT) PSoC Block and are listed in address order. Each register description has an associated register table showing the bit structure for that register. For a complete table of the CT PSoC Block registers, refer to the “Summary Table of the Analog Registers” on page 163.

The bits that are grayed out throughout this manual are reserved bits and are not detailed in the register descriptions that follow. Reserved bits should always be written with a value of ‘0’.

In the tables below, an “x” before the comma in the address field (in the “Add.” column) indicates that the register exists in both register banks. The register naming convention for arrays of PSoC blocks and their registers is <Prefix>mn<Suffix>, where m=row index and n=column index. Therefore, ACB01CR2 is a register for an analog PSoC block in row 0 column 1.

19.2.1 ACBxxCR3 Register

Add.	Name	Bit 7	Bit 6	Bit 5	Bit 4	Bit 3	Bit 2	Bit 1	Bit 0	Access
x,70h	ACB00CR3					LPCMPEN	CMOUT	INSAMP	EXGAIN	RW : 0
x,74h	ACB01CR3					LPCMPEN	CMOUT	INSAMP	EXGAIN	RW : 0

LEGEND
x An “x” before the comma in the address field indicates that the register exists in both register banks.

The Analog Continuous Time Type B Block Control Register 3 (ACBxxCR3) is one of four registers used to configure a type B continuous time PSoC block.

The analog array can be used to build two different forms of instrumentation amplifiers. Two continuous time blocks combine to make the two-opamp instrumentation amplifier illustrated in Figure 19-2.

Two continuous time blocks and one switched capacitor block combine to make a three-opamp instrumentation amplifier (see Figure 19-3).

The three-opamp instrumentation amplifier handles a larger common mode input range but takes more resources. Bit 2 (CMOUT) and bit 1 (INSAMP) control switches are involved in the three-opamp instrumentation amplifier.

Bit 3: LPCMPEN. Each continuous time block has a low power comparator connected in ***parallel*** with the block’s main opamp/comparator. The low power comparator is used in applications where low power is more important than low noise and low offset. The low power comparator operates when the LPCMPEN bit is set high. Since the main opamp/comparator’s output is connected to the low power comparator’s output, only one of the comparators should be active at a particular time. The main opamp/comparator is powered down by setting ACBxxCR2: PWR[1:0] to 00b, or setting ARF_CR: PWR[2:0] to x00b. The low power comparator is unaffected by the PWR bits in the ACBxxCR2 and ARF_CR registers.

Figure 19-2. Two-Opamp Instrumentation Amplifier

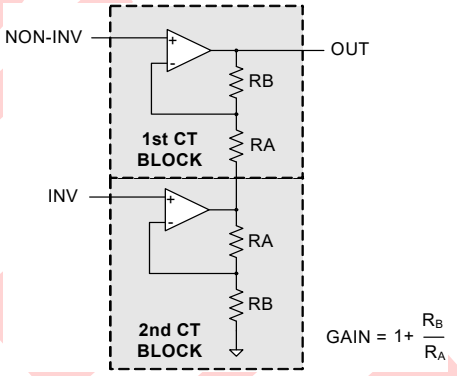

Bit 2: CMOUT. If this bit is high, then the node formed by the connection of the resistors, between the continuous time blocks, is connected to that continuous time block’s ABUS. This node is the common mode of the inputs to the instrumentation amplifier. The CMOUT bit is optional for the three-opamp instrumentation amplifier.

Bit 1: INSAMP. This bit is used to connect the resistors of two continuous time blocks as part of a three-opamp instrumentation amplifier. The INSAMP bit must be high for the three-opamp instrumentation amplifier (see Figure 19-3).

Figure 19-3. Three-Opamp Instrumentation Amplifier

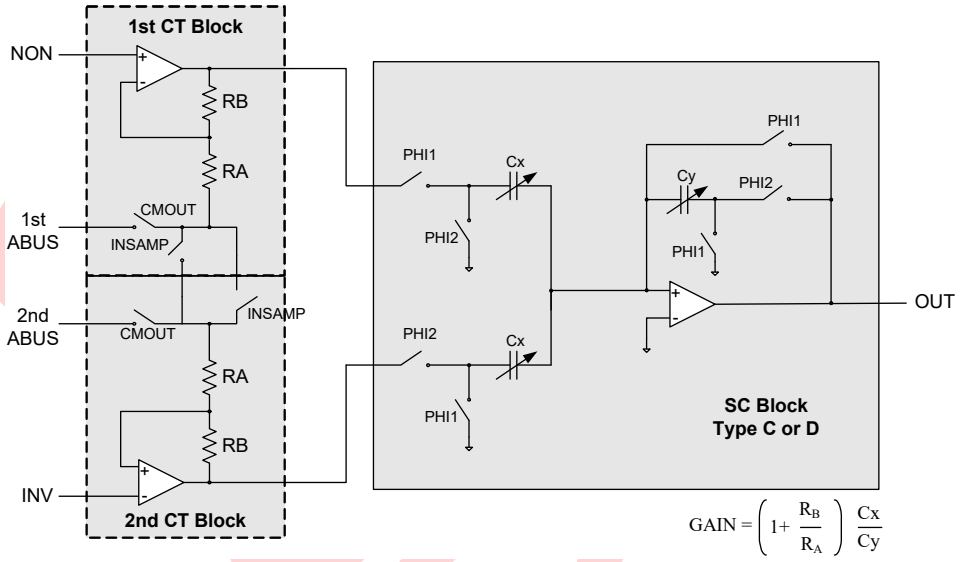

Bit 0: EXGAIN. The continuous time block's resistor tap is specified by the value of ACBxxCR3 EXGAIN, combined with the value of ACBxxCR0 RtapMux[3:0]. For RtapMux values from 02h through 15h, the EXGAIN bit has no effect on which tap is selected. (See the ACBxxCR0 register for details.) The EXGAIN bit enables additional resistor tap selections for RtapMux = 01h and RtapMux = 00h (see Figure 19-4).

For additional information, refer to the ACBxxCR3 register on page 399.

Figure 19-4. CT Block in Gain Configuration

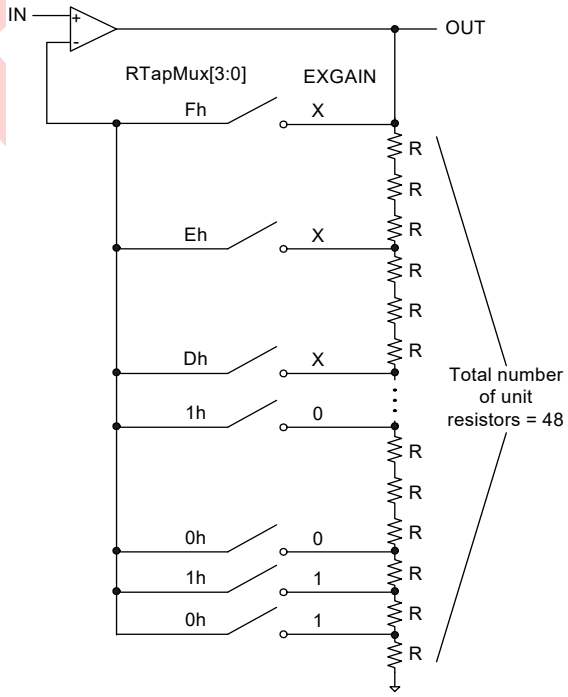

19.2.2 ACBxxCR0 Register

Add.	Name	Bit 7	Bit 6	Bit 5	Bit 4	Bit 3	Bit 2	Bit 1	Bit 0	Access
x,71h	ACB00CR0	RTapMux[3:0]				Gain	RTopMux	RBotMux[1:0]		RW : 00
x,75h	ACB01CR0	RTapMux[3:0]				Gain	RTopMux	RBotMux[1:0]		RW : 00

LEGEND
x An “x” before the comma in the address field indicates that the register exists in both register banks.

The Analog Continuous Time Type B Block Control Register 0 (ACBxxCR0) is one of four registers used to configure a type B continuous time PSoC block.

Bits 7 to 4: RTapMux[3:0]. These bits, in combination with the EXGAIN bit 0 in the ACBxxCR3 register, select the tap of the resistor string.

Bit 3: Gain. This bit controls whether the resistor string is connected around the opamp as for gain (tap to inverting opamp input) or for loss (tap to output of the block). Note that setting Gain alone does not guarantee a gain or loss block. Routing of the ends of the resistor string determine this.

Bit 2: RTopMux. This bit controls the top end of the resistor string, which can either be connected to Vdd or to the opamp output.

Bits 1 and 0: RBotMux[1:0]. These bits, in combination with the INSAMP bit 1 in the ACBxxCR3 register, control the connection of the bottom end of the resistor string.

For additional information, refer to the ACBxxCR0 register on page 400.

19.2.3 ACBxxCR1 Register

Add.	Name	Bit 7	Bit 6	Bit 5	Bit 4	Bit 3	Bit 2	Bit 1	Bit 0	Access
x,72h	ACB00CR1	AnalogBus	CompBus	NMux[2:0]			PMux[2:0]			RW : 00
x,76h	ACB01CR1	AnalogBus	CompBus	NMux[2:0]			PMux[2:0]			RW : 00

LEGEND
x An “x” before the comma in the address field indicates that the register exists in both register banks.

The Analog Continuous Time Type B Block Control Register 1 (ACBxxCR1) is one of four registers used to configure a type B continuous time PSoC block.

Bit 7: AnalogBus. This bit controls the analog output bus (ABUS). A CMOS switch connects the opamp output to the analog bus.

Bit 6: CompBus. This bit controls a tri-state buffer that drives the comparator logic. If no block in the analog column is driving the comparator bus, it will be driven low externally to the blocks.

Bits 5 to 3: NMux[2:0]. These bits control the multiplexing of inputs to the inverting input of the opamp. There are seven input choices from outside the block, plus the internal feedback selection from the resistor string top.

Bits 2 to 0: PMux[2:0]. These bits control the multiplexing of inputs to the non-inverting input of the opamp. There are seven input choices from outside the block, plus the internal feedback selection from the resistor string top.

For additional information, refer to the ACBxxCR1 register on page 402.

PRELIMINARY

19.2.4 ACBxxCR2 Register

Add.	Name	Bit 7	Bit 6	Bit 5	Bit 4	Bit 3	Bit 2	Bit 1	Bit 0	Access
x,73h	ACB00CR2	CPhase	CLatch	CompCap	TMUXEN	TestMux[1:0]		PWR[1:0]		RW : 00
x,77h	ACB01CR2	CPhase	CLatch	CompCap	TMUXEN	TestMux[1:0]		PWR[1:0]		RW : 00

LEGEND
x An “x” before the comma in the address field indicates that the register exists in both register banks.

The Analog Continuous Time Type B Block Control Register 2 (ACBxxCR2) is one of four registers used to configure a type B continuous time PSoC block.

Bit 7: CPhase. This bit controls which internal clock phase the comparator data is latched on.

Bit 6: CLatch. This bit controls whether the latch is active or if it is always transparent.

Bit 5: CompCap. This bit controls whether or not the compensation capacitor is enabled in the opamp. By not switching in the compensation capacitance, a much faster response is obtained if the amplifier is used as a comparator.

Bit 4: TMUXEN. If the TMUXEN bit is high, then the value of TestMux[1:0] determines which test mux input is connected to the ABUS for that particular continuous time block. If the TMUXEN bit is low, then none of the test mux inputs are connected to the ABUS regardless of the value of TestMux[1:0].

Bits 3 and 2: TextMux[1:0]. These bits select which signal is connected to the analog bus.

Bits 1 and 0: PWR[1:0]. Power is encoded to select one of three power levels or power down (off). The blocks power up in the off state. Combined with the Turbo mode, this provides six power levels. Turbo mode is controlled by the HBE bit of the Analog Reference Control register (ARF_CR).

For additional information, refer to the ACBxxCR2 register on page 404.

OBSOLETE

20. Switched Capacitor PSoC Block

This chapter presents the Analog Switched Capacitor Block and its associated registers. The analog Switched Capacitor (SC) blocks are built around a low offset, low noise operational amplifier. For a complete table of the Switched Capacitor PSoC Block registers, refer to the “Summary Table of the Analog Registers” on page 163. For a quick reference of all PowerPSoC registers in address order, refer to the Register Details chapter on page 361.

20.1 Architectural Description

The Analog Switched Capacitor blocks are built around a rail-to-rail, input and output, low offset and low noise opamp. (Refer to Figure 20-1 and Figure 20-2.) There are several analog multiplexers (muxes) controlled by register bit settings in the control registers that determine the signal topology inside the block. There are four user-selectable capacitor arrays inside this block connected to the opamp.

There are four analog arrays. Three of the four arrays are input arrays and are labeled A Cap Array, B Cap Array, and C Cap Array. The fourth array is the feedback path array and is labeled F Cap Array. All arrays have user-selectable unit values: one array is in the feedback path of the opamp and three arrays are in the input path of the opamp. Analog muxes, controlled by bit settings in control registers, set the capacitor topology inside the block. A group of muxes are used for the signal processing and switch synchronously to clocks PHI1 and PHI2, with behavior that is modified by control register settings. There is also an analog comparator that converts the opamp output (relative to the local analog ground) into a digital signal.

There are two types of Analog Switched Capacitor blocks called Type C and Type D. Their primary differences relate to connections of the C Cap Array and the block’s position in a two-pole filter section. The Type D block also has greater flexibility in switching the B Cap Array.

There are three discrete outputs from this block. These outputs connect to the following buses:

1. The analog output bus (ABUS), which is an analog bus resource shared by all of the analog blocks in the analog column. This signal may also be routed externally through the output buffer. The ABUS of each column has a 1.4 pF capacitor to GND. This capacitor may be used to hold a sampled value on the ABUS net. Although there is only one capacitor per column, it is shown in both Figure 20-1 and Figure 20-2 to allow visualization of the sample and hold function. See the description of the ClockPhase bit in the ASCxxCR0 and ASDxxCR0 registers in section 20.3 Register Definitions.
2. The comparator bus (CBUS), which is a digital bus resource shared by all of the analog blocks in the analog column.
3. The local output bus (OUT), which is an analog node, is routed to neighboring block inputs.

PROFILE

Figure 20-1. Analog Switched Capacitor Type C PSoC Blocks

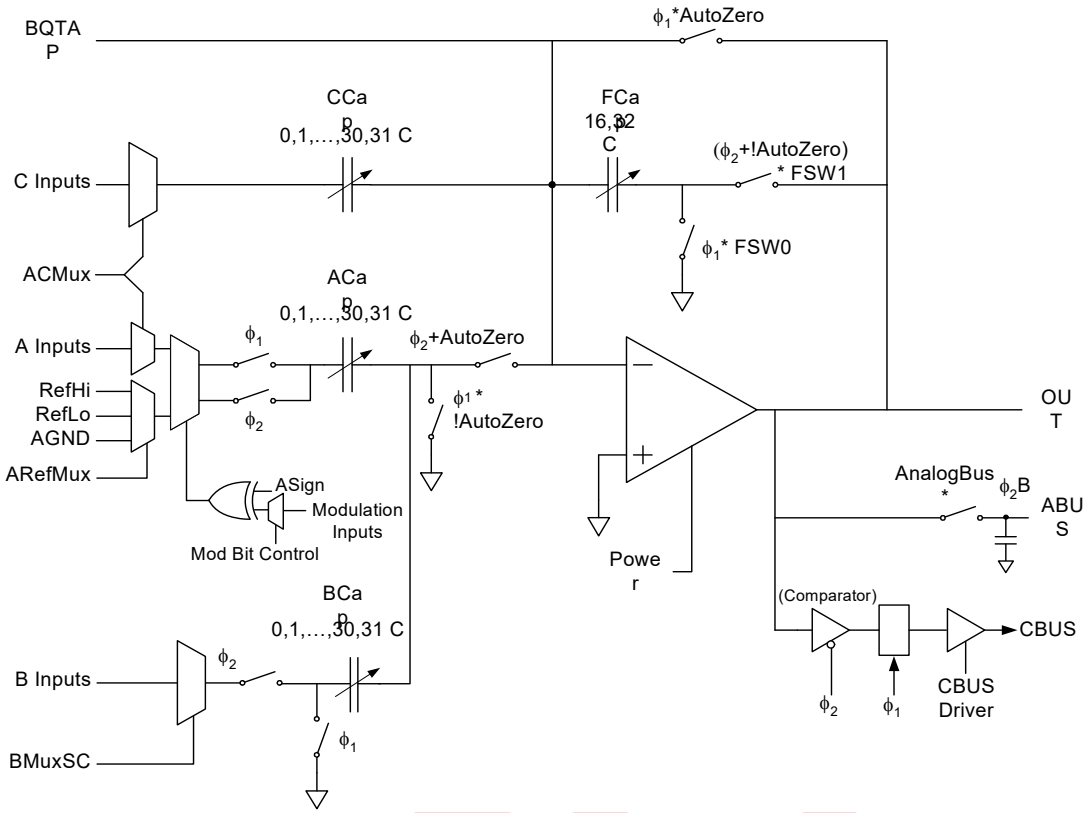

Figure 20-2. Analog Switched Capacitor Type D PSoC Blocks

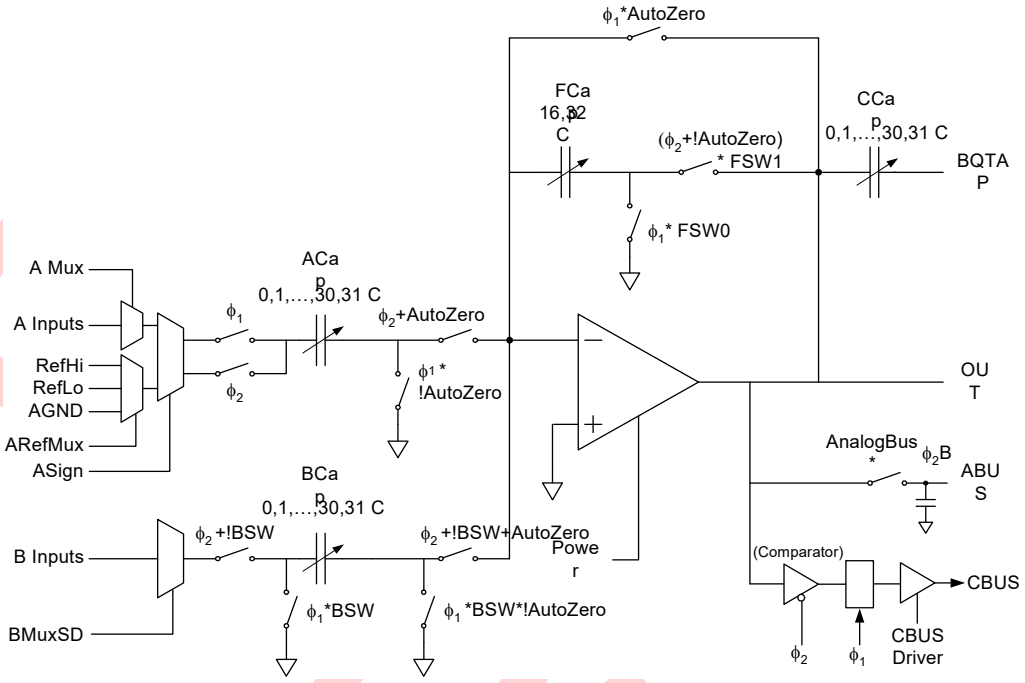

20.2 Application Description

The analog Switched Capacitor (SC) blocks support Delta-Sigma, Successive Approximation, and Incremental Analog-to-Digital Conversion, Capacitor DACs, and SC filters. They have three input arrays of binary-weighted switched capacitors, allowing user programmability of the capacitor weights. This provides summing capability of two (CDAC) scaled inputs and a non-switched capacitor input.

The non-switched capacitor node is labeled “BQTAP” in the figure above. For two and four column PowerPSoC devices, the local connection of BQTAP is between horizontal neighboring SC blocks within an analog bi-column. For one column PowerPSoC devices, the local connection of BQTAP is vertical between the SC blocks. Since the input of SC Block C (ASCxx) has this additional switched capacitor, it is configured for the input stage of such a switched capacitor bi-quad ***filter***. When followed by an SC Block D (ASDxx) integrator, this combination of blocks can be used to provide a full universal two-pole switched capacitor bi-quad filter.

OBSOLETE

20.3 Register Definitions

The following registers are associated with the Switched Capacitor (SC) PSoC Block and are listed in address order. Each register description has an associated register table showing the bit structure for that register. For a complete table of SC PSoC Block registers, refer to the "Summary Table of the Analog Registers" on page 163.

Depending on how many analog columns your PowerPSoC device has (see the Cols. column in the register tables below), only certain bits are accessible to be read or written. The bits that are grayed out throughout this manual are reserved bits and are not detailed in the register descriptions that follow. Reserved bits should always be written with a value of '0'.

Figure 20-3 applies to the ACap, BCap, and CCap functionality for the capacitor registers. The *X*Cap field is used to store the binary encoded value for capacitor *X*, where *X* can be A (ACap), B (BCap), or C (CCap), in both the ASCxxCRx and ASDxxCRx registers. Figure 20-3 illustrates the switch settings for the example ACap[4:0]=14h=10100b=20d.

Figure 20-3. Example Switched Capacitor Settings

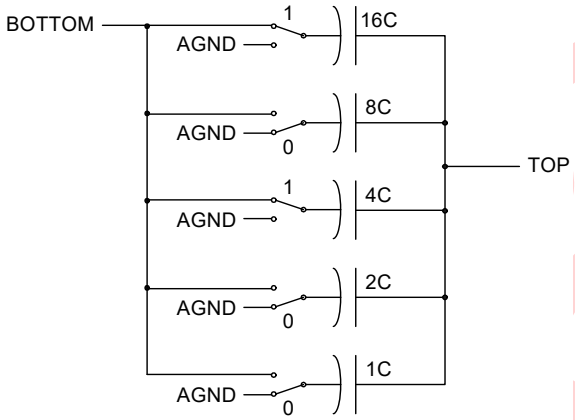

OBSOLETE

Analog Switch Cap Type C PSoC Block Control Registers

In the tables below, an “x” before the comma in the address field (in the “Add.” column) indicates that the register exists in both register banks. The register naming convention for arrays of PSoC blocks and their registers is <Prefix>mn<Suffix>, where m=row index and n=column index. Therefore, ASC21CR2 is a register for an analog PSoC block in row 2 column 1.

20.3.1 ASCxxCR0 Register

Add.	Name	Bit 7	Bit 6	Bit 5	Bit 4	Bit 3	Bit 2	Bit 1	Bit 0	Access
x,80h	ASC10CR0	FCap	ClockPhase	ASign	ACap[4:0]					RW : 00
x,94h	ASC21CR0	FCap	ClockPhase	ASign	ACap[4:0]					RW : 00

LEGEND
x An “x” before the comma in the address field indicates that the register exists in both register banks.

The Analog Switch Cap Type C Block Control Register 0 (ASCxxCR0) is one of four registers used to configure a type C switch capacitor PSoC block.

Bit 7: FCap. This bit controls the size of the switched feedback capacitor in the integrator.

Bit 6: ClockPhase. This bit controls the internal clock phasing relative to the input clock phasing. ClockPhase affects the output of the analog column bus, which is controlled by the AnalogBus bit in the Control 2 register.

This bit is the ClockPhase select that inverts the clock internal to the blocks. During normal operation of an SC block, for the amplifier of a column enabled to drive the output bus, the connection is only made for the last half of PHI2. (During PHI1 and for the first half of PHI2, the output bus floats at the last voltage to which it was driven.) This forms a sample and hold operation, using the output bus and its associated capacitance. This design prevents the output bus from being perturbed by the intermediate states of the SC operation (often a reset state for PHI1 and settling to the valid state during PHI2). The following are the exceptions:

1. If the ClockPhase bit in CR0 (for the SC block in question) is set to ‘1’, then the output is enabled for the whole of PHI2.
2. If the SHDIS signal is set in bit 6 of the Analog Clock Source Control register, then sample and hold operation is disabled for all columns and all enabled outputs of SC blocks are connected to their respective output buses for the entire period of their respective PHI2s.

This bit also affects the latching of the comparator output (CBUS). Both clock phases, PHI1 and PHI2, are involved in the output latching mechanism. The capture of the next value to be output from the latch (capture point event) happens during the falling edge of one clock phase. The rising edge of the other clock phase will cause the value to come out (output point event). This bit determines which clock phase triggers the capture point event, and the other clock will trigger the output point event. The value output to the comparator bus will remain stable between output point events.

Bit 5: ASign. This bit controls the switch phasing of the switches on the bottom plate of the ACap capacitor. The bottom plate samples the input or the reference.

Bits 4 to 0: ACap[4:0]. The ACap bits set the value of the capacitor in the A path.

For additional information, refer to the ASCxxCR0 register on page 409.

OBSOLETE

20.3.2 ASCxxCR1 Register

Add.	Name	Bit 7	Bit 6	Bit 5	Bit 4	Bit 3	Bit 2	Bit 1	Bit 0	Access
x,81h	ASC10CR1	ACMux[2:0]			BCap[4:0]					RW : 00
x,95h	ASC21CR1	ACMux[2:0]			BCap[4:0]					RW : 00

LEGEND
x An "x" before the comma in the address field indicates that the register exists in both register banks.

The Analog Switch Cap Type C Block Control Register 1 (ASCxxCR1) is one of four registers used to configure a type C switch capacitor PSoC block.

Bits 7 to 5: ACMUX[2:0]. These bits control the input muxing for both the A and C capacitor branches. The high order bit, ACMux[2], selects one of two inputs for the C branch.

Bits 4 to 0: BCap[4:0]. The BCap bits set the value of the capacitor in the B path.

For additional information, refer to the ASCxxCR1 register on page 410.

20.3.3 ASCxxCR2 Register

Add.	Name	Bit 7	Bit 6	Bit 5	Bit 4	Bit 3	Bit 2	Bit 1	Bit 0	Access
x,82h	ASC10CR2	AnalogBus	CompBus	AutoZero	CCap[4:0]					RW : 00
x,96h	ASC21CR2	AnalogBus	CompBus	AutoZero	CCap[4:0]					RW : 00

LEGEND
x An "x" before the comma in the address field indicates that the register exists in both register banks.

The Analog Switch Cap Type C Block Control Register 2 (ASCxxCR2) is one of four registers used to configure a type C switch capacitor PSoC block.

Bit 7: AnalogBus. This bit gates the output to the analog column bus (ABUS). The output on the ABUS is affected by the state of the ClockPhase bit in the Control 0 register. If AnalogBus is set to '0', the output to the analog column bus is tristated. If AnalogBus is set to '1', the signal that is output to the analog column bus is selected by the ClockPhase bit. If the ClockPhase bit is '0', the block output is gated by sampling clock on the last part of PHI2. If the ClockPhase bit is '1', the block output continuously drives the ABUS.

Bit 6: CompBus. This bit controls the output to the column comparator bus (CBUS). Note that if the CBUS is not driven by anything in the column, it is pulled low. The comparator output is evaluated on the rising edge of internal PHI1 and is latched so it is available during internal PHI2.

Bit 5: AutoZero. This bit controls the shorting of the output to the inverting input of the opamp. When shorted, the opamp is basically a follower. The output is the opamp offset. By using the feedback capacitor of the integrator, the block can memorize the offset and create an offset cancellation scheme. AutoZero also controls a pair of switches between the A and B branches and the summing node of the opamp. If AutoZero is enabled, then the pair of switches is active. AutoZero also affects the function of the FSW1 bit in the Control 3 register.

Bits 4 to 0: CCap[4:0]. The CCap bits set the value of the capacitor in the C path.

For additional information, refer to the ASCxxCR2 register on page 411.

OBSOLETE

20.3.4 ASCxxCR3 Register

Add.	Name	Bit 7	Bit 6	Bit 5	Bit 4	Bit 3	Bit 2	Bit 1	Bit 0	Access
x,83h	ASC21CR2	ARefMux[1:0]		FSW1	FSW0	BMuxSC[1:0]		PWR[1:0]		RW : 00
x,97h	ASC21CR3	ARefMux[1:0]		FSW1	FSW0	BMuxSC[1:0]		PWR[1:0]		RW : 00

LEGEND
x An “x” before the comma in the address field indicates that the register exists in both register banks.

The Analog Switch Cap Type C Block Control Register 3 (ASCxxCR3) is one of four registers used to configure a type C switch capacitor PSoC block.

Bits 7 and 6: ARefMux[1:0]. These bits select the reference input of the A capacitor branch.

Bit 5: FSW1. This bit is used to control a switch in the integrator capacitor path. It connects the output of the opamp to the integrating cap. The state of the feedback switch is affected by the state of the AutoZero bit in the Control 2 register. If the FSW1 bit is set to ‘0’, the switch is always disabled. If the FSW1 bit is set to ‘1’, the AutoZero bit determines the state of the switch. If the AutoZero bit is ‘0’, the switch is enabled at all times. If the AutoZero bit is ‘1’, the switch is enabled only when the internal PHI2 is high.

Bit 4: FSW0. This bit is used to control a switch in the integrator capacitor path. It connects the output of the opamp to analog ground.

Bits 3 and 2: BMuxSC[1:0]. These bits control the muxing to the input of the B capacitor branch.

Bits 1 and 0: PWR[1:0]: The power bits serve as encoding for selecting one of four power levels. The block always powers up in the off state.

For additional information, refer to the ASCxxCR3 register on page 412.

OBSOLETE

Analog Switch Cap Type D PSoC Block Control Registers

In the tables below, an “x” before the comma in the address field (in the “Add.” column) indicates that the register exists in both register banks. The register naming convention for arrays of PSoC blocks and their registers is <Prefix>mn<Suffix>, where m=row index and n=column index. Therefore, ASD01CR0 is a register for an analog PSoC block in row 0 column 1.

20.3.5 ASDxxCR0 Register

Add.	Name	Bit 7	Bit 6	Bit 5	Bit 4	Bit 3	Bit 2	Bit 1	Bit 0	Access
x,84h	ASD11CR0	FCap	ClockPhase	ASign	ACap[4:0]					RW : 00
x,90h	ASD20CR0	FCap	ClockPhase	ASign	ACap[4:0]					RW : 00

LEGEND
x An “x” before the comma in the address field indicates that the register exists in both register banks.

The Analog Switch Cap Type D Block Control Register 0 (ASDxxCR0) is one of four registers used to configure a type D switch capacitor PSoC block.

Bit 7: FCap. This bit controls the size of the switched feedback capacitor in the integrator.

Bit 6: ClockPhase. This bit controls the internal clock phasing relative to the input clock phasing. ClockPhase affects the output of the analog column bus which is controlled by the AnalogBus bit in the Control 2 register.

This bit is the ClockPhase select that inverts the clock internal to the blocks. During normal operation, of an SC block for the amplifier of a column enabled to drive the output bus, the connection is only made for the last half of PHI2. (During PHI1 and for the first half of PHI2, the output bus floats at the last voltage to which it was driven.) This forms a sample and hold operation using the output bus and its associated capacitance. This design prevents the output bus from being perturbed by the intermediate states of the SC operation (often a reset state for PHI1 and settling to the valid state during PHI2). The following are the exceptions:

1. If the ClockPhase bit in CR0 (for the SC block in question) is set to ‘1’, then the output is enabled for the whole of PHI2.
2. If the SHDIS signal is set in bit 6 of the Analog Clock Select register, then sample and hold operation is disabled for all columns and all enabled outputs of SC blocks are connected to their respective output buses, for the entire period of their respective PHI2s.

This bit also affects the latching of the comparator output (CBUS). Both clock phases, PHI1 and PHI2, are involved in the output latching mechanism. The capture of the next value to be output from the latch (capture point event) happens during the falling edge of one clock phase. The rising edge of the other clock phase will cause the value to come out (output point event). This bit determines which clock phase triggers the capture point event, and the other clock will trigger the output point event. The value output to the comparator bus will remain stable between output point events.

Bit 5: ASign. This bit controls the switch phasing of the switches on the bottom plate of the A capacitor. The bottom plate samples the input or the reference.

Bits 4 to 0: ACap[4:0]. The ACap bits set the value of the capacitor in the A path.

For additional information, refer to the ASDxxCR0 register on page 413.

OBSOLETE

20.3.6 ASDxxCR1 Register

Add.	Name	Bit 7	Bit 6	Bit 5	Bit 4	Bit 3	Bit 2	Bit 1	Bit 0	Access
x,85h	ASD11CR1	AMux[2:0]			BCap[4:0]					RW : 00
x,91h	ASD20CR1	AMux[2:0]			BCap[4:0]					RW : 00

LEGEND
x An “x” before the comma in the address field indicates that the register exists in both register banks.

The Analog Switch Cap Type D Block Control Register 1 (ASDxxCR1) is one of four registers used to configure a type D switch capacitor PSoC block.

Bits 7 to 5: AMux[2:0]. These bits control the input muxing for the A capacitor branch.

Bits 4 to 0: BCap[4:0]. The BCap bits set the value of the capacitor in the B path.

For additional information, refer to the ASDxxCR1 register on page 414.

20.3.7 ASDxxCR2 Register

Add.	Name	Bit 7	Bit 6	Bit 5	Bit 4	Bit 3	Bit 2	Bit 1	Bit 0	Access
x,92h	ASD20CR2	AnalogBus	CompBus	AutoZero	CCap[4:0]					RW : 00

LEGEND
x An “x” before the comma in the address field indicates that the register exists in both register banks.

The Analog Switch Cap Type D Block Control Register 2 (ASDxxCR2) is one of four registers used to configure a type D switch capacitor PSoC block.

Bit 7: AnalogBus. This bit gates the output to the analog column bus (ABUS). The output on the ABUS is affected by the state of the ClockPhase bit in the Control 0 Register. If AnalogBus is set to ‘0’, the output to the ABUS is tristated. If AnalogBus is set to ‘1’, the ClockPhase bit selects the signal that is output to the analog-column bus. If the ClockPhase bit is ‘0’, the block output is gated by sampling clock on the last part of PHI2. If the ClockPhase bit is ‘1’, the block ClockPhase continuously drives the ABUS.

Bit 6: CompBus. This bit controls the output to the column comparator bus (CBUS). Note that if the CBUS is not driven by anything in the column, it is pulled low. The comparator output is evaluated on the rising edge of internal PHI1 and is latched so it is available during internal PHI2.

Bit 5: AutoZero. This bit controls the shorting of the output to the inverting input of the opamp. When shorted, the opamp is basically a follower. The output is the opamp offset. By using the feedback capacitor of the integrator, the block can memorize the offset and create an offset cancellation scheme. AutoZero also controls a pair of switches between the A and B branches and the summing node of the opamp. If AutoZero is enabled, then the pair of switches is active. AutoZero also affects the function of the FSW1 bit in the Control 3 register.

Bits 4 to 0: CCap[4:0]. The CCap bits set the value of the capacitor in the C path.

For additional information, refer to the ASDxxCR2 register on page 415.

OBSOLETE

20.3.8 ASDxxCR3 Register

Add.	Name	Bit 7	Bit 6	Bit 5	Bit 4	Bit 3	Bit 2	Bit 1	Bit 0	Access
x,93h	ASD20CR3	ARefMux[1:0]		FSW1	FSW0	BSW	BMuxSD	PWR[1:0]		RW : 00

LEGEND
x An “x” before the comma in the address field indicates that the register exists in both register banks.

The Analog Switch Cap Type D Block Control Register 3 (ASDxxCR3) is one of four registers used to configure a type D switch capacitor PSoC block.

Bits 7 and 6: ARefMux[1:0]. These bits select the reference input of the A capacitor branch.

Bit 5: FSW1. This bit is used to control a switch in the integrator capacitor path. It connects the output of the opamp to the integrating cap. The state of the switch is affected by the state of the AutoZero bit in the Control 2 register. If the FSW1 bit is set to ‘0’, the switch is always disabled. If the FSW1 bit is set to ‘1’, the AutoZero bit determines the state of the switch. If the AutoZero bit is ‘0’, the switch is enabled at all times. If the AutoZero bit is ‘1’, the switch is enabled only when the internal PHI2 is high.

Bit 4: FSW0. This bit is used to control a switch in the integrator capacitor path. It connects the output of the opamp to analog ground.

Bit 3: BSW. This bit is used to control switching in the B branch. If disabled, the B capacitor branch is a continuous time branch like the C branch of the SC A Block. If enabled, then on internal PHI1, both ends of the cap are switched to analog ground. On internal PHI2, one end is switched to the B input and the other end is switched to the summing node.

Bit 2: BMuxSD. This bit controls muxing to the input of the B capacitor branch. The B branch can be switched or unswitched.

Bits 1 and 0: PWR[1:0]. The power bits serve as encoding for selecting one of four power levels. The block always powers up in the off state.

For additional information, refer to the ASDxxCR3 register on page 416.

OBSOLETE

Section E: System Resources

The System Resources section discusses the system resources that are available for the CY8CLED0xx0x PowerPSoC devices and the registers associated with those resources. This section encompasses the following chapters:

- Digital Clocks on page 213
- Multiply Accumulate (MAC) on page 225
- Decimator on page 231
- I2C on page 237
- Internal Voltage Reference on page 255
- System Resets on page 257
- POR and LVD on page 263
- I/O Analog Multiplexer on page 265

Top Level System Resources Architecture

The figure below displays the top level architecture of the PowerPSoC device's system resources. Each component of the figure is discussed at length in this section.

PowerPSoC System Resources

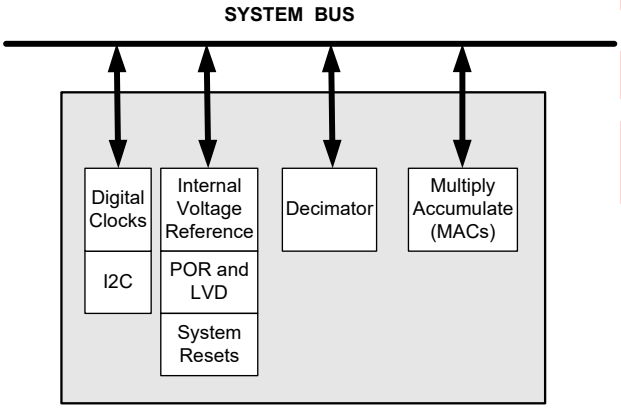

Interpreting the System Resources Documentation

Information in this section covers the CY8CLED0xx0x PowerPSoC devices. The following table lists the resources available for the CY8CLED0xx0x with a check mark or appropriate information. Blank fields denote that the system resource is not available.

System Resources for PowerPSoC Devices

PSoC Part Number	Digital Clocks	I2C	Internal Voltage Ref	POR and LVD	System Resets	Decimator[a]	Multiply Accumulate
CY8CLED0xx0x	✓	✓	✓	✓	✓	T2	2

a.Decimator types: T1 = Type 1, T2 = Type 2.

OBSOLETE

System Resources Register Summary

The table below lists all the PowerPSoC registers for the system resources, in address order, within their system resource configuration. The bits that are grayed out are reserved bits. If these bits are written, they should always be written with a value of '0'.

Note that the CY8CLED0xx0x PowerPSoC devices have 2 analog columns and 2 digital rows.

Summary Table of the System Resource Registers

Address	Name	Bit 7	Bit 6	Bit 5	Bit 4	Bit 3	Bit 2	Bit 1	Bit 0	Access
DIGITAL CLOCK REGISTERS (page 217)										
0,DAh	INT_CLR0	VC3	Sleep	GPIO	UVLO		Analog 1	Analog 0	V Monitor	RW : 00
0,E0h.	INT_MSK0	VC3	Sleep	GPIO	UVLO		Analog 1	Analog 0	V Monitor	RW : 00
1,DDh	OSC_GO_EN	SLPINT	VC3	VC2	VC1	SYSCLKX2	SYSCLK	CLK24M	CLK32K	RW : 00
1,DEh	OSC_CR4							VC3 Input Select[1:0]		RW : 0
1,DFh	OSC_CR3	VC3 Divider[7:0]								RW : 00
1,E0h	OSC_CR0			No Buzz	Sleep[1:0]		CPU Speed[2:0]			RW : 00
1,E1h	OSC_CR1	VC1 Divider[3:0]				VC2 Divider[3:0]				RW : 00
1,E2h	OSC_CR2						EXTCLKEN	RSVD	SYSCLKX-2DIS	RW : 0
MULTIPLY ACCUMULATE (MAC) REGISTERS (page 226)										
0,A8h	MULx_X	Data[7:0]								W : XX
0,A9h	MULx_Y	Data[7:0]								W : XX
0,AAh	MULx_DH	Data[7:0]								R : XX
0,ABh	MULx_DL	Data[7:0]								R : XX
0,ACh	MACx_X/ACCx-_DR1	Data[7:0]								RW : 00
0,ADh	MACx_Y/ACCx-_DR0	Data[7:0]								RW : 00
0,AEh	MACx_CL0/ACCx-_DR3	Data[7:0]								RW : 00
0,AFh	MACx_CL1/ACCx-_DR2	Data[7:0]								RW : 00
0,E8h	MULx_X	Data[7:0]								W : XX
0,E9h	MULx_Y	Data[7:0]								W : XX
0,EAh	MULx_DH	Data[7:0]								R : XX
0,EBh	MULx_DL	Data[7:0]								R : XX
0,ECh	MACx_X/ACCx-_DR1	Data[7:0]								RW : 00
0,EDh	MACx_Y/ACCx-_DR0	Data[7:0]								RW : 00
0,EEh	MACx_CL0/ACCx-_DR3	Data[7:0]								RW : 00
0,EFh	MACx_CL1/ACCx-_DR2	Data[7:0]								RW : 00
DECIMATOR REGISTERS (page 233)										
0,E4h	DEC_DH	Data High Byte[7:0]								RC : XX
0,E5h	DEC_DL	Data Low Byte[7:0]								RC : XX
0,E6h	DEC_CR0			IGEN[1:0]		ICLKS0	DCOL[1:0]		DCLKS0	RW : 00
0,E7h	DEC_CR1		IDEC	ICLKS3	ICLKS2	ICLKS1	DCLKS3	DCLKS2	DCLKS1	RW : 00
1,E7h	DEC_CR2 *	Mode[1:0]		Data Out Shift[1:0]		Data Format	Decimation Rate[2:0]			RW : 00

OBSOLETE

Summary Table of the System Resource Registers *(continued)*

Address	Name	Bit 7	Bit 6	Bit 5	Bit 4	Bit 3	Bit 2	Bit 1	Bit 0	Access
I2C REGISTERS (page 240)										
0,D6h	I2C_CFG		PSelect	Bus Error IE	Stop IE	Clock Rate[1:0]		Enable Mas-ter	Enable Slave	RW : 00
0,D7h	I2C_SCR	Bus Error	Lost Arb	Stop Status	ACK	Address	Transmit	LRB	Byte Complete	R : 00
0,D8h	I2C_DR	Data[7:0]								RW : 00
0,D9h	I2C_MSCR					Bus Busy	Master Mode	Restart Gen	Start Gen	R : 00
INTERNAL VOLTAGE REFERENCE REGISTER (page 255)										
1,EAh	BDG_TR			TC[1:0]		V[3:0]				RW : 00
SYSTEM RESET REGISTERS (page 258)										
x,FEh	CPU_SCR1	IRESS							IRAMDIS	# : 0
x,FFh	CPU_SCR0	GIES		WDRS	PORS	Sleep			STOP	# : XX
POR AND LVD REGISTERS (page 264)										
1,E3h	VLT_CR			PORLEV[1:0]		LVDTBEN	VM[2:0]			RW : 00
1,E4h	VLT_CMP							LVD	PPOR	R : 0

LEGEND
X The value after power on reset is unknown.
C Clearable register or bits.
R Read register or bit(s).
W Write register or bit(s).
Access is bit specific. Refer to the Register Details chapter on page 361 for additional information.

OBSOLETE

OBSOLETE

21. Digital Clocks

This chapter discusses the Digital Clocks and their associated registers. It serves as an overview of the clocking options available in the PowerPSoC devices. For detailed information on specific oscillators, see the individual oscillator chapters in the section called "PSoC Core" on page 39. For a complete table of the digital clock registers, refer to the "Summary Table of the System Resource Registers" on page 210. For a quick reference of all PowerPSoC registers in address order, refer to the Register Details chapter on page 361.

21.1 Architectural Description

The PowerPSoC M8C core has a large number of clock sources that increase the flexibility of the PSoC Programmable System-on-Chip, as listed in Table 21-1 and illustrated in Figure 21-1.

Table 21-1. System Clocking Signals and Definitions

Signal	Definition
SYSCLKX2	Twice the frequency of SYSCLK.
SYSCLK	Either the direct output of the Internal Main Oscillator or the direct input of the EXTCLK pin while in external clocking mode.
CPUCLK	SYSCLK is divided down to one of eight possible frequencies, to create CPUCLK which determines the speed of the M8C. See OSC_CR0 in the Register Definitions section of this chapter.
VC1	SYSCLK is divided down to create Variable Clock 1 (VC1). See OSC_CR1 in the Register Definitions section of this chapter. Division range is from 1 to 16.
VC2	VC1 is divided down to create Variable Clock 2 (VC2). See OSC_CR1 in the Register Definitions section of this chapter. Division range is from 1 to 16.
VC3	Divides down either SYSCLK, VC1, VC2, or SYSCLKX2 to create Variable Clock 3 (VC3). Division range is from 1 to 256. See OSC_CR3 and OSC_CR4 in the Register Definitions section of this chapter.
CLK32K	The Internal Low Speed Oscillator output. See OSC_CR0 in the Register Definitions section of this chapter.
CLK24M	The internally generated 24 MHz clock by the IMO. By default, this clock drives SYSCLK; however, an external clock may be used by enabling EXTCLK mode.
SLEEP	One of four sleep intervals may be selected from 1.95 ms to 1 second. See OSC_CR0 in the Register Definitions section of this chapter.

21.1.1 Internal Main Oscillator

The Internal Main Oscillator (IMO) is the foundation upon which almost all other clock sources in the PSoC Programmable System-on-Chip are based. The default mode of the IMO creates a 24 MHz reference clock that is used by many other circuits in the PowerPSoC device. The PowerPSoC device has an option to replace the IMO with an externally supplied clock that will become the base for all of the clocks the IMO normally serves. The internal base clock net is called SYSCLK and may be driven by either the IMO or an external clock (EXTCLK).

Whether the external clock or the internal main oscillator is selected, all PowerPSoC device functions are clocked from a derivative of SYSCLK or are resynchronized to SYSCLK. All external asynchronous signals (through row inputs) are resynchronized to SYSCLK for use in the digital PSoC blocks.

The IMO is discussed in detail in the chapter "Internal Main Oscillator (IMO)" on page 89.

21.1.2 Internal Low Speed Oscillator

The Internal Low Speed Oscillator (ILO) is always on. The ILO is available as a general clock, but is also the clock source for the sleep and watchdog timers.

The ILO is discussed in detail in the chapter "Internal Low Speed Oscillator (ILO)" on page 91.

CYPRESS PERFORM
CONFIDENTIAL

Figure 21-1. Overview of PSoC Clock Sources

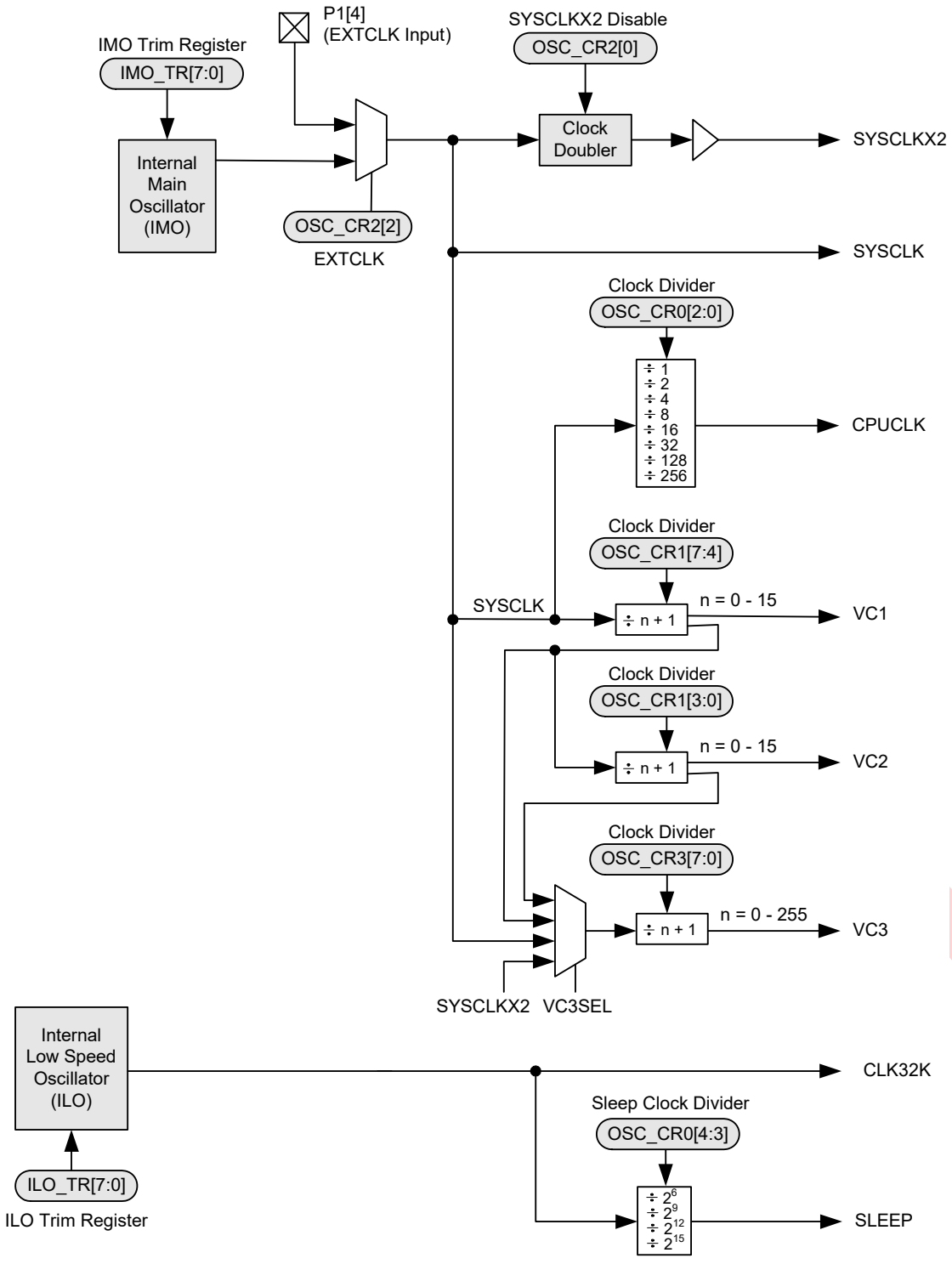

21.1.3 External Clock

The ability to replace the 24 MHz internal main oscillator (IMO), as the device master system clock (SYSCLK) with an externally supplied clock, is a feature in the PSoC Programmable System-on-Chip (see Figure 21-1).

Pin P1[4] is the input pin for the external clock. This pin was chosen because it is not associated with any special features such as analog I/O or In System Serial Programming (ISSP). It is also not physically close to either the P1[0] and P1[1] pins. If P1[4] is selected as the external clock source, the drive mode of the pin must be set to High-Z (not High-Z analog).

The user is able to supply an external clock with a frequency between 1 MHz and 24 MHz. The reset state of the EXTCLKEN bit is '0'; and therefore, the device always boots up under the control of the IMO. There is no way to start the system from a reset state with the external clock.

When the EXTCLKEN bit is set, the external clock becomes the source for the internal clock tree, SYSCLK, which drives most PowerPSoC device clocking functions. All external and internal signals, including the 32 kHz clock, derived from the internal low speed oscillator (ILO) are synchronized to this clock source.

Note that there is no glitch protection in the device for an external clock. User should ensure that the external clock is glitch free. See device data sheet for the clock specifications.

21.1.3.1 Clock Doubler

One of the blocks driven by the system clock is the clock doubler circuit that drives the SYSCLKX2 output. This doubled clock, which is 48 MHz when the IMO is the selected clock (at 24 MHz), may be used as a clock source for the digital PSoC blocks. When the external clock is selected, the SYSCLKX2 signal is still available and serves as a doubler for whatever frequency is input on the external clock pin.

Following the specification for the external clock input ensures that the internal circuitry of the digital PSoC blocks, which is clocked by SYSCLKX2, will meet timing requirements. However, since the doubled clock is generated from both edges of the input clock, clock jitter is introduced if the duty cycle deviates greatly from 50 percent. Also, the high time of the clock out of the doubler is fixed at 21 ns, so the duty cycle of SYSCLKX2 is proportional to the inverse of the frequency, as shown in Figure 21-2. Regardless of the input frequency, the high period of SYSCLKX2 is 21 ns nominal.

Figure 21-2. Operation of the Clock Doubler

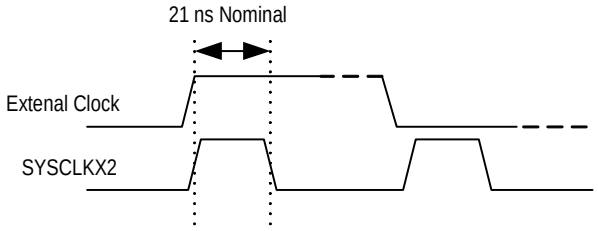

21.1.3.2 Switch Operation

Switching between the IMO and the external clock may be done in firmware at any time and is transparent to the user. Since all PowerPSoC device resources run on clocks derived from or synchronized to SYSCLK, when the switch is made, analog and digital functions may be momentarily interrupted.

Switch timing depends on whether the CPU clock divider is set for divide by 1, or divide by 2 or greater. In the case where the CPU clock divider is set for divide by 2 or greater, as shown in Figure 21-3, the setting of the EXTCLKEN bit occurs shortly after the rising edge of SYSCLK. The SYSCLK output is then disabled after the next falling edge of SYSCLK, but before the next rising edge. This ensures a glitch-free transition and provides a full cycle of setup time from SYSCLK to output disable. Once the current clock selection is disabled, the enable of the newly selected clock is double synchronized to that clock. After synchronization, on the subsequent negative edge, SYSCLK is enabled to output the newly selected clock.

In the 24 MHz case, as shown in Figure 21-4, the assertion of IOW_ and thus the setting of the EXTCLKEN bit occurs on the falling edge of SYSCLK. Since SYSCLK is already low, the output is immediately disabled. Therefore, the setup time from SYSCLK to disable is one-half SYSCLK.

CYPRESS CONFIDENTIAL

Figure 21-3. Switch from IMO to the External Clock with a CPU Clock Divider of Two or Greater

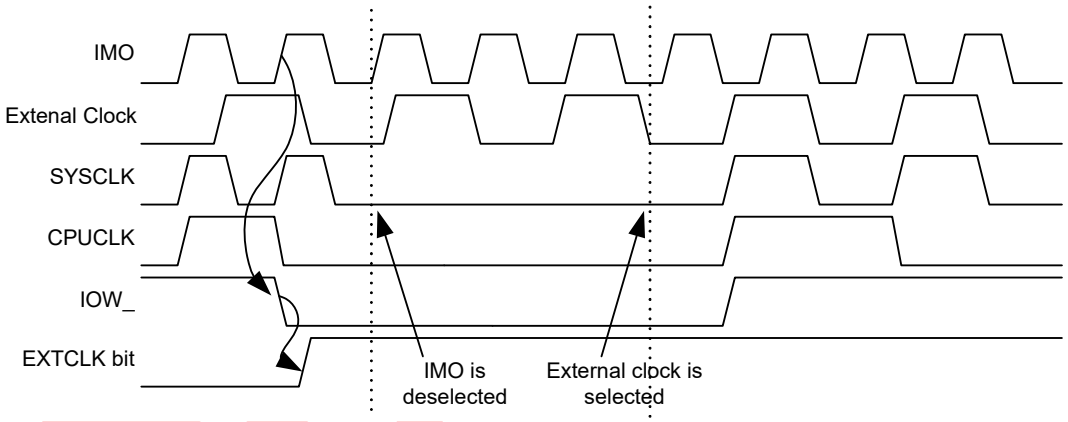

Figure 21-4. Switch from IMO to External Clock with the CPU Running with a CPU Clock Divider of One

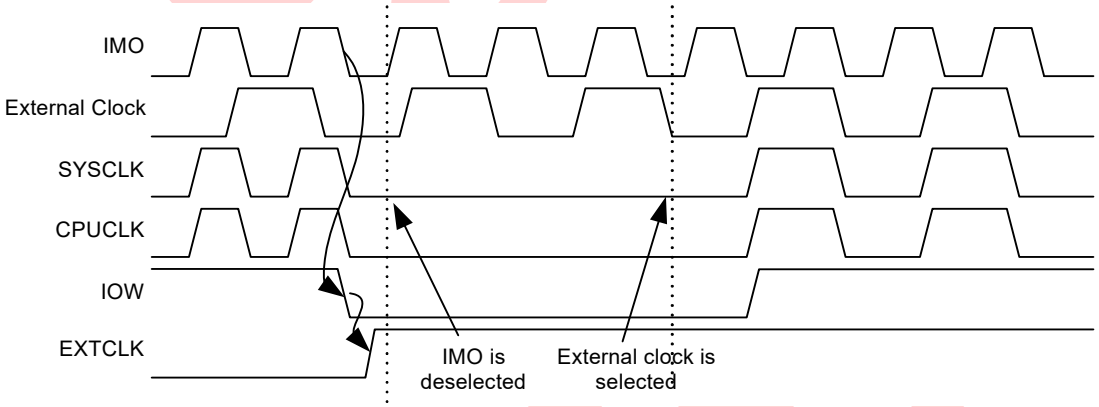

OBSOLETE

21.2 Register Definitions

The following registers are associated with the Digital Clocks and are listed in address order. Each register description has an associated register table showing the bit structure for that register. For a complete table of digital clock registers, refer to the "Summary Table of the System Resource Registers" on page 210.

The bits in the tables that are grayed out throughout this manual are reserved bits and are not detailed in the register descriptions that follow. Reserved bits should always be written with a value of '0'.

21.2.1 INT_CLR0 Register

Add.	Name	Bit 7	Bit 6	Bit 5	Bit 4	Bit 3	Bit 2	Bit 1	Bit 0	Access
0,DAh	INT_CLR0	VC3	Sleep	GPIO	UVLO		Analog 1	Analog 0	V Monitor	RW : 00

The Interrupt Clear Register 0 (INT_CLR0) is used to enable the individual interrupt sources' ability to clear posted interrupts.

Bit 7: VC3. The digital clocks only use bit 7 of the INT_CLR0 register for the VC3 clock. This bit controls the VC3 clock interrupt status.

Bits 6 to 0. The INT_CLR0 register holds bits that are used by several different resources. For a full discussion of the INT_CLR0 register, see the INT_CLRx Registers in the Interrupt Controller chapter on page 71.

For additional information, refer to the INT_CLR0 register on page 445.

21.2.2 INT_MSK0 Register

Add.	Name	Bit 7	Bit 6	Bit 5	Bit 4	Bit 3	Bit 2	Bit 1	Bit 0	Access
0,E0h	INT_MSK0	VC3	Sleep	GPIO	UVLO		Analog 1	Analog 0	V Monitor	RW : 00

The Interrupt Mask Register 0 (INT_MSK0) is used to enable the individual sources' ability to create pending interrupts.

Bit 7: VC3. The digital clocks only use bit 7 of the INT_CLR0 register for the VC3 clock. This bit controls the VC3 clock interrupt enable.

Bits 6 to 0. The INT_MSK0 register holds bits that are used by several different resources. For a full discussion of the INT_MSK0 register, see the INT_MSKx Registers in the Interrupt Controller chapter on page 71.

For additional information, refer to the INT_MSK0 register on page 454.

OBSOLETE

21.2.3 OSC_GO_EN Register

Address	Name	Bit 7	Bit 6	Bit 5	Bit 4	Bit 3	Bit 2	Bit 1	Bit 0	Access
1,DDh	OSC_GO_EN	SLPINT	VC3	VC2	VC1	SYSCLKX2	SYSCLK	CLK24M	CLK32K	RW : 00

The Oscillator to Global Outputs Enable Register (OSC_GO_EN) is used to enable tri-state buffers that connect specific system clocks to specific global output even nets.

The OSC_GO_EN register holds eight bits which independently enable a tristate buffer to drive a clock on to a global net. In all cases, the clock is driven on to one of the nets in the Global Output Even (GOE) bus. In all cases, these bits should only be set and the resulting clock signal on the global be used when the clock frequency is less than or equal to the maximum ***switching*** frequency of the global buses (12 MHz). Therefore, bits 2 and 3 are only useful when the PowerPSoC device is in external clocking mode and bit 1 may never be used.

Bit 7: SLPINT. This bit provides the option to connect the sleep interrupt signal to GOE[7]. This may be useful in real-time clock applications where very low power is required. By driving the sleep interrupt to a global, it may then be routed to a digital PSoC block. The digital PSoC block may then count several sleep interrupts before generating its own interrupt, which would be used to bring the PowerPSoC device out of the sleep state.

Bit 6: VC3. This bit enables the driving of the VC3 clock onto GOE[6].

Bit 5: VC2. This bit enables the driving of the VC2 clock onto GOE[5].

Bit 4: VC1. This bit enables the driving of the VC1 clock onto GOE[4].

Bit 3: SYSCLKX2. This bit enables the driving of the SYSCLKX2 clock onto GOE[3].

Bit 2: SYSCLK. This bit enables the driving of the SYSCLK clock onto GOE[2].

Bit 1: CLK24M. This bit enables the driving of the 24 Mhz clock onto GOE[1].

Bit 0: CLK32K. This bit enables the driving of the 32 kHz clock onto GOE[0].

For additional information, refer to the OSC_GO_EN register on page 502.

OBSOLETE

21.2.4 OSC_CR4 Register

Address	Name	Bit 7	Bit 6	Bit 5	Bit 4	Bit 3	Bit 2	Bit 1	Bit 0	Access
1,DEh	OSC_CR4							VC3 Input Select[1:0]		RW : 00

The Oscillator Control Register 4 (OSC_CR4) selects the input clock to variable clock 3 (VC3).

Bits 1 and 0: VC3 Input Select [1:0]. The VC3 clock net is the only clock net with the ability to generate an interrupt. The input clock of VC3 comes from a configurable source. As shown in Figure 21-1 on page 214, a 4-to-1 mux determines the clock that is used in the input to the VC3 divider. The mux allows either the 48 MHz, 24 MHz, VC1, or VC2 clocks to be used as the input clock to the divider. Because the selection of a clock for the VC3 divider is performed by a simple 4-to-1 mux, ***runt pulses*** and glitches may be injected to the VC3 divider when the OSC_CR4[1:0] bits are changed. Care should be taken to ensure that blocks using the VC3 clock are either disabled when OSC_CR4[1:0] is changed or not sensitive to glitches. Unlike the VC1 and VC2 clock dividers, the VC3 clock divider is 8-bits wide. Therefore, there are 256 valid divider values as indicated by Table 21-3.

It is important to remember that even though the VC3 divider has four choices for the input clock, none of the choices have fixed frequencies for all device configurations. Both the 24 MHz and 48 MHz clocks may have very different frequencies if an external clock is in use. Also, the divider values for the VC1 and VC2 inputs to the mux must be considered.

Table 21-2. OSC_CR4[1:0] Bits: VC3

Bits	Multiplexer Output
00b	SYSCLK
01b	VC1
10b	VC2
11b	SYSCLKX2

For additional information, refer to the OSC_CR4 register on page 503.

OBSOLETE

21.2.5 OSC_CR3 Register

Address	Name	Bit 7	Bit 6	Bit 5	Bit 4	Bit 3	Bit 2	Bit 1	Bit 0	Access
1,DFh	OSC_CR3	VC3 Divider[7:0]								RW : 00

The Oscillator Control Register 3 (OSC_CR3) selects the divider value for variable clock 3 (VC3).

Bits 7 to 0: VC3 Divider[7:0]. As an example of the flexibility of the clocking structure in PowerPSoC devices, consider a device that is running off of an externally supplied clock at a frequency of 93.7 kHz. This clock value may be divided by the VC1 divider to achieve a VC1 clock net frequency of 5.89 kHz. The VC2 divider could reduce the frequency by another factor of 16, resulting in a VC2 clock net frequency of 366.02 Hz. Finally, the VC3 divider may choose VC2 as its input clock and divide by 256, resulting in a VC3 clock net frequency of 1.43 Hz.

Table 21-3. OSC_CR3[7:0] Bits: VC3 Divider Value

Bits	Divider Source Clock			
	SYSCLKX2	SYSCLK	VC1	VC2
00h	SYSCLKX2	SYSCLK	VC1	VC2
01h	SYSCLKX2 / 2	SYSCLK / 2	VC1 / 2	VC2 / 2
02h	SYSCLKX2 / 3	SYSCLK / 3	VC1 / 3	VC2 / 3
03h	SYSCLKX2 / 4	SYSCLK / 4	VC1 / 4	VC2 / 4
...	...	...	...	...
FCh	SYSCLKX2 / 253	SYSCLK / 253	VC1 / 253	VC2 / 253
FDh	SYSCLKX2 / 254	SYSCLK / 254	VC1 / 254	VC2 / 254
FEh	SYSCLKX2 / 255	SYSCLK / 255	VC1 / 255	VC2 / 255
FFh	SYSCLKX2 / 256	SYSCLK / 256	VC1 / 256	VC2 / 256

The VC3 clock net can generate a system interrupt. Once the input clock and the divider value for the VC3 clock are chosen, only one additional step is needed to enable the interrupt; the VC3 mask bit must be set in register INT_MSK0[7]. Once the VC3 mask bit is set, the VC3 clock generates pending interrupts every number of clock periods equal to the VC3 divider register value plus one. Therefore, if the VC3 divider register's value is 05h (divide by 6), an interrupt would occur every six periods of the VC3's input clock. Another example would be if the divider value was 00h (divide by one), an interrupt would be generated on every period of the VC3 clock. The VC3 mask bit only controls the ability of a posted interrupt to become pending. Because there is no enable for the VC3 interrupt, VC3 interrupts will always be posting. See the Interrupt Controller chapter on page 71 for more information on posting and pending.

For additional information, refer to the OSC_CR3 register on page 504.

OBSOLETE

21.2.6 OSC_CR0 Register

Address	Name	Bit 7	Bit 6	Bit 5	Bit 4	Bit 3	Bit 2	Bit 1	Bit 0	Access
1,E0h	OSC_CR0			No Buzz	Sleep[1:0]		CPU Speed[2:0]			RW : 00

The Oscillator Control Register 0 (OSC_CR0) is used to configure various features of internal clock sources and clock nets.

Bit 5: No Buzz. Normally, when the Sleep bit is set in the CPU_SCR register, all PowerPSoC device systems are powered down, including the bandgap reference. However, to facilitate the detection of POR and LVD events at a rate higher than the sleep interval, the bandgap circuit is powered up periodically (for about 60 µs) at the Sleep System Duty Cycle, which is independent of the sleep interval and typically higher. When the No Buzz bit is set, the Sleep System Duty Cycle value is overridden and the bandgap circuit is forced to be on during sleep. This results in faster response to an LVD or POR event (continuous detection as opposed to periodic), at the expense of slightly higher average sleep current.

Bits 4 and 3: Sleep[1:0]. The available sleep interval selections are shown in Table 21-4. Remember that when the ILO is the selected 32 kHz clock source, sleep intervals are approximate.

Table 21-4. Sleep Interval Selections

Sleep Interval OSC_CR[4:3]	Sleep Timer Clocks	Sleep Period (nominal)	Watchdog Period (nominal)
00b (default)	64	1.95 ms	6 ms
01b	512	15.6 ms	47 ms
10b	4096	125 ms	375 ms
11b	32,768	1 sec	3 sec

Bits 2 to 0: CPU Speed[2:0]. The PSoC M8C may operate over a range of CPU clock speeds (Table 21-5), allowing the M8C's performance and power requirements to be tailored to the application.

The reset value for the CPU speed bits is zero. Therefore, the default CPU speed is one-eighth of the clock source. The internal main oscillator is the default clock source for the CPU speed circuit; therefore, the default CPU speed is 3 MHz.

The CPU frequency is changed with a write to the OSC_CR0 register. There are eight frequencies generated from a power-of-two divide circuit, which are selected by a 3-bit code. At any given time, the CPU 8-to-1 clock mux is selecting one of the available frequencies, which is resynchronized to the 24 MHz master clock at the output.

Regardless of the CPU speed bit's setting, if the actual CPU speed is greater than 12 MHz, the 24 MHz operating requirements apply. An example of this scenario is a device that is configured to use an external clock, which is supplying a frequency of 20 MHz. If the CPU speed register's value is 0x03, the CPU clock is 20 MHz. Therefore, the supply voltage requirements for the device are the same as if the part was operating at 24 MHz off of the internal main oscillator. The operating voltage requirements are not relaxed until the CPU speed is at 12.0 MHz or less.

Table 21-5. OSC_CR0[2:0] Bits: CPU Speed

Bits	24 MHz Internal Main Oscillator	External Clock
000b	3 MHz	EXTCLK/ 8
001b	6 MHz	EXTCLK/ 4
010b	12 MHz	EXTCLK/ 2
011b	24 MHz	EXTCLK/ 1
100b	1.5 MHz	EXTCLK/ 16
101b	750 kHz	EXTCLK/ 32
110b	187.5 kHz	EXTCLK/ 128
111b	93.7 kHz	EXTCLK/ 256

An automatic protection mechanism is available for systems that need to run at peak CPU clock speed but cannot guarantee a high enough supply voltage for that clock speed. See the LVDTBEN bit in the "VLT_CR Register" on page 264 for more information.

For additional information, refer to the OSC_CR0 register on

PRELIMINARY

21.2.7 OSC_CR1 Register

Address	Name	Bit 7	Bit 6	Bit 5	Bit 4	Bit 3	Bit 2	Bit 1	Bit 0	Access
1,E1h	OSC_CR1	VC1 Divider[3:0]				VC2 Divider[3:0]				RW : 00

The Oscillator Control Register 1 (OSC_CR1) selects the divider value for variable clocks 1 and 2 (VC1 and VC2).

Bits 7 to 4: VC1 Divider[3:0]. The VC1 clock net is one of the variable clock nets available in the PSoC M8C. The source for the VC1 clock net is a simple 4-bit divider. The source for the divider is the 24 MHz system clock; however, if the device is configured to use an external clock, the input to the divider is the external clock. Therefore, the VC1 clock net is not always the result of dividing down a 24 MHz clock. The 4-bit divider that controls the VC1 clock net may be configured to divide, using any integer value between 1 and 16. Table 21-6 lists all values for the VC1 clock net.

Bits 3 to 0: VC2 Divider[3:0]. The VC2 clock net is one of the variable clock nets available in the PSoC M8C. The source for the VC2 clock net is a simple 4-bit divider. The source for the divider is the VC1 clock net. The 4-bit divider that controls the VC2 clock net may be configured to divide, using any integer value between 1 and 16. Table 21-7 lists all values for the VC2 clock net.

Table 21-6. OSC_CR1[7:4] Bits: VC1 Divider Value

Bits	Divider Source Clock	
	Internal Main Oscillator at 24 MHz	External Clock
0h	24 MHz	EXTCLK / 1
1h	12 MHz	EXTCLK / 2
2h	8 MHz	EXTCLK / 3
3h	6 MHz	EXTCLK / 4
4h	4.8 MHz	EXTCLK / 5
5h	4 MHz	EXTCLK / 6
6h	3.43 MHz	EXTCLK / 7
7h	3 MHz	EXTCLK / 8
8h	2.67 MHz	EXTCLK / 9
9h	2.40 MHz	EXTCLK / 10
Ah	2.18 MHz	EXTCLK / 11
Bh	2.00 MHz	EXTCLK / 12
Ch	1.85 MHz	EXTCLK / 13
Dh	1.71 MHz	EXTCLK / 14
Eh	1.6 MHz	EXTCLK / 15
Fh	1.5 MHz	EXTCLK / 16

Table 21-7. OSC_CR1[3:0] Bits: VC2 Divider Value

Bits	Divider Source Clock	
	Internal Main Oscillator	External Clock
0h	(24 / (OSC_CR1[7:4]+1)) / 1	(EXTCLK / (OSC_CR1[7:4]+1)) / 1
1h	(24 / (OSC_CR1[7:4]+1)) / 2	(EXTCLK / (OSC_CR1[7:4]+1)) / 2
2h	(24 / (OSC_CR1[7:4]+1)) / 3	(EXTCLK / (OSC_CR1[7:4]+1)) / 3
3h	(24 / (OSC_CR1[7:4]+1)) / 4	(EXTCLK / (OSC_CR1[7:4]+1)) / 4
4h	(24 / (OSC_CR1[7:4]+1)) / 5	(EXTCLK / (OSC_CR1[7:4]+1)) / 5
5h	(24 / (OSC_CR1[7:4]+1)) / 6	(EXTCLK / (OSC_CR1[7:4]+1)) / 6
6h	(24 / (OSC_CR1[7:4]+1)) / 7	(EXTCLK / (OSC_CR1[7:4]+1)) / 7
7h	(24 / (OSC_CR1[7:4]+1)) / 8	(EXTCLK / (OSC_CR1[7:4]+1)) / 8
8h	(24 / (OSC_CR1[7:4]+1)) / 9	(EXTCLK / (OSC_CR1[7:4]+1)) / 9
9h	(24 / (OSC_CR1[7:4]+1)) / 10	(EXTCLK / (OSC_CR1[7:4]+1)) / 10
Ah	(24 / (OSC_CR1[7:4]+1)) / 11	(EXTCLK / (OSC_CR1[7:4]+1)) / 11
Bh	(24 / (OSC_CR1[7:4]+1)) / 12	(EXTCLK / (OSC_CR1[7:4]+1)) / 12
Ch	(24 / (OSC_CR1[7:4]+1)) / 13	(EXTCLK / (OSC_CR1[7:4]+1)) / 13
Dh	(24 / (OSC_CR1[7:4]+1)) / 14	(EXTCLK / (OSC_CR1[7:4]+1)) / 14
Eh	(24 / (OSC_CR1[7:4]+1)) / 15	(EXTCLK / (OSC_CR1[7:4]+1)) / 15
Fh	(24 / (OSC_CR1[7:4]+1)) / 16	(EXTCLK / (OSC_CR1[7:4]+1)) / 16

For additional information, refer to the OSC_CR1 register on page 506.

OBSOLETE

21.2.8 OSC_CR2 Register

Address	Name	Bit 7	Bit 6	Bit 5	Bit 4	Bit 3	Bit 2	Bit 1	Bit 0	Access
1,E2h	OSC_CR2						EXTCLKEN	RSVD	SYSCLKX-2DIS	RW : 00

The Oscillator Control Register 2 (OSC_CR2) is used to configure various features of internal clock sources and clock nets.

Bit 2: EXTCLKEN. When the EXTCLKEN bit is set, the external clock becomes the source for the internal clock tree, SYSCLK, which drives most PowerPSoC device clocking functions. All external and internal signals, including the 32 kHz clock, derived from the internal low speed oscillator (ILO) are synchronized to this clock source. The external clock input is located on port P1[4]. When using this input, the pin drive mode should be set to High Z (not High Z Analog).

Bit 1: RSVD. This is a reserved bit. It should always be 0.

Bit 0: SYSCLKX2DIS. When set, the Internal Main Oscillator's doubler is disabled. This results in a reduction of overall device power, on the order of 1 mA. It is advised that any application that does not require this doubled clock should have it turned off.

For additional information, refer to the OSC_CR2 register on page 507.

OBSOLETE

OBSOLETE

22. Multiply Accumulate (MAC)

This chapter presents the Multiply Accumulate (MAC) and its associated registers. The MAC block is a fast 8-bit multiplier or a fast 8-bit multiplier with 32-bit accumulate. Refer to Table 22-1 for MAC availability by part number. For a complete table of the MAC registers, refer to the "Summary Table of the System Resource Registers" on page 210. For a quick reference of all PowerPSoC registers in address order, refer to the Register Details chapter on page 361.

22.1 Architectural Description

The MAC is a register-based system resource. Its only interface is the system bus; therefore, there are no special clocks or enables that are required to be sourced from digital or analog PSoC blocks. In devices with more than one MAC block, each MAC is completely independent of the other.

The architectural presentation of the MAC is illustrated in Figure 22-1.

Table 22-1. MAC Availability for PowerPSoC Devices

PowerPSoC Part Number	Number of MAC Blocks
CY8CLED0xx0x	2

Figure 22-1. MAC Block Diagram

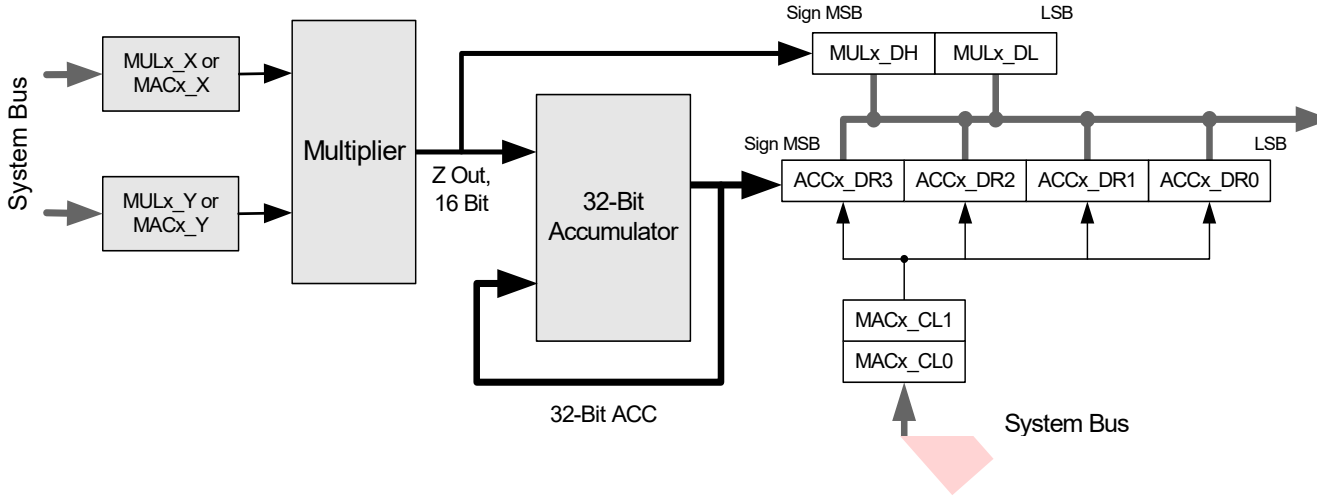

22.2 Application Description

22.2.1 Multiplication with No Accumulation

For simple multiplication, the MAC block accepts two 8-bit signed numbers as the multiplicands for a multiply operation. The product of the multiplication is stored in a 16-bit signed form. Up to four registers are involved with simple multiplication: MULx_X, MULx_Y, MULx_DH, and MULx_DL.

To execute a multiply, simply write a value to either the MULx_X or MULx_Y registers. Immediately after the write of the multiplicand, the product is available at registers MULx_DH and MULx_DL. After reset of the part at power up or after an external reset, the MAC registers will not be reset to zero. Therefore, after the write of the first multiplicand, the product is indeterminate. After the write of the second multiplicand, the product registers are updated with the product of the first and second multiplicands (assuming one of the writes was to MULx_X and the other was to MULx_Y). Multiplication is associative so the order in which you write to X and Y does not matter.

22.2.2 Accumulation After Multiplication

Accumulation of products is a feature that is implemented on top of simple multiplication. When using the MAC to accumulate the products of successive multiplications, two 8-bit signed values are used for input. The product of the multiplication is accumulated as a 32-bit signed value.

The user has the choice to either cause a multiply/accumulate function to take place or a multiply only function. The user selects which operation is performed by choosing of input register. The multiply function occurs immediately whenever the MULx_X or the MULx_Y multiplier input registers are written, and the result is available in the MULx_DH and MULx_DL multiplier result registers, as discussed in the 22.2.1 Multiplication with No Accumulation section. The multiply/accumulate function is executed whenever there is a write to the MACx_X or the MACx_Y multiply/accumulate input registers; the result is available in the ACCx_DR3, ACCx_DR2, ACCx_DR1, and ACCx_DR0 accumulator result registers. A write to the MULx_X or MACx_X registers is input as the X value to both the multiply and multiply/accumulate functions. A write to the MULx_Y or MACx_Y registers is input as the Y value to both the multiply and multiply/accumulate functions. A write to the MACx_CL0 or MACx_CL1 registers will clear the value in the four accumulate registers.

To clear the accumulated products, simply write to either of the MACx_CLx registers.

22.3 Register Definitions

In PowerPSoC devices with more than one MAC block, there will be one of the following registers for each block. The registers in this section are listed in address order.

The following registers are associated with the MAC PSoC Blocks. Each register description has an associated register table showing the bit structure for that register. The ‘X’ in the Access column of some register tables signify that the value after power on reset is unknown. For a complete table of the MAC registers, refer to the “Summary Table of the System Resource Registers” on page 210.

PRELIMINARY

22.3.1 MULx_X Register

Add.	Name	Bit 7	Bit 6	Bit 5	Bit 4	Bit 3	Bit 2	Bit 1	Bit 0	Access
0,A8h	MUL1_X	Data[7:0]								W : XX
0,E8h	MUL0_X	Data[7:0]								W : XX

LEGEND
X The value after power on reset is unknown.

The Multiply Input X Register (MULx_X) is one of two multiplicand registers for the signed 8-bit multiplier in the PSoC MAC.

Bits 7 to 0: Data[7:0]. The multiply X (MULx_X) register is one of two multiplicand registers for the signed 8-bit multiplier in the PSoC MAC. When these write only registers are written, the product of the written value and the current value of the MULx_X registers are calculated.

For additional information, refer to the MULx_X register on page 420.

22.3.2 MULx_Y Register

Add.	Name	Bit 7	Bit 6	Bit 5	Bit 4	Bit 3	Bit 2	Bit 1	Bit 0	Access
0,A9h	MUL1_Y	Data[7:0]								W : XX
0,E9h	MUL0_Y	Data[7:0]								W : XX

LEGEND
X The value after power on reset is unknown.

The Multiply Input Y Register (MULx_Y) is one of two multiplicand registers for the signed 8-bit multiplier in the PSoC MAC.

Bits 7 to 0: Data[7:0]. The multiply Y (MULx_Y) register is one of two multiplicand registers for the signed 8-bit multiplier in the PSoC MAC. When these write only registers are written, the product of the written value and the current value of the MULx_Y registers are calculated.

For additional information, refer to the MULx_Y register on page 421.

22.3.3 MULx_DH Register

Add.	Name	Bit 7	Bit 6	Bit 5	Bit 4	Bit 3	Bit 2	Bit 1	Bit 0	Access
0,AAh	MUL1_DH	Data[7:0]								R : XX
0,EAh	MUL0_DH	Data[7:0]								R : XX

LEGEND
X The value after power on reset is unknown.

The Multiply Result High Byte Register (MULx_DH) holds the most significant byte of the 16-bit product.

Bits 7 to 0: Data[7:0]. The product of the multiply operation on the MULx_X and MULx_Y registers is stored as a signed 16-bit value. The read only multiply data high (MUL0_DH and MUL1_DH) registers hold the most significant byte of the 16-bit product.

For additional information, refer to the MULx_DH register on page 422.

OBSOLETE

22.3.4 MULx_DL Register

Add.	Name	Bit 7	Bit 6	Bit 5	Bit 4	Bit 3	Bit 2	Bit 1	Bit 0	Access
0,ABh	MUL1_DL	Data[7:0]								R : XX
0,EBh	MUL0_DL	Data[7:0]								R : XX

LEGEND
X The value after power on reset is unknown.

The Multiply Result Low Byte Register (MULx_DL) holds the least significant byte of the 16-bit product.

Bits 7 to 0: Data[7:0]. The product of the multiply operation on the MULx_X and MULx_Y registers is stored as a signed 16-bit value. The read only multiply data low (MUL0_DL and MUL1_DL)) registers hold the least significant byte of the 16-bit product.

For additional information, refer to the MULx_DL register on page 423.

22.3.5 MACx_X/ACCx_DR1 Register

Add.	Name	Bit 7	Bit 6	Bit 5	Bit 4	Bit 3	Bit 2	Bit 1	Bit 0	Access
0,ACh	MAC1_X/ ACC1_DR1	Data[7:0]								RW : 00
0,ECh	MAC0_X/ ACC0_DR1	Data[7:0]								RW : 00

The Accumulator Data Register 1 (MACx_X/ACCx_DR1) is the multiply accumulate X register and the second byte of the accumulated value.

Bits 7 to 0: Data[7:0]. This register performs two distinct functions; therefore, two names are used to refer to the same address. When the address is written, a multiply operation with accumulation is performed. The multiply accumulate X (MACx_X) register is one of the two multiplicand registers for the signed 8-bit multiply with accumulate operation. When this register is written, the product of the written value and the current value of the MACx_Y register is calculated, then that product is added to the 32-bit accumulators value. When this address is read, the accumulator's data register 1 is read. This register holds the second of four bytes used to hold the accumulator's value. This byte is the most significant of the lower 16 bits of the accumulator's value.

For additional information, refer to the MACx_X/ACCx_DR1 register on page 424.

OBSOLETE

22.3.6 MACx_Y/ACCx_DR0 Register

Add.	Name	Bit 7	Bit 6	Bit 5	Bit 4	Bit 3	Bit 2	Bit 1	Bit 0	Access
0,ADh	MAC1_Y/ ACC1_DR0	Data[7:0]								RW : 00
0,EDh	MAC0_Y/ ACC0_DR0	Data[7:0]								RW : 00

The Accumulator Data Register 0 (MACx_Y/ACCx_DR0) is the multiply accumulate Y register and the first byte of the accumulated value.

Bits 7 to 0: Data[7:0]. This register performs two distinct functions; therefore, two names are used to refer to the same address. When the address is written, a multiply operation with accumulation is performed. The multiply accumulate Y (MACx_Y) register is one of the two multiplicand registers for the signed 8-bit multiply with accumulate operation. When this register is written, the product of the written value and the current value of the MACx_X register is calculated, then that product is added to the 32-bit accumulators value. When this address is read, the accumulator's data register 0 is read. This register holds the least significant of four bytes used to hold the accumulator's value.

For additional information, refer to the MACx_Y/ACCx_DR0 register on page 425.

22.3.7 MACx_CL0/ACCx_DR3 Register

Add.	Name	Bit 7	Bit 6	Bit 5	Bit 4	Bit 3	Bit 2	Bit 1	Bit 0	Access
0,AEh	MAC1_CL0/ ACC1_DR3	Data[7:0]								RW : 00
0,EEh	MAC0_CL0/ ACC0_DR3	Data[7:0]								RW : 00

The Accumulator Data Register 3 (MACx_CL0/ACCx_DR3) is an accumulator clear register and the fourth byte of the accumulated value.

Bits 7 to 0: Data[7:0]. This register performs two distinct functions; therefore, two names are used to refer to the same address. When the address is written with any value, all 32-bits of the accumulator are reset to zero. When this address is read, the accumulator's data register 3 is read. This register holds the most significant of four bytes used to hold the accumulator's value.

For additional information, refer to the MACx_CL0/ACCx_DR3 register on page 426.

22.3.8 MACx_CL1/ACCx_DR2 Register

Add.	Name	Bit 7	Bit 6	Bit 5	Bit 4	Bit 3	Bit 2	Bit 1	Bit 0	Access
0,AFh	MAC1_CL1/ ACC1_DR2	Data[7:0]								RW : 00
0,EFh	MAC0_CL1/ ACC0_DR2	Data[7:0]								RW : 00

The Accumulator Data Register 2 (MACx_CL1/ACCx_DR2) is an accumulator clear register and the third byte of the accumulated value.

Bits 7 to 0: Data[7:0]. This register performs two distinct functions; therefore, two names are used to refer to the same address. When the address is written with any value, all 32 bits of the accumulator are reset to zero. When this address is read, the accumulator's data register 2 is read. This register holds the third of four bytes used to hold the accumulator's value. This byte is the least significant of the upper 16 bits of the accumulator's value.

For additional information, refer to the MACx_CL1/ACCx_DR2 register on page 427.

OBSOLETE

OBSOLETE

23. Decimator

This chapter explains Type 2 Decimator blocks and its associated registers. The PowerPSoC device has the Type 2 Decimator block. The decimator blocks are a hardware assist for digital signal processing applications. The decimator may be used for delta-sigma analog to digital converters and incremental analog to digital converters. For a complete table of the decimator registers, refer to the "Summary Table of the System Resource Registers" on page 210. For a quick reference of all PowerPSoC registers in address order, refer to the Register Details chapter on page 361.

23.1 Architectural Description

The PowerPSoC device has the Type 2 Decimator block.

Table 23-1. Decimator Availability for PowerPSoC Devices

PowerPSoC Part Number	Type 2 Decimator Block
CY8CLED0xx0x	✓

23.1.1 Type 2 Decimator Block

The type 2 block is a full hardware version of a Sinc2 filter. Integration and re-sampling/differentiation is accomplished in this block. Depending on the operating mode, little or no processing is required on the final output. This greatly reduces the CPU overhead requirement for analog-to-digital conversion functionality.

The major functional units within the type 2 decimator block are shown below.

Figure 23-1. Type 2 Decimator Architecture

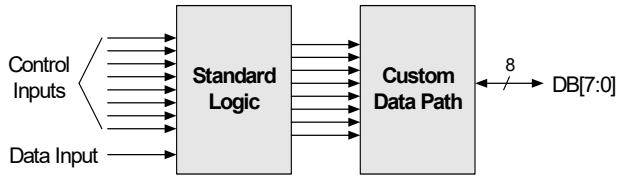

The type 2 decimator block may also be divided into two major functional units: A logic block composed of standard cells and a custom data path block. The architecture of the custom data path block is shown in Figure 23-3. The essential function of the custom block is not just to integrate the single bit data stream over a specific time period, but also to re-sample/differentiate it to obtain the filtered data. Thus, the type 2 decimator block does not depend on external firmware code to perform the decimation process. It does the entire Sinc2 filtering on its own. The type 2 custom data path block implements the 17-bit math, as described in Figure 23-3. The Accumulation and Differentiation tasks follow Figure and Equation 1 in principle.

The principle of operation of a Sinc2 decimation filter is inferred in Figure 23-2 and Equation 1. The decimator's custom data path follows the Accumulation stage of

OBSOLETE

Figure 23-2, in principle. The Differentiation is accomplished with external firmware in user modules.

Figure 23-2. Sinc^2 Filter Block Diagram

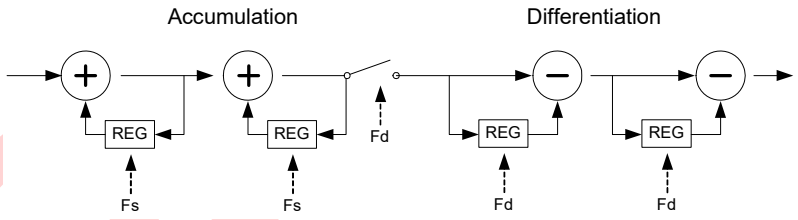

$$H(z) = \text{Transfer function of } Sinc^N \text{ filter with a decimation rate of M}$$
$$H(z) = (1/M)^N\,(1-Z^{-M})^N\,(1/\,(1-Z^{-1}))^N$$

Sinc^2 Transfer Function **Equation 1**

Figure 23-3. Type 2 Decimator Custom Data Path

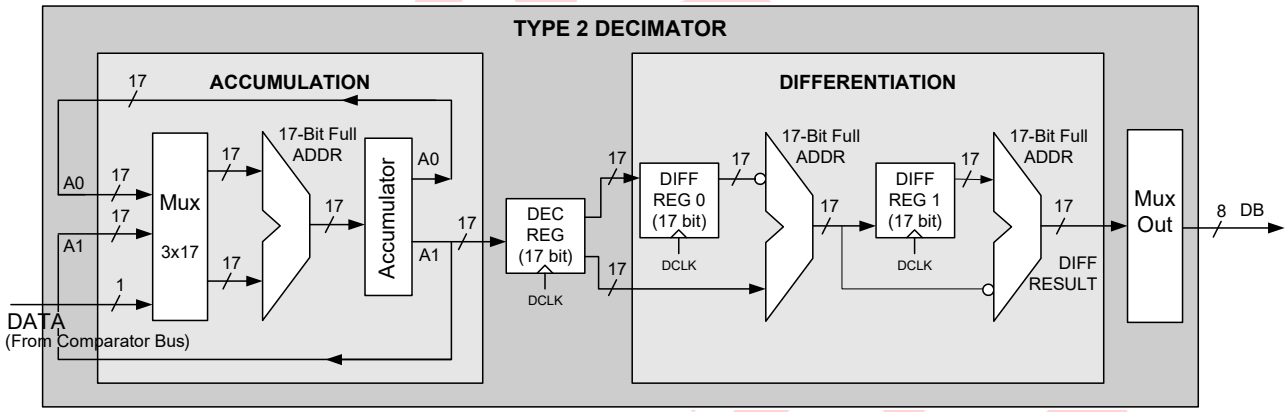

23.1.2 Decimator Scenarios

The architecture of the type 2 decimator block allows the user the option of using an external digital block timer or an internal timer for decimation and interrupt purposes. Type 2 requires the use of an external timer. The scenarios involving the usage of type 2 blocks in a PowerPSoC device are presented in Table 23-2.

Table 23-2. Decimator Type 2 Scenarios for PowerPSoC Devices

PowerPSoC Device	Decimator Type 2 Scenarios	Highlights of Type 2 Decimator Block Usage
CY8CLED0xx0x	Generic case of single type 2 decimator block.	Uses either external or internal timer. Uses Control register: DEC_CR2: 1, E7h. Other associated registers are DEC_DH, DEC_DL, DEC_CR0, DEC_CR1.

23.2 PSoC Device Distinctions

The DEC_CR1 register's bit 7 (ECNT) is reserved in PowerPSoC devices with a type 2 decimator. Refer to the table titled "Decimator Availability for PowerPSoC Devices" on page 231 to determine which type of decimator your PowerPSoC device uses.

23.3 Register Definitions

The following registers are associated with the Decimator and are listed in address order. Each register description has an associated register table showing the bit structure for that register. The bits that are grayed out in the tables are reserved bits and are not detailed in the register description that follows. Reserved bits should always be written with a value of '0'. For a complete table of decimator registers, refer to the "Summary Table of the System Resource Registers" on page 210.

23.3.1 DEC_DH Register

Address	Name	Bit 7	Bit 6	Bit 5	Bit 4	Bit 3	Bit 2	Bit 1	Bit 0	Access
0,E4h	DEC_DH	Data High Byte[7:0]								RC : XX

LEGEND
C Clearable register or bits.
X The value for power after reset is unknown.

The Decimator Data High Register (DEC_DH) is a dual purpose register and is used to read the high byte of the decimator's output or clear the decimator.

Bits 7 to 0: Data High Byte[7:0].

When the register is read, the most significant byte of the 16-bit decimator value is returned. Depending on how the decimator is configured, this value is either the result of the second integration or the high byte of the 16-bit counter.

The second function of the DEC_DH register is activated whenever the register is written: That function is to clear the decimator value. When the DEC_DH register is written, the decimator's value is cleared regardless of the value written. Either the DEC_DH or DEC_DL registers may be written to clear the decimator's value. Note that this register does not reset to 00h. The DEC_DH register resets to an indeterminate value.

For additional information, refer to the DEC_DH register on page 458.

23.3.2 DEC_DL Register

Address	Name	Bit 7	Bit 6	Bit 5	Bit 4	Bit 3	Bit 2	Bit 1	Bit 0	Access
0,E5h	DEC_DL	Data Low Byte[7:0]								RC : XX

LEGEND
C Clearable register or bits.
X The value for power after reset is unknown.

The Decimator Data Low Register (DEC_DL) is a dual purpose register and is used to read the low byte of the decimator's output or clear the decimator.

Bits 7 to 0: Data Low Byte[7:0]. When the register is read, the most significant byte of the 16-bit decimator value is returned. Depending on how the decimator is configured, this value is either the result of the second integration or the high byte of the 16-bit counter.

The second function of the DEC_DL register is activated whenever the register is written: That function is to clear the decimator value. When the DEC_DL register is written, the decimator's value is cleared regardless of the value written. Either the DEC_DH or DEC_DL registers may be written to clear the decimator's value. Note that this register does not reset to 00h. The DEC_DL register resets to an indeterminate value.

For additional information, refer to the DEC_DL register on page 459.

OBSOLETE

23.3.3 DEC_CR0 Register

Address	Name	Bit 7	Bit 6	Bit 5	Bit 4	Bit 3	Bit 2	Bit 1	Bit 0	Access
0,E6h	DEC_CR0			IGEN[1:0]		ICLKS0	DCOL[1:0]		DCLKS0	RW : 00

The Decimator Control Register 0 (DEC_CR0) contains control bits to access hardware support for both the Incremental ADC and the DELISG ADC.

Bits 5 to 4: IGEN[3:0]. For incremental support, the upper four bits, IGEN[1:0], select which column comparator bit is gated by the output of a digital block. The output of that digital block is typically a PWM signal; the high time of which corresponds to the ADC conversion period. This ensures that the comparator output is only processed for the precise conversion time. The digital block selected for the gating function is controlled by ICLKS0 in this register, and ICLKS3, ICLKS2, and ICLKS1 bits in the DEC_CR1 register.

Bit 3: ICLKS0. In conjunction with the ICLKS1, ICLKS2, and ICLKS3 bits in the DEC_CR1 register, these bits select up to 1 of 16 digital blocks (depending on PowerPSoC device resources) to provide the gating signal for an incremental ADC conversion.

Bits 2 and 1: DCOL[1:0]. The DELSIG ADC uses the hardware decimator to do a portion of the post processing computation on the comparator signal. DCOL[1:0] selects the column source for the decimator data (comparator bit) and clock input (PHI clocks).

Bit 0: DCLKS0. The decimator requires a timer signal to sample the current decimator value to an output register that may subsequently be read by the CPU. This timer period is set to be a function of the DELSIG conversion time and may be selected from up to one of eight digital blocks (depending on the PowerPSoC device resources) with DCLKS0 in this register and DCLKS3, DCLKS2, and DCLKS1 in the DEC_CR1 register.

For additional information, refer to the DEC_CR0 register on page 460.

23.3.4 DEC_CR1 Register

Address	Name	Bit 7	Bit 6	Bit 5	Bit 4	Bit 3	Bit 2	Bit 1	Bit 0	Access
0,E7h	DEC_CR1		IDEC	ICLKS3	ICLKS2	ICLKS1	DCLKS3	DCLKS2	DCLKS1	RW : 00

The Decimator Control Register 1 (DEC_CR1) is used to configure the decimator prior to using it.

Bit 6: IDEC. Any function using the decimator requires a digital block timer to sample the current decimator value. Normally, the positive edge of this signal causes the decimator output to be sampled. However, when the IDEC bit is set, the negative edge of the selected digital block input causes the decimator value to be sampled.

Bits 5 to 0: ICLKSx and DCLKSx. The ICLKS3, ICLKS2, ICLKS1, DCLKS3, DCLKS2, and DCLKS1 bits in this register select the digital block sources for Incremental and DELSIGN ADC hardware support (see the DEC_CR0 register).

For additional information, refer to the DEC_CR1 register on page 462.

OBSOLETE

23.3.5 DEC_CR2 Register

Address	Name	Bit 7	Bit 6	Bit 5	Bit 4	Bit 3	Bit 2	Bit 1	Bit 0	Access
1,E7h	DEC_CR2	Mode[1:0]		Data Out Shift[1:0]		Data Format	Decimation Rate[2:0]			RW : 00

The Decimator Control Register 2 (DEC_CR2) is used to configure the decimator before use.

Bits 7 and 6: Mode[1:0]. These bits signify the mode of operation of the type 2 decimator block. A ‘00’ in Mode enables the user to configure the type 2 block, where the input data stream is integrated and an external firmware performs the re-sampling/differentiation process required to complete the Sinc2 filtering. If Mode is ‘01’, the decimator block can be used in an incremental mode. If a decimator-based incremental ADC is to be configured, the Mode bits are set to ‘01’. The full algorithm (when Mode is set to ‘10’) implies the usage of the decimator as a Sinc2 block, to be used in delta-sigma ADCs. The selection of ‘11’ for Mode is reserved.

Bits 5 and 4: Data Out Shift[1:0]. These bits are determined from Table 23-3, which enumerates the available operating modes. To compute the effective resolution, the following equations are used:

Single Modulator: (log2 (Decimation Rate) – 1) * 1.5
Double Modulator: (log2 (Decimation Rate) – 1) * 2

Table 23-3. Decimator Data Output Shift

Decimation Rate	Modulator Type	Effective Resolution	Shift
32	Single	6	4
32	Double	8	2
64	Single	*8 (7.5)	4
64	Double	10	2
128	Single	9	5
128	Double	12	2
256	Single	*11 (10.5)	5
256	Double	14	2

Bit 3: Data Format. The Data Format bit can be weighted as signed (2s complement output) or unsigned (offset binary data).

Bits 2 to 0: Decimation Rate[2:0]. The Decimation Rate for type 2 decimator blocks is ‘000’, since the external timer controls the decimation rate and interrupt.

For additional information, refer to the DEC_CR2 register on page 510.

PRELIMINARY

OBSOLETE

24. I²C

This chapter explains the I²C™ block and its associated registers. The I2C communications block is a serial processor designed to implement a complete I2C slave or master. For a complete table of the I2C registers, refer to the "Summary Table of the System Resource Registers" on page 210. For a quick reference of all PowerPSoC registers in address order, refer to the Register Details chapter on page 361.

24.1 Architectural Description

The I2C communications block is a serial to parallel processor, designed to interface the PowerPSoC device to a two-wire I2C serial communications bus. To eliminate the need for excessive M8C microcontroller intervention and overhead, the block provides I2C specific support for status detection and generation of framing bits.

The I2C block directly controls the data (SDA) and clock (SCL) signals to the external I2C interface, through connections to two dedicated GPIO pins. The PowerPSoC device firmware interacts with the block through I/O (input/output) register reads and writes, and firmware synchronization will be implemented through polling and/or interrupts.

PowerPSoC I2C features include:

- Master/Slave, Transmitter/Receiver operation
- Byte processing for low CPU overhead
- Interrupt or polling CPU interface
- Master clock rates: 50K, 100K, 400K
- Multi-master clock synchronization
- Multi-master mode arbitration support
- 7- or 10-bit addressing (through firmware support)
- SMBus operation (through firmware support)

Hardware functionality provides basic I2C control, data, and status primitives. A combination of hardware support and firmware command sequencing provides a high degree of flexibility for implementing the required I2C functionality.

Hardware limitations in regards to I2C are as follows:

1. There is no hardware support for automatic address comparison. When Slave mode is enabled, every slave address will cause the block to interrupt the PowerPSoC device and possibly stall the bus.
2. Since receive and transmitted data are not buffered, there is no support for automatic receive acknowledge. The M8C microcontroller must intervene at the boundary of each byte and either send a byte or ACK received bytes.

The I2C block is designed to support a set of primitive operations and detect a set of status conditions specific to the I2C protocol. These primitive operations and conditions are manipulated and combined at the firmware level to support the required data transfer modes. The CPU will set up control options and issue commands to the unit through I/O writes and obtain status through I/O reads and interrupts.

The block operates as either a slave, a master, or both. When enabled in Slave mode, the unit is always listening for a Start condition, or sending or receiving data. Master mode can work in conjunction with Slave mode. The master supplies the ability to generate the START or STOP condition and determine if other masters are on the bus. For Mult-Master mode, clock synchronization is supported. If Master mode is enabled and Slave mode is not enabled, the block does not generate interrupts on externally generated Start conditions.

24.1.1 Basic I²C Data Transfer

Figure 24-1 shows the basic form of data transfers on the I2C bus with a 7-bit address format. (For a more detailed description, see the See the Philips Semiconductors (now NXP Semiconductors) I²C-Bus Specification, version 2.1.)

A Start condition (generated by the master) is followed by a data byte, consisting of a 7-bit slave address (there is also a 10-bit address mode) and a Read/Write (RW) bit. The RW bit sets the direction of data transfer. The addressed slave is required to acknowledge (ACK) the bus by pulling the data line low during the ninth bit time. If the ACK is received, the transfer may proceed and the master can transmit or receive an indeterminate number of bytes, depending on the RW direction. If the slave does not respond with an ACK for any reason, a Stop condition is generated by the master to terminate the transfer or a Restart condition may be generated for a retry attempt.

OBSOLETE

Figure 24-1. Basic I²C Data Transfer with 7-Bit Address Format

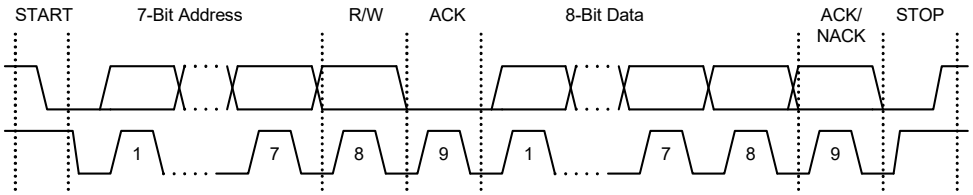

24.2 Application Description

24.2.1 Slave Operation

Assuming Slave mode is enabled, it is continually listening to or on the bus for a Start condition. When detected, the transmitted Address/RW byte is received and read from the I2C block by firmware. At the point where eight bits of the address/RW byte have been received, a byte complete interrupt is generated. On the following low of the clock, the bus is stalled by holding the SCL line low, until the PowerPSoC device has had a chance to read the address byte and compare it to its own address. It will issue an ACK or NACK command based on that comparison.

If there is an address match, the RW bit determines how the PowerPSoC device will sequence the data transfer in Slave mode, as shown in the two branches of Figure 24-2. I2C handshaking methodology (slave holds the SCL line low to "stall" the bus) will be used as necessary, to give the PowerPSoC device time to respond to the events and conditions on the bus. Figure 24-2 is a graphical representation of a typical data transfer from the slave perspective.

Figure 24-2. Slave Operation

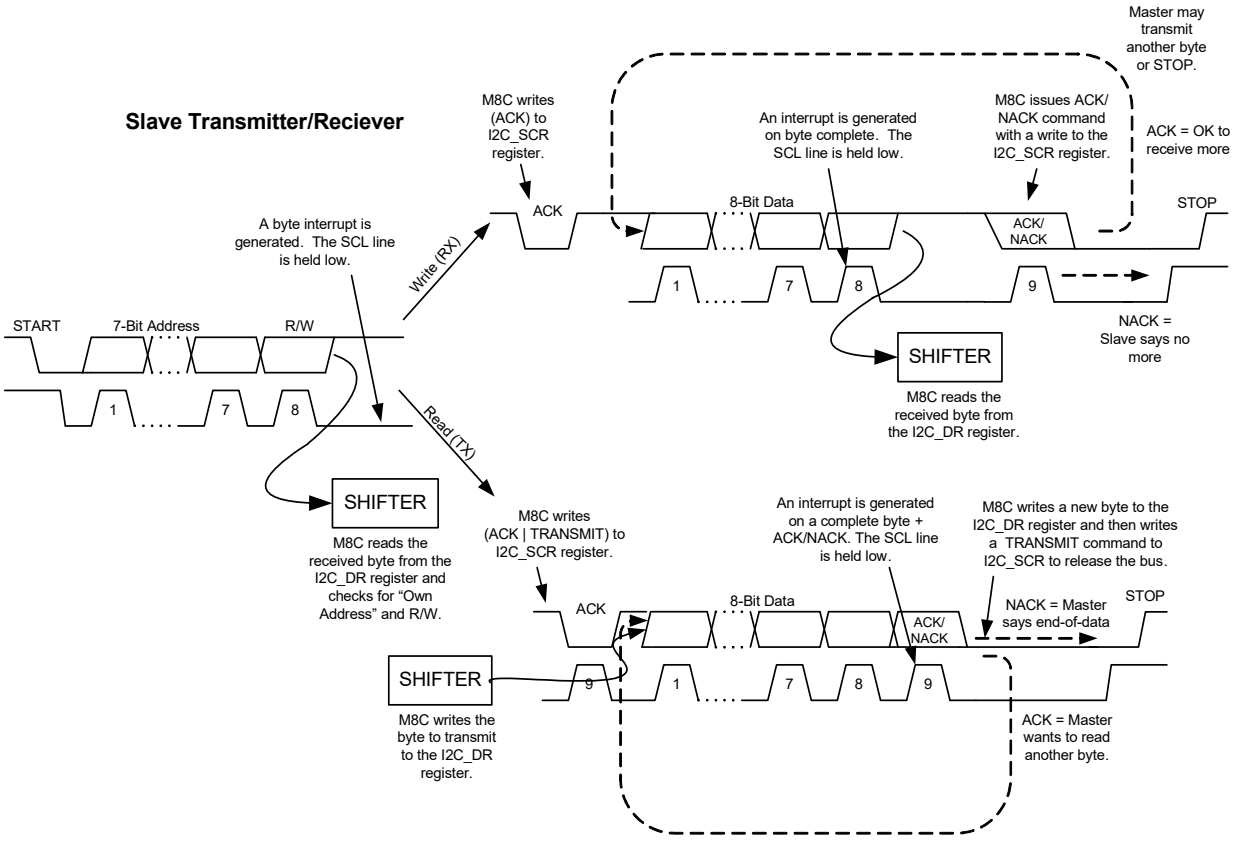

24.2.2 Master Operation

To prepare for a Master mode transaction, the PowerPSoC device must determine if the bus is free. This is done by polling the BusBusy status. If busy, interrupts can be enabled to detect a Stop condition. Once it is determined that the bus is available, firmware should write the address byte into the I2C_DR register and set the Start Gen bit in the I2C_MSCR register.

If the slave sub-unit is not enabled, the block is in Master Only mode. In this mode, the unit does not generate interrupts or stall the I2C bus on externally generated Start conditions.

In a multi-master environment there are two additional outcomes possible:

1. The PowerPSoC device was too late to reserve the bus as a master, and another master may have generated a Start and sent an Address/RW byte. In this case, the unit as a master will fail to generate a Start and is forced into Slave mode. The Start will be pending and eventually occur at a later time when the bus becomes free. When the interrupt occurs in Slave mode, the PowerPSoC device can determine that the Start command was unsuccessful by reading the I2C_MSCR register Start bit, which is reset on successful Start from this unit as master. If this bit is still a '1' on the Start/Address interrupt, it means that the unit is operating in Slave mode. In this case, the data register has the master's address data.
2. If another master starts a transmission at the same time as this unit, arbitration occurs. If this unit loses the arbitration, the LostArb status bit is set. In this case, the block releases the bus and switches to Slave operation. When the Start/Address interrupt occurs, the data register has the winning master's address data.

Figure 24-3 is a graphical representation of a typical data transfer from the master perspective.

Figure 24-3. Master Operation

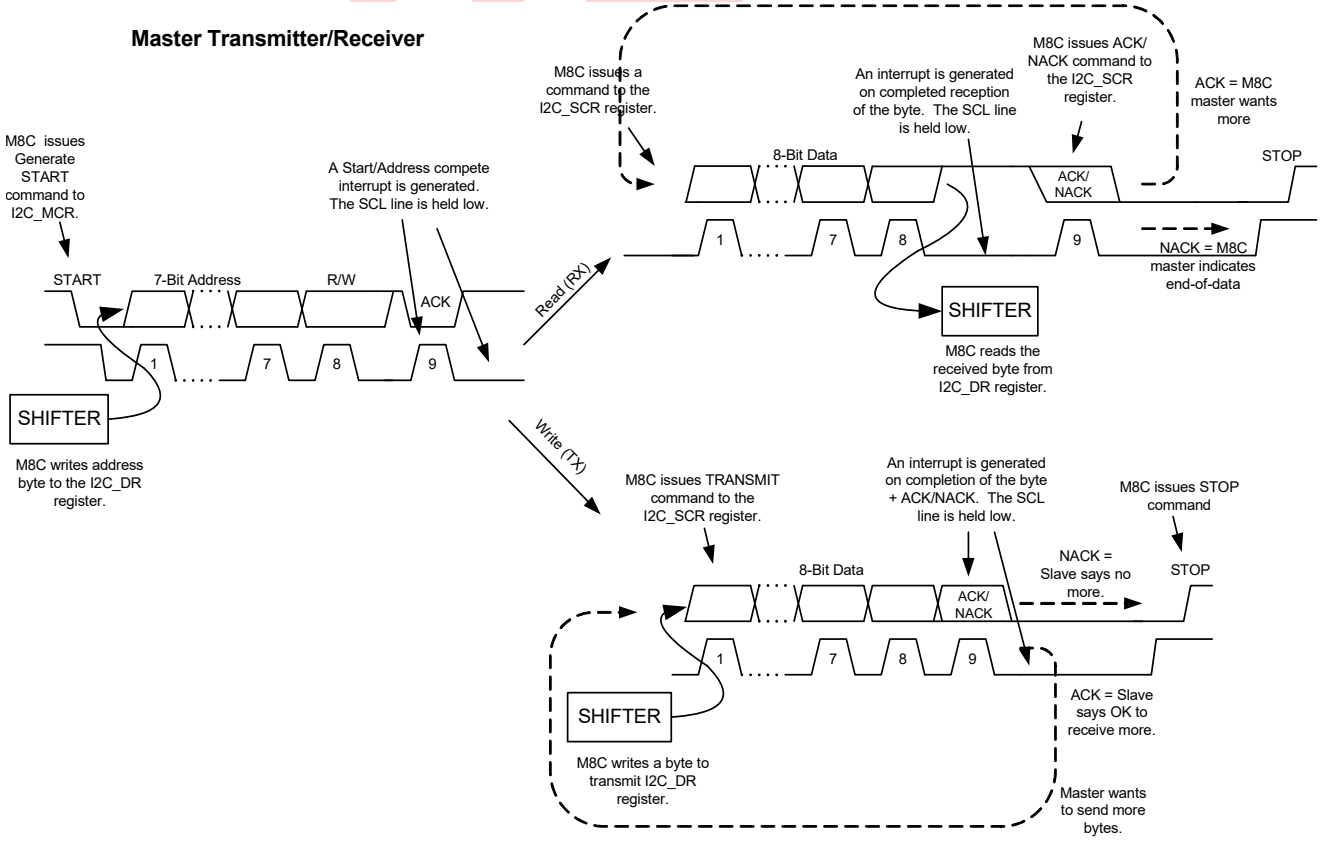

24.3 Register Definitions

The following registers are associated with I2C and are listed in address order. Each register description has an associated register table showing the bit structure for that register. The bits in the tables that are grayed out are reserved bits and are not detailed in the register descriptions that follow. Reserved bits should always be written with a value of '0'. For a complete table of I2C registers, refer to the "Summary Table of the System Resource Registers" on page 210.

24.3.1 I2C_CFG Register

Address	Name	Bit 7	Bit 6	Bit 5	Bit 4	Bit 3	Bit 2	Bit 1	Bit 0	Access
0,D6h	I2C_CFG		PSelect	Bus Error IE	Stop IE	Clock Rate[1:0]		Enable Master	Enable Slave	RW : 00

The I2C Configuration Register (I2C_CFG) is used to set the basic operating modes, baud rate, and selection of interrupts.

The bits in this register control baud rate selection and optional interrupts. The values are typically set once for a given configuration. The bits in this register are all RW.

Table 24-1. I2C_CFG Configuration Register

Bit	Access	Description	Mode
6	RW	I2C Pin Select 0 = P1[7], P1[5] 1 = P1[1], P1[0]	Master/ Slave
5	RW	Bus Error IE Bus error interrupt enable. 0 = Disabled. 1 = Enabled. An interrupt is generated on the detection of a Bus Error.	Master Only
4	RW	Stop IE Stop interrupt enable. 0 = Disabled. 1 = Enabled. An interrupt is generated on the detection of a Stop Condition.	Master/ Slave
3:2	RW	Clock Rate 00 = 100K Standard Mode 01 = 400K Fast Mode 10 = 50K Standard Mode 11 = Reserved	Master/ Slave
1	RW	Enable Master 0 = Disabled 1 = Enabled	Master/ Slave
0	RW	Enable Slave 0 = Disabled 1 = Enabled	Master/ Slave

Bit 6: PSelect. With the default value of zero, the I2C pins are P1[7] for clock and P1[5] for data. When this bit is set, the pins for I2C switch to P1[1] for clock and P1[0] for data. This bit may not be changed while either the Enable Master or Enable Slave bits are set. However, the PSelect bit may be set at the same time as the enable bits. The two sets of pins that may be used on I2C are not equivalent. The default set, P1[7] and P1[5], are the preferred set. The alternate set, P1[1] and P1[0], are provided so that I2C may be used with 8-pin PowerPSoC devices.

If In-circuit System Serial Programming (ISSP) is to be used and the alternate I2C pin set is also used, it is necessary to take into account the interaction between the PowerPSoC Test Controller and the I2C bus. The interface requirements for ISSP should be reviewed to ensure that they are not violated.

Even if ISSP is not used, pins P1[1] and P1[0] will respond differently to a POR or XRES event than other I/O pins. After an XRES event, both pins are pulled down to ground by going into the resistive zero Drive mode, before reaching the High Z drive mode. After a POR event, P1[0] will drive out a one, then go to the resistive zero state for some time, and finally reach the High Z drive mode state. After POR, P1[1] will go into a resistive zero state for a while, before going to the High Z drive mode.

Bit 5: Bus Error IE (Interrupt Enable). This bit controls whether the detection of a bus error will generate an interrupt. A bus error is typically a misplaced Start or Stop.

This is an important interrupt with regards to Master operation. When there is a misplaced Start or Stop on the I2C bus, all slave devices (including this device, if Slave mode is enabled) will reset the bus interface and synchronize to this signal. However, when the hardware detects a bus error in Master Mode operation, the device will release the bus and transition to an idle state. In this case, a Master operation in progress will never have any further status or interrupts associated with it. Therefore, the master may not be able to determine the status of that transaction. An immediate bus error interrupt will inform the master that this transfer did not succeed.

Bit 4: Stop IE (Interrupt Enable). When this bit is set, a master or slave can interrupt on Stop detection. The status bit associated with this interrupt is the Stop Status bit in the Slave Status and Control register. When the Stop Status bit transitions from '0' to '1', the interrupt is generated. It is important to note that the Stop Status bit is not automatically cleared. Therefore, if it is already set, no new interrupts are generated until it is cleared by firmware.

Bits 3 and 2: Clock Rate[1:0]. These bits offer a selection of three sampling and bit rates. All block clocking is based on the SYSCLK input, which is nominally 24 MHz (unless the PowerPSoC device is in external clocking mode). The sampling rate and the baud rate are determined as follows:

- Sample Rate = SYSCLK/Pre-scale Factor
- Baud Rate = 1/(Sample Rate x Samples per Bit)

The nominal values, when using the internal 24 MHz oscillator, are shown in Table 24-2.

Table 24-2. I^2C Clock Rates

Clock Rate [1:0]	I2C Mode	SYSCLK Pre-Scale Factor	Samples per Bit	Internal Sampling Freq./Period (24 MHz)	Master Baud Rate (Nominal)	Start/Stop Hold Time (8 Clocks)
00b	Standard	/16	16	1.5 MHz/667 ns	93.75 kHz	5.3 µs
01b	Fast	/4	16	6 MHz/167 ns	375 kHz	1.33 µs
10b	Standard	/16	32	1.5 MHz/667 ns	46.8 kHz	10.7 µs
11b	Reserved					

When clocking the input with a frequency other than 24 MHz (for example, clocking the PowerPSoC device with an external clock), the baud rates and sampling rates will scale accordingly. Whether the block will work in a Standard Mode or Fast Mode system depends on the sample rate. The sample rate must be sufficient to resolve bus events, such as Start and Stop conditions. (See the Philips Semiconductors (now NXP Semiconductors) I^2C-Bus Specification, version 2.1, for minimum Start and Stop hold times.)

Bit 1: Enable Master. When this bit is set, the Master Status and Control register is enabled (otherwise it is held in reset) and I2C transfers can be initiated in Master mode. When the master is enabled and operating, the block will clock the I2C bus at one of three baud rates, defined in the Clock Rate register. When operating in Master mode, the hardware is multi-master capable, implementing both clock synchronization and arbitration. If the Slave Enable bit is not set, the block will operate in Master Only mode. All external Start conditions are ignored (although the Bus Busy status bit will still keep track of bus activity). Block enable will be synchronized to the SYSCLK clock input (see "Timing Diagrams" on page 247).

Bit 0: Enable Slave. When the slave is enabled, the block generates an interrupt on any Start condition and an address byte that it receives, indicating the beginning of an I2C transfer. When operating as a slave, the block is clocked from an external master. Therefore, the block will work at any frequency up to the maximum defined by the currently selected clock rate. The internal clock is only used in Slave mode, to ensure that there is adequate setup time from data output to the next clock on the release of a slave stall. When the Enable Slave and Enable Master bits are both '0', the block is held in reset and all status is cleared. See Figure 24-3 for a description of the interaction between the Master/Slave Enable bits. Block enable will be synchronized to the SYSCLK clock input (see "Timing Diagrams" on page 247).

Table 24-3. Enable Master/Slave Block Operation

Enable Master	Enable Slave	Block Operation
No	No	Disabled: The block is disconnected from the GPIO pins, P1[5] and P1[7]. (The pins may be used as general purpose I/O.) When either the master or slave is enabled, the GPIO pins are under control of the I2C hardware and are unavailable. All internal registers (except I2C_CFG) are held in reset.
No	Yes	Slave Only Mode: Any external Start condition will cause the block to start receiving an address byte. Regardless of the current state, any Start resets the interface and initiates a Receive operation. Any Stop will cause the block to revert to an idle state The I2C_MSCR register is held in reset.
Yes	No	Master Only Mode: External Start conditions are ignored in this mode. No Byte Complete interrupts on external traffic are generated, but the Bus Busy status bit continues to capture Start and Stop status, and thus may be polled by the master to determine if the bus is available. Full multi-master capability is enabled, including clock synchronization and arbitration. The block will generate a clock based on the setting in the Clock Rate register
Yes	Yes	Master/Slave Mode: Both master and slave may be operational in this mode. The block may be addressed as a slave, but firmware may also initiate Master mode transfers. In this configuration, when a master loses arbitration during an address byte, the hardware will revert to Slave mode and the received byte will generate a slave address interrupt.

For additional information, refer to the I2C_CFG register on page 440.

24.3.2 I2C_SCR Register

Address	Name	Bit 7	Bit 6	Bit 5	Bit 4	Bit 3	Bit 2	Bit 1	Bit 0	Access
0,D7h	I2C_SCR	Bus Error	Lost Arb	Stop Status	ACK	Address	Transmit	LRB	Byte Complete	# : 00

LEGEND

Access is bit specific. Refer to Table 24-4 for detailed bit descriptions.

The I2C Status and Control Register (I2C_SCR) is used by both master and slave to control the flow of data bytes and to keep track of the bus state during a transfer.

This register contains status bits, for determining the state of the current I2C transfer, and control bits, for determining the actions for the next byte transfer. At the end of each byte transfer, the I2C hardware interrupts the M8C microcontroller and stalls the I2C bus on the subsequent low of the clock, until the PowerPSoC device intervenes with the next command. This register may be read as many times as necessary; but on a subsequent write to this register, the bus stall is released and the current transfer will continue.

There are six status bits: Byte Complete, LRB, Address, Stop Status, Lost Arb, and Bus Error. These bits have Read/Clear (R/C) access, which means that they are set by hardware but may be cleared by a write of '0' to the bit position. Under certain conditions, status is cleared automatically by the hardware. These cases are noted in Table 24-4.

There are two control bits: Transmit and ACK. These bits have RW access and may be cleared by hardware.

Bit 7: Bus Error. The Bus Error status detects misplaced Start or Stop conditions on the bus. These may be due to noise, rogue devices, or other devices that are not yet synchronized with the I2C bus traffic. According to the I2C specification, all compatible devices must reset their interface on a received Start or Stop. This is a natural thing to do in Slave mode, because a Start will initiate an address reception and a Stop will idle the slave. In the case of a master, this event will force the master to release the bus and idle. However, since a master does not respond to external Start or Stop conditions, an immediate interrupt on this event allows the master to continue to keep track of the bus state.

A bus error is defined as follows. A Start is only valid if the block is idle (master or slave) or a Slave receiver is ready to receive the first bit of a new byte after an ACK. Any other timing for a Start condition causes the Bus Error bit to be set. A Stop is only valid if the block is idle or a Slave receiver is ready to receive the first bit of a new byte after an ACK. Any other timing for a Stop condition causes the Bus Error bit to be set.

Table 24-4. I2C_SCR Status and Control Register

Bit	Access	Description	Mode
7	RC	Bus Error 1 = A misplaced Start or Stop condition was detected. This status bit must be cleared by firmware with a write of '0' to the bit position. It is never cleared by the hardware.	Master Only
6	RC	Lost Arb 1 = Lost Arbitration. This bit is set immediately on lost arbitration; however, it does not cause an interrupt. This status may be checked after the following Byte Complete interrupt. Any Start detect will automatically clear this bit.	Master Only
5	RC	Stop Status 1 = A Stop condition was detected. This status bit must be cleared by firmware with a write of '0' to the bit position. It is never cleared by the hardware.	Master/ Slave
4	RW	ACK: Acknowledge Out 0 = NACK the last received byte. 1 = ACK the last received byte. This bit is automatically cleared by hardware on the following Byte Complete event.	Master/ Slave
3	RC	Address 1 = The transmitted or received byte is an address. This status bit must be cleared by firmware with a write of '0' to the bit position.	Master/ Slave
2	RW	Transmit 0 = Receive Mode. 1 = Transmit Mode. This bit is set by firmware to define the direction of the byte transfer. Any Start detect will automatically clear this bit.	Master/ Slave
1	RC	LRB: Last Received Bit The value of the ninth bit in a Transmit sequence, which is the acknowledge bit from the receiver. 0 = Last transmitted byte was ACK'ed by the receiver. 1 = Last transmitted byte was NACK'ed by the receiver. Any Start detect will automatically clear this bit.	Master/ Slave
0	RC	Byte Complete Transmit Mode: 1 = 8 bits of data have been transmitted and an ACK or NACK has been received. Receive Mode: 1 = 8 bits of data have been received. Any Start detect will automatically clear this bit.	Master/ Slave

Bit 6: Lost Arb. This bit is set when I2C bus contention is detected, during a Master mode transfer. Contention will occur when a master is writing a '1' to the SDA output line and reading back a '0' on the SDA input line at the given sampling point. When this occurs, the block immediately releases the SDA, but continues clocking to the end of the current byte. On the resulting byte interrupt, firmware can determine that arbitration was lost to another master by reading this bit.

The sequence occurs differently between Master transmitter and Master receiver. As a transmitter, the contention will occur on a data bit. On the subsequent Byte Complete interrupt, the Lost Arbitration status is set. In Receiver mode, the contention will occur on the ACK bit. The master that NACK'ed the last reception will lose the arbitration. However, the hardware will shift in the next byte in response to the winning master's ACK, so that a subsequent Byte Complete interrupt occurs. At this point, the losing master can read the Lost Arbitration status. Contention is checked only at the eight data bit sampling points and one ACK bit sampling point.

Bit 5: Stop Status. Stop status is set on detection of an I2C Stop condition. This bit is sticky, which means that it will remain set until a '0' is written back to it by the firmware. This bit may only be cleared if the Byte Complete status is set. If the Stop Interrupt Enable bit is set, an interrupt is also generated on Stop detection. It is never automatically cleared.

Using this bit, a slave can distinguish between a previous Stop or Restart on a given address byte interrupt. In Master mode, this bit may be used in conjunction with the Stop IE bit, to generate an interrupt when the bus is free. However, in this case, the bit must have previously been cleared prior to the reception of the Stop in order to cause an interrupt.

Bit 4: ACK. This control bit defines the acknowledge data bit that is transmitted out in response to a received byte. When receiving, a Byte Complete interrupt is generated after the eighth data bit is received. On the subsequent write to this register to continue (or terminate) the transfer, the state of this bit will determine the next bit of data that is transmitted. It is ***active high***. A '1' will send an ACK and a '0' will send a NACK.

A Master receiver normally terminates a transfer, by writing a '0' (NACK) to this bit. This releases the bus and automatically generates a Stop condition. A Slave receiver may also send a NACK, to inform the master that it cannot receive any more bytes.

Bit 3: Address. This bit is set when an address has been received. This consists of a Start or Restart, and an address byte. This bit applies to both master and slave.

In Slave mode, when this status is set, firmware will read the received address from the data register and compare it with its own address. If the address does not match, the firmware will write a NACK indication to this register. No further interrupts will occur, until the next address is received. If the address does match, firmware must ACK the received byte, then Byte Complete interrupts are generated on subsequent bytes of the transfer.

This bit will also be set when address transmission is complete in Master mode. If a lost arbitration occurs during the transmission of a master address (indicated by the Lost Arb bit), the block will revert to Slave mode if enabled. This bit then signifies that the block is being addressed as a slave.

If Slave mode is not enabled, the Byte Complete interrupt will still occur to inform the master of lost arbitration.

Bit 2: Transmit. This bit sets the direction of the shifter for a subsequent byte transfer. The shifter is always shifting in data from the I2C bus, but a write of '1' enables the output of the shifter to drive the SDA output line. Since a write to this register initiates the next transfer, data must be written to the data register prior to writing this bit. In Receive mode, the previously received data must have been read from the data register before this write. In Slave mode, firmware derives this direction from the RW bit in the received slave address. In Master mode, the firmware decides on the direction and sets it accordingly.

This direction control is only valid for data transfers. The direction of address bytes is determined by the hardware, depending on the Master or Slave mode.

The Master transmitter terminates a transfer by writing a zero to the transmit bit. This releases the bus and automatically sends a Stop condition, or a Stop/Start or Restart, depending on the I2C_MSCR control bits.

Bit 1: LRB (Last Received Bit). This is the last received bit in response to a previously transmitted byte. In Transmit mode, the hardware will send a byte from the data register and clock in an acknowledge bit from the receiver. On the subsequent byte complete interrupt, firmware will check the value of this bit. A '0' is the ACK value and a '1' is a NACK value. The meaning of the LRB depends on the current operating mode.

Master Transmitter:

'0': ACK. The slave has accepted the previous byte. The master may send another byte by first writing the byte to the I2C_DR register and then setting the Transmit bit in the I2C_SCR register. Optionally, the master may clear the Transmit bit in the I2C_SCR register. This will automatically send a Stop. If the Start or Restart bits are set in the I2C_MSCR register, the Stop may be followed by a Start or Restart.

PRELIMINARY

‘1’: NACK. The slave cannot accept any more bytes. A Stop is automatically generated by the hardware on the subsequent write to the I2C_SCR register (regardless of the value written). However, a Stop/Start or Restart condition may also be generated, depending on whether firmware has set the Start or Restart bits in the I2C_MSCR register.

Slave Transmitter:

‘0’: ACK. The master wants to read another byte. The slave should load the next byte into the I2C_DR register and set the transmit bit in the I2C_SCR register to continue the transfer.

‘1’: NACK. The master is done reading bytes. The slave will revert to IDLE state on the subsequent I2C_SCR write (regardless of the value written).

Bit 0: Byte Complete. The I2C hardware operates on a byte basis. In Transmit mode, this bit is set and an interrupt is generated at the end of nine bits (the transmitted byte + the received ACK). In Receive mode, the bit is set after the eight bits of data are received. When this bit is set, an interrupt is generated at these data sampling points, which are associated with the SCL input clock rising (see details in the Timing section). If the PowerPSoC device responds with a write back to this register before the subsequent falling edge of SCL (which is approximately one-half bit time), the transfer will continue without interruption. However, if the PowerPSoC device is unable to respond within that time, the hardware will hold the SCL line low, stalling the I2C bus. In both Master and Slave mode, a subsequent write to the I2C_SCR register will release the stall.

For additional information, refer to the I2C_SCR register on page 441.

24.3.3 I2C_DR Register

Address	Name	Bit 7	Bit 6	Bit 5	Bit 4	Bit 3	Bit 2	Bit 1	Bit 0	Access
0,D8h	I2C_DR	Data[7:0]								RW : 00

The I2C Data Register (I2C_DR) provides read/write access to the Shift register.

Bits 7 to 0: Data[7:0]. This register is not buffered; and therefore, writes and valid data reads may only occur at specific points in the transfer. These cases are outlined as follows.

- **Master or Slave Receiver** – Data in the I2C_DR register is only valid for reading, when the Byte Complete status bit is set. Data bytes must be read from the register before writing to the I2C_SCR register, which continues the transfer.
- **Master Start or Restart** – Address bytes must be written in I2C_DR before the Start or Restart bit is set in the I2C_MSCR register, which causes the Start or Restart to generate and the address to shift out.
- **Master or Slave Transmitter** – Data bytes must be written to the I2C_DR register before the transmit bit is set in the I2C_SCR register, which causes the transfer to continue.

For additional information, refer to the I2C_DR register on page 443.

OBSOLETE

24.3.4 I2C_MSCR Register

Address	Name	Bit 7	Bit 6	Bit 5	Bit 4	Bit 3	Bit 2	Bit 1	Bit 0	Access
0,D9h	I2C_MSCR					Bus Busy	Master Mode	Restart Gen	Start Gen	R : 00

The I2C Master Status and Control Register (I2C_MSCR) implements I2C framing controls and provides Bus Busy status.

Bit 3: Bus Busy. This read only bit is set to '1' by any Start condition and reset to '0' by a Stop condition. It may be polled by firmware to determine when a bus transfer may be initiated.

Bit 2: Master Mode. This bit indicates that the device is operating as a master. It is set in the detection of this block's Start condition and reset in the detection of the subsequent Stop condition.

Bit 1: Restart Gen. This bit is only used at the end of a master transfer (as noted in Other Cases 1 and 2 of the Start Gen bit). If an address is loaded into the data register and this bit is set prior to NACKing (Master receiver) or resetting the transmit bit (Master transmitter), or after a Master transmitter is NACK'ed by the slave, a Restart condition is generated followed by the transmission of the address byte.

Bit 0: Start Gen. Before setting this bit, firmware must write the address byte to send into the I2C_DR register. When this bit is set, the Start condition is generated followed immediately by the transmission of the address byte. (No control in the I2C_SCR register is needed for the master to initiate a transmission; the direction is inherently "transmit.") The bit is automatically reset to '0' after the Start has been generated.

There are three possible outcomes as a result of setting the Start Gen bit.

1. The bus is free and the Start condition is generated successfully. A Byte Complete interrupt is generated after the Start and the address byte are transmitted. If the address was ACK'ed by the receiver, the firmware may then proceed to send data bytes.
2. The Start command is too late. Another master in a multi-master environment has generated a valid Start and the bus is busy. The resulting behavior depends upon whether Slave mode is enabled.

   Slave mode is enabled: A Start and address byte interrupt is generated. When reading the I2C_MSCR register, the master will see that the Start Gen bit is still set and that the I2C_SCR register has the Address bit set, indicating that the block is addressed as a slave.

   Slave mode is not enabled: The Start Gen bit will remain set and the Start is queued, until the bus becomes free and the Start condition is subsequently generated. An interrupt is generated at a later time, when the Start and address byte has been transmitted.
3. The Start is generated, but the master looses arbitration to another master in a multi-master environment. The resulting behavior depends upon whether Slave mode is enabled.

   Slave mode is enabled: A Start and address byte interrupt is generated. When reading the I2C_MSCR, the master will see that the Start Gen bit cleared, indicating that the Start was generated. However, the Lost Arb bit is set in the I2C_SCR register. The Address status is also set, indicating that the block has been addressed as a slave. The firmware may then ACK or NACK the address to continue the transfer.

   Slave mode is not enabled: A Start and address byte interrupt is generated. The Start Gen bit is cleared and the Lost Arb bit is set. The hardware will wait for command input, stalling the bus if necessary. In this case, the master will clear the I2C_SCR register, to release the bus and allow the transfer to continue, and the block will idle.

Other cases where the Start bit may be used to generate a Start condition are as follows.

1. When a master is finished with a transfer, a NACK is written to the I2C_SCR register (in the case of the Master receiver) or the transmit bit is cleared (in case of a Master transmitter). Normally, the action will free the stall and generate a Stop condition. However, if the Start bit is set and an address is written into the data register prior to the I2C_SCR write, a Stop, followed immediately by a Start (minimum bus free time), is generated. In this way, messages may be chained.

OBSOLETE

2. When a Master transmitter is NAKed, an automatic Stop condition is generated on the subsequent I2C_SCR write. However, if the Start Gen bit has previously been set, the Stop is immediately followed by a Start condition.

Table 24-5. I2C_MSCR Master Status/Control Register

Bit	Access	Description	Mode
3	R	Bus Busy This bit is set to '1' when any Start condition is detected and reset to '0' when a Stop condition is detected.	Master Only
2	R	Master Mode This bit is set to '1' when a start condition, generated by this block, is detected and reset to '0' when a stop condition is detected.	Master Only
1	RW	Restart Gen 1 = Generate a Restart condition. This bit is cleared by hardware when the Start generation is complete.	Master Only
0	RW	Start Gen 1 = Generate a Start condition and send a byte (address) to the I2C bus. This bit is cleared by hardware when the Start generation is complete.	Master Only

For additional information, refer to the I2C_MSCR register on page 444.

OBSOLETE

24.4 Timing Diagrams

24.4.1 Clock Generation

Figure 24-4 illustrates the I2C input clocking scheme. The SYSCLK pin is an input into a four-stage ripple divider that provides the baud rate selections. When the block is disabled, all internal state is held in a reset state. When either the Master or Slave Enable bits in the I2C_CFG register are set, the reset is synchronously released and the clock generation is enabled. Two taps from the ***ripple divider*** are selectable (/4, /16) from the clock rate bits in the I2C_CFG register. If any of the two divider taps is selected, that clock is resynchronized to SYSCLK. The resulting clock is routed to all of the synchronous elements in the design.

Figure 24-4. I^2C Input Clocking

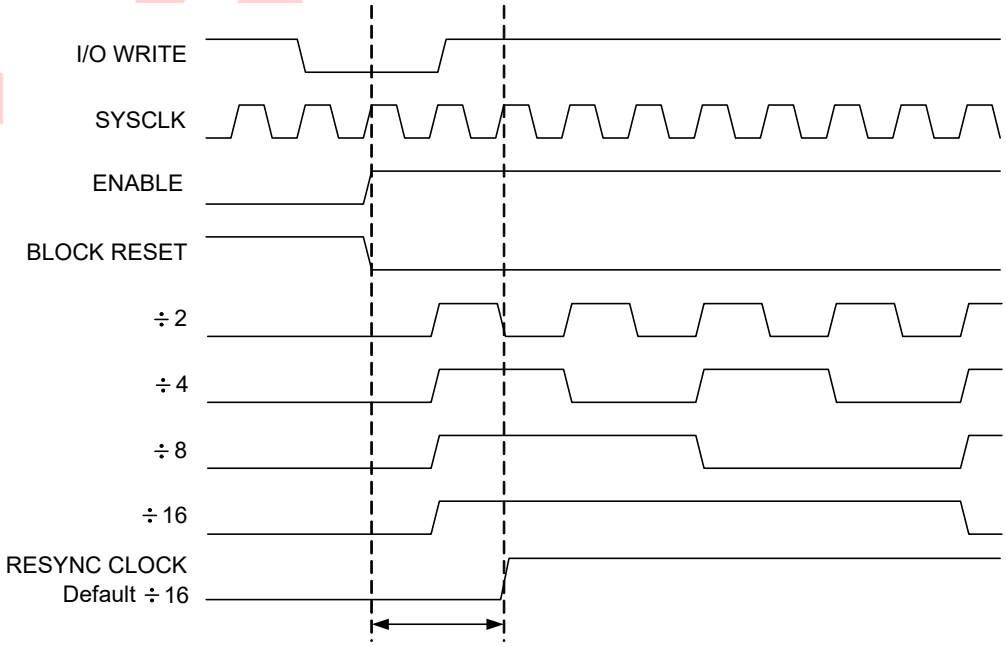

24.4.2 Basic Input/Output Timing

Figure 24-5 illustrates basic input output timing that is valid for both 16 times sampling and 32 times sampling. For 16 times sampling, N=4; and for 32 times sampling, N=12. N is derived from the half-bit rate sampling of eight and 16 clocks, respectively, minus the input latency of three (count of 4 and 12 correspond to 5 and 13 clocks).

Figure 24-5. Basic Input/Output Timing

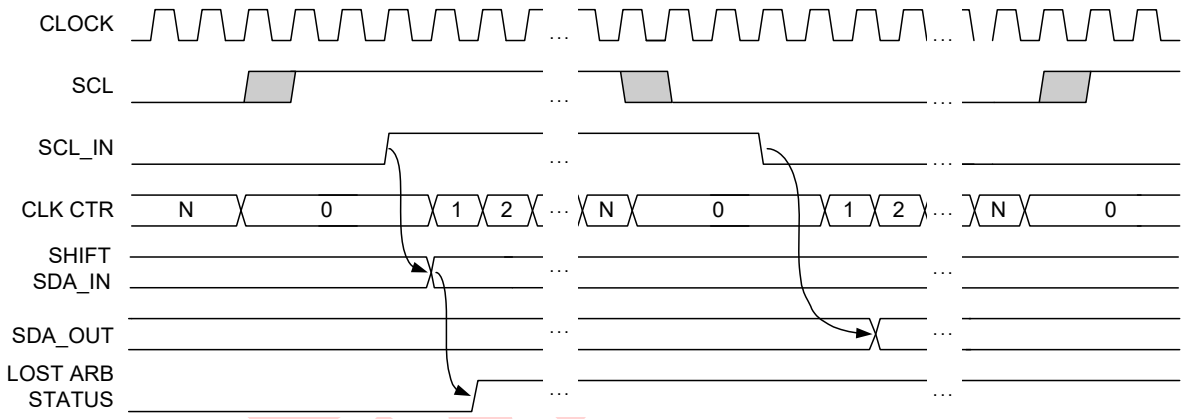

24.4.3 Status Timing

Figure 24-6 illustrates the interrupt timing for Byte Complete, which occurs on the positive edge of the ninth clock (byte + ACK/NACK) in Transmit mode and on the positive edge of the eighth clock in Receive mode. There is a maximum of three cycles of latency, due to the input synchronizer/filter circuit. As shown, the interrupt occurs on the clock following a valid SCL positive edge input transition (after the synchronizers). The Address bit is set with the same timing, but only after a slave address has been received. The LRB (Last Received Bit) status is also set with the same timing, but only on the ninth bit after a transmitted byte.

Figure 24-6. Byte Complete, Address, LRB Timing

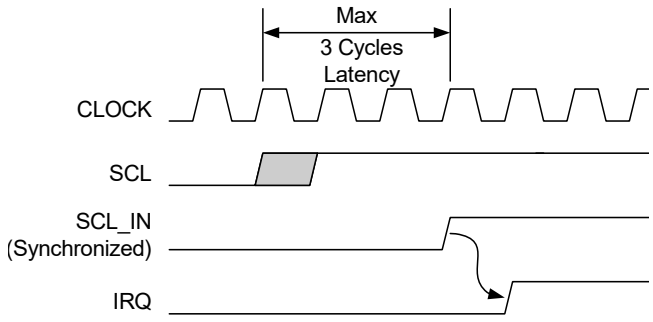

Transmit: Ninth positive edge SCL
Receive: Eighth positive edge SCL

Figure 24-7 shows the timing for Stop Status. This bit is set (and the interrupt occurs) two clocks after the synchronized and filtered SDA line transitions to a '1', when the SCL line is high.

Figure 24-7. Stop Status and Interrupt Timing

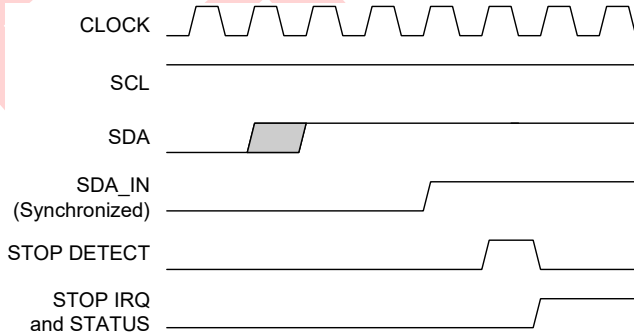

Figure 24-8 illustrates the timing for bus error interrupts. Bus Error status (and Interrupt) occurs one cycle after the internal Start or Stop Detect (two cycles after the filtered and synced SDA input transition).

Figure 24-8. Bus Error Interrupt Timing

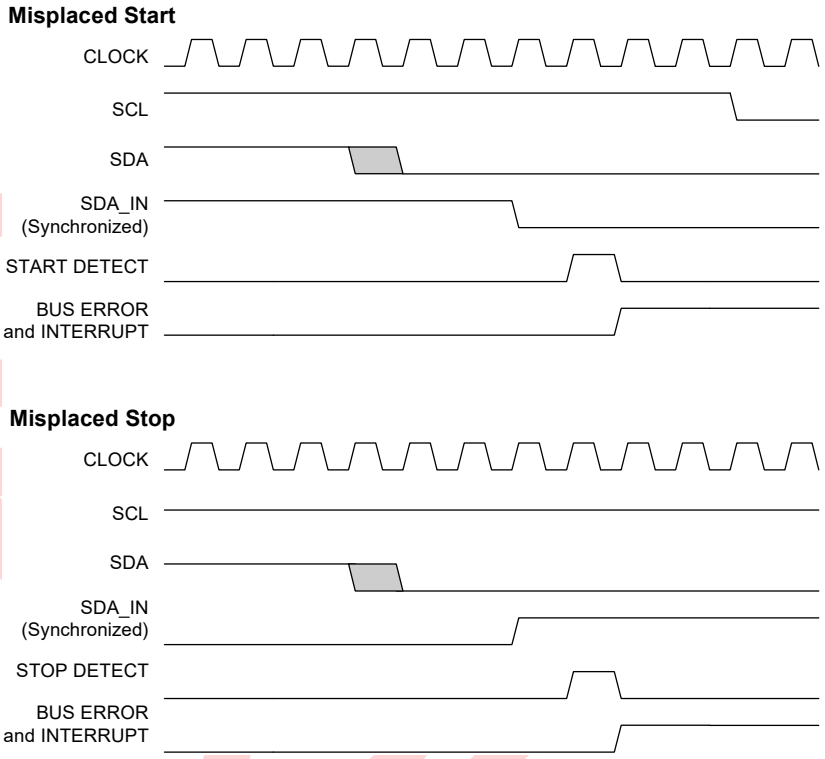

24.4.4 Master Start Timing

When firmware writes the Start Gen command, hardware resynchronizes this bit to SYSCLK, to ensure a minimum of a full SYSCLK of setup time to the next clock edge. When the Start is initiated, the SCL line is left high for 6/14 clocks (corresponding to 16/32 times sampling rates). During this initial SCL high period, if an external Start is detected, the Start sequence is aborted and the block returns to an IDLE state. However, on the next Stop detection, the block will automatically initiate a new Start sequence.

Figure 24-9. Basic Master Start Timing

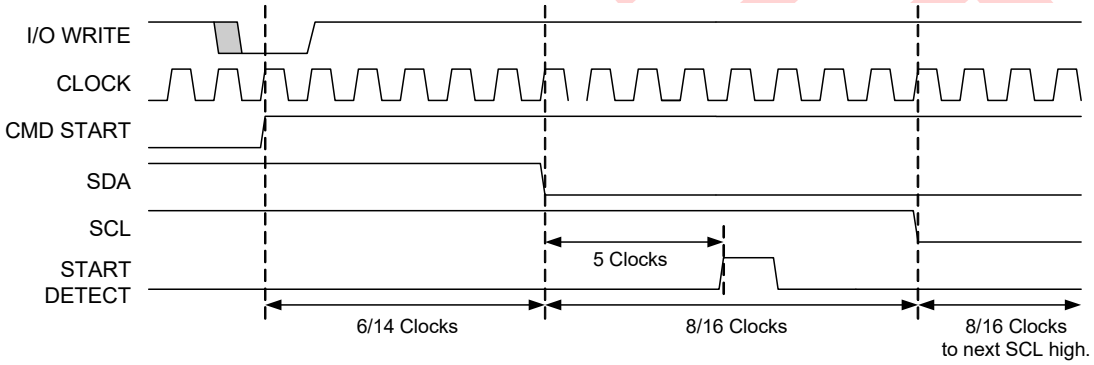

Figure 24-10. Start Timing with a Pending Start

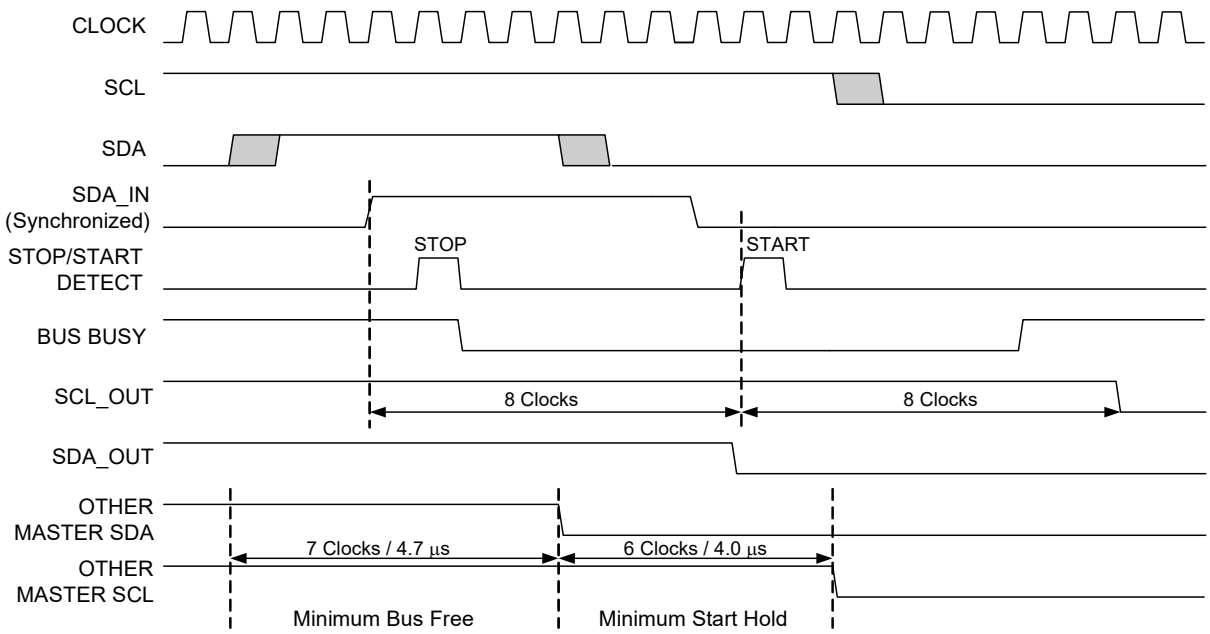

Figure 24-11. Master Stop/Start Chaining

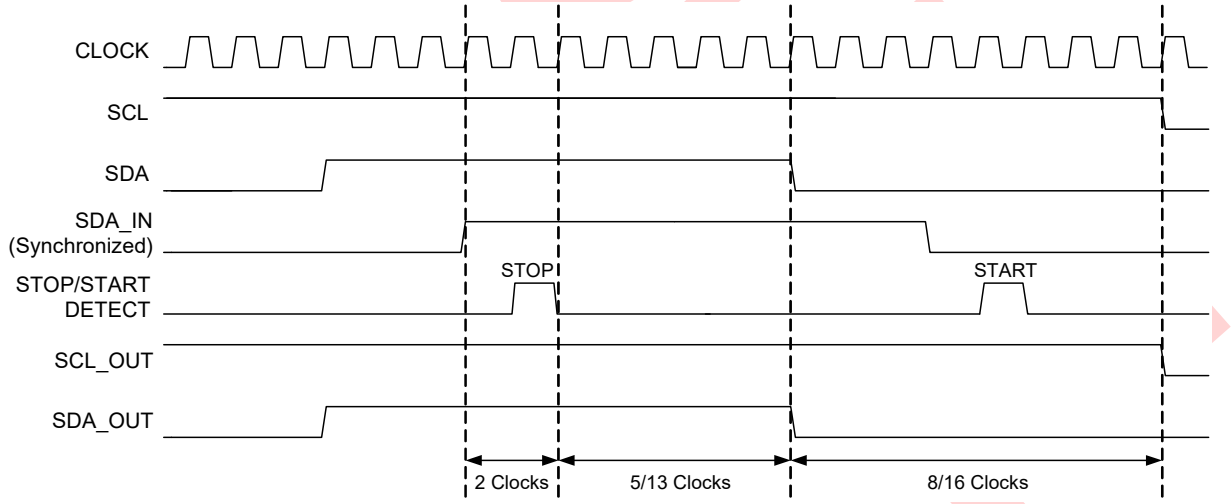

24.4.5 Master Restart Timing

Figure 24-12 shows the Master Restart timing. After the ACK/NACK bit, the clock is held low for a half bit time (8/16 clocks corresponding to the 16 or 32 times sampling rates), during which time the data is allowed to go high, then a valid start is generated in the following 3 half bit times as shown.

Figure 24-12. Master Restart Timing

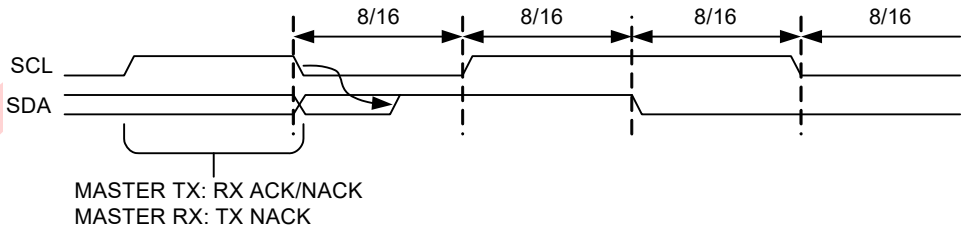

24.4.6 Master Stop Timing

Figure 24-13 shows basic Master Stop timing. In order to generate a Stop, the SDA line is first pulled low, in accordance with the basic SDA output timing. Then, after the full low of SCL is completed and the SCL line is pulled high, the SDA line remains low for a full one-half bit time before it is pulled high to signal the Stop.

Figure 24-13. Master Stop Timing

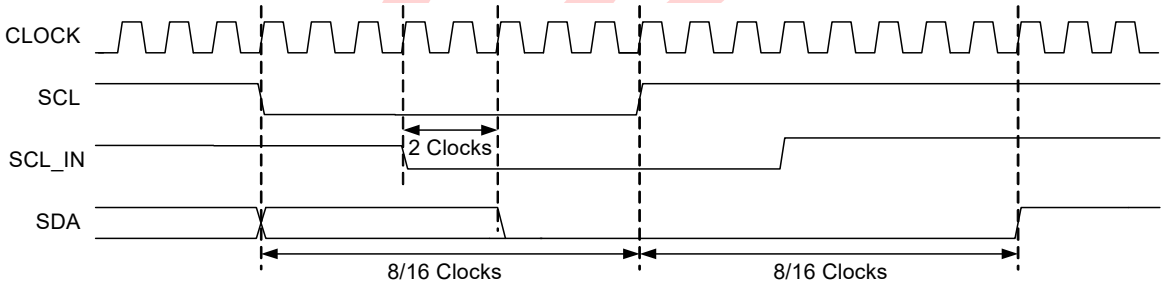

CYPRESS PERFORM

24.4.7 Master/Slave Stall Timing

When a Byte Complete interrupt occurs, the PowerPSoC device firmware must respond with a write to the I2C_SCR register to continue the transfer (or terminate the transfer). The interrupt occurs two clocks after the rising edge of SCL_IN (see "Status Timing" on page 248). As illustrated in Figure 24-14, firmware has until one clock after the falling edge of SCL_IN to write to the I2C_SCR register; otherwise, a stall occurs. Once stalled, the I/O write releases the stall. The setup time between data output and the next rising edge of SCL will always be N-1 clocks.

Figure 24-14. Master/Slave Stall Timing

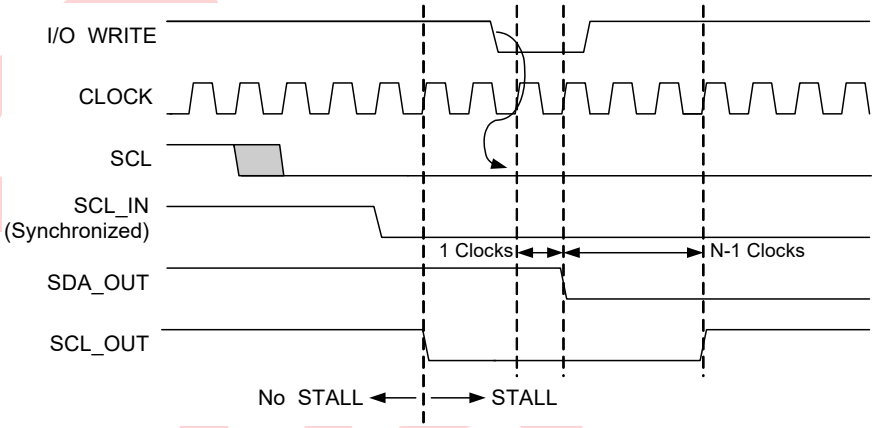

24.4.8 Master Lost Arbitration Timing

Figure 24-15 shows a Lost Arbitration sequence. When contention is detected at the input (SDA_IN) sampling point, the SDA output is immediately released to an IDLE state. However, the master continues clocking until the Byte Complete interrupt, which is processed in the usual way. Any write to the I2C_SCR register results in the master reverting to an IDLE state, one clock after the next positive edge of the SCL_IN clock.

Figure 24-15. Lost Arbitration Timing (Transmitting Address or Data)

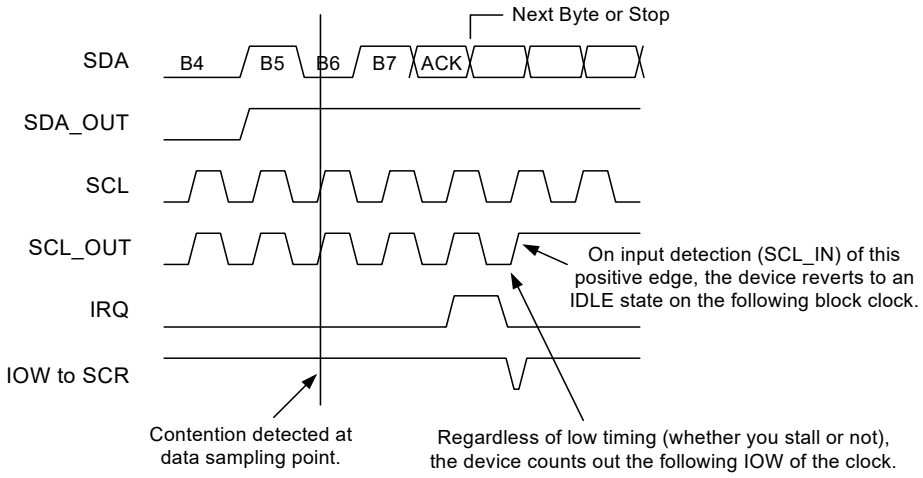

24.4.9 Master Clock Synchronization

Figure 24-16 shows the timing associated with Master Clock Synchronization. Clock synchronization is always operational, even if it is the only master on the bus. In which case, it is synchronizing to its own clock. In the wired AND bus, an SCL output of '0' is seen by all masters. When the hardware asserts a '0' to the output, it is immediately fed back from the PowerPSoC device pin to the input synchronizer for the SCL input. The counter value (depending on the sampling rate) takes into account the worst case latency for input synchronization of three clocks, giving a net period of 8/16 clocks for both high and low time. This results in an overall clocking rate of 16/32 clocks per bit.

In multi-master environments when the hardware outputs a '1' on the SCL output, if any other master is still asserting a '0', the clock counter will hold until the SCL input line matches the '1' on the SCL output line. When matched, the remainder of the high time is counted down. In this way, the master with the fastest frequency determines the high time of the clock and the master with the lowest frequency determines the low time of the clock.

Figure 24-16. Master Clock Synchronization

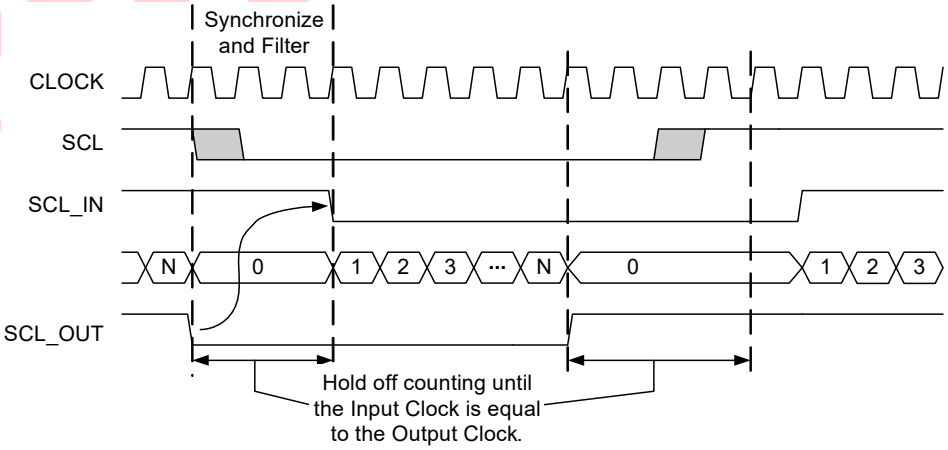

OBSOLETE

25. Internal Voltage Reference

This chapter discusses the Internal Voltage Reference and its associated register. The internal voltage reference provides an absolute value of 1.3V to a variety of subsystems in the PowerPSoC device. For a quick reference of all PowerPSoC registers in address order, refer to the Register Details chapter on page 361.

25.1 Architectural Description

The Internal Voltage Reference is made up of two blocks: a bandgap voltage generator and a buffer with sample and hold. The bandgap voltage generator is a typical (V_{BE} + K V_T) design.

The buffer circuit provides gain to the 1.20V bandgap voltage, to produce a 1.30V reference. A simplified ***schematic*** is illustrated in Figure 25-1. The connection between amplifier and capacitor is made through a CMOS switch, allowing the reference voltage to be used by the system while the reference circuit is powered down. The voltage reference is trimmed to 1.30V at room temperature.

A temperature proportional voltage is also produced in this block for use in temperature sensing.

Figure 25-1. Voltage Reference Schematic

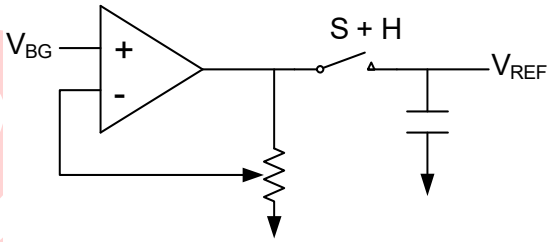

25.2 Register Definitions

The following register is associated with the Internal Voltage Reference. The Internal Voltage Reference is trimmed for gain and temperature coefficient using the BDG_TR register. The register description below has an associated register table showing the bit structure. The bits that are grayed out in the table are reserved bits and are not detailed in the register description that follows. Reserved bits should always be written with a value of '0'.

25.2.1 BDG_TR Register

Add.	Name	Bit 7	Bit 6	Bit 5	Bit 4	Bit 3	Bit 2	Bit 1	Bit 0	Access
1,EAh	BDG_TR			TC[1:0]		V[3:0]				RW : 00

The Bandgap Trim Register (BDG_TR) is used to adjust the bandgap and add an RC filter to AGND.

Bits 5 and 4: TC[1:0]. These bits are for setting the temperature coefficient inside the bandgap voltage generator. 10b is the design center for '0' TC.

It is strongly recommended that the user not alter the value of these bits.

Bits 3 to 0: V[3:0]. These bits are for setting the gain in the reference buffer. Sixteen steps of 4 mV are available. 1000b is the design center for 1.30V.

It is strongly recommended that the user not alter the value of these bits.

For additional information, refer to the BDG_TR register on page 513.

OBSOLETE

OBSOLETE

26. System Resets

This chapter discusses the System Resets and their associated registers. PowerPSoC devices support several types of resets. The various resets are designed to provide error-free operation during power up for any voltage ramping profile, to allow for user-supplied external reset and to provide recovery from errant code operation. For a complete table of the System Reset registers, refer to the "Summary Table of the System Resource Registers" on page 210. For a quick reference of all PowerPSoC registers in address order, refer to the Register Details chapter on page 361.

26.1 Architectural Description

When reset is initiated, all registers are restored to their default states. In the Register Details chapter on page 361, this is indicated by the POR column in the register tables and elsewhere it is indicated in the Access column, values on the right side of the colon, in the register tables. Minor exceptions are explained below.

The following types of resets can occur in the PowerPSoC device:

- Power on Reset (POR). This occurs at low supply voltage and is comprised of multiple sources.
- External Reset (XRES). This active high reset is driven into the PowerPSoC device, on devices that contain an XRES pin.
- Watchdog Reset (WDR). This optional reset occurs when the watchdog timer expires, before being cleared by user firmware. Watchdog reset defaults to off.
- Internal Reset (IRES). This occurs during the boot sequence, if the SROM code determines that Flash reads are not valid.

The occurrence of a reset is recorded in the Status and Control registers (CPU_SCR0 for POR, XRES, and WDR) or in the System Status and Control Register 1 (CPU_SCR1 for IRESS). Firmware can interrogate these registers to determine the cause of a reset.

26.2 Pin Behavior During Reset

Power on Reset and External Reset cause toggling on two GPIO pins, P1[0] and P1[1], as described below and illustrated in Figure 26-1 and Figure 26-2. This allows programmers to synchronize with the PowerPSoC device. All other GPIO pins are placed in a high impedance state during and immediately following reset.

26.2.1 GPIO Behavior on Power Up

At power up, the internal POR causes P1[0] to initially drive a strong high (1) while P1[1] drives a resistive low (0). After 256 sleep oscillator cycles (approximately 8 ms), the P1[0] signal transitions to a resistive low state. After additional 256 sleep oscillator clocks, both pins transition to a high impedance state and normal CPU operation begins. This is illustrated in Figure 26-1.

Figure 26-1. P1[1:0] Behavior on Power Up

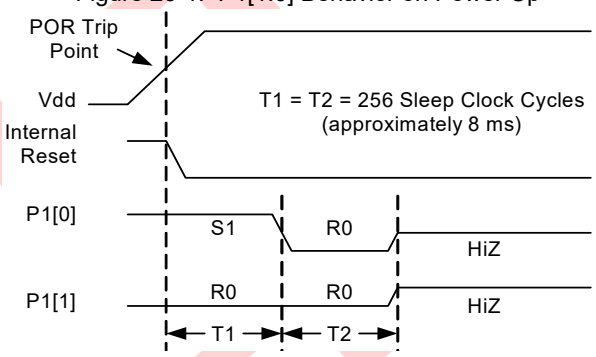

PRELIMINARY

26.2.2 GPIO Behavior on External Reset

During External Reset (XRES=1), both P1[0] and P1[1] drive resistive low (0). After XRES de-asserts, these pins continue to drive resistive low for another 8 sleep clock cycles (approximately 200 us). After this time, both pins transition to a high impedance state and normal CPU operation begins. This is illustrated in Figure 26-2.

Figure 26-2. P1[1:0] Behavior on External Reset (XRES)

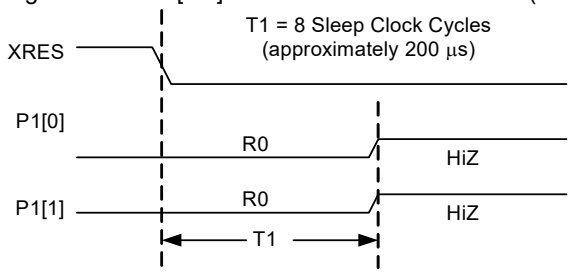

26.3 Register Definitions

The following registers are associated with the PowerPSoC System Resets and are listed in address order. Each register description has an associated register table showing the bit structure for that register. The bits in the tables that are grayed out are reserved bits and are not detailed in the register descriptions that follow. Reserved bits should always be written with a value of '0'. For a complete table of system reset registers, refer to the "Summary Table of the System Resource Registers" on page 210.

26.3.1 CPU_SCR1 Register

Address	Name	Bit 7	Bit 6	Bit 5	Bit 4	Bit 3	Bit 2	Bit 1	Bit 0	Access
x,FEh	CPU_SCR1	IRESS							IRAMDIS	# : 0

LEGEND
x An "x" before the comma in the address field indicates that this register can be read or written to no matter what bank is used.
Access is bit specific. Refer to the Register Details chapter on page 361 for additional information.

The System Status and Control Register 1 (CPU_SCR1) is used to convey the status and control of events related to internal resets and watchdog reset.

Bit 7: IRESS. The Internal Reset Status bit is a read only bit that may be used to determine if the booting process occurred more than once.

When this bit is set, it indicates that the SROM SWBoot-Reset code was executed more than once. If this bit is not set, the SWBootReset was executed only once. In either case, the SWBootReset code will not allow execution from code stored in Flash until the M8C Core is in a safe operating mode with respect to supply voltage and Flash operation. There is no need for concern when this bit is set. It is provided for systems which may be sensitive to boot time, so that they can determine if the normal one-pass boot time was exceeded. For more information on the SWBootReest code see the Supervisory ROM (SROM) chapter on page 53.

Bit 0: IRAMDIS. The Initialize RAM Disable bit is a control bit that is readable and writeable. The ***default value*** for this bit is '0', which indicates that the maximum amount of SRAM should be initialized on watchdog reset to a value of 00h. When the bit is '1', the minimum amount of SRAM is initialized after a watchdog reset. For more information on this bit, see the "SROM Function Descriptions" on page 54.

For additional information, refer to the CPU_SCR1 register on page 466.

OBSOLETE

26.3.2 CPU_SCR0 Register

Address	Name	Bit 7	Bit 6	Bit 5	Bit 4	Bit 3	Bit 2	Bit 1	Bit 0	Access
x,FFh	CPU_SCR0	GIES		WDRS	PORS	Sleep			STOP	# : XX

LEGEND
Access is bit specific. Refer to register detail for additional information.
XX The reset value is 10h after POR/XRES and 20h after a watchdog reset.

The System Status and Control Register 0 (CPU_SCR0) is used to convey the status and control of events for various functions of a PowerPSoC device.

Bit 7: GIES. The Global Interrupt Enable Status bit is a read only status bit and its use is discouraged. The GIES bit is a legacy bit which was used to provide the ability to read the GIE bit of the CPU_F register. However, the CPU_F register is now readable. When this bit is set, it indicates that the GIE bit in the CPU_F register is also set which, in turn, indicates that the microprocessor will service interrupts.

Bit 5: WDRS. The WatchDog Reset Status bit may not be set. It is normally '0' and automatically set whenever a watchdog reset occurs. The bit is readable and clearable by writing a zero to its bit position in the CPU_SCR0 register.

Bit 4: PORS. The Power On Reset Status (PORS) bit, which is the watchdog enable bit, is set automatically by a POR or External Reset (XRES). If the bit is cleared by user code, the watchdog timer is enabled. Once cleared, the only way to reset the PORS bit is to go through a POR or XRES. Thus, there is no way to disable the watchdog timer, other than to go through a POR or XRES.

Bit 3: Sleep. The Sleep bit is used to enter Low Power Sleep mode when set. To wake up the system, this register bit is cleared asynchronously by any enabled interrupt. There are two special features of this register bit that ensures proper Sleep operation. First, the write to set the register bit is blocked, if an interrupt is about to be taken on that instruction boundary (immediately after the write). Second, there is a hardware interlock to ensure that, once set, the sleep bit may not be cleared by an incoming interrupt until the sleep circuit has finished performing the sleep sequence and the system-wide power down signal has been asserted. This prevents the sleep circuit from being interrupted in the middle of the process of system power down, possibly leaving the system in an indeterminate state.

Bit 0: STOP. The STOP bit is readable and writeable. When set, the PSoC M8C will stop executing code until a reset event occurs. This can be either a POR, WDR, or XRES. If an application wants to stop code execution until a reset, the preferred method would be to use the HALT instruction rather than a register write to this bit.

For additional information, refer to the CPU_SCR0 register on page 467.

OBSOLETE

26.4 Timing Diagrams

26.4.1 Power On Reset

A Power on Reset (POR) is triggered whenever the supply voltage is below the POR trip point. POR ends once the supply voltage rises above this voltage. Refer to the POR and LVD chapter on page 263 for more information on the operation of the POR block.

POR consists of two pieces: an imprecise POR (IPOR) and a Precision POR (PPOR). “POR” refers to the OR of these two functions. IPOR has coarser accuracy and its trip point is typically lower than PPOR’s trip point. PPOR is derived from a circuit that is calibrated (during boot), for a very accurate location of the POR trip point.

During POR (POR=1), the IMO is powered off for low power during start-up. Once POR de-asserts, the IMO is started (see Figure 26-4).

POR configures register reset status bits as shown in Table 26-1. PPOR does not affect the Bandgap Trim register (BDG_TR), but IPOR does reset this register.

26.4.2 External Reset

An External Reset (XRES) is caused by pulling the XRES pin high. The XRES pin has an always-on, pull down resistor, so it does not require an external pull down for operation and can be tied directly to ground or left open. Behavior after XRES is similar to POR.

During XRES (XRES=1), the IMO is powered off for low power during start-up. Once XRES de-asserts, the IMO is started (see Figure 26-4). How the XRES configures register reset status bits is shown in Table 26-1.

26.4.3 Watchdog Timer Reset

The user has the option to enable the Watchdog Timer Reset (WDR), by clearing the PORS bit in the CPU_SCR0 register. Once the PORS bit is cleared, the watchdog timer cannot be disabled. The only exception to this is if a POR/XRES event takes place, which will disable the WDR. Note that a WDR does not clear the Watchdog timer. See “Watchdog Timer” on page 102 for details of the Watchdog operation.

When the watchdog timer expires, a watchdog event occurs resulting in the reset sequence. Some characteristics unique to the WDR are as follows.

- PowerPSoC device reset asserts for one cycle of the CLK32K clock (at its reset state).
- The IMO is not halted during or after WDR (that is, the part does not go through a low power phase).
- CPU operation re-starts one CLK32K cycle after the internal reset de-asserts (see Figure 26-3).

How the WDR configures register reset status bits is shown in Table 26-1.

Figure 26-3. Key Signals During WDR

WDR: Reset 1 cycle, then one additional cycle before the CPU reset is released.

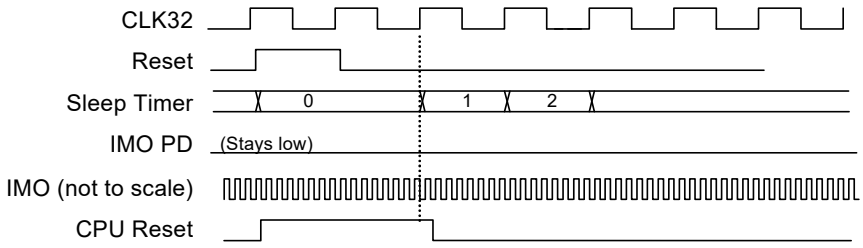

OBSOLETE

Figure 26-4. Key Signals During POR and XRES

POR (IPOR followed by PPOR): Reset while POR is high (IMO off), then 511(+) cycles (IMO on), and then the CPU reset is released. **XRES** is the same, with N=8.

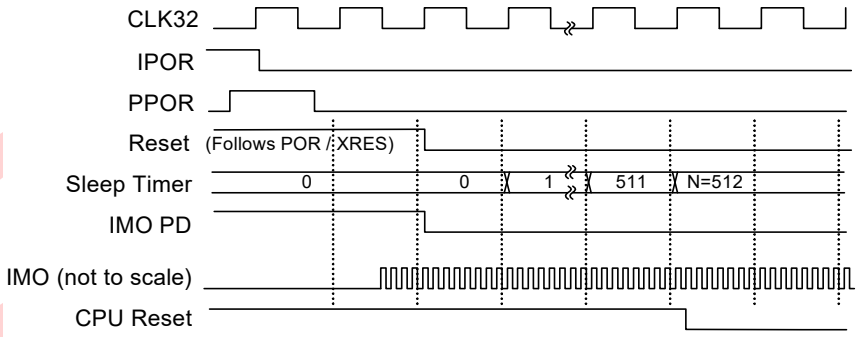

PPOR (with no IPOR): Reset while PPOR is high and to the end of the next 32K cycle (IMO off); 1 cycle IMO on before the CPU reset is released. Note that at the 5V level, PPOR will tend to be brief, because the reset clears the POR range register (VLT_CR) back to the default 3V setting.

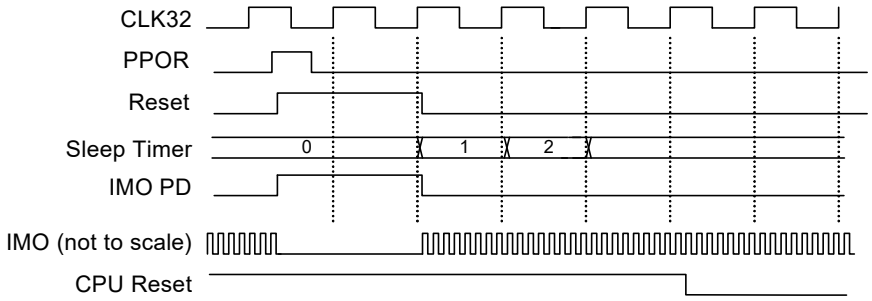

XRES: Reset while XRES is high (IMO off), then 7(+) cycles (IMO on), and then the CPU reset is released.

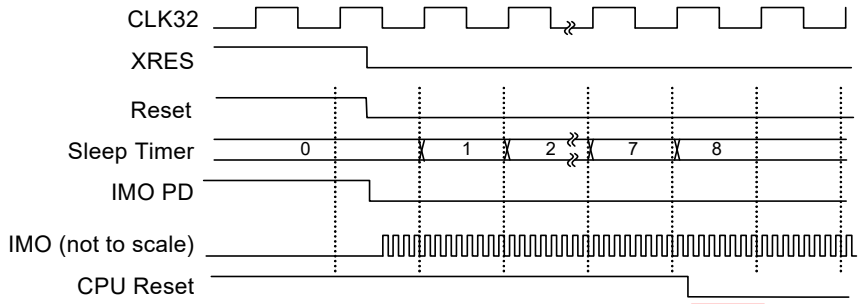

26.4.4 Reset Details

Timing and functionality details are summarized in Table 26-1. Figure 26-4 shows some of the relevant signals for IPOR, PPOR, and XRES, while Figure 26-3 shows signaling for WDR and IRES.

Table 26-1. Details of Functionality for Various Resets

Item	IPOR (Part of POR)	PPOR (Part of POR)	XRES	WDR
Reset Length	While POR=1	While PPOR=1, plus 30-60 µs (1-2 clocks)	While XRES=1	30 µs (1 clock)
Low Power (IMO Off) During Reset?	Yes	Yes	Yes	No
Low Power Wait Following Reset?	No	No	No	No
CLK32K Cycles from End of Reset to CPU Reset De-asserts[a]	512	1	8	1
Register Reset (See next line for CPU_SCR0, CPU_SCR1)	All	All, except PPOR does not reset Bandgap Trim register	All	All
Reset Status Bits in CPU_SCR0, CPU_SCR1	Set PORS, Clear WDRS, Clear IRAMDIS	Set PORS, Clear WDRS, Clear IRAMDIS	Set PORS, Clear WDRS, Clear IRAMDIS	Clear PORS, Set WDRS, IRAMDIS unchanged
Bandgap Power	On	On	On	On
Boot Time[b]	2.2 ms	2.2 ms	2.2 ms	2.2 ms

a. CPU reset is released after synchronization with the CPU Clock.
b. Measured from CPU reset release to execution of the code at Flash address 0x0000.

26.5 Power Consumption

The ILO block drives the CLK32K clock used to time most events during the reset sequence. This clock is powered down by IPOR, but not by any other reset. The sleep timer provides interval timing.

While POR or XRES assert, the IMO is powered off to reduce start-up power consumption.

During and following IRES (for 64 ms nominally), the IMO is powered off for low average power during slow supply ramps.

During and after POR or XRES, the bandgap circuit is powered up.

The IMO is always on for at least one CLK32K cycle, before CPU reset is de-asserted.

OBSOLETE

27. POR and LVD

OBSOLETE

This chapter briefly discusses the POR and LVD circuits and their associated registers. For a complete table of the POR and LVD registers, refer to the "Summary Table of the System Resource Registers" on page 210. For a quick reference of all PowerPSoC registers in address order, refer to the Register Details chapter on page 361.

27.1 Architectural Description

The Power on Reset (POR) and Low Voltage Detect (LVD) circuits provide protection against low voltage conditions. The POR function senses Vdd and holds the system in reset until the magnitude of Vdd will support operation to specification. The LVD function senses Vdd and provides an interrupt to the system when Vdd falls below a selected ***threshold***. Other outputs and status bits are provided to indicate important voltage trip levels.

Refer to Section 26.2 Pin Behavior During Reset for a description of GPIO pin behavior during power up.

27.2 Register Definitions

The following registers are associated with the POR and LVD, and are listed in address order. The register descriptions below have an associated register table showing the bit structure. Depending on how many analog columns your PowerPSoC device has (see the Cols. column in the register tables below), only certain bits are accessible to be read or written.

The bits that are grayed out in the register tables are reserved bits and are not detailed in the register descriptions that follow. Reserved bits should always be written with a value of '0'. For a complete table of the POR and LVD registers, refer to the "Summary Table of the System Resource Registers" on page 210.

27.2.1 VLT_CR Register

Add.	Name	Bit 7	Bit 6	Bit 5	Bit 4	Bit 3	Bit 2	Bit 1	Bit 0	Access
1,E3h	VLT_CR			PORLEV[1:0]		LVDTBEN	VM[2:0]			RW : 00

The Voltage Monitor Control Register (VLT_CR) is used to set the trip points for POR, LVD, and the supply pump.

The VLT_CR register is cleared by all resets, which can cause reset cycling during very slow supply ramps to 5V when the POR range is set for the 5V range. This is because the reset clears the POR range setting back to 3V and a new boot/start-up occurs (possibly many times). The user can manage this with Sleep mode and/or reading voltage status bits, if such cycling is an issue.

Bits 5 and 4: PORLEV[1:0]. These bits set the Vdd level at which PPOR switches to one of three valid values. Note that 11b is a reserved value and therefore should not be used.

The valid setting for these bits is:

- 10b (4.75V operation)

See the "DC POR and LVD Specifications" table in the Electrical Specifications section of the PowerPSoC device data sheet for voltage tolerances for each setting.

Bit 3: LVDTBEN. This bit is ANDed with LVD to produce a throttle-back signal that reduces CPU clock speed when low voltage conditions are detected. When the Throttle-Back signal is asserted, the CPU speed bits in the OSC_CR0 register are reset, forcing the CPU speed to 3 MHz or EXTCLK / 8.

Bits 2 to 0: VM[2:0]. These bits set the Vdd level at which the LVD comparator switches.

See the "DC POR and LVD Specifications" table in the Electrical Specifications section of the PowerPSoC device data sheet for voltage tolerances for each setting.

For additional information, refer to the VLT_CR register on page 508.

27.2.2 VLT_CMP Register

Add.	Name	Bit 7	Bit 6	Bit 5	Bit 4	Bit 3	Bit 2	Bit 1	Bit 0	Access
1,E4h	VLT_CMP							LVD	PPOR	R : 00

The Voltage Monitor Comparators Register (VLT_CMP) is used to read the state of internal supply voltage monitors.

Bit 1: LVD. This bit reads the state of the low voltage detect comparator. The trip points for both LVD and PUMP are set by VM[2:0] in the VLT_CR register. Refer to the table titled "System Resources for PowerPSoC Devices" on page 209 to determine if your PowerPSoC device can use this bit.

Bit 0: PPOR. This bit reads back the state of the PPOR output. This can only be meaningfully read with PORLEV[1:0] set to disable PPOR. In that case, the PPOR status bit shows the comparator state directly.

For additional information, refer to the VLT_CMP register on page 509.

OBSOLETE

28. I/O Analog Multiplexer

This chapter explains the I/O Analog Multiplexer for the CY8CLED0xx0x PowerPSoC family of devices and its associated registers. For a complete table of the I/O Analog Multiplexer registers, refer to the "Summary Table of the System Resource Registers" on page 210. For a quick reference of all PowerPSoC registers in address order, refer to the Register Details chapter on page 361.

28.1 Architectural Description

The PowerPSoC devices contain an enhanced analog multiplexer (mux) capability. This function allows many I/O pins to connect to a common internal analog bus. In this device, all the GPIO pins connect to the mux bus except the FN0 pins.

Any number of pins can be connected simultaneously, and dedicated support circuitry allows selected pins to be alternately charged high or connected to the bus. The analog bus can be connected as an input into either the positive or negative inputs of any analog continuous time (CT) block. A block diagram is shown in Figure 28-1.

Figure 28-1. Analog Mux System

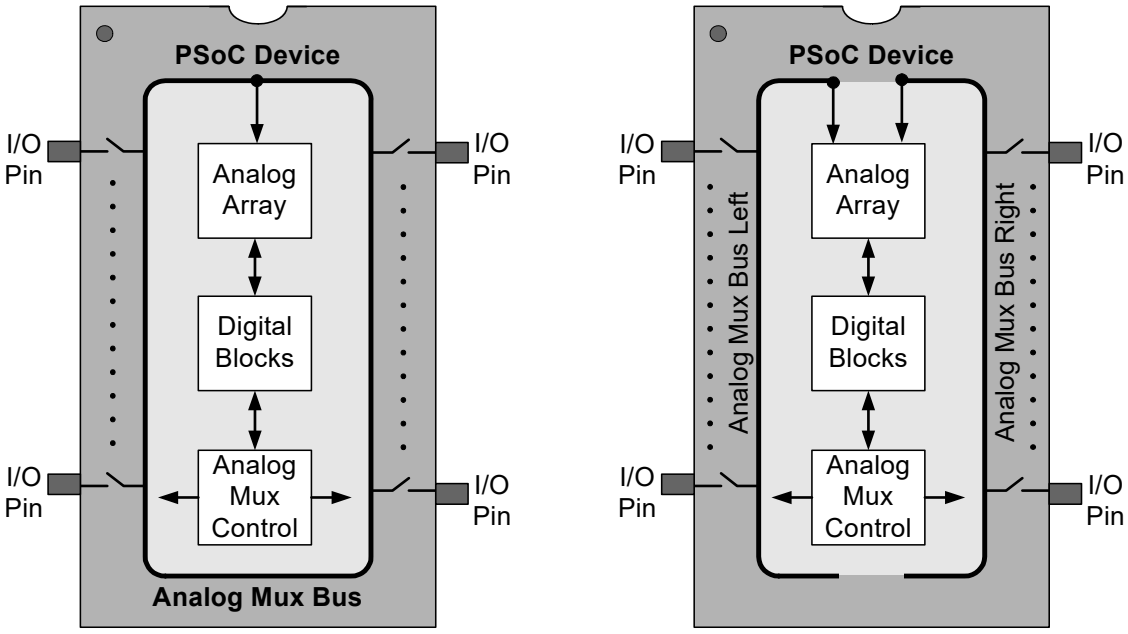

CY8CLED0xDxx Configuration

Alternate Configuration for the CY8CLED0xDxx

In this device, the Analog Mux Bus can be split into two separate nets, as shown in Figure 28-1. The two analog mux nets can be connected to different analog columns for simultaneous signal processing.

For each pin, the mux capability exists in parallel with the normal GPIO cell described in the General Purpose I/O (GPIO) chapter on page 79 and shown in Figure 28-2. Normally, the associated GPIO pin is put into a high-impedance state for these applications, although there are cases where the GPIO cell is configured by the user to briefly drive pin initialization states as described below.

Pins are individually connected to the internal bus by setting the corresponding bits in the MUX_CRx registers. Any number of pins can be enabled at the same time. At reset, all of these mux connections are open (disconnected).

Figure 28-2. I/O Pin Configuration

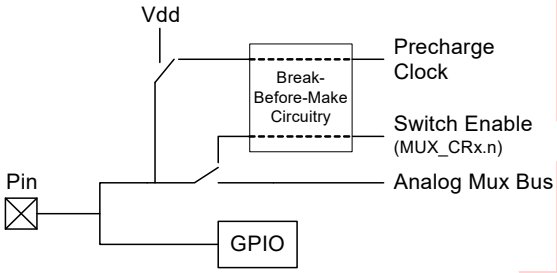

28.2 PowerPSoC Device Distinctions

In this device, the mux bus is split into two sections. All GPIO pins (except FN0) are enabled for this connection.

28.3 Application Description

The analog mux circuitry enables a variety of unique applications such as those explained in the sections below.

28.3.1 Capacitive Sensing

The analog mux supports capacitive sensing applications through the use of the I/O analog multiplexer and its control circuitry. Two off-chip capacitors are normally connected to the analog mux bus. One is the sense capacitor being measured and the other is an integration capacitor that accumulates charge from the sense capacitor. The integration capacitor is initialized (low) under firmware control, using its pin's GPIO cell. After that, the capacitor is charged through charge-sharing with the sense capacitor.

The sense capacitor can be automatically initialized and sensed for a number of cycles, in order to build up sufficient charge on the integration capacitor. Several clocking choices are available for selection in the AMUX_CFG register. The ***break-before-make*** circuitry is contained in each pin's mux so that each cycle's initialization of the sense capacitor does not disturb the internal bus. The sense capacitor is charged to Vdd and then released and re-connected to the analog mux for charge transfer to the integration capacitor.

Charge accumulation on the integration capacitor continues for a time set by the user. The integration capacitor voltage, seen on the analog mux bus, is typically compared against a reference such as the bandgap. Detecting a capacitance change is often more important than an absolute measurement, and a change in the charging time can indicate such a difference. A system with several sense capacitors can be measured in sequence, using the same integration capacitor.

A pin used as the integration capacitor is not switched during this process, so it remains connected to the analog mux. Two Port 0 pins are available for this function.

In order to activate the charge transfer mode, the precharge clock must be set to any state except the reset state. In the reset state, the mux connections are static, controlled only by the MUX_CRx register settings.

CONFIDENTIAL

28.3.2 Analog Input

The analog bus forms a multiplexer across many I/O pins. This allows any of these pins to be brought into the analog system for processing, as shown in Figure 28-1. The Port 0 pins are also brought through separate mux paths to the continuous time block, so Port 0 inputs can be routed to the analog system by either path. In this device, some Port 2 inputs have a dedicated path to switched capacitor blocks.

In this device, odd pins are connected to one bus, even pins to the other bus. The two mux buses can be shorted together using the switch controlled by the SplitMux bit.

28.3.3 Crosspoint Switch

The bidirectional nature of the analog mux switches allows a direct connection between any of the I/O pins, as shown in Figure 28-1. Enabling two (or more) pins at the same time connects these pins together, with approximately 400 ohms of resistance between each pin and the analog mux bus. As long as the clock choice in the AMUX_CFG register is set to the fixed '0' case, the switches will be static, controlled only by the state of the individual switch enable bits in the MUX_CRx registers. The crosspoint can be reconfigured at any time and the user can provide a break-before-make function with firmware if needed.

28.3.4 Charging Current

The analog mux bus can be connected to the dedicated charging current. This enables applications such as capacitor measurement with this current instead of charge sharing. The DAC_D and DAC_CR registers control this configurable current. If this device is configured with a split analog mux bus, this current connects only to the right-side bus (even pin numbers).

OBSOLETE

28.4 Register Definitions

The following registers are associated with the Analog Bus Mux PowerPSoC devices and are listed in address order within their system resource configuration. Each register description has an associated register table showing the bit structure for that register. Register bits that are grayed out throughout this document are reserved bits and are not detailed in the register descriptions that follow. Reserved bits should always be written with a value of '0'.

28.4.1 AMUX_CFG Register

Address	Name	Bit 7	Bit 6	Bit 5	Bit 4	Bit 3	Bit 2	Bit 1	Bit 0	Access
0,61h	AMUX_CFG	BCol1Mux	ACol0Mux	INTCAP[1:0]		MUXCLK[2:0]			EN	RW : 00

The Analog Mux Configuration Register (AMUX_CFG) is used to configure the clocked pre-charge mode of the analog multiplexer system.

Bit 7: BCol1Mux. This bit selects the column 1 port input. It picks between port 0 inputs or the analog mux bus.

Bit 6: ACol0Mux. This bit selects the column 0 port input. It picks between port 0 inputs or the analog mux bus.

Bits 5 and 4: INTCAP[1:0]. These bits are used to choose static connections to the analog mux bus even if the mux clocking is enabled in the MUXCLK[2:0] setting.

Bits 3 to 1: MUXCLK[2:0]. These bits select the precharge clock that drives the switching on the analog mux. The default choice is to have no clocking and no precharge.

Bit 0: EN. This bit enables the clock output. When the block is disabled, the output is '0'.

For additional information, refer to the AMUX_CFG register on page 389.

28.4.2 DAC_D Register

Address	Name	Bit 7	Bit 6	Bit 5	Bit 4	Bit 3	Bit 2	Bit 1	Bit 0	Access
0,FDh	DAC_D	DACDATA[7:0]								RW : 00

The Analog Mux DAC Data Register (DAC_D) specifies the 8-bit multiplying factor that determines the output DAC current.

Bits 7 to 0: DACDATA[7:0]. The 8-bit value in this register sets the current driven onto the analog mux bus when the current DAC mode is enabled.

For additional information, refer to the DAC_D register on page 465.

OBSOLETE

28.4.3 AMUX_CLK Register

Address	Name	Bit 7	Bit 6	Bit 5	Bit 4	Bit 3	Bit 2	Bit 1	Bit 0	Access
1,AFh	AMUX_CLK							CLKSYNC[1:0]		RW : 00

The Analog Mux Clock Register (AMUX_CLK) is used to adjust the phase of the clock to the analog mux bus.

Bits 1 and 0: CLKSYNC[1:0]. These bits select the synchronization clock for the analog mux precharge clock.

For additional information, refer to the AMUX_CLK register on page 492.

28.4.4 MUX_CRx Registers

Address	Name	Bit 7	Bit 6	Bit 5	Bit 4	Bit 3	Bit 2	Bit 1	Bit 0	Access
1,D8h	MUX_CR0	ENABLE[7:0]								RW : 00
1,D9h	MUX_CR1	ENABLE[7:0]								RW : 00
1,DAh	MUX_CR2	ENABLE[7:0]								RW : 00

The Analog Mux Port Bit Enables Registers (MUX_CRx) are used to control the connection between the analog mux bus and the corresponding pin.

Bits 7 to 0: ENABLE[7:0]. The bits in these registers enable connection of individual pins to the analog mux bus. Each I/O port has a corresponding MUX_CRx register.

For additional information, refer to the MUX_CRx register on page 500.

28.4.5 DAC_CR Register

Address	Name	Bit 7	Bit 6	Bit 5	Bit 4	Bit 3	Bit 2	Bit 1	Bit 0	Access
1,FDh	DAC_CR	SplitMux	MuxClkGE			IRANGE	OSCMODE[1:0]		ENABLE	RW : 00

The Analog Mux DAC Control Register (DAC_CR) contains the control bits for the DAC current that drives the analog mux bus and for selecting the split configuration.

Bit 7: SplitMux. This bit allows the analog mux bus to be configured as two separate nets.

Bit 6: MuxClkGE. This bit controls connection of the analog mux bus clock signal to a global.

Bit 3: IRANGE. This bit selects the two current ranges that are available for the DAC.

Bits 2 and 1: OSCMODE[1:0]. These bits, when set, enable the analog mux bus to reset to Vss whenever the comparator trip point is reached.

Bit 0: ENABLE. This bit controls whether or not the DAC mode is enabled.

For additional information, refer to the DAC_CR register on page 514.

OBSOLETE

OBSOLETE

Section F: Power Peripherals

The Power Peripherals section discusses the power components of the PowerPSoC family of devices and the registers associated with those components. This section encompasses the following chapters:

- Current Sense Amplifier on page 283
- Digital-to-Analog Converter on page 287
- Comparator on page 295
- Analog MUX on page 301
- Digital MUX on page 305
- Hysteretic Controller on page 313
- Digital Modulator on page 321
- Gate Driver on page 345
- Power FET on page 351
- Switching Regulator on page 353

Power Peripherals Block Diagram

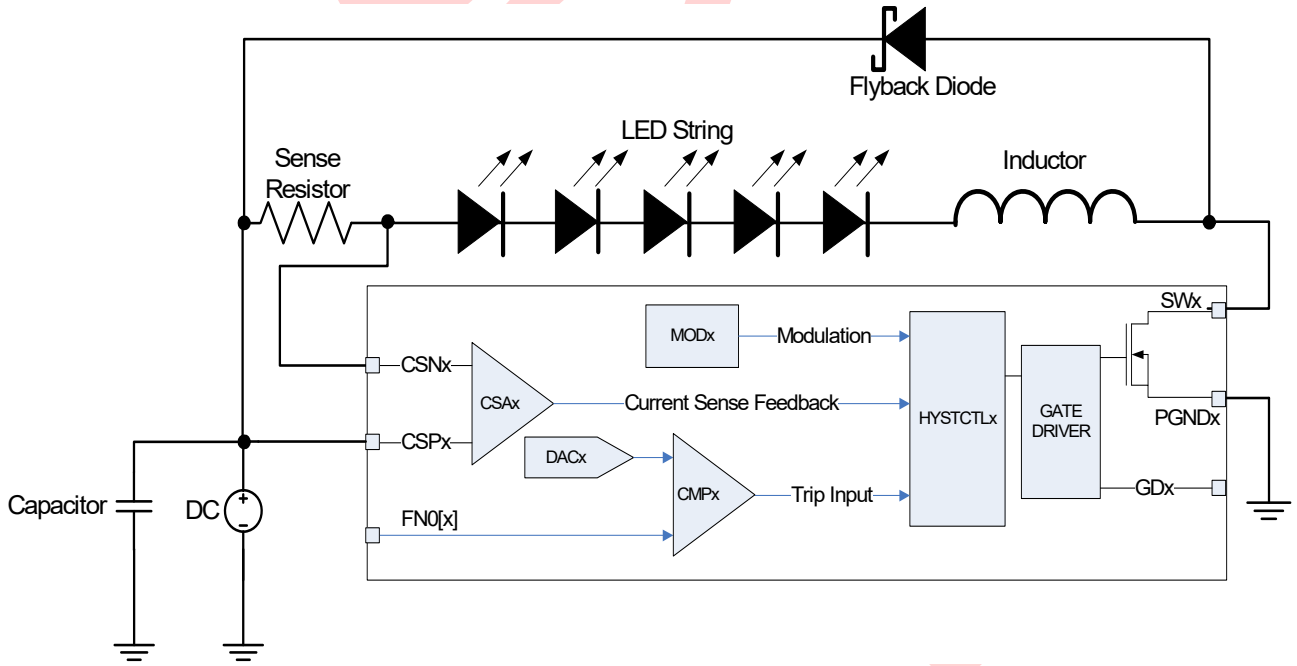

The diagram illustrates a typical implementation of an LED based lighting application using PowerPSoC. The peripherals of a single channel and their interaction in completing the system is shown inside the box. The PowerPSoC device family has up to four such channels.

The above block diagram appears at the beginning in each of the chapters of this section to effectively highlight the role and position of the peripheral on which the particular chapter describes.

Power Peripherals

The PowerPSoC family of intelligent power controller ICs are used in lighting applications that need traditional MCUs and discrete power electronics support. The power peripherals of the CY8CLED0xx0x include up to four 32V power MOSFETs with current ratings up to 1A each. It also integrates gate drivers that enable applications to drive external MOSFETs for higher current and voltage capabilities. The controller is a programmable threshold hysteretic controller, with user-selectable feedback paths that uses the IC in current mode floating load buck, boost, and floating load buck/boost configurations.

Hysteretic Controllers

The hysteretic controllers provide cycle by cycle switch control with fast transient response which simplifies system design by requiring no external compensation. The hysteretic controllers include the following key features:

- Up to four independent channels
- DAC configurable thresholds
- Wide switching frequency range from 20 kHz to 2 MHz
- Programmable minimum on/off timer
- Floating Load Buck, Boost, and/or Floating Load Buck-boost topology controller

The PowerPSoC contains up to four hysteretic controllers. There is one hysteretic controller for each channel of the device. The reference inputs of the hysteretic controller are provided by the reference DACs.

The hysteretic control function output is generated by comparing the feedback value to two thresholds. Going below the lower threshold turns the switch ON and exceeding the upper threshold turns the switch off as shown in Generating Hysteretic Control Function Output The output current waveforms are shown in Current Waveforms.

Generating Hysteretic Control Function Output

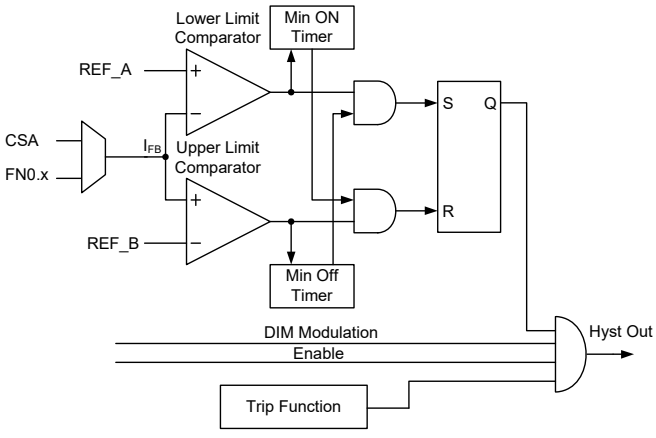

Current Waveforms

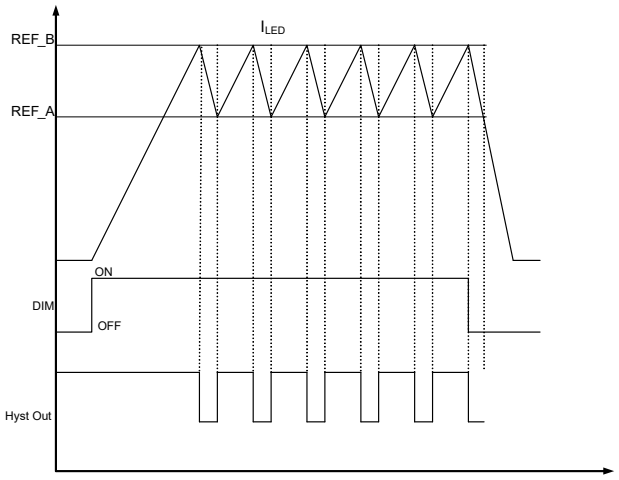

The minimum on-time and off-time circuits in the PowerPSoC prevent oscillations at very high frequencies, which can be very destructive to output switches.

Low Side N-Channel FETs

The internal low side N-Channel FETs are designed to enhance system integration. The low side N-Channel FETs include the following key features:

- Drive capability up to 1A
- Transition time down to 20 ns (rise/fall times) to ensure high efficiency (>90% at full load)
- Drain source voltage rating 32V
- Low $R_{DS(ON)}$ to ensure high efficiency
- Maximum switching frequency up to 2 MHz

External Gate Drivers

These gate drivers enable the use of external FETs with higher current capabilities or lower $R_{DS(ON)}$. The external gate drivers directly drive MOSFETS that are used in switching applications. The gate driver provides multiple programmable drive strength steps to enable improved EMI management. The external gate drivers include the following key features:

- Programmable drive strength options (25%, 50%, 75%, 100%) for EMI management
- Rise/fall times at 55 ns with 20 nC load

OBSOLETE

Dimming Modulation Schemes

There are three dimming modulation schemes available with the PowerPSoC. The configurable modulation schemes are:

- Precision Illumination Signal Modulation (PrISM™)
- Delta Sigma Modulation Mode (DMM)
- Pulse Width Modulation (PWM)

PrISM Mode Configuration

- High resolution operation up to 16 bits
- Dedicated PrISM module enables customers to use core PSoC digital blocks for other needs
- Clocking up to 48 MHz
- Selectable output signal density
- Reduced EMI

The PrISM mode compares the output of a pseudo-random counter with a signal density value. The comparator output asserts when the count value is less than or equal to the value in the signal density register.

DMM Mode Configuration

- High resolution operation up to 16 bits
- Configurable output frequency and delta sigma modulator width to trade off repeat rates versus resolution
- Dedicated DMM module enables customers to use PSoC digital blocks for other uses
- Clocking up to 48 MHz

The DMM modulator consists of a 12-bit PWM block and a 4-bit DSM (Delta Sigma Modulator) block. The width of the PWM, the width of the DMM, and the clock defines the output frequency. The duty cycle of the PWM output is dithered by using the DSM block which has a user selectable resolution up to 4 bits.

PWM Mode Configuration

- High resolution operation up to 16 bits
- User programmable period from 1 to 65535 clocks
- Dedicated PWM module enables customers to use core PSoC digital blocks for other uses
- Interrupt on rising edge of the output or terminal count
- Precise PWM phase control to manage system current edges
- Phase synchronization among the four channels
- PWM output can be aligned to left, right, or center

The PWM features a down counter and a pulse width register. A comparator output is asserted when the count value is less than or equal to the value in the pulse width register.

Current Sense Amplifier

Four high side current sense amplifiers provide a differential sense capability to sense the voltage across current sense resistors in lighting systems. The current sense amplifier includes the following key features:

- Operation with high common mode voltage to 32V
- High common mode rejection ratio
- Programmable bandwidth to optimize system noise immunity

An off-chip resistor R_{sense} is used for high side current measurement as shown in High Side Current Measurement. The output of the current sense amplifier goes to the Power Peripherals Analog Multiplexer where the user selects which hysteretic controller to route to. Rsense Values for Different Currents illustrates example values of R_{sense} for different currents.

R_{sense} Values for Different Currents

Maximum Load Current (mA)	Typical R_{sense} (mΩ)
1000	100
750	130
500	200
350	300

High Side Current Measurement

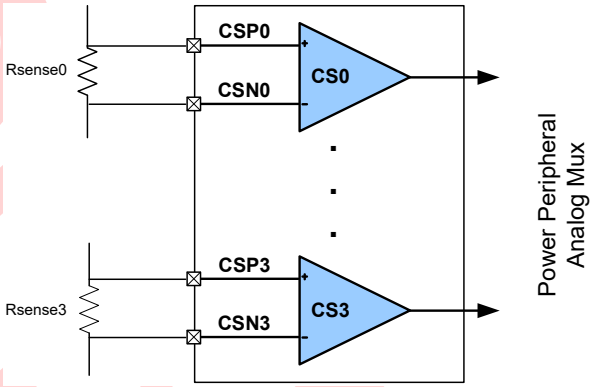

Voltage Comparators

There are six comparators that provide high speed comparator operation for over voltage, over current, and various other system event detections. For example, the comparators may be used for zero crossing detection for an AC input line or monitoring total DC bus current. Programmable internal analog routing allows these comparators to monitor various analog signals. These comparators include the following key features:

- High speed comparator operation: 100 ns response time
- Programmable interrupt generation
- Low input offset voltage and input bias currents

Six precision voltage comparators are available. The differential positive and negative inputs of the comparators are routed from the analog multiplexer to digital multiplexer. A programmable inverter is used to select the output polarity. User selectable hysteresis can be enabled or disabled to trade-off noise immunity versus comparator sensitivity.

PRELIMINARY

Reference DACs

The reference DACs are used to generate set points for various analog modules such as PWM controllers and comparators. The Reference DACs include the following key features:

- 8-bit resolution
- Guaranteed monotonic operation
- Low gain errors
- 10 µs settling time

These DACs are available to provide programmable references for the various analog and comparator functions and are controlled by memory mapped registers.

DAC[0:7] are embedded in the hysteretic controllers and are required to set the upper and lower thresholds for channel 0 to 3.

DAC [8:13] are connected to the Power Peripherals Analog Multiplexer and provide programmable references to the comparator bank. These are used to set trip points which enable over voltage, over current, and other system event detection.

Built-In Switching Regulator

The switching regulator is used to power the low voltage (5V portion of the device) from the input line. This regulator is based upon a peak current control loop which can support up to 250 mA of output current. The current not being consumed by PowerPSoC is used to power additional system peripherals. The key features of the built-in switching regulator include:

- Ability to self power device from input line
- Small filter component sizes
- Fast response to transients

Built-In Switching Regulator

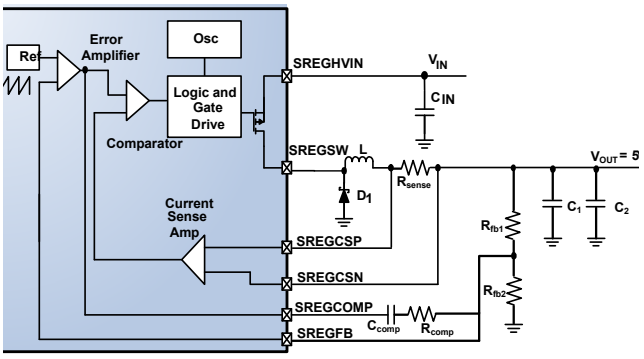

Analog Multiplexer

The analog multiplexer is used to multiplex signals between the power peripheral blocks. The CPU configures the Power Peripherals Analog Multiplexer connections using memory mapped registers. The analog multiplexer includes the following key features:

- Connect signals to ensure needed flexibility
- Ensure signal integrity for minimum signal corruption
- Configurability via Cypress PSoC Designer 5.0

Digital Multiplexer

The digital multiplexer is used to multiplex signals between the power peripheral blocks.The Power Peripherals Digital Multiplexer is a configurable switching matrix that connects the power peripheral digital resources. This Power Peripheral Digital Multiplexer is independent of the main PSoC digital buses or global of the PSoC core. The digital multiplexer includes the following key features:

- Connect signals to ensure needed flexibility
- Ensure signal for minimum signal corruption
- Configurability via Cypress PSoC Designer 5.0

Function Pin (FN0[0:3])

The function I/O pins are a set of dedicated control pins used to perform system level functions of the power peripherals blocks of the PowerPSoC. These pins are dynamically configurable, enabling them to perform a multitude of input and output functions. These I/Os have direct access to the input and output of the voltage comparators, input of the hysteretic controller, and output of the digital modulator blocks for the device.

Some of the key system benefits of the function I/O are:

- Enabling higher voltage current-sense amplifier as shown in External CSA and FET Application
- Synchronizing dimming of multiple PowerPSoC controllers as shown in PowerPSoC in Master/Slave Configuration
- Programmable fail-safe monitor and dedicated shutdown of hysteretic controller as shown in Event Detection

Along with the above functionality, these I/Os also provide interrupt functionality enabling intelligent system responses to power control lighting system status.

OBSOLETE

External CSA and FET Application

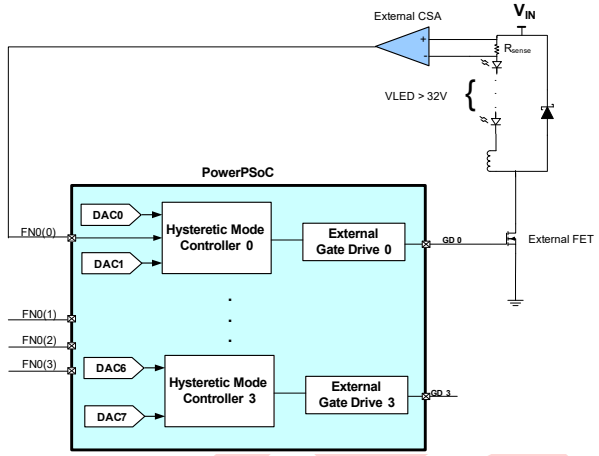

PowerPSoC in Master/Slave Configuration

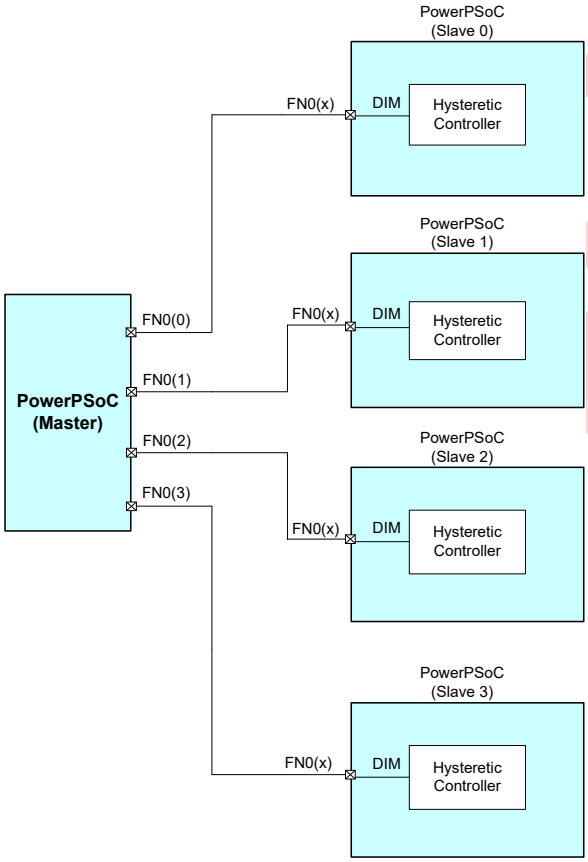

Event Detection

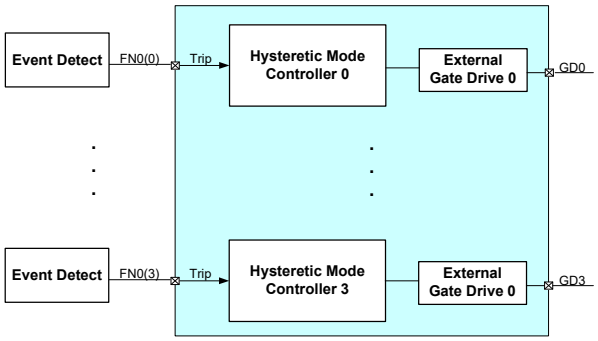

Channel Bonding

This feature is implemented by driving gate driver inputs using any of the hysteretic controller output. This is implemented by adding 4:1 multiplexers at the input of each gate driver. The selection is done using register bits as shown in the CHBOND_CR register on page 373. This allows supporting more than 1A per channel by shorting multiple power FET drain terminals. For example, by shorting power FET 1 and 2 outputs, we can get 2A per channel. Similarly, by shorting all four channels, a 4A single channel part can be achieved.

Interrupt

The six bank comparators available in the PowerPSoC can generate interrupts. The interrupt is generated when the output voltage of the comparator goes high due to a condition on the positive (INP) and negative (INN) inputs of the comparator.

OBSOLETE

Application Description of the PowerPSoC

The PowerPSoC device can be used for a wide variety of applications that need high performance and high efficiency (Efficiency>90%) power supplies with built-in intelligence to target LED lighting control.

LED Lighting with RGGB Color Mixing, Configured as a Floating Load Buck Converter

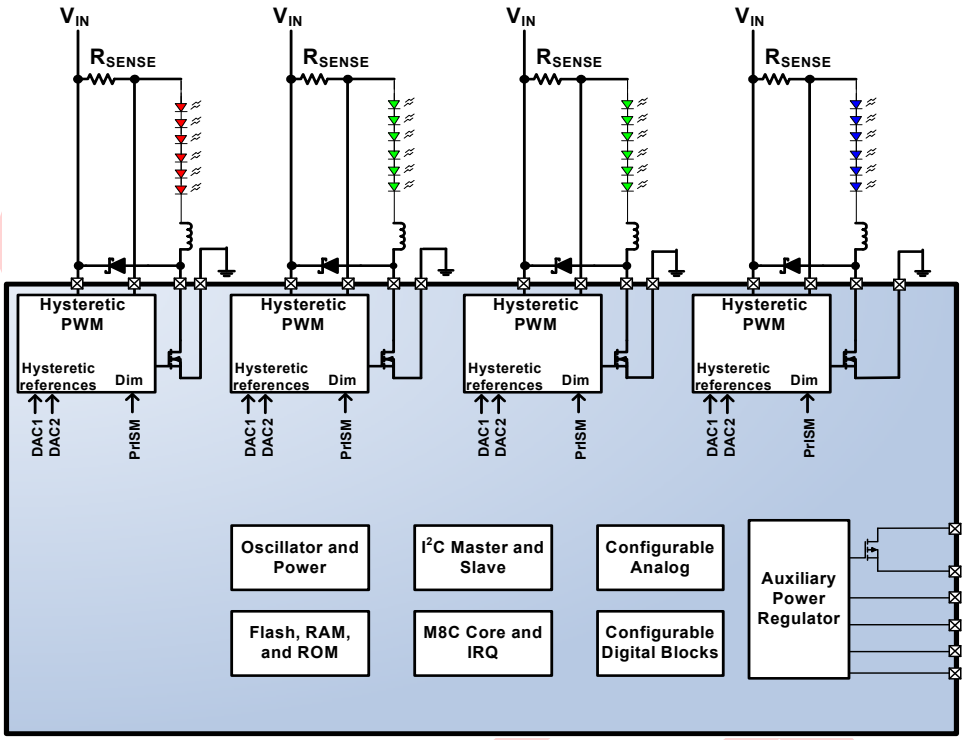

OBSOLETE

LED Lighting with RGBA Color Mixing Driving External MOSFETS as a Floating Load Buck Converter

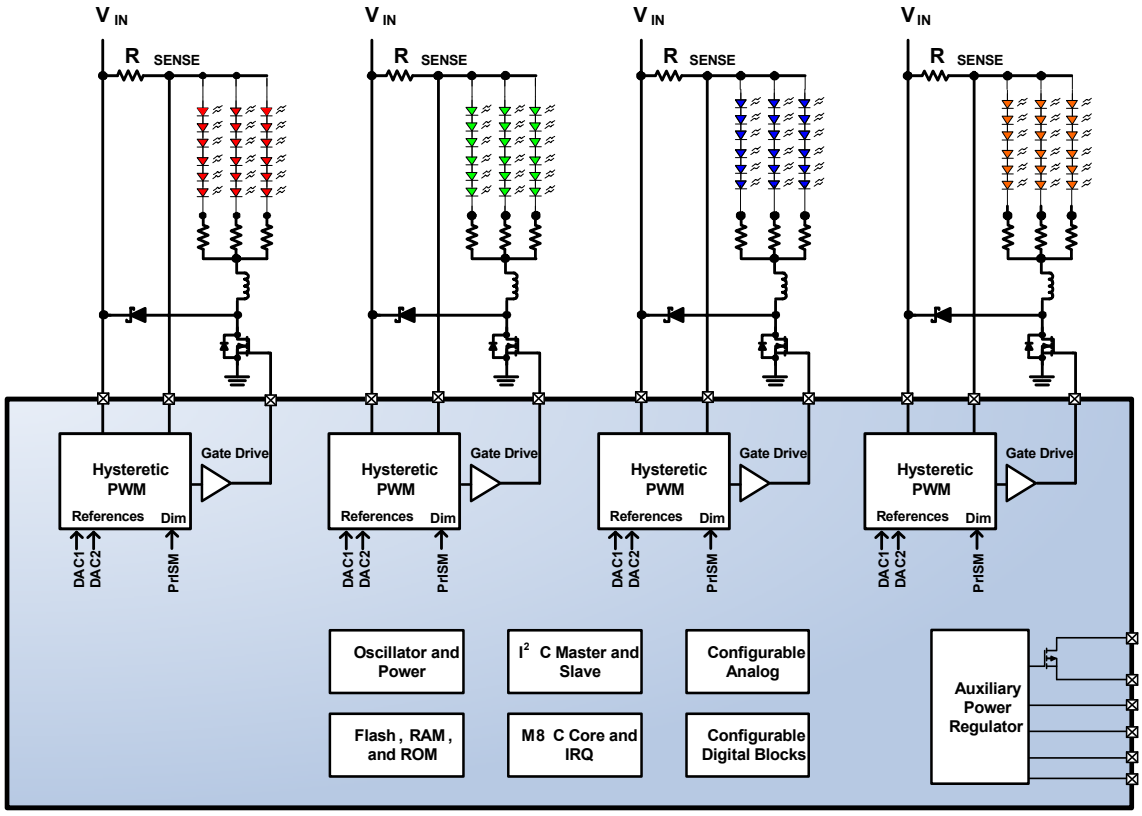

LED Lighting with a Single Channel Boost Driving Three Floating Load Buck Channels

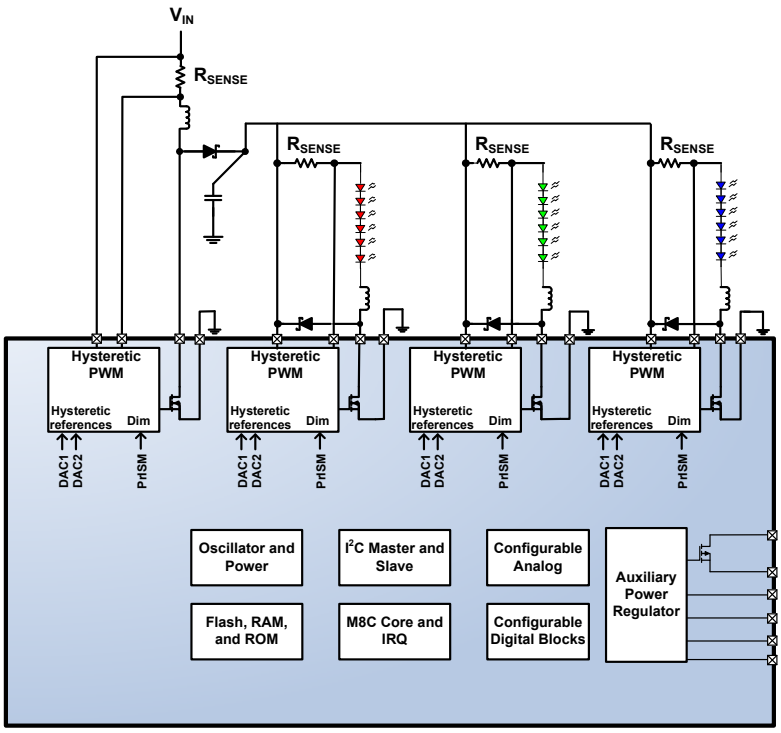

LED Lighting with RGB Color Mixing as a Boost Converter

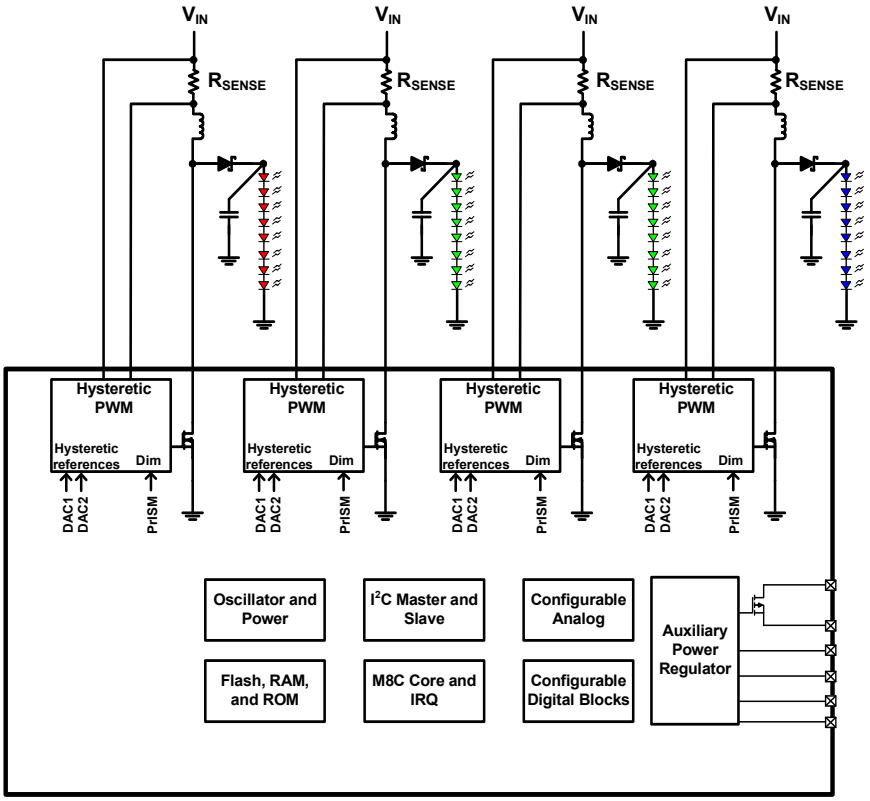

Power Peripherals Register Summary

The registers associated with each IP inside the Power Peripherals is described in full in the corresponding sections of this document.

The table below lists all the Power Peripherals registers. The bits that are grayed out are reserved bits. If these bits are written, they should always be written with a value of '0'.

Summary Table of the Power Peripherals Registers

Address	Name	Bit 7	Bit 6	Bit 5	Bit 4	Bit 3	Bit 2	Bit 1	Bit 0	Access
CURRENT SENSE AMPLIFIER (CSA) REGISTERS (page 286)										
1,40h	CSAx_CR			BW[1:0]					ENABLE	RW : 0
1,44h				BW[1:0]					ENABLE	RW : 0
1,48h				BW[1:0]					ENABLE	RW : 0
1,4Ch				BW[1:0]					ENABLE	RW : 0
DIGITAL-TO-ANALOG CONVERTER (VDAC) REGISTERS (page 290)										
0,A0h	VDACx_CR							MODE	EN	RW : 0
0,A4h								MODE	EN	RW : 0
0,9Ch								MODE	EN	RW : 0
0,C0h								MODE	EN	RW : 0
0,C4h								MODE	EN	RW : 0
0,C8h								MODE	EN	RW : 0
0,CCh								MODE	EN	RW : 0
0,A1h	VDACx_DR0	Data[7:0]								RW : 00
0,A5h		Data[7:0]								RW : 00
0,9Dh		Data[7:0]								RW : 00
0,C1h		Data[7:0]								RW : 00
0,C5h		Data[7:0]								RW : 00
0,C9h		Data[7:0]								RW : 00
0,CDh		Data[7:0]								RW : 00
0,A2h	VDACx_DR1	Data[7:0]								RW : 00
0,A6h		Data[7:0]								RW : 00
0,9Eh		Data[7:0]								RW : 00
0,C2h		Data[7:0]								RW : 00
0,C6h		Data[7:0]								RW : 00
0,CAh		Data[7:0]								RW : 00
0,CEh		Data[7:0]								RW : 00
COMPARATOR REGISTERS (page 298)										
1,C0h	CMPCHx_CR	INVERT_O		HYS_XL_O	EN_O	INVERT_E		HYS_XL_E	EN_E	RW : 00
1,C1h		INVERT_O		HYS_XL_O	EN_O	INVERT_E		HYS_XL_E	EN_E	RW : 00
1,C2h		INVERT_O		HYS_XL_O	EN_O	INVERT_E		HYS_XL_E	EN_E	RW : 00
1,C3h		INVERT_O		HYS_XL_O	EN_O	INVERT_E		HYS_XL_E	EN_E	RW : 00
1,C4h	***CMPBNKx_CR***					INVERT		HYS_XL	EN	RW : 0
1,C5h						INVERT		HYS_XL	EN	RW : 0
1,C6h						INVERT		HYS_XL	EN	RW : 0
1,C7h						INVERT		HYS_XL	EN	RW : 0
1,C8h						INVERT		HYS_XL	EN	RW : 0
1,C9h						INVERT		HYS_XL	EN	RW : 0
GATE DRIVER REGISTERS (page 347)										
1,79h	GDRVx_CR					DRV_STR[1:0]		INT	EXT	RW : 0
1,7Bh						DRV_STR[1:0]		INT	EXT	RW : 0
1,7Dh						DRV_STR[1:0]		INT	EXT	RW : 0
1,7Fh						DRV_STR[1:0]		INT	EXT	RW : 0

CY PRELIMINARY

Summary Table of the Power Peripherals Registers *(continued)*

Address	Name	Bit 7	Bit 6	Bit 5	Bit 4	Bit 3	Bit 2	Bit 1	Bit 0	Access
DIGITAL MODULATOR BLOCK REGISTERS (page 328)										
0,40h	DPWMx_PCF	PCF[7:0]								RW : 00
0,48h		PCF[7:0]								RW : 00
0,50h		PCF[7:0]								RW : 00
0,58h		PCF[7:0]								RW : 00
0,41h	DPWMx_PDH	PERIOD[15:8]								RW : 00
0,49h		PERIOD[15:8]								RW : 00
0,51h		PERIOD[15:8]								RW : 00
0,59h		PERIOD[15:8]								RW : 00
0,42h	DPWMx_PDL	PERIOD[7:0]								RW : 00
0,4Ah		PERIOD[7:0]								RW : 00
0,52h		PERIOD[7:0]								RW : 00
0,5Ah		PERIOD[7:0]								RW : 00
0,43h	DPWMx_PWH	PW[15:8]								RW : 00
0,4Bh		PW[15:8]								RW : 00
0,53h		PW[15:8]								RW : 00
0,5Bh		PW[15:8]								RW : 00
0,44h	DPWMx_PWL	PW[7:0]								RW : 00
0,4Ch		PW[7:0]								RW : 00
0,54h		PW[7:0]								RW : 00
0,5Ch		PW[7:0]								RW : 00
0,45h	DPWMx_PCH	PC[15:8]								RW : 00
0,4Dh		PC[15:8]								RW : 00
0,55h		PC[15:8]								RW : 00
0,5Dh		PC[15:8]								RW : 00
0,46h	DPWMx_PCL	PC[7:0]								RW : 00
0,4Eh		PC[7:0]								RW : 00
0,56h		PC[7:0]								RW : 00
0,5Eh		PC[7:0]								RW : 00
0,47h	DPWMx_GCFG						MODE[1:0]		GLEN	RW : 0
0,4Fh							MODE[1:0]		GLEN	RW : 0
0,57h							MODE[1:0]		GLEN	RW : 0
0,5Fh							MODE[1:0]		GLEN	RW : 0
0,78h	DPWMxPCFG		CEN-TRE_INT_LOC	DSM_RESOLUTION[1:0]		ALIGN[1:0]		COMPTYPE	INTTYPE	RW : 00
0,79h			CEN-TRE_INT_LOC	DSM_RESOLUTION[1:0]		ALIGN[1:0]		COMPTYPE	INTTYPE	RW : 00
0,7Ah			CEN-TRE_INT_LOC	DSM_RESOLUTION[1:0]		ALIGN[1:0]		COMPTYPE	INTTYPE	RW : 00
0,7Bh			CEN-TRE_INT_LOC	DSM_RESOLUTION[1:0]		ALIGN[1:0]		COMPTYPE	INTTYPE	RW : 00
0,7Ch	DPWMINT-FLAG					PWM_INT3	PWM_INT2	PWM_INT1	PWM_INT0	RW : 0
0,7Dh	DPWMINTMSK	MSK_HP3	MSK_HP2	MSK_HP1	MSK_HP0	MSK_LP3	MSK_LP2	MSK_LP1	MSK_LP0	RW : 00
0,7Eh	DPWMSYNC	S4PWM3	S4PWM2	S4PWM1	S4PWM0	CLK_SEL	SYNC_MASTER_SEL[1:0]		SYNC_-MODE	RW : 00
ANALOG MUX REGISTERS (page 303)										
0,67h	PAMUX_S1	S3[1:0]		S2[1:0]		S1[1:0]		S0[1:0]		RW : 00
0,68h	PAMUX_S2	S7[1:0]		S6[1:0]		S5[1:0]		S4[1:0]		RW : 00
0,69h	PAMUX_S3	S11[1:0]		S10[1:0]		S9[1:0]		S8[1:0]		RW : 00

OBSOLETE

Summary Table of the Power Peripherals Registers *(continued)*

Address	Name	Bit 7	Bit 6	Bit 5	Bit 4	Bit 3	Bit 2	Bit 1	Bit 0	Access
0,6Ah	PAMUX_S4			S16[1:0]		S15	S14	S13	S12	RW : 00
DIGITAL MUX REGISTERS (page 308)										
0,18h	PDMUX_S1			HYST_DIM1[2:0]			HYST_DIM0[2:0]			RW : 00
0,19h	PDMUX_S2			HYST_DIM3[2:0]			HYST_DIM2[2:0]			RW : 00
0,1Ah	PDMUX_S3	HYST_TRIP1[3:0]				HYST_TRIP0[3:0]				RW : 00
0,1Bh	PDMUX_S4	HYST_TRIP3[3:0]				HYST_TRIP2[3:0]				RW : 00
0,1Ch	PDMUX_S5	GPIO1_SEL[3:0]				GPIO0_SEL[3:0]				RW : 00
0,1Dh	PDMUX_S6	GPIO3_SEL[3:0]				GPIO2_SEL[3:0]				RW : 00
HYSTERETIC CONTROLLER REGISTERS (page 318)										
1,D4h	HYSCTLRx_CR					MONOSHOT[1:0		HYST_CREG[a]	EN	# : 0
1,D5h						MONOSHOT[1:0		HYST_CREG[a]	EN	# : 0
1,D6h						MONOSHOT[1:0		HYST_CREG[a]	EN	# : 0
1,D7h						MONOSHOT[1:0		HYST_CREG[a]	EN	# : 0
SWITCHING REGULATOR REGISTER (page 356)										
1,DCh	SREG_TST		POR_XH_REG						PD_XH	RW : 0

a.The HYST_CREG bit is a Write Only bit.

OBSOLETE

OBSOLETE

29. Current Sense Amplifier

This chapter explains the Current Sense Amplifier (CSA) and its associated registers. For a complete table of the CSA registers, refer to the "Power Peripherals Register Summary" on page 279. For a quick reference of all PowerPSoC registers in address order, refer to the Register Details chapter on page 361.

Figure 29-1 shows the role and position of the CSA (highlighted) in the entire power peripherals system. The power peripherals have been configured to drive LEDs in floating a load buck configuration using the internal FET with digital modulation and trip protection. The CSA provides feedback to the hysteretic controller in this system.

Figure 29-1. Block Diagram Highlighting CSAs

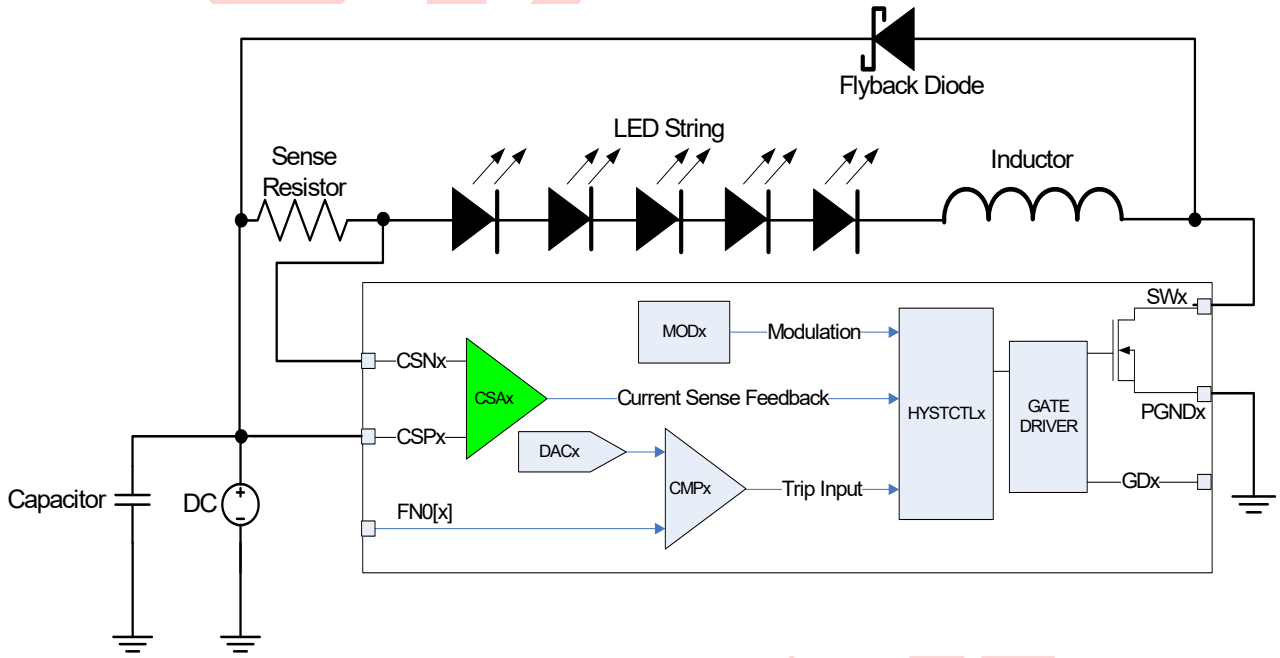

29.1 Architectural Description

The CSA in the PowerPSoC family of devices consists of two amplifier stages as shown in Figure 29-2. Stage1 is the primary level-shifting stage that translates the differential signal across INP and INN to the low-voltage realm. It operates by reproducing the V_{SENSE} voltage as V'_{SENSE} across resistor R_P and sending the resulting current, I_L, across R_L. The DC gain of Stage1 is simply the ratio of R_L/R_P.

Stage2 amplifies the signal and provides a lower impedance output drive. The signal at the output is:

Equation 1

$$V_{out} = \left(1 + \frac{R_X}{R_Y}\right) V_{out1} = \left(1 + \frac{R_X}{R_Y}\right)\left(\frac{R_L}{R_P}\right) V_{sense}$$

...where V_{OUT1} is the voltage at the output of Stage1.

The iref_gen block receives an on-chip system reference current (via IREF) and produces the bias currents necessary to activate the two stages.

Figure 29-2. Current Sense Amplifier Architecture Overview

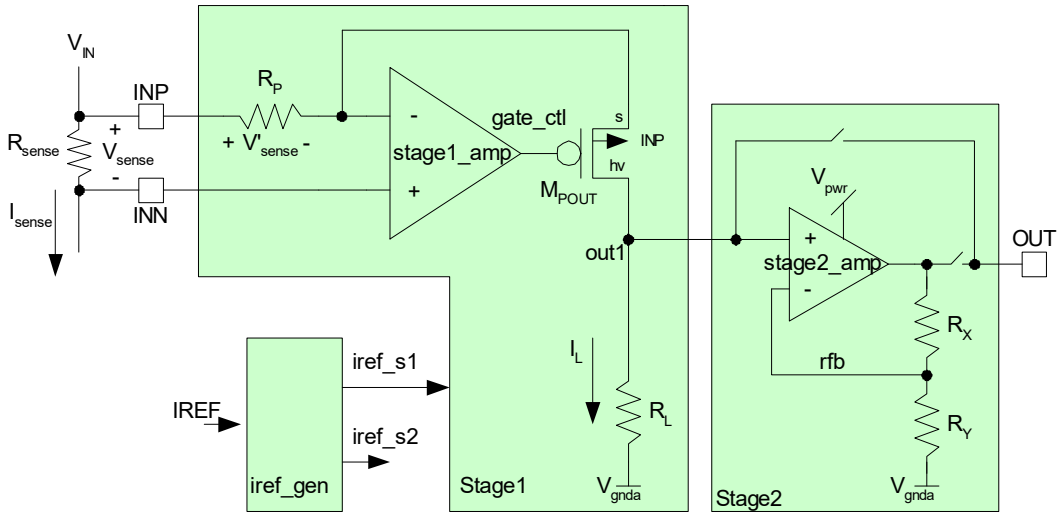

29.2 Application Description

An example application supported by this current sense amplifier (CSA) is shown in Figure 29-3. In this example, two of four independent LED lighting channels is illustrated. V_{IN} voltages are high to support current flow through many LEDs connected in series. To provide application flexibility, each channel V_{IN} value is allowed to have different voltages.

Figure 29-4 illustrates a more detailed application diagram of the CSA, showing internal block interaction. The output of the CSA is delivered to comparators with thresholds set by the PowerPSoC's internal digital-to-analog converter (DAC).

Following is an example of four independent channels expected to be supported by the current sense amplifier. Each V_{IN} can have a different voltage.

Figure 29-3. Four Independent Channels Example

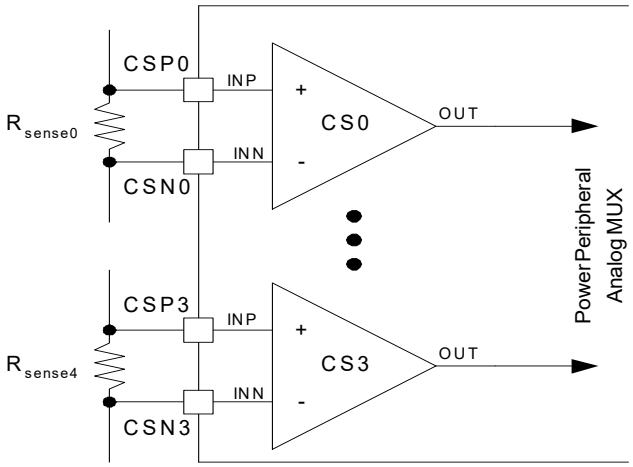

Following is a more detailed application diagram of the CSA as it appears in one application. V_{IN} can be a very high voltage and V_{OUT} is delivered to on-chip comparators.

Figure 29-4. Detailed CSA Application Diagram

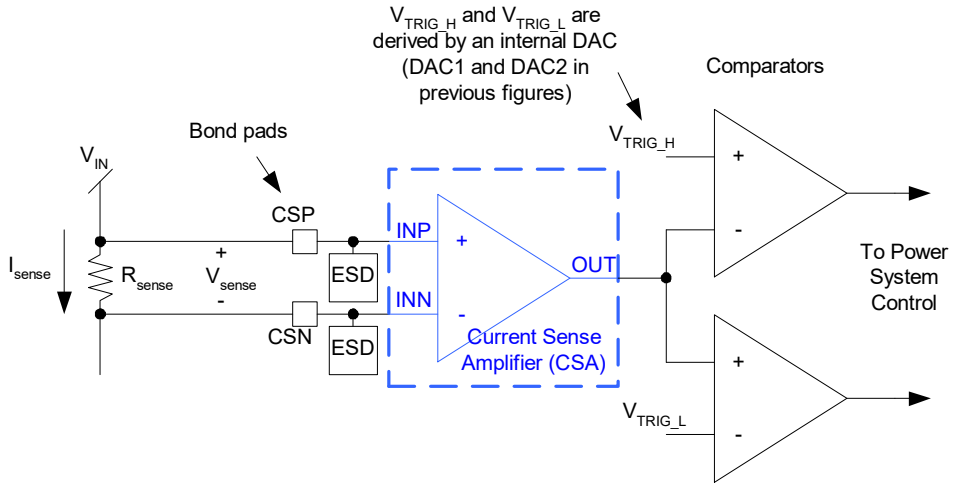

29.3 Register Definitions

The following registers are associated with the Current Sense Amplifier (CSA) and are listed in address order. Each register description has an associated register table showing the bit structure for that register. For a complete table of CSA registers, refer to the “Summary Table of the Analog Registers” on page 163.

The bits that are grayed out throughout this manual are reserved bits and are not detailed in the register descriptions that follow. Reserved bits should always be written with a value of ‘0’.

29.3.1 CSAx_CR Current Sense Amplifier Control Register

Add.	Name	Bit 7	Bit 6	Bit 5	Bit 4	Bit 3	Bit 2	Bit 1	Bit 0	Access
1,40h	CSA0_CR			BW[1:0]					ENABLE	RW : 00
1,44h	CSA1_CR			BW[1:0]					ENABLE	RW : 00
1,48h	CSA2_CR			BW[1:0]					ENABLE	RW : 00
1,4Ch	CSA3_CR			BW[1:0]					ENABLE	RW : 00

The Current Sense Amplifier Control Register (CSAx_CR) contains the control bit for enabling the CSA, gain adjustment, and configuration.

Bits 5 to 4: BW[1:0]. These bits are bandwidth configuration for Stage1. ‘00’ is highest, no capacitance added to Stage 1 output (default). ‘01’ is medium high. ‘10’ is medium low. ‘11’ is lowest, most capacitance added.

The BW bits provide bandwidth adjustment capability, allowing trade offs in bandwidth, time delay, and PSRR. BW controls the capacitance load at the output of Stage1. Because it is associated with the output of Stage1, it affects both configuration modes (CONFIG = ‘0’, ‘1’).

Bit 3: Reserved.

Bits 2 to 1: Reserved.

Bit 0: ENABLE. ‘0’ disables the CSA. ‘1’ enables the CSA.

For additional information, refer to the CSAx_CR register on page 478.

OBSOLETE

30. Digital-to-Analog Converter

This chapter explains the Digital-to-Analog Converter (VDAC) and its associated registers.

The PowerPSoC family of devices consists of six Digital-to-Analog Converters that are organized as three pairs, where each pair shares some common hardware resources. These DACs are available for applications such as over-current protection and over-temperature shut out. In addition to these six DACs, PowerPSoC devices also have a dedicated pair of DACs integrated into each of its hysteretic controllers. Both these types of DACs are architecturally similar.

For a complete table of the VDAC registers, refer to the "Power Peripherals Register Summary" on page 279. For a quick reference of all PowerPSoC registers in address order, refer to the Register Details chapter on page 361.

Figure 30-1shows the role and position of the digital-to-analog converter (highlighted) in the entire power peripherals system. The power peripherals have been configured to drive LEDs in a floating load buck configuration using the internal FET with digital modulation and trip protection. The DAC's role here is to provide a reference to the trip comparator.

Figure 30-1. Block Diagram Highlighting VDAC

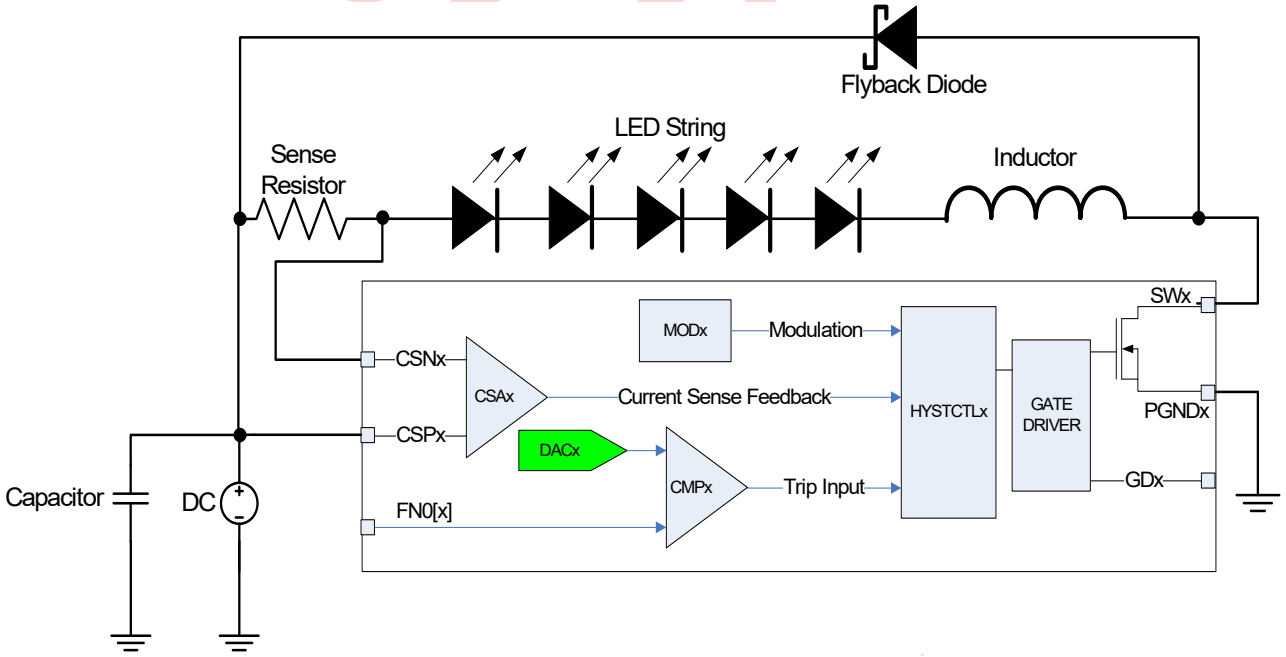

30.1 Architectural Description

30.1.1 Block Overview (VDAC)

The VDAC in the PowerPSoC family of devices provides DAC pair output voltages, i.e., there are two separate DAC output voltages, VAREF0 and VAREF1. Figure 30-2 shows the simplified block diagram illustrating the principal of operation of the VDAC, in which VDAC_DR0, VDAC_DR1 registers control the current flowing through the resistance R.

Figure 30-2. Simplified Block Diagram of Dual Output VDAC

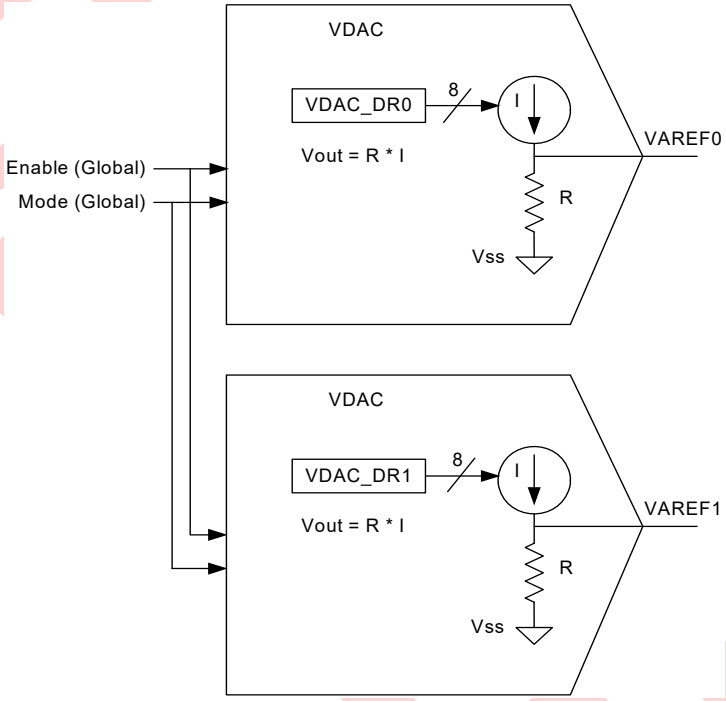

The VDAC sub-system contains two 8-bit VDACs, a reference array, and a reference amplifier. The reference array and the amplifier are shared between the VDACs. Both the VDACs are enabled with a single control bit (EN) in the VDAC control register (VDAC_CR). VDAC ranging (MODE) is also a global control for the VDAC sub-system.

The VDAC will use full thermometer coding to guarantee monotonicity as only one additional current source is switched on per DAC code transition.

The VDAC current source array consists of 16x16 unit cells as seen in Figure 30-3. A unit cell schematic can be found in Figure 30-4, consisting of a current mirror, a cascode, a switch, and some decoding logic.

Figure 30-3. Block Diagram of Thermometer Coding Array

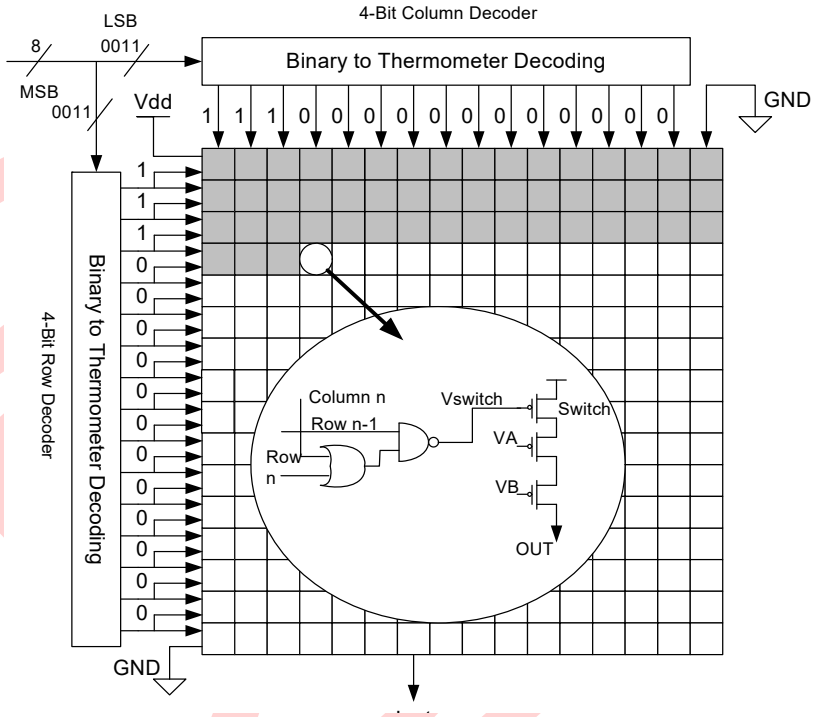

Figure 30-4. Block Diagram of Thermometer Coded Unit Cell

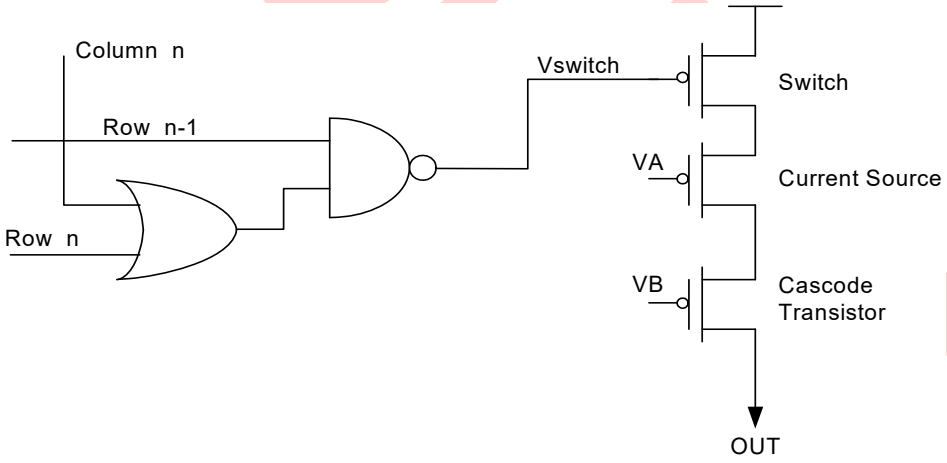

30.2 Application Description

The reference DACs are used to generate set points for various analog modules such as hysteretic PWMs, comparators, and error amplifiers in the power conversion systems.

The output of the VDAC (8-bit array) is not intended to route outside the package, but instead is used as an adjustable reference to the other internal blocks. There are two VDAC outputs. The output of the VDAC has a range from 0V (00h) to 1.3V (FFh) when MODE = 1 or 0V (00h) to 2.6V (FFh) when MODE = 0.

30.3 Register Definitions

The following registers are associated with the VDAC sub-system and are listed in address order. Each register description has an associated register table showing the bit structure for that register. For a complete table of VDAC registers, refer to the "Power Peripherals Register Summary" on page 279.

The bits that are grayed out throughout this manual are reserved bits and are not detailed in the register descriptions that follow. Reserved bits should always be written with a value of '0'. Table 30-1 shows the VDAC register mapping for DAC bank and channel DACS.

Table 30-1. VDAC Register Mapping

VDAC0_CR	Control Register for Hysteretic Channel 0 VDACs, REF_A (VDAC0) and REF_B (VDAC1)
VDAC0_DR0	Data Register for Hysteretic Channel 0 VDAC, REF_A (VDAC0)
VDAC0_DR1	Data Register for Hysteretic Channel 0 VDAC, REF_B (VDAC1)
VDAC1_CR	Control Register for Hysteretic Channel 1 VDACs, REF_A (VDAC2) and REF_B (VDAC3)
VDAC1_DR0	Data Register for Hysteretic Channel 1 VDAC, REF_A (VDAC2)
VDAC1_DR1	Data Register for Hysteretic Channel 1 VDAC, REF_B (VDAC3)
VDAC2_CR	Control Register for Hysteretic Channel 2 VDACs, REF_A (VDAC4) and REF_B (VDAC5)
VDAC2_DR0	Data Register for Hysteretic Channel 2 VDAC, REF_A (VDAC4)
VDAC2_DR1	Data Register for Hysteretic Channel 2 VDAC, REF_B (VDAC5)
VDAC3_CR	Control Register for Hysteretic Channel 3 VDACs, REF_A (VDAC6) and REF_B (VDAC7)
VDAC3_DR0	Data Register for Hysteretic Channel 3 VDAC, REF_A (VDAC6)
VDAC3_DR1	Data Register for Hysteretic Channel 3 VDAC, REF_B (VDAC7)
VDAC4_CR	Control Register for DAC Bank VDAC8 and VDAC9
VDAC4_DR0	Data Register for DAC Bank VDAC9
VDAC4_DR1	Data Register for DAC Bank VDAC8
VDAC5_CR	Control Register for DAC Bank VDAC10 and VDAC11
VDAC5_DR0	Data Register for DAC Bank VDAC11
VDAC5_DR1	Data Register for DAC Bank VDAC10
VDAC6_CR	Control Register for DAC Bank VDAC12 and VDAC13
VDAC6_DR0	Data Register for DAC Bank VDAC13
VDAC6_DR1	Data Register for DAC Bank VDAC12

OBSOLETE

30.3.1 VDACx_CR (Voltage DAC Control Register)

Add.	Name	Bit 7	Bit 6	Bit 5	Bit 4	Bit 3	Bit 2	Bit 1	Bit 0	Access
0,A0h	VDAC4_CR							MODE	EN	RW : 0
0,A4h	VDAC5_CR							MODE	EN	RW : 0
0,9Ch	VDAC6_CR							MODE	EN	RW : 0
0,C0h	VDAC0_CR							MODE	EN	RW : 0
0,C4h	VDAC1_CR							MODE	EN	RW : 0
0,C8h	VDAC2_CR							MODE	EN	RW : 0
0,CCh	VDAC3_CR							MODE	EN	RW : 0

The Voltage DAC Control Register (VDACx_CR) is used to enable and set the mode. VDAC0_CR to VDAC3_CR control the hysteretic channel 0 to hysteretic channel 3. VDAC4_CR to VDAC6_CR are the DAC bank registers.

Bit 1: MODE. This bit sets the VDAC output range and step size.

‘0’ is VAREF x output range = 0 to 2.6V (10 mV step size). ‘1’ is VAREF x output range = 0 to 1.3V (5 mV step size).

Bit 0: EN. ‘0’ disables the VDAC. This powers down the VDAC and all of its output references go to 0V. ‘1’ enables the VDAC.

For additional information, refer to the VDACx_CR register on page 417.

30.3.2 VDACx_DR0 (Voltage DAC Data Register 0)

Add.	Name	Bit 7	Bit 6	Bit 5	Bit 4	Bit 3	Bit 2	Bit 1	Bit 0	Access
0,A1h	VDAC4_DR0	Data[7:0]								RW : 00
0,A5h	VDAC5_DR0	Data[7:0]								RW : 00
0,9Dh	VDAC6_DR0	Data[7:0]								RW : 00
0,C1h	VDAC0_DR0	Data[7:0]								RW : 00
0,C5h	VDAC1_DR0	Data[7:0]								RW : 00
0,C9h	VDAC2_DR0	Data[7:0]								RW : 00
0,CDh	VDAC3_DR0	Data[7:0]								RW : 00

The Voltage DAC Data Register 0 (VDACx_DR0) is used to set the voltage reference for VAREF0 of the DAC, thereby providing analog output equivalent for VAREF0 to digital code. VDAC0_DR0 to VDAC3_DR0 control the hysteretic channel 0 to hysteretic channel 3. VDAC4_DR0 to VDAC6_DR0 are the DAC bank registers.

Bits 7 to 0: Data[7:0]. This register is used to set the voltage reference for the DAC channel 0.

‘00h’ is the lowest reference voltage setting (0V). ‘80h’ is the mid reference voltage setting. ‘FFh’ is the highest reference voltage setting.

The VDAC range is determined by the MODE bit set in the VDAC_CR register. The highest reference setting is 1.3V for MODE = 1 or 2.6V for MODE = 0.

For additional information, refer to the VDACx_DR0 register on page 418.

OBSOLETE

30.3.3 VDACx_DR1 (Voltage DAC Data Register 1)

Add.	Name	Bit 7	Bit 6	Bit 5	Bit 4	Bit 3	Bit 2	Bit 1	Bit 0	Access
0,A2h	VDAC4_DR1	Data[7:0]								RW : 00
0,A6h	VDAC5_DR1	Data[7:0]								RW : 00
0,9Eh	VDAC6_DR1	Data[7:0]								RW : 00
0,C2h	VDAC0_DR1	Data[7:0]								RW : 00
0,C6h	VDAC1_DR1	Data[7:0]								RW : 00
0,CAh	VDAC2_DR1	Data[7:0]								RW : 00
0,CEh	VDAC3_DR1	Data[7:0]								RW : 00

The Voltage DAC Data Register 1 (VDACx_DR1) is used to set the voltage reference for VAREF1 of the DAC, thereby providing analog output equivalent for VAREF1 to digital code. VDAC0_DR1 to VDAC3_DR1 control the hysteretic channel 0 to hysteretic channel 3. VDAC4_DR1 to VDAC6_DR1 are the DAC bank register.

Bits 7 to 0: Data[7:0]. This register is used to set the voltage reference for the DAC channel 1.

'00h' is the lowest reference voltage setting (0V). '80h' is the mid reference voltage setting. 'FFh' is the highest reference voltage setting.

The VDAC range is determined by the MODE bit set in the VDAC_CR register. The highest reference setting is 1.3V for MODE = 1 or 2.6V for MODE = 0.

For additional information, refer to the VDACx_DR1 register on page 419.

OBSOLETE

30.4 Timing Diagrams

Figure 30-5. VDAC Powerup Sequence

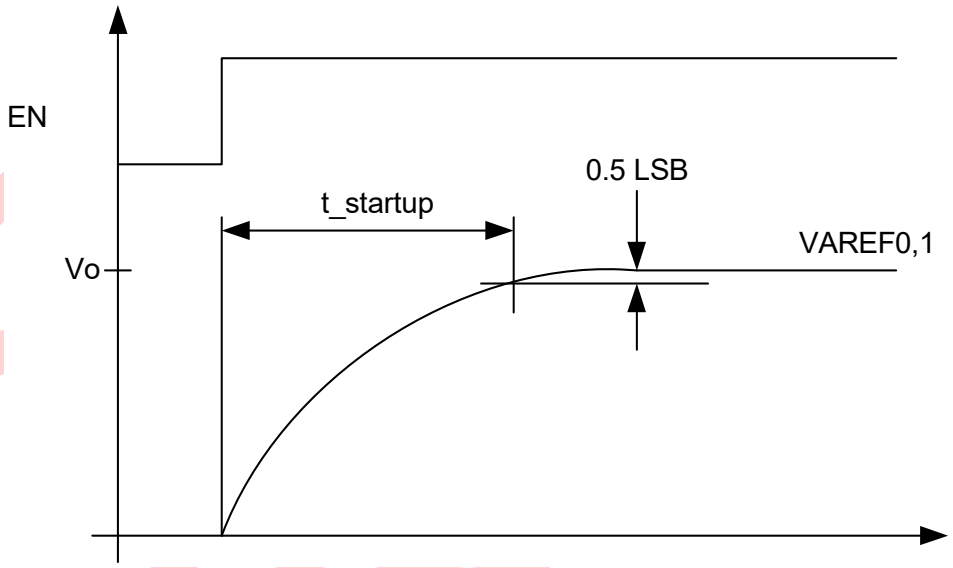

t_startup = time taken by the output voltages to reach within 0.5 LSB of the final value when the EN pin goes high. Vo = output voltage of the VDAC, which is VAREF0, VAREF1.

Figure 30-5 shows that when the EN pin goes high, output voltages VAREF0, VAREF1 raises its corresponding voltage.

OBSOLETE

OBSOLETE

31. Comparator

This chapter explains the Comparator and its associated registers. The PowerPSoC family of devices contain a bank of six hardware comparators. These comparators can be used to implement functions such as over current protection and over temperature shut off. In addition to these six comparators, there are two hardware comparators also integrated into each of the hysteretic controllers. There is also a hardware comparator inside the switching regulator that produces the 5V supply for the device. All these comparators have a similar architecture.

For a complete table of the Comparator registers, refer to the "Power Peripherals Register Summary" on page 279. For a quick reference of all PowerPSoC registers in address order, see the Register Details chapter on page 361.

Figure 31-1shows the role and position of the comparator (highlighted) in the entire power peripherals system. The power peripherals have been configured to drive LEDs in a floating load buck configuration using the internal FET with digital modulation and trip protection. The comparator performs the role of tripping the hysteretic controller off in case of an over-current condition in this system.

Figure 31-1. Block Diagram Highlighting the Comparator

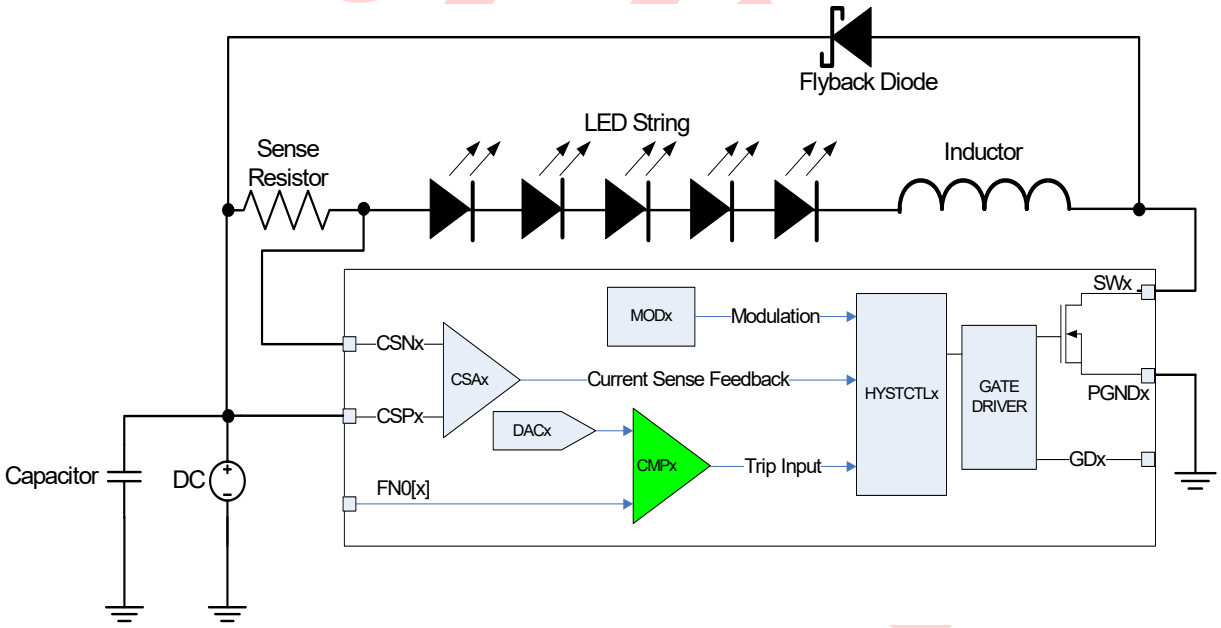

31.1 Architectural Description

The CY8CLED0xx0x PowerPSoC device comparator compares the input signal with a reference signal and outputs the result. The comparator has a power down feature to turn on and off the power to the comparator. The comparator has rail-to-rail operation, with 10 mV hysteresis that can be enabled or disabled.

31.1.1 Comparator Interrupts

The six Bank Comparators are capable of generating interrupts. Interrupts are generated when the output voltage of the comparator goes high due to a condition on the positive (INP) and negative (INN) of the comparators. Details of the interrupt mask and clear register bits are explained in the Interrupt Controller chapter on page 71.

31.2 Application Description

This comparator is designed to support a number of different applications for the PowerPSoC device family, beginning with the CY8CLED0xx0x devices.

31.2.1 Applications

The CY8CLED0xx0x can be used for the following applications:

Hysteretic Mode PWM in which it takes a reference voltage from a DAC and a feedback voltage from the current sense amplifier to switch ON/OFF the power FET in the control loop. This is shown Figure 31-2.

Figure 31-2. Single Hysteretic Controller Block Diagram

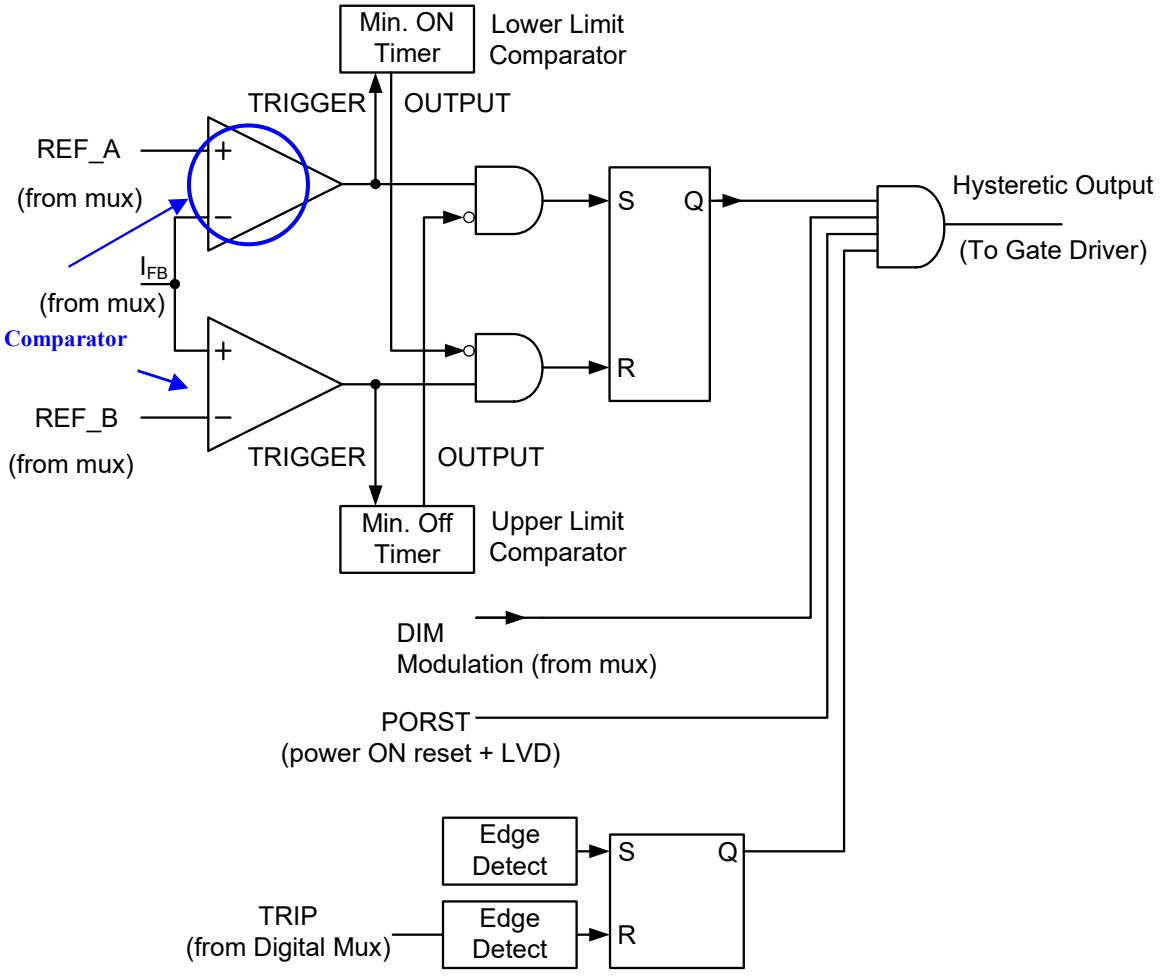

1. **Voltage Comparator** in which the voltage comparator bank is between the analog mux and the digital mux. This is shown in Figure 31-3.

   One example application is the Over Temperature Shut Out; in which it turns OFF the power section of the device by comparing the output of a temperature sensor and a known reference voltage.

Figure 31-3. Voltage Comparators Between Analog Mux and Digital Mux

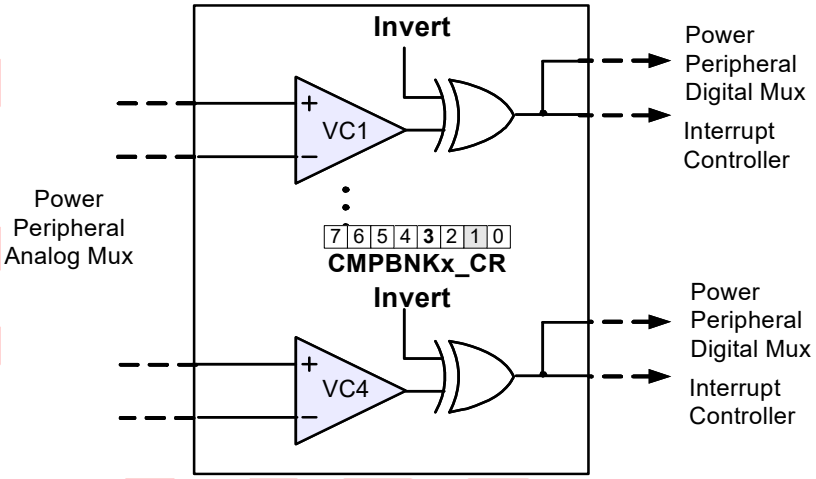

OBSOLETE

31.3 Register Definitions

The following registers are associated with the Comparator and are listed in address order. Each register description has an associated register table showing the bit structure for that register. For a complete table of Comparator registers, refer to the "Power Peripherals Register Summary" on page 279.

The bits that are grayed out throughout this manual are reserved bits and are not detailed in the register descriptions that follow. Reserved bits should always be written with a value of '0'.

31.3.1 CMPCHx_CR Power Channel Comparator Control Register

Add.	Name	Bit 7	Bit 6	Bit 5	Bit 4	Bit 3	Bit 2	Bit 1	Bit 0	Access
1,C0h	CMPCH0_CR	INVERT_O		HYS_XL_O	EN_O	INVERT_E		HYS_XL_E	EN_E	RW : 00
1,C1h	CMPCH2_CR	INVERT_O		HYS_XL_O	EN_O	INVERT_E		HYS_XL_E	EN_E	RW : 00
1,C2h	CMPCH4_CR	INVERT_O		HYS_XL_O	EN_O	INVERT_E		HYS_XL_E	EN_E	RW : 00
1,C3h	CMPCH6_CR	INVERT_O		HYS_XL_O	EN_O	INVERT_E		HYS_XL_E	EN_E	RW : 00

The Power Channel Comparator Control Register (CMPCHx_CR) is used to enable and configure the comparator block (even and odd) in the hysteretic channel.

Bit 7: INVERT_O. Output invert select for odd comparators (CMP 1/3/5/7). '0' is non-invert output. '1' is invert output.

Bit 5: HYS_XL_O. Hysteresis enable, active low for odd comparators (CMP 1/3/5/7). '0' is hysteresis enabled. '1' is hysteresis disabled.

Bit 4: EN_O. Block enable signal for odd comparators (CMP 1/3/5/7). '0' is block disabled (output low). '1' is block enabled.

Bit 3: INVERT_E. Output invert select for even comparators (CMP 0/2/4/6). '0' is non-invert output. '1' is invert output.

Bit 1: HYS_XL_E. Hysteresis enable, active low for even comparators (CMP 0/2/4/6). '0' is hysteresis enabled. '1' is hysteresis disabled.

Bit 0: EN_E. Block enable signal for even comparators (CMP 0/2/4/6). '0' is block disabled (output low). '1' is block enabled.

For additional information, refer to the CMPCHx_CR register on page 493.

OBSOLETE

31.3.2 CMPBNKx_CR Comparator Control Register

Add.	Name	Bit 7	Bit 6	Bit 5	Bit 4	Bit 3	Bit 2	Bit 1	Bit 0	Access
1,C4h	CMPBNK8_CR					INVERT		HYS_XL	EN	RW : 0
1,C5h	CMPBNK9_CR					INVERT		HYS_XL	EN	RW : 0
1,C6h	CMPBNK10_CR					INVERT		HYS_XL	EN	RW : 0
1,C7h	CMPBNK11_CR					INVERT		HYS_XL	EN	RW : 0
1,C8h	CMPBNK12_CR					INVERT		HYS_XL	EN	RW : 0
1,C9h	CMPBNK13_CR					INVERT		HYS_XL	EN	RW : 0

The Comparator Control Register (CMPBNKx_CR) is used to enable and configure the six comparators in the comparator bank.

Bits [7:4] are reserved and return previous DB bus value upon reset and read operations.

Bit 3: INVERT. Output invert select. ‘0’ is non-invert output. ‘1’ is invert output.

Bit 1: HYS_XL. Hysteresis enable, active low. ‘0’ is hysteresis enabled. ‘1’ is hysteresis disabled.

Bit 0: EN. Block enable signal. ‘0’ is block disabled (output low). ‘1’ is block enabled.

For additional information, refer to the CMPBNKx_CR register on page 494.

OBSOLETE

31.4 Timing Diagrams

Figure 31-4. Comparator Timing Diagram

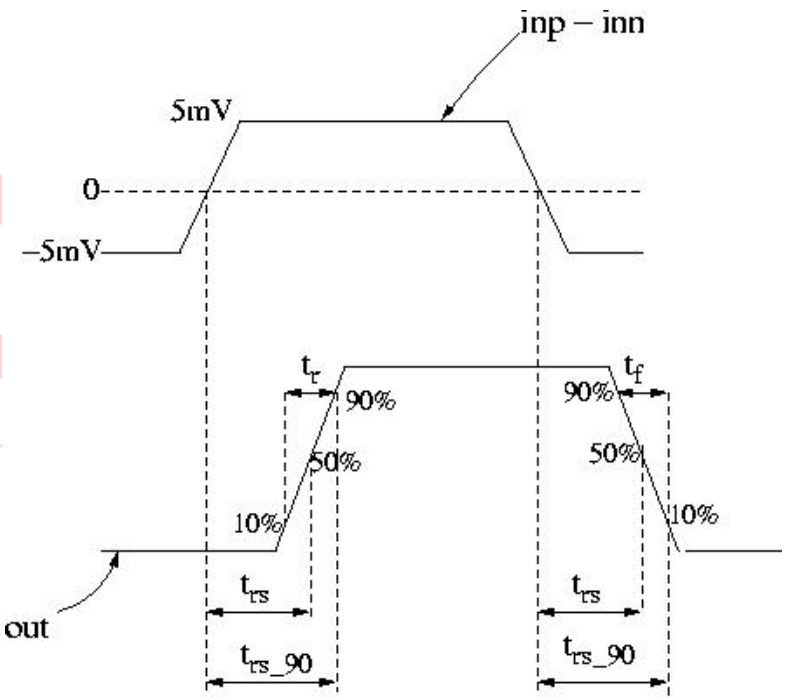

It is shown in Figure 31-4 that the maximum response time of the comparator (trs) is defined as the time period between when the positive input (inp) crosses the negative input (inn) and the output reaches 50% of its final value. The rising/falling time (tr/tf) is defined as the time period the output takes from 10%-90% to 90%-10% of its final value.

OBSOLETE

32. Analog MUX

This chapter explains the Analog MUX and its associated registers. For a complete table of the Analog MUX registers, refer to the “Power Peripherals Register Summary” on page 279. For a quick reference of all PowerPSoC registers in address order, refer to the Register Details chapter on page 361.

32.1 Architectural Description

The PowerPSoC family’s analog MUX is designed to route signals from the CSA output, function I/O pins and the DACs to comparator inputs and the current sense inputs of the hysteretic controllers. Additionally, CSA outputs can be routed to the AINX block. Table 32-1 contains analog mux description. A 1 in the table indicates that the signal on the input column can be propagated to the signal on the output row.

Table 32-1. Logical Representation of Power Peripheral Analog Multiplexer

		Outputs																
		CMP8 NEG INP	CMP9 NEG INP	CMP10 NEG INP	CMP11 NEG INP	CMP12 NEG INP	CMP13 NEG INP	CMP8 POS INP	CMP9 POS INP	CMP10 POS INP	CMP11 POS INP	CMP12 POS INP	CMP13 POS INP	HYST_IFB_0*	HYST_IFB_1*	HYST_IFB_2*	HYST_IFB_3*	A_INX**
Inputs	CSA_OUT0							1	1				1	1				1
	CSA_OUT1								1	1		1			1			1
	CSA_OUT2									1	1		1			1		1
	CSA_OUT3							1			1	1					1	1
	FN0[0]	1			1	1			1	1			1	1				
	FN0[1]	1	1				1	1		1	1				1			
	FN0[2]		1	1		1			1		1	1				1		
	FN0[3]			1	1		1	1				1	1				1	
	DAC8	1																
	DAC9		1															
	DAC10			1														
	DAC11				1													
	DAC12					1												
	DAC13						1											

* Hyst_IFB_x is the current feedback input of the hysteretic controller channel x.

** The AINX signal is the multiplexed output of the current sense amplifier that is routed to the PSoC analog column.

CYPRESS DATA SHEET

Figure 32-1. AINX MUX Connections

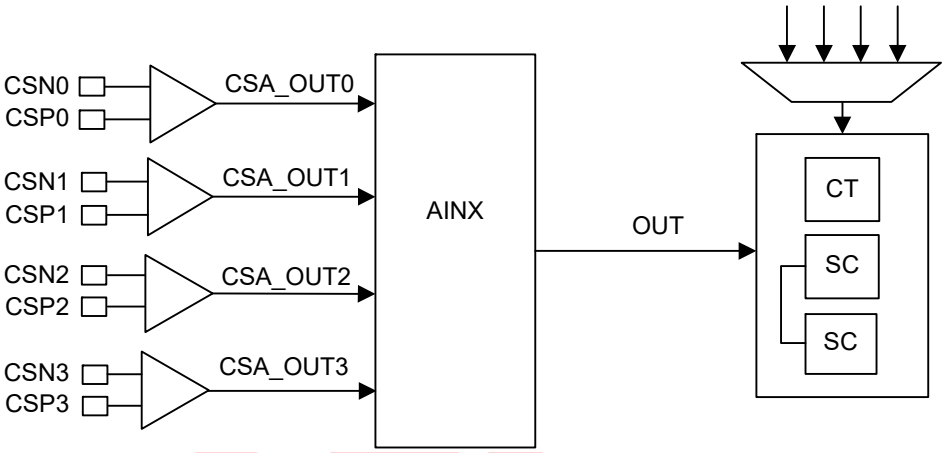

This AINX block provides the capability to route the output of a Current Sense Amplifier to the analog section in the PSoC core. This block takes the output of one of the four CSAs depending on the bits PAMUX_S4[5:4] and buffers this analog signal. For instance, the buffered output can be connected to a switched capacitor block that is configured as an ADC. The current sense amplifier inside this AINX block also isolates the CSA load from the PSoC core.

OBSOLETE

32.2 Register Definitions

The following registers are associated with the Analog MUX sub-system and are listed in address order. Each register description has an associated register table showing the bit structure for that register. For a complete table of Analog MUX registers, refer to the "Power Peripherals Register Summary" on page 279.

The bits that are grayed out throughout this manual are reserved bits and are not detailed in the register descriptions that follow. Reserved bits should always be written with a value of '0'.

32.2.1 PAMUX_S1 Power Analog Mux Select Input Register 1

Add.	Name	Bit 7	Bit 6	Bit 5	Bit 4	Bit 3	Bit 2	Bit 1	Bit 0	Access
0,67h	PAMUX_S1	S3[1:0]		S2[1:0]		S1[1:0]		S0[1:0]		RW : 00

The Power Analog Mux Select Input Register 1 (PAMUX_S1) is used for multiplexing analog inputs from the DAC or GPIO, FN0 to comparator bank inputs.

Bits 7 to 6: S3[1:0].

'00' FN0[0] input is multiplexed to CMP11 NEG INP.
'01' FN0[3] input is multiplexed to CMP11 NEG INP.
'10' DAC_OUT11 input is multiplexed to CMP12 NEG INP.
'11' VSS input is multiplexed to CMP11 NEG INP.

Bits 5 to 4: S2[1:0].

'00' FN0[2] input is multiplexed to CMP10 NEG INP.
'01' FN0[3] input is multiplexed to CMP10 NEG INP.
'10' DAC_OUT10 input is multiplexed to CMP10 NEG INP.
'11' VSS input is multiplexed to CMP10 NEG INP.

Bits 3 to 2: S1[1:0].

'00' FN0[1] input is multiplexed to CMP9 NEG INP.
'01' FN0[2] input is multiplexed to CMP9 NEG INP.
'10' DAC_OUT9 input is multiplexed to CMP9 NEG INP.
'11' VSS input is multiplexed to CMP9 NEG INP.

Bits 1 to 0: S0[1:0].

'00' FN0[0] input is multiplexed to CMP8 NEG INP.
'01' FN0[1] input is multiplexed to CMP8 NEG INP.
'10' DAC_OUT8 input is multiplexed to CMP8 NEG INP.
'11' VSS input is multiplexed to CMP8 NEG INP.

For additional information, refer to the PAMUX_S1 register on page 394.

32.2.2 PAMUX_S2 Power Analog Mux Select Input Register 2

Add.	Name	Bit 7	Bit 6	Bit 5	Bit 4	Bit 3	Bit 2	Bit 1	Bit 0	Access
0,68h	PAMUX_S2	S7[1:0]		S6[1:0]		S5[1:0]		S4[1:0]		RW : 00

The Power Analog Mux Select Input Register 2 (PAMUX_S2) is used for multiplexing analog inputs from the DAC, CSA, or GPIO, FN0 to comparator bank inputs.

Bits 7 to 6: S7[1:0].

'00' CSA_OUT0 input is multiplexed to CMP9 POS INP.
'01' CSA_OUT1 input is multiplexed to CMP9 POS INP.
'10' FN0[0] input is multiplexed to CMP9 POS INP.
'11' FN0[2] input is multiplexed to CMP9 POS INP.

Bits 5 to 4: S6[1:0].

'00' CSA_OUT0 input is multiplexed to CMP8 POS INP.
'01' CSA_OUT3 input is multiplexed to CMP8 POS INP.
'10' FN0[1] input is multiplexed to CMP8 POS INP.
'11' FN0[3] input is multiplexed to CMP8 POS INP.

Bits 3 to 2: S5[1:0].

'00' FN0[1] input is multiplexed to CMP13 NEG INP.
'01' FN0[3] input is multiplexed to CMP13 NEG INP.
'10' DAC_OUT13 input is multiplexed to CMP13 NEG INP.
'11' VSS input is multiplexed to CMP13 NEG INP.

Bits 1 to 0: S4[1:0].

'00' FN0[0] input is multiplexed to CMP12 NEG INP.
'01' FN0[2] input is multiplexed to CMP12 NEG INP.
'10' DAC_OUT12 input is multiplexed to CMP12 NEG INP.
'11' VSS input is multiplexed to CMP12 NEG INP.

For additional information, refer to the PAMUX_S2 register on page 395.

OBSOLETE

32.2.3 PAMUX_S3 Power Analog Mux Select Input Register 3

Add.	Name	Bit 7	Bit 6	Bit 5	Bit 4	Bit 3	Bit 2	Bit 1	Bit 0	Access
0,69h	PAMUX_S3	S11[1:0]		S10[1:0]		S9[1:0]		S8[1:0]		RW : 00

The Power Analog Mux Select Input Register 3 (PAMUX_S3) is used for multiplexing analog inputs from the comparator or GPIO, FN0 to comparator bank inputs.

Bits 7 to 6: S11[1:0].

‘00’ CSA_OUT0 input is multiplexed to CMP13 POS INP.
‘01’ CSA_OUT2 input is multiplexed to CMP13 POS INP.
‘10’ FN0[0] input is multiplexed to CMP13 POS INP.
‘11’ FN0[3] input is multiplexed to CMP13 POS INP.

Bits 5 to 4: S10[1:0].

‘00’ CSA_OUT1 input is multiplexed to CMP12 POS INP.
‘01’ CSA_OUT3 input is multiplexed to CMP12 POS INP.
‘10’ FN0[2] input is multiplexed to CMP12 POS INP.
‘11’ FN0[3] input is multiplexed to CMP12 POS INP.

Bits 3 to 2: S9[1:0].

‘00’ CSA_OUT2 input is multiplexed to CMP11 POS INP.
‘01’ CSA_OUT3 input is multiplexed to CMP11 POS INP.
‘10’ FN0[1] input is multiplexed to CMP11 POS INP.
‘11’ FN0[2] input is multiplexed to CMP11 POS INP.

Bits 1 to 0: S8[1:0].

‘00’ CSA_OUT1 input is multiplexed to CMP10 POS INP.
‘01’ CSA_OUT2 input is multiplexed to CMP10 POS INP.
‘10’ FN0[0] input is multiplexed to CMP10 POS INP.
‘11’ FN0[1] input is multiplexed to CMP10 POS INP.

For additional information, refer to the PAMUX_S3 register on page 396.

32.2.4 PAMUX_S4 Power Analog Mux Select Input Register 4

Add.	Name	Bit 7	Bit 6	Bit 5	Bit 4	Bit 3	Bit 2	Bit 1	Bit 0	Access
0,6Ah	PAMUX_S4			S16[1:0]		S15	S14	S13	S12	RW : 00

The Power Analog Mux Select Input Register 4 (PAMUX_S4) is used for multiplexing analog inputs from CSA or GPIO, FN0 to the hysteretic controller and AINX block.

Bits 5 to 4: S16[1:0].

‘00’ CSA_OUT0 input is multiplexed to AINX.
‘01’ CSA_OUT1 input is multiplexed to AINX.
‘10’ CSA_OUT2 input is multiplexed to AINX.
‘11’ CSA_OUT3 input is multiplexed to AINX.

Bit 3: S15. ‘0’ is CSA_OUT3 input is multiplexed to HYST_IFB_3. ‘1’ is FN0[3] input is multiplexed to HYST_IFB_3.

Bit 2: S14. ‘0’ is CSA_OUT2 input is multiplexed to HYST_IFB_2. ‘1’ is FN0[2] input is multiplexed to HYST_IFB_2.

Bit 1: S13. ‘0’ is CSA_OUT1 input is multiplexed to HYST_IFB_1. ‘1’ is FN0[1] input is multiplexed to HYST_IFB_1.

Bit 0: S12. ‘0’ is CSA_OUT0 input is multiplexed to HYST_IFB_0. ‘1’ is FN0[0] input is multiplexed to HYST_IFB_0.

For additional information, refer to the PAMUX_S4 register on page 397.

OBSOLETE

33. Digital MUX

This chapter explains the Digital MUX and its associated registers. For a complete table of the Digital MUX registers, refer to the "Power Peripherals Register Summary" on page 279. For a quick reference of all PowerPSoC registers in address order, refer to the Register Details chapter on page 361.

33.1 Architectural Description

The PowerPSoC family's digital MUX is a configurable switching matrix that connects the power peripheral digital resources. This Power Peripheral Digital Multiplexer is independent of the main PSoC digital buses/global of the PSoC Core, on page 39.

A 1 in the table indicates that the signal on the input column can be propagated to the signal on the output row.

Table 33-1. Logical Representation of Power Peripheral Digital Multiplexer

		Outputs											
		HYST_Dim0*	HYST_Dim1*	HYST_Dim2*	HYST_Dim3*	HYST_Trip0**	HYST_Trip1**	HYST_Trip2**	HYST_Trip3**	FN0[0]	FN0[1]	FN0[2]	FN0[3]
Inputs	CMP_out8					1	1	1	1	1	1	1	1
	CMP_out9					1	1	1	1	1	1	1	1
	CMP_out10					1	1	1	1	1	1	1	1
	CMP_out11					1	1	1	1	1	1	1	1
	CMP_out12					1	1	1	1	1	1	1	1
	CMP_out13					1	1	1	1	1	1	1	1
	DPWM_OUTO	1	1	1	1					1	1	1	1
	DPWM_OUT1	1	1	1	1					1	1	1	1
	DPWM_OUT2	1	1	1	1					1	1	1	1
	DPWM_OUT3	1	1	1	1					1	1	1	1
	FN0[0]	1	1	1	1	1	1	1	1				
	FN0[1]	1	1	1	1	1	1	1	1				
	FN0[2]	1	1	1	1	1	1	1	1				
	FN0[3]	1	1	1	1	1	1	1	1				

* HYST_Dimx is the modulation signal input to the hysteretic controller block.

** The HYST_Tripx signal is used as the trip input to the hysteretic controller from the bank comparator or FN0 through the power peripheral digital multiplexer.

DPWM_OUTx is the output of the digital modulator block.

33.1.1 Digital Muxes to Hysteretic Channel

All the digital muxes connected to the hysteretic channel trip and dim signals are described here. The details on trip and dim signals are presented in the Hysteretic Controller chapter on page 313. The register definitions shown in Figure 33-1 are presented in "Register Definitions" on page 308.

Figure 33-1. Digital Muxes Connected to Hysteretic Channel

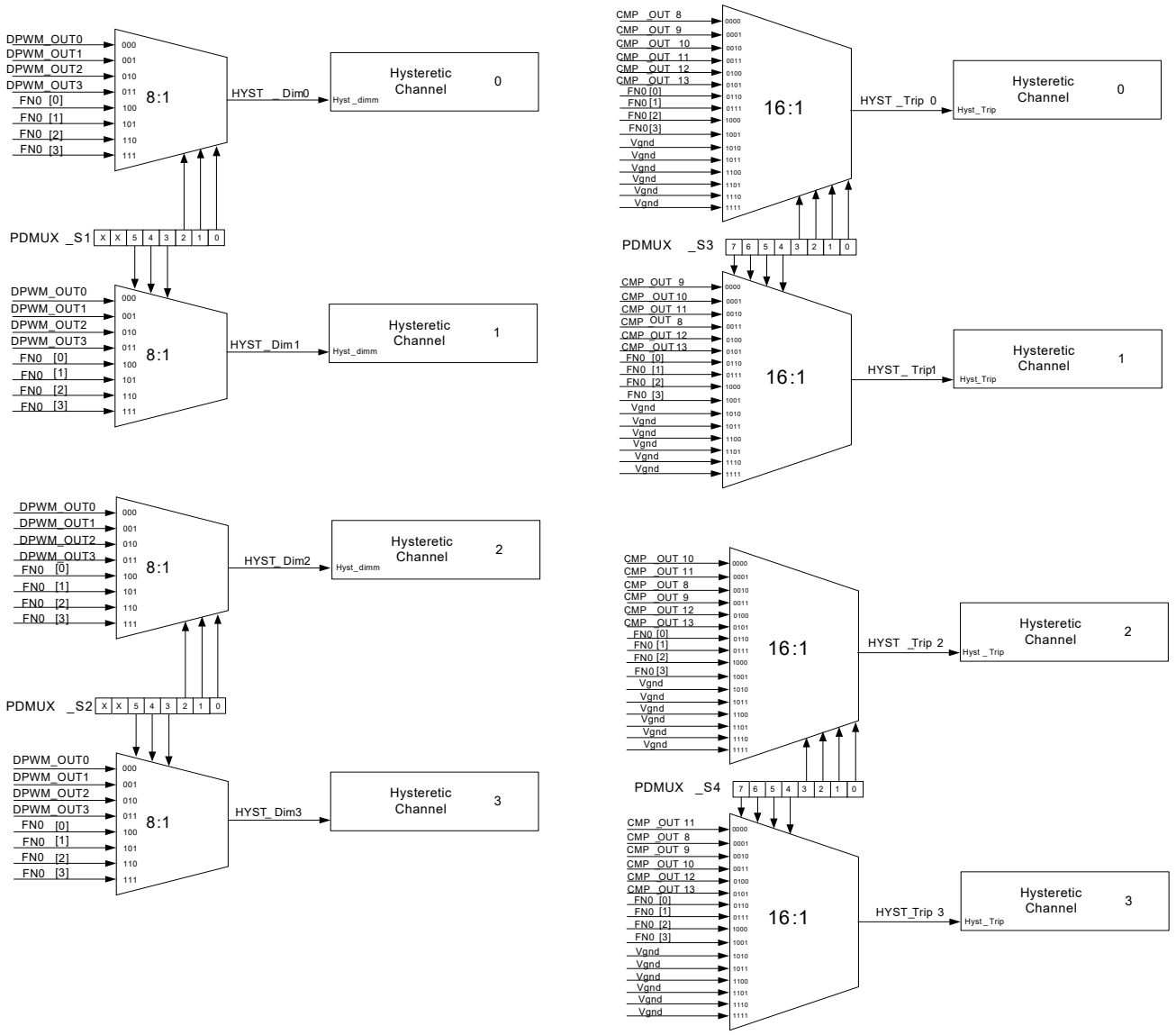

The DPWM_OUTx's in Figure 33-1 are output of the digital modulator blocks going to the hysteretic controller via the muxes.

33.1.2 Digital Muxes to Function I/O

All the digital muxes connected to GPIO (digital input pin) are described here. The register definitions shown in Figure 33-2 are presented in “Register Definitions” on page 308.

Figure 33-2. Digital Muxes Connected to GPIO

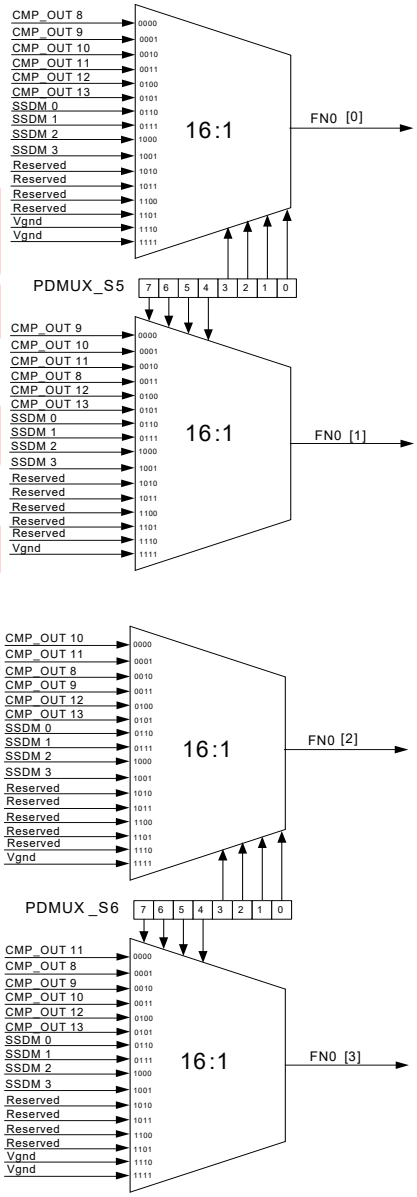

OBSOLETE

33.2 Register Definitions

The following registers are associated with the Digital MUX sub-system and are listed in address order. Each register description has an associated register table showing the bit structure for that register. For a complete table of Digital MUX registers, refer to the “Power Peripherals Register Summary” on page 279.

The bits that are grayed out throughout this manual are reserved bits and are not detailed in the register descriptions that follow. Reserved bits should always be written with a value of ‘0’.

33.2.1 PDMUX_S1 Power Digital Mux Select Register 1

Add.	Name	Bit 7	Bit 6	Bit 5	Bit 4	Bit 3	Bit 2	Bit 1	Bit 0	Access
0,18h	PDMUX_S1			HYST_DIM1[2:0]			HYST_DIM0[2:0]			RW : 00

The Power Digital Mux Select Register 1 (PDMUX_S1) is used to multiplex various digital inputs (coming out of the DPWM block or GPIO port, FN0) onto dimming input of hysteretic controller channel 0 and channel 1. Details are provided in the Hysteretic Controller chapter on page 313.

Bits 5 to 3: HYST_DIM1[2:0].

‘000’ is DPWM_OUT1 input is multiplexed to Output HYST_DIM1.
‘001’ is DPWM_OUT2 input is multiplexed to Output HYST_DIM1.
‘010’ is DPWM_OUT3 input is multiplexed to Output HYST_DIM1.
‘011’ is DPWM_OUT0 input is multiplexed to Output HYST_DIM1.
‘100’ is FN0[0] input is multiplexed to Output HYST_DIM1.
‘101’ is FN0[1] input is multiplexed to Output HYST_DIM1.
‘110’ is FN0[2] input is multiplexed to Output HYST_DIM1.
‘111’ is FN0[3] input is multiplexed to Output HYST_DIM1.

Bits 2 to 0: HYST_DIM0[2:0].

‘000’ is DPWM_OUT0 input is multiplexed to Output HYST_DIM0.
‘001’ is DPWM_OUT1 input is multiplexed to Output HYST_DIM0.
‘010’ is DPWM_OUT2 input is multiplexed to Output HYST_DIM0.
‘011’ is DPWM_OUT3 input is multiplexed to Output HYST_DIM0.
‘100’ is FN0[0] input is multiplexed to Output HYST_DIM0.
‘101’ is FN0[1] input is multiplexed to Output HYST_DIM0.
‘110’ is FN0[2] input is multiplexed to Output HYST_DIM0.
‘111’ is FN0[3] input is multiplexed to Output HYST_DIM0.

For additional information, refer to the PDMUX_S1 register on page 367.

OBSOLETE

33.2.2 PDMUX_S2 Power Digital Mux Select Register 2

Add.	Name	Bit 7	Bit 6	Bit 5	Bit 4	Bit 3	Bit 2	Bit 1	Bit 0	Access
0,19h	PDMUX_S2			HYST_DIM3[2:0]			HYST_DIM2[2:0]			RW : 00

The Power Digital Mux Select Register 2 (PDMUX_S2) is used to multiplex various digital inputs (coming out of the DPWM block or GPIO port, FN0) onto dimming input of hysteretic controller channel 2 and channel 3. Details are provided in the Hysteretic Controller chapter on page 313.

Bits 5 to 3: HYST_DIM3[2:0].

‘000’ is DPWM_OUT3 input is multiplexed to Output HYST_DIM3.
‘001’ is DPWM_OUT0 input is multiplexed to Output HYST_DIM3.
‘010’ is DPWM_OUT1 input is multiplexed to Output HYST_DIM3.
‘011’ is DPWM_OUT2 input is multiplexed to Output HYST_DIM3.
‘100’ is FN0[0] input is multiplexed to Output HYST_DIM3.
‘101’ is FN0[1] input is multiplexed to Output HYST_DIM3.
‘110’ is FN0[2] input is multiplexed to Output HYST_DIM3.
‘111’ is FN0[3] input is multiplexed to Output HYST_DIM3.

Bits 2 to 0: HYST_DIM2[2:0].

‘000’ is DPWM_OUT2 input is multiplexed to Output HYST_DIM2.
‘001’ is DPWM_OUT3 input is multiplexed to Output HYST_DIM2.
‘010’ is DPWM_OUT0 input is multiplexed to Output HYST_DIM2.
‘011’ is DPWM_OUT1 input is multiplexed to Output HYST_DIM2.
‘100’ is FN0[0] input is multiplexed to Output HYST_DIM2.
‘101’ is FN0[1] input is multiplexed to Output HYST_DIM2.
‘110’ is FN0[2] input is multiplexed to Output HYST_DIM2.
‘111’ is FN0[3] input is multiplexed to Output HYST_DIM2.

For additional information, refer to the PDMUX_S2 register on page 368.

33.2.3 PDMUX_S3 Power Digital Mux Select Register 3

Add.	Name	Bit 7	Bit 6	Bit 5	Bit 4	Bit 3	Bit 2	Bit 1	Bit 0	Access
0,1Ah	PDMUX_S3	HYST_TRIP1[3:0]				HYST_TRIP0[3:0]				RW : 00

The Power Digital Mux Select Register 3 (PDMUX_S3) is used to multiplex various digital inputs (coming out of the comparator bank or GPIO port, FN0) onto trip input of hysteretic controller channel 0 and channel 1. Details are provided in the Hysteretic Controller chapter on page 313.

Bits 7 to 4: HYST_TRIP1[3:0].

‘0000’ is CMP_OUT9 input multiplexed to HYST_TRIP1.
‘0001’ is CMP_OUT10 input multiplexed to HYST_TRIP1.
‘0010’ is CMP_OUT11 input multiplexed to HYST_TRIP1.
‘0011’ is CMP_OUT8 input multiplexed to HYST_TRIP1.
‘0100’ is CMP_OUT12 input multiplexed to HYST_TRIP1.
‘0101’ is CMP_OUT13 input multiplexed to HYST_TRIP1.
‘0110’ is FN0[0] input multiplexed to HYST_TRIP1.
‘0111’ is FN0[1] input multiplexed to HYST_TRIP1.
‘1000’ is FN0[2] input multiplexed to HYST_TRIP1.
‘1001’ is FN0[3] input multiplexed to HYST_TRIP1.

‘1010’ to ‘1111’ -- Tied to Vgnd.

Bits 3 to 0: HYST_TRIP0[3:0].

‘0000’ is CMP_OUT8 input multiplexed to HYST_TRIP0.
‘0001’ is CMP_OUT9 input multiplexed to HYST_TRIP0.
‘0010’ is CMP_OUT10 input multiplexed to HYST_TRIP0.
‘0011’ is CMP_OUT11 input multiplexed to HYST_TRIP0.
‘0100’ is CMP_OUT12 input multiplexed to HYST_TRIP0.
‘0101’ is CMP_OUT13 input multiplexed to HYST_TRIP0.
‘0110’ is FN0[0] input multiplexed to HYST_TRIP0.
‘0111’ is FN0[1] input multiplexed to HYST_TRIP0.
‘1000’ is FN0[2] input multiplexed to HYST_TRIP0.
‘1001’ is FN0[3] input multiplexed to HYST_TRIP0.

‘1010’ to ‘1111’ -- Tied to Vgnd.

For additional information, refer to the PDMUX_S3 register on page 369.

OBSOLETE

33.2.4 PDMUX_S4 Power Digital Mux Select Register 4

Add.	Name	Bit 7	Bit 6	Bit 5	Bit 4	Bit 3	Bit 2	Bit 1	Bit 0	Access
0,1Bh	PDMUX_S4	HYST_TRIP3[3:0]				HYST_TRIP2[3:0]				RW : 00

The Power Digital Mux Select Register 4 (PDMUX_S4) is used to multiplex various digital inputs (coming out of the comparator bank or GPIO port, FN0) onto trip input of hysteretic controller channel 2 and channel 3. Details are provided in the Hysteretic Controller chapter on page 313.

Bits 7 to 4: HYST_TRIP3[3:0].

‘0000’ is CMP_OUT11 input multiplexed to HYST_TRIP3.
‘0001’ is CMP_OUT8 input multiplexed to HYST_TRIP3.
‘0010’ is CMP_OUT9 input multiplexed to HYST_TRIP3.
‘0011’ is CMP_OUT10 input multiplexed to HYST_TRIP3.
‘0100’ is CMP_OUT12 input multiplexed to HYST_TRIP3.
‘0101’ is CMP_OUT13 input multiplexed to HYST_TRIP3.
‘0110’ is FN0[0] input multiplexed to HYST_TRIP3.
‘0111’ is FN0[1] input multiplexed to HYST_TRIP3.
‘1000’ is FN0[2] input multiplexed to HYST_TRIP3.
‘1001’ is FN0[3] input multiplexed to HYST_TRIP3.

‘1010’ to ‘1111’ -- Tied to Vgnd.

Bits 3 to 0: HYST_TRIP2[3:0].

‘0000’ is CMP_OUT10 input multiplexed to HYST_TRIP2.
‘0001’ is CMP_OUT11 input multiplexed to HYST_TRIP2.
‘0010’ is CMP_OUT8 input multiplexed to HYST_TRIP2.
‘0011’ is CMP_OUT9 input multiplexed to HYST_TRIP2.
‘0100’ is CMP_OUT12 input multiplexed to HYST_TRIP2.
‘0101’ is CMP_OUT13 input multiplexed to HYST_TRIP2.
‘0110’ is FN0[0] input multiplexed to HYST_TRIP2.
‘0111’ is FN0[1] input multiplexed to HYST_TRIP2.
‘1000’ is FN0[2] input multiplexed to HYST_TRIP2.
‘1001’ is FN0[3] input multiplexed to HYST_TRIP2.

‘1010’ to ‘1111’ -- Tied to Vgnd.

For additional information, refer to the PDMUX_S4 register on page 370.

OBSOLETE

33.2.5 PDMUX_S5 Power Digital Mux Select Register 5

Add.	Name	Bit 7	Bit 6	Bit 5	Bit 4	Bit 3	Bit 2	Bit 1	Bit 0	Access
0,1Ch	PDMUX_S5	GPIO1_SEL[3:0]				GPIO0_SEL[3:0]				RW : 00

The Power Digital Mux Select Register 5 (PDMUX_S5) is used to multiplex various digital inputs (coming out of the comparator bank or DPWM) onto the GPIO port, FN0.

Bits 7 to 4: GPIO1_SEL[3:0].

‘0000’ is CMP_OUT9 input multiplexed to FN0[1].
‘0001’ is CMP_OUT10 input multiplexed to FN0[1].
‘0010’ is CMP_OUT11 input multiplexed to FN0[1].
‘0011’ is CMP_OUT8 input multiplexed to FN0[1].
‘0100’ is CMP_OUT12 input multiplexed to FN0[1].
‘0101’ is CMP_OUT13 input multiplexed to FN0[1].
‘0110’ is DPWM_OUT0 input multiplexed to FN0[1].
‘0111’ is DPWM_OUT1 input multiplexed to FN0[1].
‘1000’ is DPWM_OUT2 input multiplexed to FN0[1].
‘1001’ is DPWM_OUT3 input multiplexed to FN0[1].
1010’ is Reserved.
‘1011’ is Reserved.
‘1100’ is Reserved.
‘1101’ is Reserved.
‘1110’ is Reserved.

‘1111’ -- Tied to Vgnd.

Bits 3 to 0: GPIO0_SEL[3:0].

‘0000’ is CMP_OUT8 input multiplexed to FN0[0].
‘0001’ is CMP_OUT9 input multiplexed to FN0[0].
‘0010’ is CMP_OUT10 input multiplexed to FN0[0].
‘0011’ is CMP_OUT11 input multiplexed to FN0[0].
‘0100’ is CMP_OUT12 input multiplexed to FN0[0].
‘0101’ is CMP_OUT13 input multiplexed to FN0[0].
‘0110’ is DPWM_OUT0 input multiplexed to FN0[0].
‘0111’ is DPWM_OUT1 input multiplexed to FN0[0].
‘1000’ is DPWM_OUT2 input multiplexed to FN0[0].
‘1001’ is DPWM_OUT3 input multiplexed to FN0[0].
‘1010’ is Reserved.
‘1011’ is Reserved.
‘1100’ is Reserved.
‘1101’ is Reserved.

‘1110 and ‘1111’ -- Tied to Vgnd.

For additional information, refer to the PDMUX_S5 register on page 371.

OBSOLETE

33.2.6 PDMUX_S6 Power Digital Mux Select Register 6

Add.	Name	Bit 7	Bit 6	Bit 5	Bit 4	Bit 3	Bit 2	Bit 1	Bit 0	Access
0,1Dh	PDMUX_S6	GPIO3_SEL[3:0]				GPIO2_SEL[3:0]				RW : 00

The Power Digital Mux Select Register 6 (PDMUX_S6) is used to multiplex various digital inputs (coming out of the comparator bank or DPWM) onto the GPIO port, FN0.

Bits 7 to 4: GPIO3_SEL[3:0].

‘0000’ is CMP_OUT11 input multiplexed to FN0[3].
‘0001’ is CMP_OUT8 input multiplexed to FN0[3].
‘0010’ is CMP_OUT9 input multiplexed to FN0[3].
‘0011’ is CMP_OUT10 input multiplexed to FN0[3].
‘0100’ is CMP_OUT12 input multiplexed to FN0[3].
‘0101’ is CMP_OUT13 input multiplexed to FN0[3].
‘0110’ is DPWM_OUT0 input multiplexed to FN0[3].
‘0111’ is DPWM_OUT1 input multiplexed to FN0[3].
‘1000’ is DPWM_OUT2 input multiplexed to FN0[3].
‘1001’ is DPWM_OUT3 input multiplexed to FN0[3].
1010’ is Reserved.
‘1011’ is Reserved.
‘1100’ is Reserved.
‘1101’ is Reserved.

‘1110’ to ‘1111’ -- Tied to Vgnd.

Bits 3 to 0: GPIO2_SEL[3:0].

‘0000’ is CMP_OUT10 input multiplexed to FN0[2].
‘0001’ is CMP_OUT11 input multiplexed to FN0[2].
‘0010’ is CMP_OUT8 input multiplexed to FN0[2].
‘0011’ is CMP_OUT9 input multiplexed to FN0[2].
‘0100’ is CMP_OUT12 input multiplexed to FN0[2].
‘0101’ is CMP_OUT13 input multiplexed to FN0[2].
‘0110’ is DPWM_OUT0 input multiplexed to FN0[2].
‘0111’ is DPWM_OUT1 input multiplexed to FN0[2].
‘1000’ is DPWM_OUT2 input multiplexed to FN0[2].
‘1001’ is DPWM_OUT3 input multiplexed to FN0[2].
‘1010’ is Reserved.
‘1011’ is Reserved.
‘1100’ is Reserved.
‘1101’ is Reserved.
‘1110’ is Reserved.

‘1111’ -- Tied to Vgnd.

For additional information, refer to the PDMUX_S6 register on page 372.

OBSOLETE

34. Hysteretic Controller

This chapter explains the Hysteretic Controller (and its associated registers. For a complete table of the Hysteretic Controller registers, refer to the “Power Peripherals Register Summary” on page 279. For a quick reference of all PowerPSoC registers in address order, refer to the Register Details chapter on page 361.

Figure 34-1shows the role and position of the hysteretic controller (highlighted) in the entire power peripherals system. The power peripherals have been configured to drive LEDs in a floating load buck configuration using the internal FET with digital modulation and trip protection. The hysteretic controller acts on the current feedback, the modulation signal, and the trip signal to activate the gate driver accordingly.

Figure 34-1. Block Diagram Highlighting the Hysteretic Controller

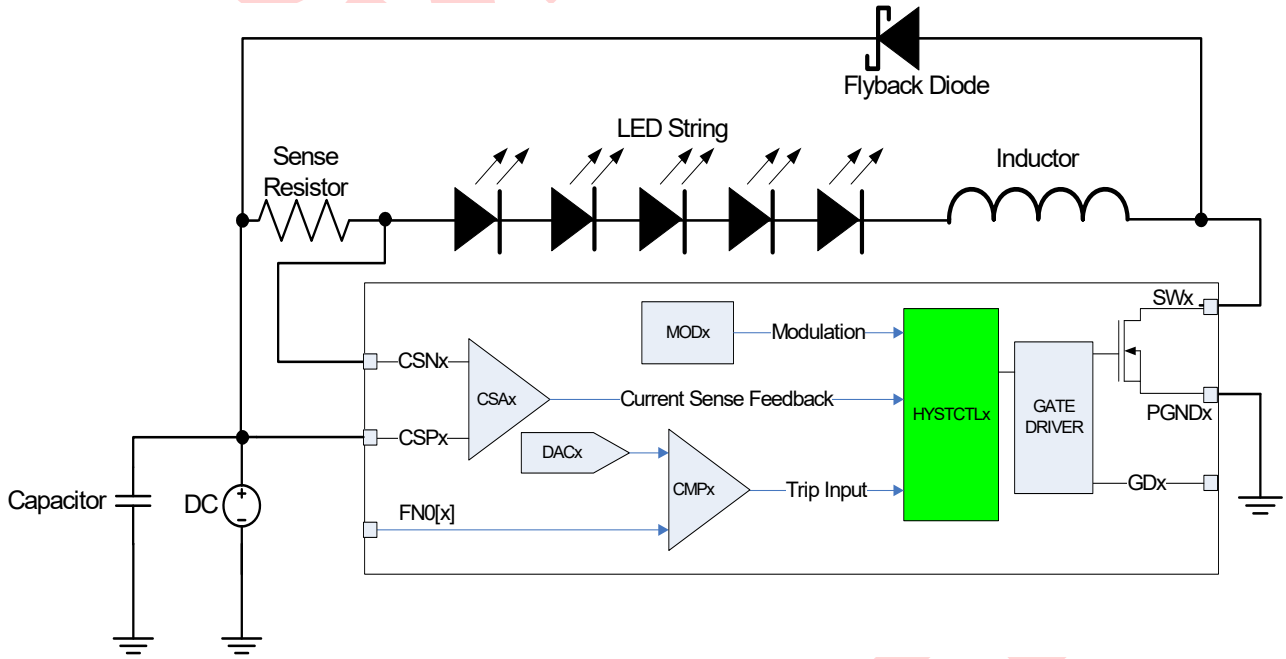

34.1 Architectural Description

The CY8CLED0xx0x PowerPSoC device hysteretic control loop consists of two comparators, two timers, and logic configured.

The hysteretic output goes through a gate driver and controls the FET device shown in Figure 34-3 through the PWM signal.

34.1.1 Circuit Operation

Circuit operation is governed by three functions of the hysteretic controller:

1. Main Loop Function
2. DIM Function
3. Trip Function

34.1.1.1 Main Loop Function

The main loop function consists of the comparators, ON/OFF timers, SR latch, and logic.

V_{SENSE} from Figure 34-3 is fed to at the current sense amplifier whose output is the V_{FB} signal. The comparators compare the voltage to references REF_A (low voltage limit) and REF_B (high voltage limit) and decide to set or reset the latch depending on whether the V_{FB} is below or above the references, respectively.

The timers are retriggerable monoshots that are triggered at the rising edge of the input. They re-trigger at every rising edge. The timers lock the state of the output for a short period of time and are designed to prevent high frequencies from reaching the output, which could cause oscillations in the hysteretic loop. The monoshot timers have a 2-bit programmable delay setting. “Register Definitions” on page 318 outlines the delays output by the timers by programming the HYSCTLRx_CR Hysteretic Controller Configuration Register 1.

A timing diagram of the main loop is shown in Figure 34-5. Following are the signal descriptions:

Table 34-1. Main Loop Signal Descriptions

Signal	Description
REF_A	Low reference voltage
REF_B	High reference voltage
VFB	CSA output voltage
HYST_OUT	Hysteretic Controller output (to gate driver)
HCset	Set input of SR latch
HCrst	Reset input of SR latch
COMPA	REF_A comparator output
ON TIMER	Monoshot ON timer
COMPB	REF_B comparator output
OFF TIMER	Monoshot OFF timer

OBSOLETE

Hysteretic controller main circuit operation is as follows (see Figure 34-2, and Figure 34-5 for loop, and timing diagram):

Figure 34-2. Hysteretic Controller Loop

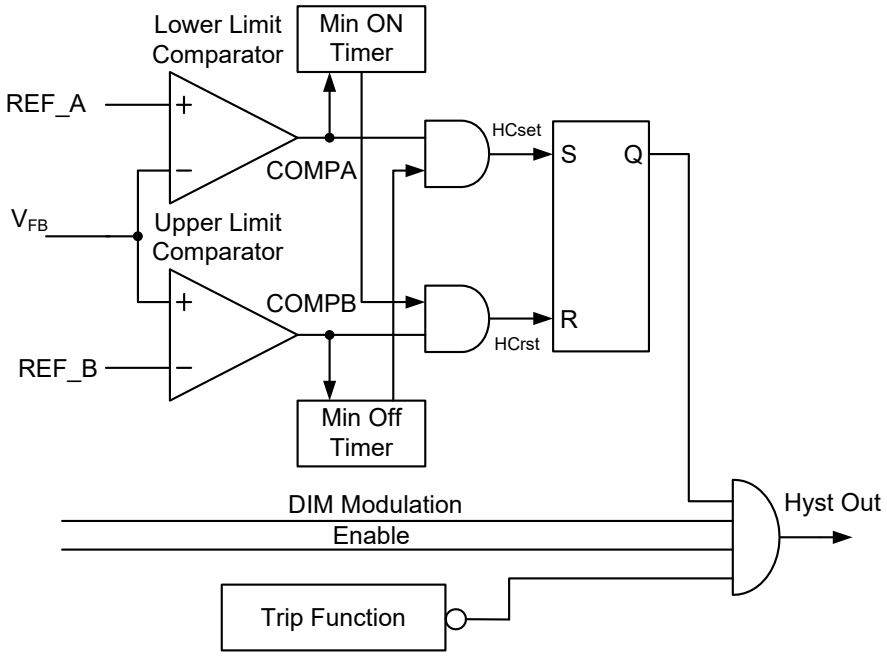

The hysteretic controller main circuit loop is defined as the path from the voltage across the sense resistor V_{FB} (through the Current Sense Amplifier), the high and low limit comparators, the SR latch, the gate driver and the FET.

1. When the FET is ON, the current through the load increases, which results in an increase in the voltage across the sense resistor VFB.
2. When VFB crosses the upper limit REF_B, the comparator output COMPB goes high. This leads to two events.
   a. The Reset signal to the SR latch 'HCrst' goes high resulting in the gate driver getting turned OFF.
   b. It also causes the OFF timer pulse to be generated. This pulse ensures that the SR latch does not get set again within the duration of the pulse.
3. When the FET is OFF, the current through the load decreases, which results in a decrease in the voltage across the sense resistor VFB.
4. When VFB (amplified by the CSA) crosses the lower limit REF_A, the comparator output COMPA goes high. This leads to two events.
   a. The Set signal to the SR latch 'HCset' goes high resulting in the gate driver getting turned ON.
   b. It also causes the ON timer pulse to be generated. This pulse ensures that the latch does not get reset again within the duration of the pulse.
5. The ON and OFF timer pulses prevent very high frequency switching of the FET preventing damage to it.

34.1.1.2 DIM Function

The DIM signal is a separate input feeding the gate driver AND gate (or HYST_OUT driven AND gate). The DIM function is a modulated waveform that implements LED dimming by overriding the main hysteretic control loop. See Figure 34-4 for an illustration. The DIM signal can take the following modulation forms:

1. PrISM (Precision Illumination Signal Modulation)
2. DMM (Delta Sigma Modulation)
3. PWM (Pulse Width Modulation)

The DIM signal comes from the internal digital block. In the hysteretic controller it is simply ANDed with the main loop output.

34.1.1.3 Trip Function

The trip function can be generated from the comparator bank through a digital mux. Trip, like DIM, overrides normal hysteretic controller main loop operation. TRIP is an active high signal into the hysteretic controller. The controller will immediately be disabled in the event of its TRIP input transitioning to logic high. Refer to Figure 34-2 on page 315. It is useful in notifying the hysteretic controller of fault conditions and disabling it to prevent damage to the device and/or the system. Typical fault conditions are over-voltage and over-temperature.

Hysteretic controller Trip circuit operation is described as follows:

1. The input to the TRIP signal of the hysteretic controller can be connected to the output of any of the six hardware comparators, to a function pin, or to VSS. Connecting to VSS will disable TRIP functionality.
2. When the signal that is fed to the TRIP input transitions to logic high, the HYST_CREG bit gets reset and the hysteretic controller gets disabled, and ceases to function immediately. The gate driver turns the FET off at this point.
3. Once the fault condition is removed, to re-start the hysteretic controller, the HYST_CREG bit must be set again.
4. Setting the HYST_CREG bit while the fault condition is present (TRIP signal is still logic high) will cause the hysteretic controller to remain disabled. This is important to note when implementing under-voltage lockout, or an automatic intelligent re-start after a fault condition.
5. There are two bits that must be set in the HYSCTRLx_CR register for the hysteretic controller to function normally. Apart from setting Bit 0 (enable), bit 1 (HYST_CREG) also must be set for the hysteretic controller to turn ON.

OBSOLETE

34.2 Application Description

The application is an intelligent LED controller for high brightness LEDs. The hysteretic control block generates the signal (PWM in Figure 34-3) that drives the NFET (Q1) (through a gate driver block). The circuit uses HV supplies and can drive up to 8 LEDs. The fly-back diode, sense resistor, and inductor are all external components.

Figure 34-3. Intelligent LED Controller Application

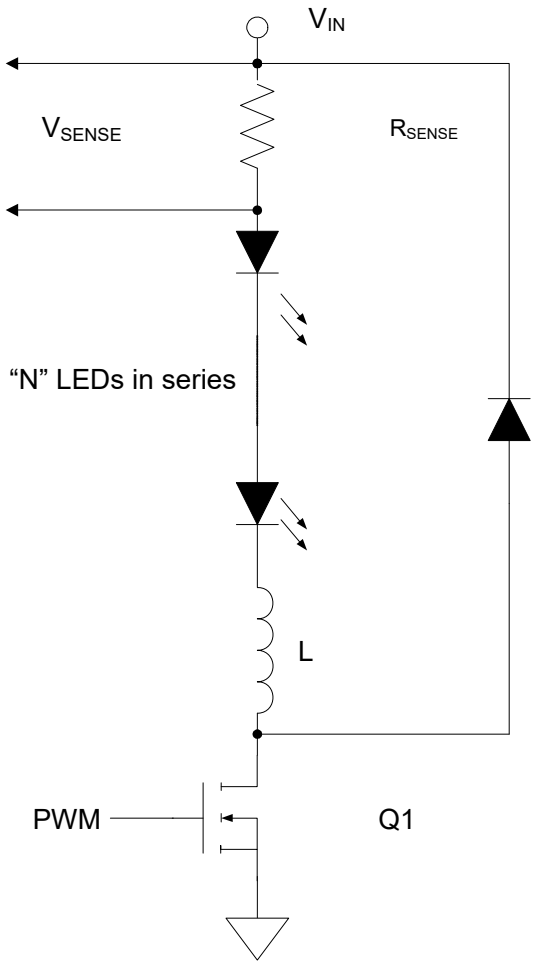

34.2.1 Circuit Operation

With the NFET switch on, the presence of the inductor causes the current through the LEDs to ramp up. When it reaches an upper limit (REF_B), the hysteretic controller turns off the NFET. The hysteretic control input is sensed through resistor R_{SENSE}. With the NFET OFF, the inductor tries to maintain the current through the loop and forces current through the fly-back diode, reversing the voltage polarity across the inductor. The reverse voltage across the inductor causes the current through the inductor to ramp down. When it reaches a low limit (REF_A), the hysteretic controller turns the NFET switch ON again. A sawtooth current profile through the LEDs and inductor is generated by this mechanism.

OBSOLETE

See Figure 34-4 for waveforms. The DIM waveform turns the switch off to control brightness (dimming) and is independent of the hysteretic control loop.

Figure 34-4. Current Waveforms Caused by Hysteretic Control

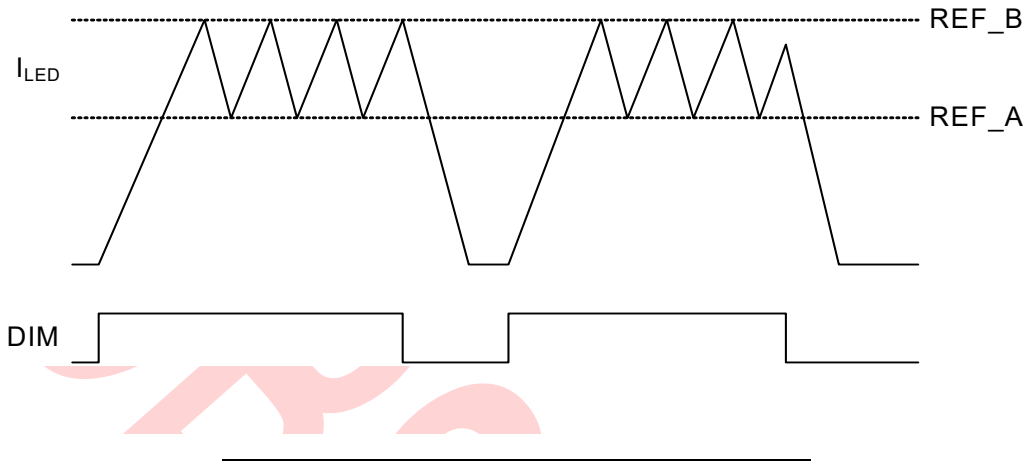

34.3 Register Definitions

The Hysteretic Controller (Hysteretic Controller) uses two registers in addition to four registers for the Comparator IP block (two comparator instances). The new register is defined here. Each register description has an associated register table showing the bit structure for that register. For a complete table of Hysteretic Controller registers, refer to the "Power Peripherals Register Summary" on page 279.

The bits that are grayed out throughout this manual are reserved bits and are not detailed in the register descriptions that follow. Reserved bits should always be written with a value of '0'.

34.3.1 HYSCTLRx_CR Hysteretic Controller Configuration Register 1

Add.	Name	Bit 7	Bit 6	Bit 5	Bit 4	Bit 3	Bit 2	Bit 1	Bit 0	Access
1,D4h	HYSCTLR0_CR					MONOSHOT[1:0]		HYST_CREG	EN	# : 0
1,D5h	HYSCTLR1_CR					MONOSHOT[1:0]		HYST_CREG	EN	# : 0
1,D6h	HYSCTLR2_CR					MONOSHOT[1:0]		HYST_CREG	EN	# : 0
1,D7h	HYSCTLR3_CR					MONOSHOT[1:0]		HYST_CREG	EN	# : 0

The Hysteretic Controller Configuration Register (HYSCTLRx_CR) is used for hysteretic controller configuration.

Bits 3 to 2: MONOSHOT[1:0]. Two-bit monoshot programmability.

'00' is 10-30 ns (monostable) timer delay for both ON and OFF timers.

'01' is 20-60 ns (monostable) timer delay for both ON and OFF timers.

'10' is 40-110 ns (monostable) timer delay for both ON and OFF timers.

'11' is no delay from both timers.

Bit 1: HYST_CREG. Write '1' to enable (default) hysteretic controller either after power up or after a shutdown event.

Note The HYST_CREG bit is a Write Only access bit.

Bit 0: EN. Hysteretic Controller enable signal.

'0' is hysteretic controller disabled.

'1' is hysteretic controller enabled.

For additional information, refer to the HYSCTLRx_CR register on page 499.

34.4 Timing Diagrams

Figure 34-5. Timing Diagram of Main Loop of Hysteretic Controller

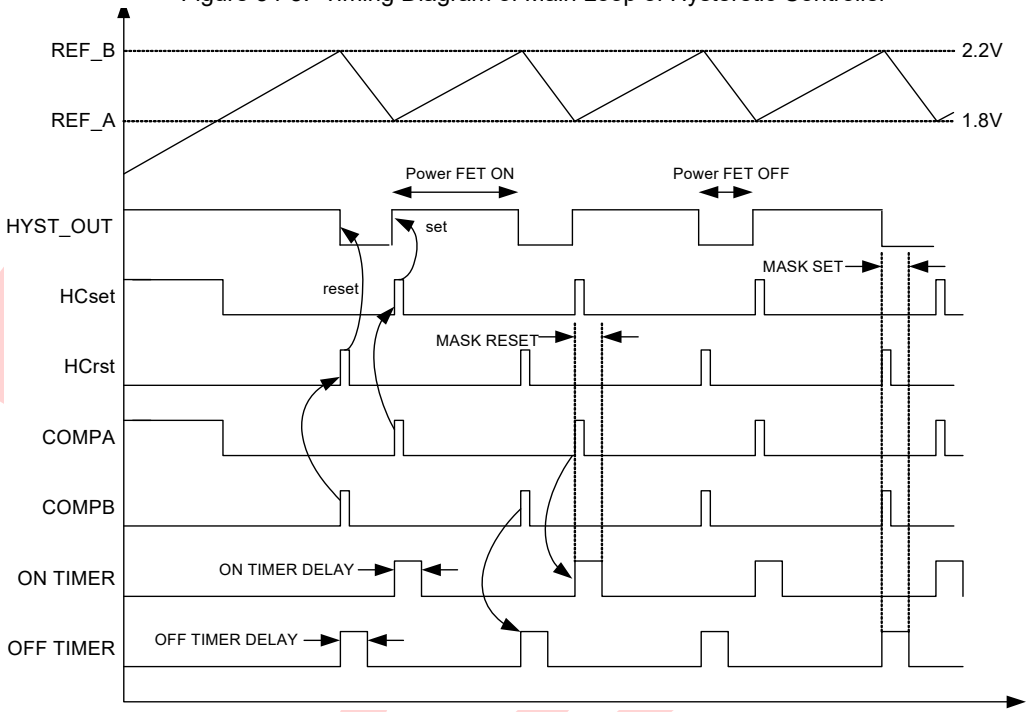

OBSOLETE

OBSOLETE

35. Digital Modulator

This chapter explains the Digital Modulator Block and its associated registers. For a complete table of the Digital Modulator registers, refer to the “Power Peripherals Register Summary” on page 279. For a quick reference of all PowerPSoC registers in address order, refer to the Register Details chapter on page 361.

Figure 35-1shows the role and position of the digital modulator (highlighted) in the entire power peripherals system. The power peripherals have been configured to drive LEDs in a floating load buck configuration using the internal FET with digital modulation and trip protection. The digital modulator provides the dimming signals to the hysteretic controller.

Figure 35-1. Block Diagram Highlighting the Digital Modulator

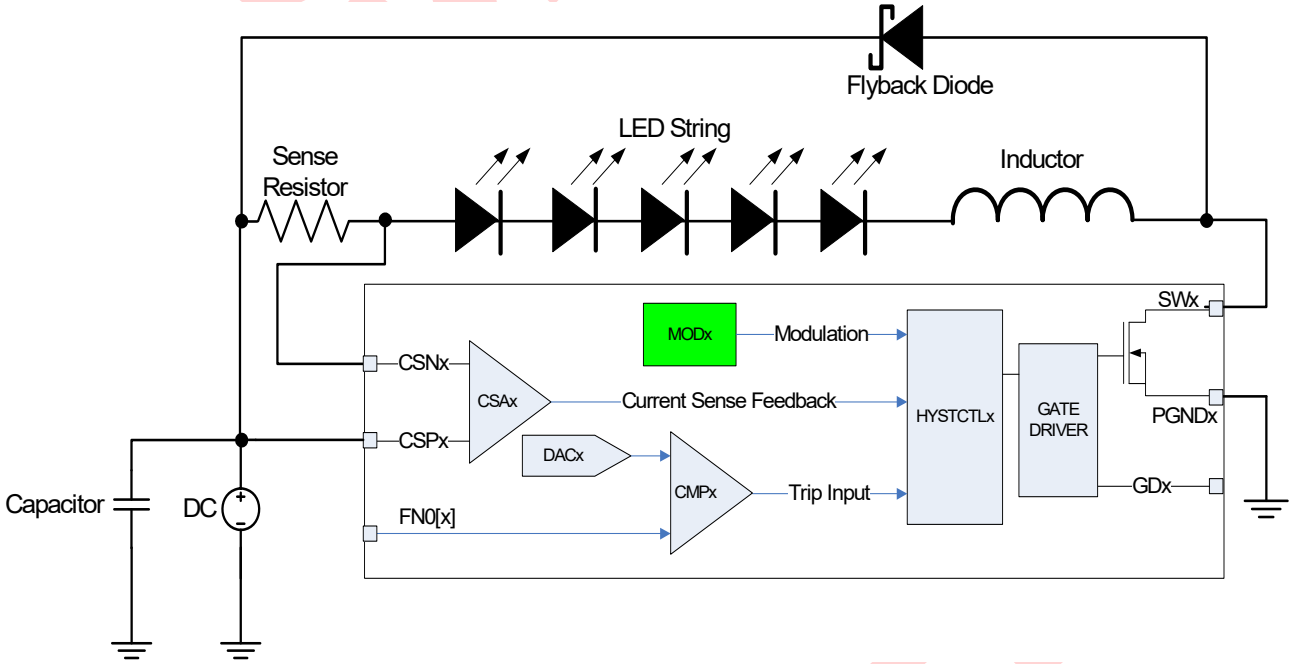

35.1 Architectural Description

The high-level application of the PowerPSoC digital modulator block is to provide dimming for high brightness LED systems. The modulator works by gating the output of the hysteretic regulator such that the final output incorporates the overall intensity or signal density required.

The block diagram of the system showing the role of the digital modulator is shown in Figure 35-1. Architectural block diagrams are present in the PWM, PrISM, and DMM sections.

35.1.1 Block Overview

The digital modulator block module is comprised of a DMM, PrISM, and a PWM signal modulator with an associated programmable clock frequency scalar, configuration registers, and clock frequency scalar logic. The digital modulators are enabled/disabled and configured via memory mapped registers on the system bus. The digital modulator block drives its output onto the digital multiplexed bus.

The programmable clock frequency scalar is clocked directly from the DPWM_CLOCK at 48 MHz or 24 MHz. The output of the programmable frequency scalar is a clock with a frequency equal to DPWM_CLOCK/(N+1), where N is defined in the configurable “DPWMxPCF Programmable Clock Frequency Scalar Register” on page 328. This eliminates the need for using clock resources within the PSoC core (VClock resources or using additional digital block resources).

Each of the three modulation schemes are discussed here.

35.1.1.1 PWM Mode

PWM mode is the most basic of the three modulation schemes. It features a counter and a Pulse Width register. A comparator output, DPWM_OUT, asserts when the count value is “less than” (or “less than or equal to”) the value in the Pulse Width register.

Figure 35-2. PWM Architecture

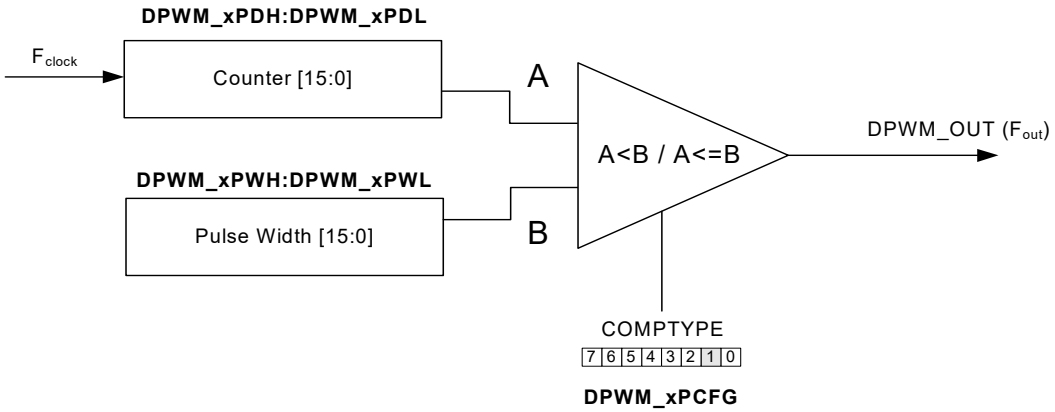

The comparator in Figure 35-2 has two comparative tests (“less than” or “less than or equal to”). The test required by the user is set with the COMPTYPE signal. This is a configuration bit in the DPWMxPCFG register. The alignment of the comparator assertion on DPWM_OUT with an output period is programmable. The comparator assertion can be aligned to the left, right, or center of the output period. This will be discussed in “Counter Directions” on page 326.

OBSOLETE

35.1.1.2 PrISM Mode

PrISM™ (Precision Illumination Signal Modulation) mode compares the output of a pseudo random counter with a signal density value. The comparator output, DPWM_OUT, asserts when the count value is “less than” (or “less than or equal to,” depending on the COMPTYPE bit) the value in the Signal Density register. The value in the Signal Density register represents equivalent pulse width of a PWM modulator's output.

Figure 35-3. PrISM Architecture

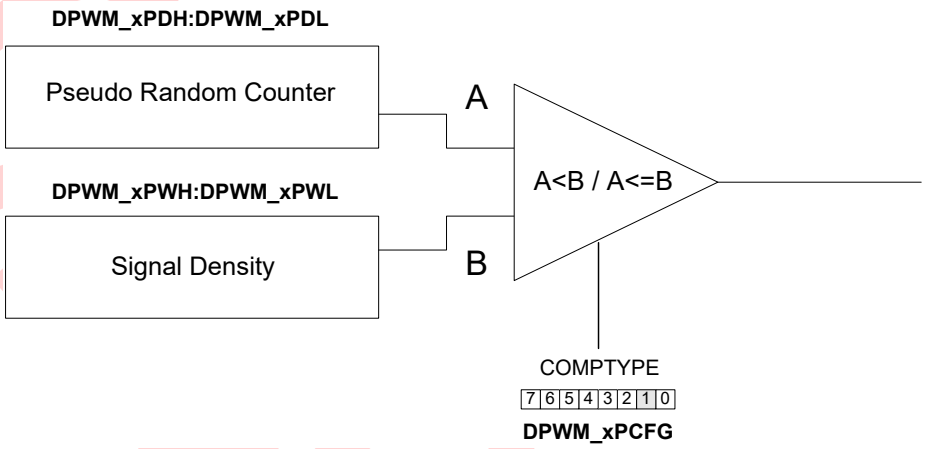

For a given period, there is a certain range on the average output frequency for a range of duty cycle values. The characteristic of this range is shown in Figure 35-4.

Figure 35-4. Average Output Frequency Variability in PrISM Mode for Given Period Value

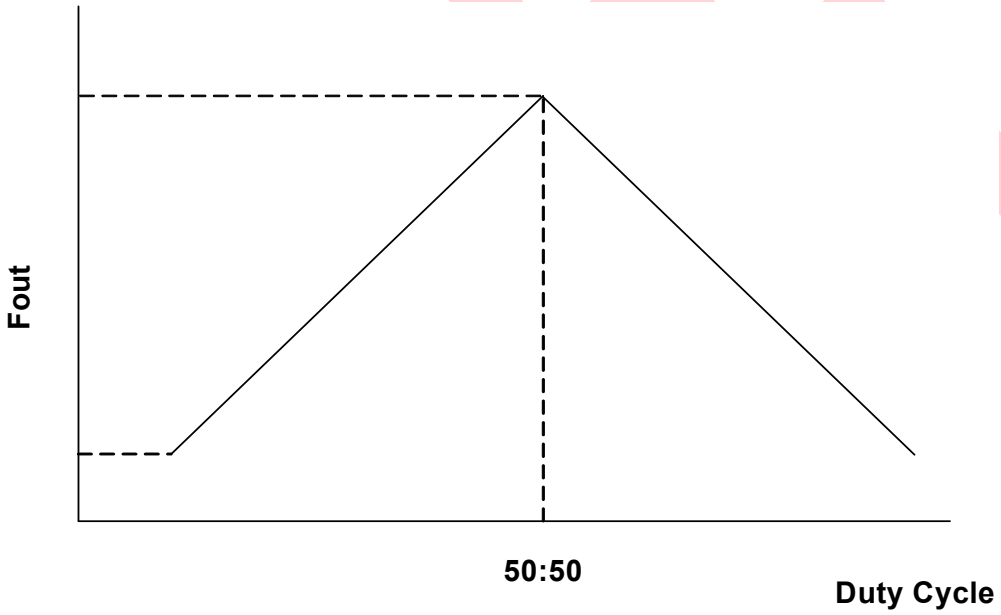

In general, the range on the average output frequency is given by:

$$Fout = 0.5 * SD * Fclk \text{ (for } 1/2^N < SD =< 0.5) \quad \textbf{Equation 1}$$

$$Fout = 0.5 * (1 - SD) * Fclk \text{ (for } 0.5 < SD < 2^{N-1}) \quad \textbf{Equation 2}$$

Here, Fclk is the frequency of the pseudo random count. Here, SD (signal density) is given by:

$$SD = Duty_cycle_value / period \quad \textbf{Equation 3}$$

Here, “period” is the length of the pseudo random count sequence or 2^N-1, where N is the resolution of the PrISM polynomial.

The range in average output frequency given in Figure 35-4 can be undesirable for the application of LED dimming shown in Figure 35-9 for two reasons.

The first problem with this range on Fout is that the maximum average frequency component of the output can be too high. If the pulses of the modulator occur faster than the switching regulator can switch at, there will be a loss of accuracy in signal density.

The second problem with this frequency characteristic is that the minimum average frequency component may be too low. Again, in the intended application, this low dimming frequency causes a visible flicker on the LEDs. This is an undesirable result. The application note, *AN47372 - PrISM Technology for LED Dimming* examines these aspects and discusses methods to work with PrISM successfully.

35.1.1.3 DMM Mode

This is the third modulation scheme in the digital modulator block. Figure 35-5 shows the architecture for the DMM.

Figure 35-5. DMM Architecture

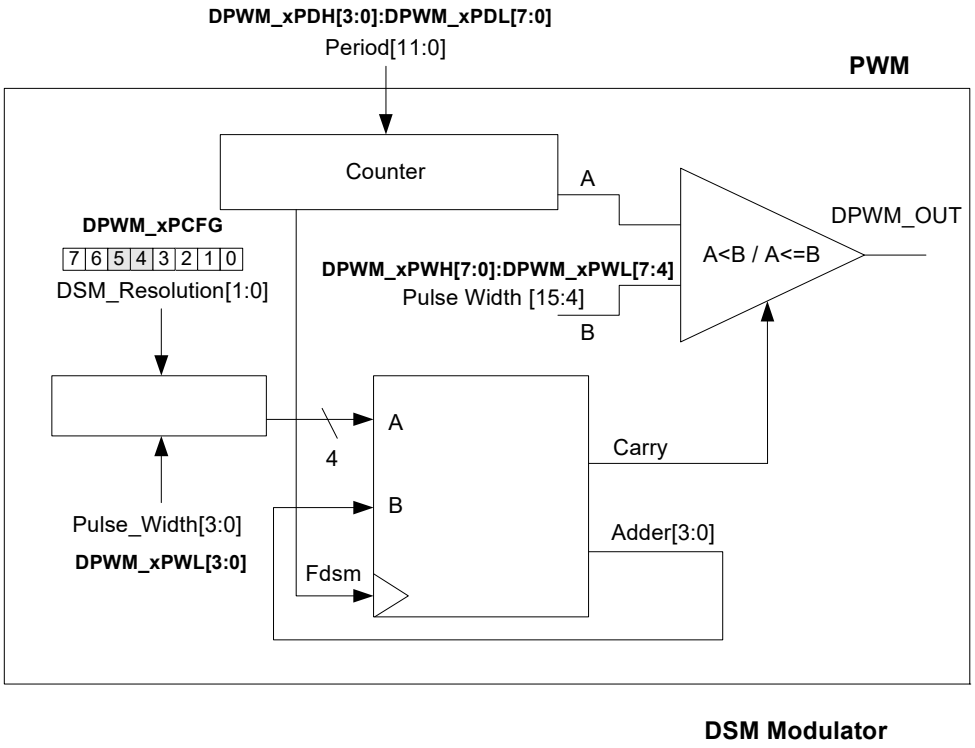

Figure 35-5 can be divided into two parts, namely the Modulator Block and the Delta Sigma Modulator (DSM). The output of the modulator block produces the dimming signal. The adder in the diagram with the feedback path and carry signal in the DSM produce the dither signal, which dithers the PWM signal.

Figure 35-5 shows the counter and period value listed as 12 bits wide. The maximum usable width of the Period register is 12 bits.

In the DSM, the resolution is configurable by the user using registers DPWMxPCFG[5:4] and DPWMxPWL[3:0]. See Table 35-1.

Table 35-1. DSM Resolution Input

DSM Resolution[1:0] (DPWMxPCFG[5:4])	Input to Adder Port A in Figure 35-5
4-Bit Resolution (‘00’)	DPWMxPWL[3:0]
3-Bit Resolution (‘01’)	{DPWMxPWL[2:0], 1'b0}
2-Bit Resolution (‘10’)	{DPWMxPWL[1:0], 2'b0}
1-Bit Resolution (‘11’)	{DPWMxPWL[0], 3'b0}

For each DSM resolution in the table above, the input to the adder Port B in Figure 35-5 is Adder[3:0]. Adder[4] is the carry bit and inputs to the comparator as DMM_COMPTYPE.

When DMM_COMPTYPE is low at the comparator, the comparative test used is A < B. When DMM_COMPTYE is high, the comparative test used is A ≤ B. Hence, every time the adder carry bit asserts, the duty cycle at the output is dithered. This is the basis of the DMM scheme.

In Figure 35-5, the signal Fdsm from the counter drives the adder block. Whenever the counters wrap around, the Fdsm pulses and the adder performs another accumulation operation.

OBSOLETE

35.1.2 Counter Directions

In PWM mode and DMM mode, the alignment of the pulse on the output can be set as left, right, or center aligned. For each of these three alignments, the internal counter of the digital modulator block counts in a different direction.

In the following sub-sections on left, right and center alignment, PRD refers to period, PW refers to pulse width.

For a desired period of PRD, the user must write a value of PRD-1 to the Period register.

The concept of left, right, and center alignment is not used in PrISM mode.

35.1.2.1 Left Alignment

To achieve a left aligned PWM output, the internal counter of the block counts up from 0 to PRD-1. Every time the counter hits PRD-1, it reloads to 0. The output pulse asserts when the counter is “less than” (or “less than or equal to”) the PW.

DPWMxPCFG[1] (the COMPTYPE bit) determines the comparison type (“less than the PW” or “less than or equal to the PW”) and determines the point in time when the falling edge of the pulse occurs as shown in Figure 35-6.

The counter sweep and the output left aligned pulse are shown in the following figure.

Figure 35-6. Left Aligned Counter Sweep and Output Pulse

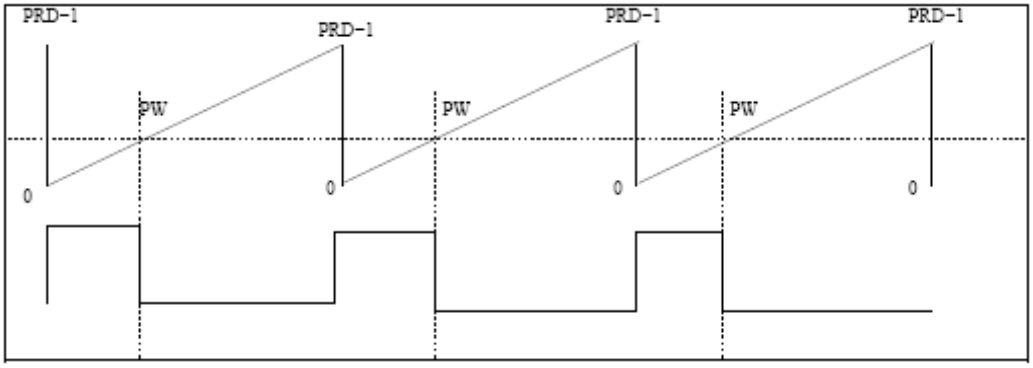

35.1.2.2 Right Alignment

For right alignment, the digital modulator block uses a down counter, counting down from PRD-1 to 0. Every time that the counter hits 0, it reloads to PRD-1. The output asserts when the counter is “less than” (or “less than or equal to”) the PW.

DPWMxPCFG[1] (the COMPTYPE bit) determines the comparison type (“less than the PW” or “less than or equal to the PW”) and determines the point in time when the rising edge of the pulse occurs as shown in Figure 35-7.

The counter sweep and the output right aligned pulse are shown in the following figure.

Figure 35-7. Right Aligned Counter Sweep and Output Pulse

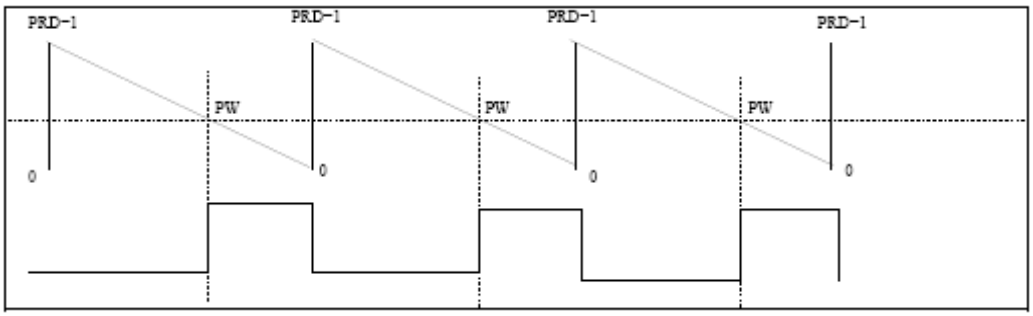

35.1.2.3 Center Alignment

For this mode, there is an up-down counter. First it down counts from PRD-1 to 0; then up counts from 0 to PRD-1. This means that every time the counter hits 0 or PRD-1, the direction of the counter toggles. The output asserts when the counter is “less than” (or “less than or equal to”) the PW.

The effect of DPWMxPCFG[1] (the COMPTYPE bit) operates on both the rising and falling edges of the output pulse.

The counter sweep and the output center aligned pulse are shown in the following figure.

Figure 35-8. Center Aligned Counter Sweep and Output Pulse

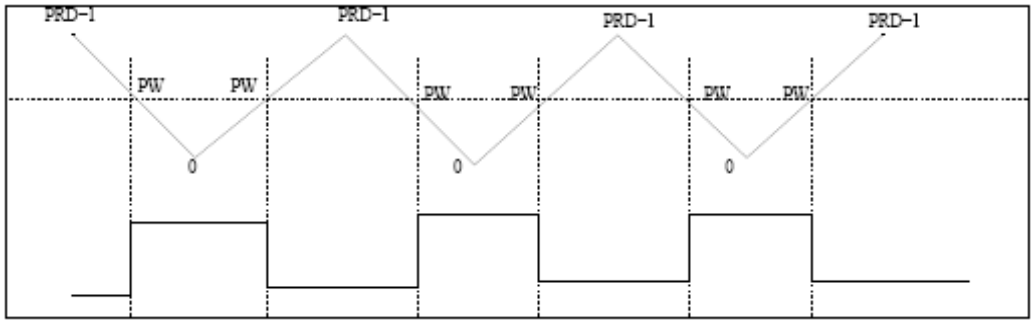

From Figure 35-8, the counter sweep in center alignment is very different to that of left or right alignment. For a given period value PRD, the periodic time of the counter sweep is almost double that for either left or right alignment. Also, for a given pulse width value PW, the width of the output pulse in center alignment is almost double that of either left or right align alignment.

The expression for the effective period in center alignment mode is given by:

$$\text{Effective Period} = 2(\text{PRD}) - 2 \qquad \textbf{Equation 4}$$

The expression for the effective pulse width in center alignment mode is given by:

For COMPTYPE in DPWMxPCFG[1] = 0

$$\text{Effective Pulse Width} = 2(\text{PW}) - 1 \qquad \textbf{Equation 5}$$

For COMPTYPE in DPWMxPCFG[1] = 1

$$\text{Effective Pulse Width} = 2(\text{PW}) + 1 \qquad \textbf{Equation 6}$$

PW is the value set by the user in the Pulse Width register.

OBSOLETE

35.2 Register Definitions

The following registers are associated with the Digital Modulator Block and are listed in address order. Each register description has an associated register table showing the bit structure for that register. For a complete table of Digital Modulator registers, refer to the “Power Peripherals Register Summary” on page 279.

The bits that are grayed out throughout this manual are reserved bits and are not detailed in the register descriptions that follow. Reserved bits should always be written with a value of ‘0’.

The following registers are those for a single digital modulator block. The names of each of the registers here have the prefix DPWMx. There are four such blocks instantiated in the CY8CLED0xx0x. Hence, the prefix represents 0, 1, 2, or 3.

35.2.1 DPWMxPCF Programmable Clock Frequency Scalar Register

Add.	Name	Bit 7	Bit 6	Bit 5	Bit 4	Bit 3	Bit 2	Bit 1	Bit 0	Access
0,40h	DPWM0PCF	PCF[7:0]								RW : 00
0,48h	DPWM1PCF	PCF[7:0]								RW : 00
0,50h	DPWM2PCF	PCF[7:0]								RW : 00
0,58h	DPWM3PCF	PCF[7:0]								RW : 00

The Programmable Clock Frequency Scalar Register (DPWMxPCF) configures the clock scalar for the digital modulator block. This allows the incoming DPWM_CLOCK (either the full rate SYSCLKx2, 48 MHz, or the half rate SYSLCK, 24 MHz) to be scaled down by a factor of PCF+1 to a frequency which, when combined with a selected Period register value, sets the DPWM_OUT output frequency.

Bits 7 to 0: PCF[7:0]. Programmable clock frequency scalar. These 8 bits configure the clock scalar.

For additional information, refer to the DPWMx_PCF register on page 378.

OBSOLETE

35.2.2 DPWMxPDH High Byte of 16-Bit Period Register

Add.	Name	Bit 7	Bit 6	Bit 5	Bit 4	Bit 3	Bit 2	Bit 1	Bit 0	Access
0,41h	DPWM0PDH	PERIOD[15:8]								RW : 00
0,49h	DPWM1PDH	PERIOD[15:8]								RW : 00
0,51h	DPWM2PDH	PERIOD[15:8]								RW : 00
0,59h	DPWM3PDH	PERIOD[15:8]								RW : 00

35.2.3 DPWMxPDL Low Byte of 16-Bit Period Register

Add.	Name	Bit 7	Bit 6	Bit 5	Bit 4	Bit 3	Bit 2	Bit 1	Bit 0	Access
0,42h	DPWM0PDL	PERIOD[7:0]								RW : 00
0,4Ah	DPWM1PDL	PERIOD[7:0]								RW : 00
0,52h	DPWM2PDL	PERIOD[7:0]								RW : 00
0,5Ah	DPWM3PDL	PERIOD[7:0]								RW : 00

The High Byte of 16-Bit Period Register and Low Byte of 16-Bit Period Register (DPWMxPDH, DPWMxPDL) combine to form the 16-bit Period register for the digital modulator block. These registers have a different function depending on the mode of operation of the digital modulator block. (See the DPWMxGCFG Digital Modulator General Configuration Register definition for Mode Selection.)

This is a 16-bit register. The rules governing the updates of this 16-bit register are as follows:

- The user can update the low byte of the register in isolation (i.e., without writing to the high byte).
- The user cannot update the high byte of the register in isolation (i.e., without writing to the low byte).
- When the user wishes to update all 16 bits of the register, they must write the high byte first and then the low byte second.
- The digital modulator block expects that after a write to the high byte of the register, the next write is to the low byte of the register.

Bits 15 to 0: PERIOD[15:0].

1. When in PWM Mode, this register forms the counter which, when compared to the value in the Pulse Width register, allows the generation of the PWM output signal.
   PWM MODE: PERIOD[15:0] = Period.
2. When in PrISM Mode, this register forms the basis for the pseudo random counter.
   PrISM MODE: PERIOD[15:0] = PrISM Polynomial Value

   The specific PrISM polynomial values for each resolution are set out in the following table. If the user writes a value other than these polynomials, the digital modulator block defaults to 12-bit resolution PrISM operation.

Table 35-2. PrISM Polynomial Values

Resolution	PrISM Polynomial Value (Hex)
2-Bit Resolution	0x03
3-Bit Resolution	0x06
4-Bit Resolution	0x0C
5-Bit Resolution	0x1E
6-Bit Resolution	0x39
7-Bit Resolution	0x72
8-Bit Resolution	0xb8
9-Bit Resolution	0x134
10-Bit Resolution	0x2c2
11-Bit Resolution	0x524
12-Bit Resolution	0XCA0
13-Bit Resolution	0x1B00
14-Bit Resolution	0x3802
15-Bit Resolution	0x5280
16-Bit Resolution	0xD008

3. When in DMM Mode, this register has a maximum limit of 12 bits (PERIOD [11:0]). The 4 most significant bits [15:12] should be set to ‘0’.
   DMM MODE: PERIOD[11:0] = PERIOD; PERIOD[15:12] = 4'b0000.

For additional information, refer to the DPWMx_PDH register on page 379 and DPWMx_PDL register on page 381.

PRELIMINARY

35.2.4 DPWMxPWH High Byte of 16-Bit Pulse Width Register

Add.	Name	Bit 7	Bit 6	Bit 5	Bit 4	Bit 3	Bit 2	Bit 1	Bit 0	Access
0,43h	DPWM0PWH	PW[15:8]								RW : 00
0,4Bh	DPWM1PWH	PW[15:8]								RW : 00
0,53h	DPWM2PWH	PW[15:8]								RW : 00
0,5Bh	DPWM3PWH	PW[15:8]								RW : 00

35.2.5 DPWMxPWL Low Byte of 16-Bit Pulse Width Register

Add.	Name	Bit 7	Bit 6	Bit 5	Bit 4	Bit 3	Bit 2	Bit 1	Bit 0	Access
0,44h	DPWM0PWL	PW[7:0]								RW : 00
0,4Ch	DPWM1PWL	PW[7:0]								RW : 00
0,54h	DPWM2PWL	PW[7:0]								RW : 00
0,5Ch	DPWM3PWL	PW[7:0]								RW : 00

The High Byte of 16-Bit Pulse Width Register and Low Byte of 16-Bit Pulse Width Register (DPWMxPWH, DPWMxPWL) combine to form the 16-bit Pulse Width register for the digital modulator block. These registers have a different function depending on the mode of operation of the digital modulator block. (See the DPWMxGCFG Digital Modulator General Configuration Register definition for Mode Selection.)

This is a 16-bit register. The rules governing the updates of this 16-bit register are as follows:

- The user can update the low byte of the register in isolation (i.e., without writing to the high byte).
- The user cannot update the high byte of the register in isolation (i.e., without writing to the low byte).
- When the user wishes to update all 16 bits of the register, they must write the high byte first and then the low byte second.
- The digital modulator block expects that after a write to the high byte of the register, the next write is to the low byte of the register.

Bits 15 to 0: PW[15:0].

1. When in PWM Mode, this register forms the Pulse Width register which, when compared to the value in the down counter, allows the generation of the PWM output signal. PWM MODE: DPWMxPW[15:0] = Pulse Width.
2. When in PrISM Mode, this register forms the basis for the signal density. The value in the pseudo-random counter is compared to the value in this register to generate the output. PrISM MODE: PW[15:0] = Pulse Width.
3. When in DMM Mode, this Pulse Width register is split into two fields. PW[15:4] is the effective DMM pulse width and is compared against the counter. PW[3:0] is the fractional Pulse Width that forms the input to the adder. DMM MODE: PW[15:4] = Pulse Width; PW[3:0] = Fraction of the Pulse Width.

For additional information, refer to the DPWMx_PWH register on page 383 and DPWMx_PWL register on page 384.

PRELIMINARY

35.2.6 DPWMxPCH High Byte of 16-Bit Phase Control Register

Add.	Name	Bit 7	Bit 6	Bit 5	Bit 4	Bit 3	Bit 2	Bit 1	Bit 0	Access
0,45h	DPWM0PCH	PC[15:8]								RW : 00
0,4Dh	DPWM1PCH	PC[15:8]								RW : 00
0,55h	DPWM2PCH	PC[15:8]								RW : 00
0,5Dh	DPWM3PCH	PC[15:8]								RW : 00

35.2.7 DPWMxPCL Low Byte of 16-Bit Phase Control Register

Add.	Name	Bit 7	Bit 6	Bit 5	Bit 4	Bit 3	Bit 2	Bit 1	Bit 0	Access
0,46h	DPWM0PCL	PC[7:0]								RW : 00
0,4Eh	DPWM1PCL	PC[7:0]								RW : 00
0,56h	DPWM2PCL	PC[7:0]								RW : 00
0,5Eh	DPWM3PCL	PC[7:0]								RW : 00

The High Byte of 16-Bit Phase Control Register and Low Byte of 16-Bit Phase Control Register (DPWMxPCH, DPWMxPCL) combine to form the 16-bit Phase Control register. These registers are used during SYNC MODE operation of the digital modulator block.

This is a 16-bit register. The rules governing the updates of this 16-bit register are as follows:

- The user can update the low byte of the register in isolation (i.e., without writing to the high byte).
- The user cannot update the high byte of the register in isolation (i.e., without writing to the low byte).
- When the user wishes to update all 16 bits of the register, they must write the high byte first and then the low byte second.
- The digital modulator block expects that after a write to the high byte of the register, the next write is to the low byte of the register.

Bits 15 to 0: PC[15:0]. The DPWMxPCH and DPWMxPCL registers combine to form the 16-bit Phase Control Register.

This register can only be used in SYNC MODE. This is a mode that uses up to four digital modulator blocks in a parallel configuration.

When in SYNC MODE, this register can be used only for PWM and DMM modes.

The user MUST NOT write to the Phase register when in PrISM mode. To do so will cause unexpected results.

SYNC MODE allows the user to offset the output pulses of up to three slave digital modulator blocks with respect to a master digital modulator.

For additional information, refer to the DPWMx_PCH register on page 385 and DPWMx_PCL register on page 386.

OBSOLETE

35.2.8 DPWMxGCFG Digital Modulator General Configuration Register

Add.	Name	Bit 7	Bit 6	Bit 5	Bit 4	Bit 3	Bit 2	Bit 1	Bit 0	Access
0,47h	DPWM0GCFG						MODE[1:0]		GLEN	RW : 0
0,4Fh	DPWM1GCFG						MODE[1:0]		GLEN	RW : 0
0,57h	DPWM2GCFG						MODE[1:0]		GLEN	RW : 0
0,5Fh	DPWM3GCFG						MODE[1:0]		GLEN	RW : 0

The Digital Modulator General Configuration Register (DPWMxGCFG) is used to configure the digital modulator block modes.

Bits 2 to 1: MODE[1:0]. These are the digital modulator block mode selection bits. ‘00’ is Pulse Width Modulation (PWM Mode). ‘01’ is Pseudo Random PWM (PrISM Mode). ‘10’ is Delta Sigma Modulator (DMM Mode).

Bit 0: GLEN. Global enable signal. ‘0’ is dimming signal held at logic 1. ‘1’ is dimming signal active.

For additional information, refer to the DPWMx_GCFG register on page 387.

35.2.9 DPWMxPCFG Digital Modulator Operating Configuration Register

Add.	Name	Bit 7	Bit 6	Bit 5	Bit 4	Bit 3	Bit 2	Bit 1	Bit 0	Access
0,78h	DPWM0PCFG		CENTRE_INT_LOC	DSM_RESOLUTION[1:0]		ALIGN[1:0]		COMPTYPE	INTTYPE	RW : 00
0,79h	DPWM1PCFG		CENTRE_INT_LOC	DSM_RESOLUTION[1:0]		ALIGN[1:0]		COMPTYPE	INTTYPE	RW : 00
0,7Ah	DPWM2PCFG		CENTRE_INT_LOC	DSM_RESOLUTION[1:0]		ALIGN[1:0]		COMPTYPE	INTTYPE	RW : 00
0,7Bh	DPWM3PCFG		CENTRE_INT_LOC	DSM_RESOLUTION[1:0]		ALIGN[1:0]		COMPTYPE	INTTYPE	RW : 00

The Digital Modulator Operating Configuration Register (DPWMxPCFG) is used to configure operating modes of the digital modulator block.

Bit 6: CENTRE_INT_LOC. ‘0’ means that the terminal interrupt occurs at the trough of the counter sweep. ‘1’ means that the terminal interrupt occurs at the peak of the counter sweep. This bit is valid only when ALIGN[1:0] is set for center alignment mode and the INTTYPE is set for the terminal count.

Bits 5 to 4: DSM_RESOLUTION[1:0]. These bits set the resolution for the dither part in DMM mode.’ 00’ is 4-bit resolution. ‘01’ is 3-bit resolution. ‘10’ is 2-bit resolution. ‘11’ is 1-bit resolution.

Bits 3 to 2: ALIGN[1:0]. These are the alignment selection bits. ‘00’ is left alignment to the period clock. ‘01’ is center alignment (even period and duty cycles) to the clock period. ‘10’ is right alignment to the period clock.

Bit 1: COMPTYPE. Compare type selection. ‘0’ is compare step made based on the “less than” criteria. ‘1’ is compare step made based on “less than or equal to” criteria.

Bit 0: INTTYPE. Interrupt type selection. ‘0’ is CPU interrupt enabled for the edge of the output. ‘1’ is CPU interrupt enabled for the end of the period (terminal count).

For additional information, refer to the DPWMxPCFG register on page 405.

OBSOLETE

35.2.10 DPWMINTFLAG Digital Modulator Interrupt Status Register

Add.	Name	Bit 7	Bit 6	Bit 5	Bit 4	Bit 3	Bit 2	Bit 1	Bit 0	Access
0,7Ch	DPWMINTFLAG					PWM_INT3	PWM_INT2	PWM_INT1	PWM_INT0	RW : 0

The Digital Modulator Interrupt Status Register (DPWMINTFLAG) is used to store the status of the interrupts generated the by the four digital modulator blocks. These are numbered 0, 1, 2, and 3.

Bit 3: PWM_INT3. '0' is no interrupt generated from the DPWM3 block. '1' is interrupt generated by the DPWM3 block. Writing '1' to this bit clears the interrupt source.

Bit 2: PWM_INT2. '0' is no interrupt generated from the DPWM2block. '1' is interrupt generated by the DPWM2-block. Writing '1' to this bit clears the interrupt source.

Bit 1: PWM_INT1. '0' is no interrupt generated from the DPWM1 block. '1' is interrupt generated by the DPWM1 block. Writing '1' to this bit clears the interrupt source.

Bit 0: PWM_INT0. '0' is no interrupt generated from the DPWM0 block. '1' is interrupt generated by the DPWM0 block. Writing '1' to this bit clears the interrupt source.

For additional information, refer to the DPWMINTFLAG register on page 406.

35.2.11 DPWMINTMSK Digital Modulator Interrupt Mask Register

Add.	Name	Bit 7	Bit 6	Bit 5	Bit 4	Bit 3	Bit 2	Bit 1	Bit 0	Access
0,7Dh	DPWMINTMSK	MSK_HP3	MSK_HP2	MSK_HP1	MSK_HP0	MSK_LP3	MSK_LP2	MSK_LP1	MSK_LP0	RW : 00

The Digital Modulator Interrupt Mask Register (DPWMINTMSK) is used to mask of the interrupts generated the by digital modulator block.

Note Unmask only one high priority (HP) interrupt and one low priority (LP) interrupt at a time. Unmasking more than one each could cause undesirable behavior.

Bit 7: MSK_HP3. '0' masks the HP interrupt generated by the DPWM3 block. '1' unmasks the HP interrupt generated by the DPWM3 block.

Bit 6: MSK_HP2. '0' masks the HP interrupt generated by the DPWM2 block. '1' unmasks the HP interrupt generated by the DPWM2 block.

Bit 5: MSK_HP1. '0' masks the HP interrupt generated by the DPWM1 block. '1' unmasks the HP interrupt generated by the DPWM1 block.

Bit 4: MSK_HP0. '0' masks the HP interrupt generated by the DPWM0 block. '1' unmasks the HP interrupt generated by the DPWM0 block.

Bit 3: MSK_LP3. '0' masks the LP interrupt generated by the DPWM3 block. '1' unmasks the LP interrupt generated by the DPWM3 block.

Bit 2: MSK_LP2. '0' masks the LP interrupt generated by the DPWM2 block. '1' unmasks the LP interrupt generated by the DPWM2 block.

Bit 1: MSK_LP1. '0' masks the LP interrupt generated by the DPWM1 block. '1' unmasks the LP interrupt generated by the DPWM1 block.

Bit 0: MSK_LP0. '0' masks the LP interrupt generated by the DPWM0 block. '1' unmasks the LP interrupt generated by the DPWM block.

For additional information, refer to the DPWMINTMSK register on page 407.

OBSOLETE

35.2.12 DPWMSYNC Digital Modulator Sync Mode Register

Add.	Name	Bit 7	Bit 6	Bit 5	Bit 4	Bit 3	Bit 2	Bit 1	Bit 0	Access
0,7Eh	DPWMSYNC	DPWM3	DPWM2	DPWM1	DPWM0	CLK_SEL	SYNC_MASTER_SEL[1:0]		SYNC_MODE	RW : 00

The Digital Modulator Sync Mode Register (DPWMSYNC) is used to configure the SYNC MODE scheme. SYNC MODE is a scheme in which two or more of the four digital modulator blocks in the logic core operate in synchronism. One of these digital modulator blocks is designated the master (using DPWMSYNC[2:1] and the remaining digital modulator blocks in the scheme are the slaves. The blocks that participate in the SYNC scheme are indicated by DPWMSYNC[7:4]. The output pulses of the slave digital modulator block can be phase shifted relative to the master. The amount of phase shift for a slave digital modulator block is specified in the DPWMxPCH and DPWMxPCL register for that digital modulator block.

Bit 7: DPWM3. '0' is DPWM3 will not participate in SYNC MODE. '1' is DPWM3 will participate in SYNC MODE.

Bit 6: DPWM2. '0' is DPWM2 will not participate in SYNC MODE. '1' is DPWM2 will participate in SYNC MODE.

Bit 5: DPWM1. '0' is DPWM1 will not participate in SYNC MODE. '1' is DPWM1 will participate in SYNC MODE.

Bit 4: DPWM0. '0' is DPWM0 will not participate in SYNC MODE. '1' is DPWM0 will participate in SYNC MODE.

Bit 3: CLK_SEL. '0' selects the 48 MHz CLK for the DPWM block. '1' selects the 24 MHz CLK for the digital modulator block.

Bits 2 to 1: SYNC_MASTER_SEL[1:0]. '00' DPWM0 is the MASTER. '01' DPWM1 is the MASTER. '10' DPWM2 is the MASTER. '11' DPWM3 is the MASTER.

Bit 0: SYNC_MODE. '0' disables the SYNC MODE. '1' enables the SYNC MODE.

For additional information, refer to the DPWMSYNC register on page 408.

OBSOLETE

35.2.13 Dynamic and Static Configuration Registers

The following registers and register bit fields can be dynamically changed during digital modulator operation:

- Period (in the DPWMxPDH and DPWMxPDL registers).
- Pulse Width (in the DPWMxPWH and DPWMxPWL registers).
- Phase Control (in the DPWMxPCH and DPWMxPCL registers) in SYNC MODE only.
- Clock Frequency Scalar (in the DPWMxPCF registers). However, this cannot be dynamically changed in SYNC MODE.
- SYNC_MODE enable bit in DPWMSYNC[0].
- SYNC_MASTER_SEL bits in DPWMSYNC[2:1]. These bits can only be changed among the digital modulator blocks that are already in SYNC.
- INTTYPE in DPWMxPCFG[0].
- COMPTYPE bit in DPWMxPCFG[1].
- DSM_RESOLUTION bits in DPWMxPCFG[5:4].
- CENTRE_INT_LOC bit in DPWMxPCFG[6].
- Global Enable (GLEN) bit in DPWMxGCFG[0].

The bits in the following register bit field can be dynamically deasserted during digital modulator operation:

- Participation bits DPWMSYNC[7:4].

The bits in the following registers and register bit fields cannot be dynamically asserted during digital modulator operation:

- CLK_SEL bit in DPWMSYNC[3].
- Output pulse alignment on DPWM_OUT in DPWMxPCFG[3:2].
- digital modulator scheme in DPWMxGCFG[2:1].

To change the these register fields, the global enable bit in DPWMxGCFG[0] must be deasserted before-hand.

35.2.13.1 Notes on Dynamic Registers

Global Enable Bit (DPWMxGCFG[0])

When this bit is deasserted, the DPWM_OUT output of the digital modulator block defaults to logic high. When this bit is re-asserted, the internal counter is reset to its starting position. Hence, at the reassertion of the Global Enable bit, the digital modulator operation does not continue from where it stopped at the deassertion of the Global Enable bit.

Clock Divider Register (DPWMxPCF)

This register divides the incoming DPWM_CLOCK. The divided DPWM_CLOCK determines the frequency of DPWM_OUT. DPWMxPCF can be updated dynamically. (However, not while in SYNC MODE). In the logic, the DPWM_CLOCK divider uses an internal down counter that counts from DPWMxPCF to 0. When the DPWMxPCF value changes dynamically, this new value is used in the division logic only after the count from the previous DPWMxPCF value has reached 0. Hence, the user will notice a delay between the writing of the new DPWMxPCF value and when this takes effect on the DPWM_OUT. This is particularly true when changing DPWMxPCF from a large value.

Period Register (DPWMxPDH/L) in PWM or DMM Mode

When the Period value is dynamically changed, the mechanism in which the modulation logic reloads to the new Period value depends on the current alignment setting in use. In this explanation, it is helpful to recall the counter sweep diagrams.

Right Alignment In right alignment, the new Period is not used until the counter has decremented as normal to 0 and reloaded to the new Period.

Left Alignment In left alignment, the new Period value is compared against the present value of the counter.

If the present counter value is less than the new Period, the counter increments as normal to the new Period and reloads to 0.

If the present counter value is greater than the new Period, the counter is forced to zero. Thereafter, the counter begins to increment as normal. Without this scheme, if the counter is greater than the new Period, the counter sweep would never hit the new Period and would increment to 2^16. This would cause undesirable behavior on DPWM_OUT.

Center Alignment In center alignment, the counter direction is tested.

If the counter is decrementing when the new Period is introduced to the design, the counter decrements to as normal to 0 and then increments as normal to the new Period.

If the counter is incrementing and the new Period is introduced to the design, the scenario is similar to that of left alignment. If the present counter value is less than the new Period, the counter increments as normal to the new Period.

If the present counter value is greater than the new Period, the counter is forced to 0. Thereafter the counter begins to increment as normal.

OBSOLETE

Period Register (DPWMxPDH/L) in PrISM Mode

In PrISM mode, the digital modulator logic reloads the dynamically changed Period value in a special way.

The value in the DPWMxPD(H\L) register is referred to as the PrISM polynomial. Each PrISM polynomial gives a pseudo random sequence of values. When the sequence is complete, the sequence wraps to the start and repeats.

When the PrISM polynomial is dynamically changed, the sequence of the previous PrISM polynomial completes before the new polynomial is used by the logic.

Hence, when changing from a high resolution polynomial, for example, the user must anticipate a latency before the new polynomial takes effect.

The feature of left, right, and center alignment is not used in PrISM mode.

35.2.14 Register Write Synchronization

The values for the digital modulator configuration registers are written on the MCU CLK. These incoming values must be synchronized to the operational DPWM_CLOCK of the block. This is carried out by the block itself. With this scheme the user will see a delay between writing the register value and the time at which the value is used in the digital modulator.

35.2.15 Use of Very Low Period Values

In general, to get a desired Period of PRD, the user must write a value of PRD-1 to the Period register.

- The user cannot have a desired Period of 0 as this would require writing -1 to the Period register. A Period of 0 is also meaningless.
- For a Period of 1, the user writes ‘0’ to the Period register. In this case, the internal counter is fixed at 0. (True for all alignments.)
- For a Period of 2, the user writes ‘1’ to the Period register. In this case, a problem occurs in center and left alignment modes.

Center Alignment The desired pattern on the internal counter is 1-0-1-0-1-0-1-0... This does not occur, as the reload mechanism for the center mode is complex and takes longer than two counter clock cycles.

Left Alignment The desired pattern on the internal counter is 0-1-0-1-0-1-0-1… This does not occur, as, in general, the left aligned counter counts between following end points, PRD-1 and 0. The counter initiates the reload mechanism at one value before the final end point. For a period register value of 1, this value is the same as the reload value that is 0. Hence, the counter is not allowed to count up to 1 since it immediately gets reloaded to 0.

Therefore, in left alignment mode the counter is stuck at 0.

Right Alignment The desired pattern on the right aligned counter is 1-0-1-0-1-0... This functions correctly. Aside from the leading 0 in left alignment mode, the pattern of alternating 1 and 0 is the same for each of these three alignments, left, center, and right.

Hence, as a workaround for the center and left alignment shortcoming, the user should change to right alignment for a desired period value of 2.

35.2.15.1 Rules Governing Very Low Period Values

- In center alignment mode the user cannot write ‘1’ to the Period register.
- In left alignment mode the user cannot write ‘1’ to the Period register.
- If the user has a desired period of 2 in either center or left alignment mode, they should operate in right alignment mode.

OBSOLETE

35.3 Timing Diagrams

Figure 35-9. DPWM_OUT in the Three Alignments; Right, Left and Center

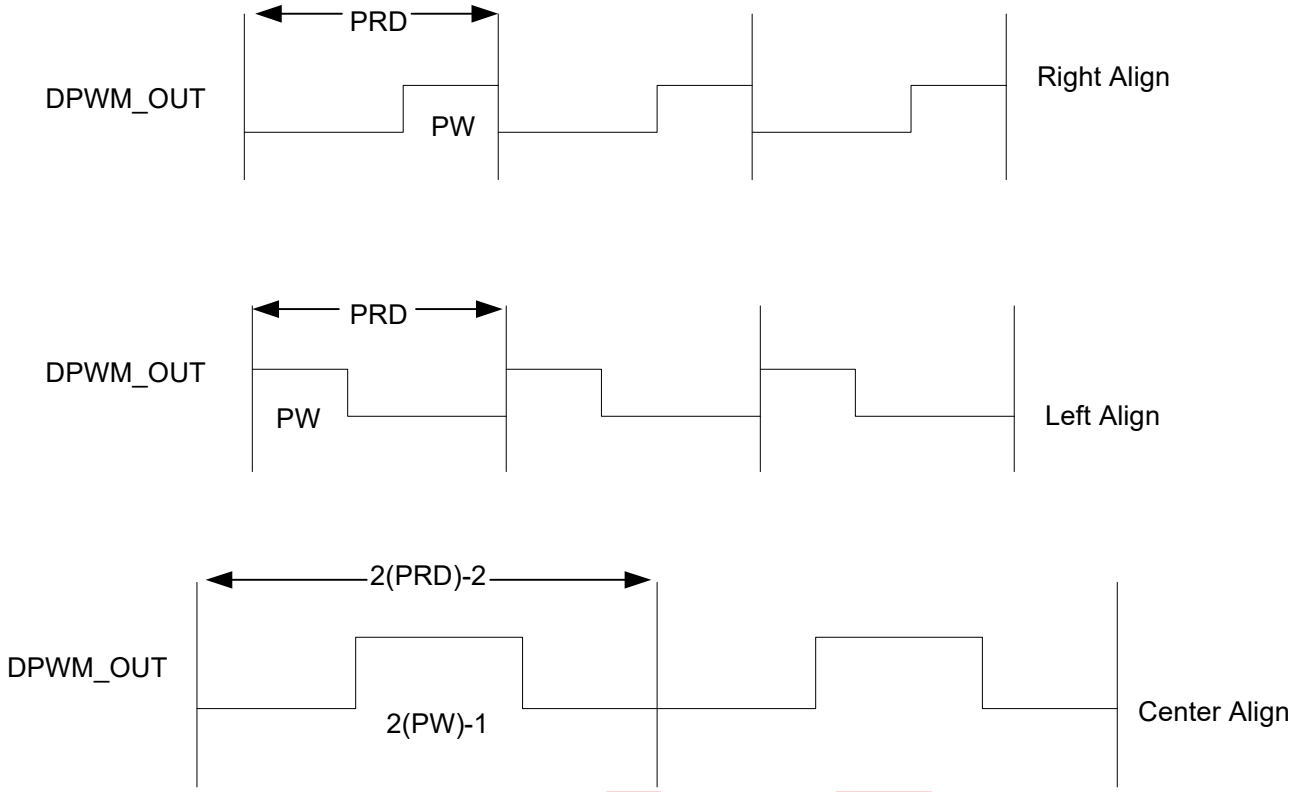

Figure 35-9 shows the DPWM_OUT for the PWM for each of the three alignments.

Here, PRD is the desired period. PW is the value in the DPWMxPWH/L register.

Assume for these diagrams that the COMPTYPE bit in the DPWMxPCFG register is set to '0'.

The effective period and pulse width of the center alignment output is greater than those of either left alignment or right alignment for the same PRD and PW.

The diagrams for the DMM are very similar, except that the pulses may be subject to dithering.

OBSOLETE

35.3.1 PWM Timing

The following is an example configuration of PWM mode. The digital modulator block is configured as follows:

- The incoming DPWM_CLOCK is 24 MHz.
- The DPWMxPCF value is 12.
- The digital modulator block is configured for right alignment.
- The period is 200.
- The pulse width is 40.
- The COMPTYPE bit is deasserted.
  - By the previous two points, the effective output pulse width is 40.
- The duty cycle of the DPWM_OUT signal is 0.2.
- The output frequency is 9.23 kHz.

35.3.2 DMM Timing

The following is an example configuration of DMM mode. The digital modulator block is configured as follows:

- The DPWM_CLOCK is 24 MHz.
- The PCF value is 0.
- The period is 2048.
- The pulse width is 1023.
  - This means that the non-dithered pulse width on the output is 1023.
  - Each dithered pulse width on the output is 1024.
- The fractional pulse width is 5 (Binary 0101).
- The DSM resolution is 2'b00, i.e., 4-bit DSM resolution.
  - These later two points mean that the dither fraction is 5/16.
  - The later two points mean that for 16 consecutive pulses on DPWM_OUT, 5 are dithered and the remaining 11 are not dithered. The 5 dithered pulses are distributed throughout the 16 pulses.
- The net pulse width in this setup is 1023.3125.
- The effective duty cycle is 1023.3125 / 2048.
- The output is configured for left alignment mode.
- The output frequency is 11.7 kHz.

35.3.3 PrISM Timing

The following is an example configuration of PrISM mode. The digital modulator block is configured as follows:

- The DPWM_CLOCK is 24 MHz.
- The PCF value is 0.
- The PrISM polynomial used is B8. This means 8-bit resolution.
- The signal density is 30.
- The COMPTYPE bit is set to ‘0’.
  - The previous two points mean that the effective pulse width of the output is 29.
- The output duty cycle (signal density) of 0.11.
- Alignment is not used in PrISM mode.
- The average output frequency is 1.32 MHz.

OBSOLETE

35.4 SYNC MODE Use

This section discusses the use of the digital modulator blocks in SYNC MODE. SYNC MODE is a scheme where two or more digital modulator blocks can operate in synchronism.

Following is a description of the SYNC scheme and the general conditions of use.

- There are four digital modulator blocks in the Logic Core.
- Four, three, or two of the digital modulator blocks can participate in SYNC MODE. Which digital modulator blocks are participating in SYNC is defined by the user in DPWMSYNC[7:4].
- In SYNC MODE, one of the participating digital modulator blocks is specified as the master. The remaining participating digital modulator blocks are slaves.
- When a subset of the four digital modulator blocks are participating in SYNC MODE, the remaining digital modulator blocks can be operated independent of SYNC MODE.
- In SYNC MODE, the following register fields must be the same for each participating digital modulator block:
  - Period specified in DPWMxPD(H\L)
  - Mode (PWM or DMM only) specified in DPWMxGCFG[2:1]
  - Alignment (left, right, or center) specified in DPWMxPCFG[3:2]
  - Clock Divider value specified in DPWMxPCF

- The DPWMxPC(H\L) register for a slave digital modulator block indicates the phase shift of the slave with respect to the master digital modulator block.
- In left alignment, the start point of the slave's internal counter is phase shifted to the right with respect to that of master.
- In right alignment, the start point of the slave's internal counter is phase shifted to the left with respect to that of the master.
- In center alignment, the trough of the slave's internal counter is phase shifted to the left with respect to that of the master.
- In each of the three previous cases above, a zero value for a slave in DPWMxPC(H\L) results in a zero phase shift with respect to the master.
- SYNC MODE is not supported in PrISM mode. SYNC applies only to PWM and DMM mode.
- In DMM mode, the output from the digital modulator blocks is dithered periodically. Dithering means that the pulse width on DPWM_OUT is lengthened by one counter clock period. When the digital modulator blocks that are participating in SYNC MODE are configured for DMM mode, the presence of periodic dithering on the output pulses of the digital modulator blocks is not guaranteed to be coincident.
- The phase shifting is done with respect to the master. Hence, the master counter is not phase shifted.
- Once the SYNC enable bit in the DPWMSYNC register is set, the participating digital modulator blocks will not achieve SYNC immediately. It typically takes 2-3 counter periods of the participating digital modulator blocks to achieve SYNC MODE. Thereafter, the participating blocks remain in SYNC.
- In SYNC MODE when in center alignment, the smallest value allowed in the Period register is 3.

A typical configuration routine for the SYNC and non-SYNC MODE scheme is as follows:

- The user sets the CLK_SEL bit in DPWMSYNC[3]. This register write must be the first to be set in the initialization sequence.
- The user populates the following registers of the digital modulator blocks:
  - DPWMxPD(H\L)
  - DPWMxPW(H\L)
  - DPWMxPC(H\L)
  - DPWMxPCF
  - DPWMxPCFG
  - DPWMxGCFG

- As per the above list, the DPWMxGCFG must be the final register in the initialization sequence.
- The digital modulator blocks can operate in normal independent mode.
- Prior to setting SYNC MODE, the user should ensure that the DPWMxPCF, DPWMxPD(H\L), DPWMxPCFG[3:2], and DPWMxGCFG[2:1] register fields of the digital modulator blocks intended for SYNC are equal.
- To start SYNC MODE, the user must write to the DPWMSYNC register. In this register write the user must set the following:
  - The required participating digital modulator blocks in DPWMSYNC[7:4].
  - The required master digital modulator block in DPWMSYNC[2:1].
  - The SYNC_MODE bit in the DPWMSYNC[0].

PROFILE

- DPWMxPD(H\L), DPWMxPW(H\L), and DPWMxPC(H\L) of the participating digital modulator blocks can be changed while in SYNC MODE. However, if the DPWMxPD(H/L) is modified during SYNC operation, the blocks will fall out of SYNC.
- To leave SYNC MODE, the user must deassert the SYNC_MODE bit in DPWMSYNC[0].
- The digital modulator blocks can then operate independently again.
- To re-enter SYNC MODE, the user must reassert the SYNC_MODE bit in DPWMSYNC[0].
- The registers of those digital modulator blocks not participating in SYNC MODE can be updated independently without any condition on the DPWMxPCF, DPWMxPD(H\L), DPWMxGCFG[2:1], or DPWMxPCFG[3:2] register fields.

As an example, Figure 35-10 below gives the DPWM_OUT waveform of each of the digital modulator blocks when in SYNC MODE. The features of this setup are as follows:

- All four digital modulator blocks are participating in SYNC MODE.
- All digital modulator blocks are in left alignment.
- DPWM0 is specified as the master. Therefore, DPWM1, DPWM2, and DPWM3 are slaves.
- Slaves DPWM1 and DPWM3 are shifted to the right with respect to the master by a non-zero phase shift.
- Slave DPWM2 is shifted by a zero phase with respect to the master, i.e., it is not phase shifted at all.

Figure 35-10. DPWM_OUT Waveform of Digital Modulator Blocks

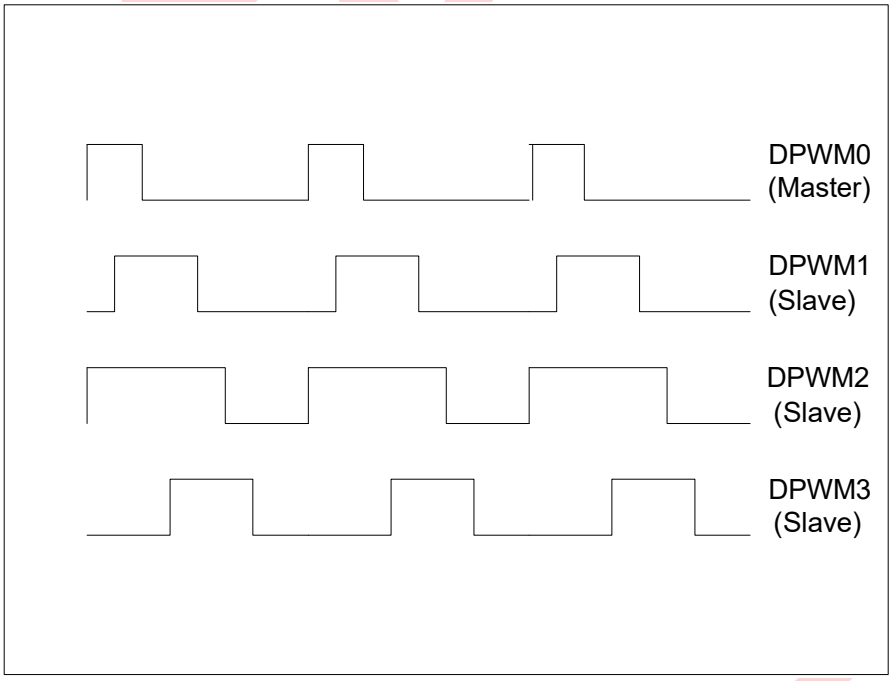

35.5 Digital Modulator Interrupts

This section explains how the interrupts are generated by the digital modulator block.

The main interrupt configuration bit for the digital modulator is INTTYPE in DPWMxPCFG[0]. Interrupts are generated by the digital modulator block differently for each value of INTTYPE.

The modulator interrupt has a high priority and low priority mask register and a flag register bit associated with it. See the "DPWMINTMSK Digital Modulator Interrupt Mask Register" on page 333 and "DPWMINTFLAG Digital Modulator Interrupt Status Register" on page 333 for details. The user has the capability to choose any one of the four interrupts for high priority and low priority interrupts. Interrupts can be locally masked by setting the corresponding mask bits in the high priority mask register or the low priority mask register.

35.5.1 INTTYPE = '0'

When INTTYPE is '0', the interrupt is generated by the digital modulator on the rising edge of the output pulse on the digital modulator. This is the case for left, right, and center alignment. This is meaningful only in PWM and DMM mode.

Figure 35-11. Interrupt in PWM and DMM Mode with INTTYPE = '0'

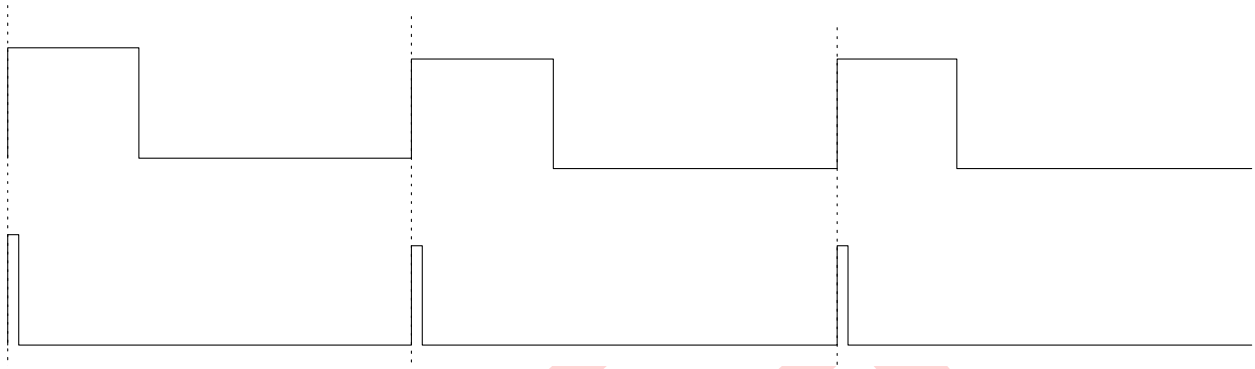

In PrISM mode, no interrupt is produced for INTTYPE = '0'.

35.5.2 INTTYPE = '1'

When INTTYPE is '1', the interrupt is generated by the digital modulator on the terminal count (i.e., when the internal counter reaches the end of its range). In PWM and DMM modes, the terminal count depends on the alignment configuration. In each of the following alignments, the peak value is the value programmed in the DPWMxPD (or Period) register.

In right alignment mode, the counter starts from the peak value and decrements to zero and then reloads. Every time the counter reaches zero, an interrupt is generated by the digital modulator.

Figure 35-12. INTTYPE = '1' Right Alignment Mode

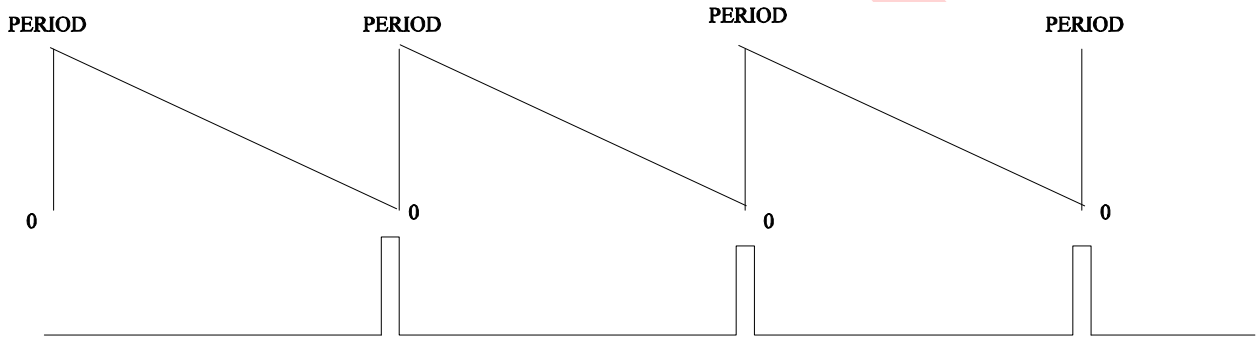

In left alignment mode, the counter starts from zero and increments to the peak value. Every time that the counter reaches the peak, an interrupt is generated by the digital modulator.

Figure 35-13. INTTYPE = ‘1’ Left Alignment Mode

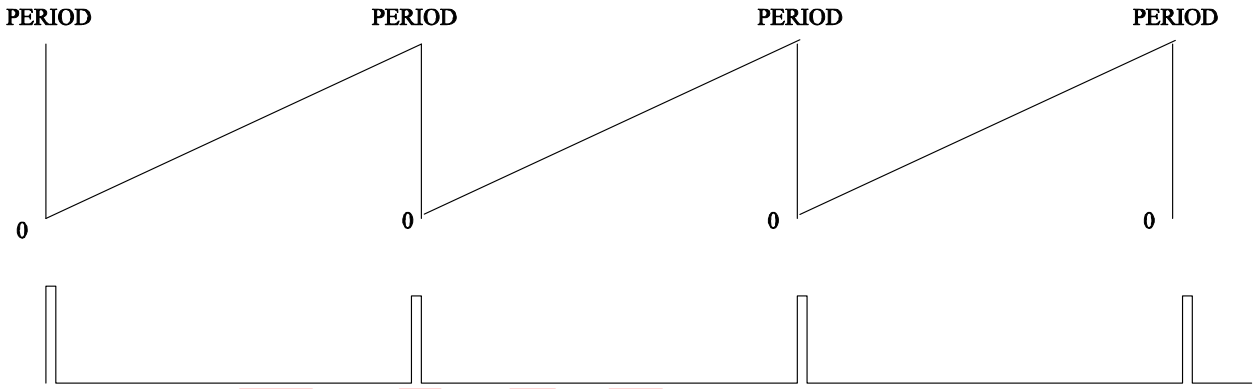

In center alignment mode, the counter decrements from the peak value to zero and then increments to the peak value again. The counter then decrements to zero and the cycle repeats endlessly.

The terminal count can be at the top or trough of this sawtooth waveform.

When the CENTRE_INT_LOC = ‘0’ (DPWMxPCFG[6] = 0), the terminal count is the trough and so the interrupt is generated by the digital modulator at the trough.

Figure 35-14. INTTYPE = ‘1’ Center Alignment Mode with CENTRE_INT_LOC = ‘0’

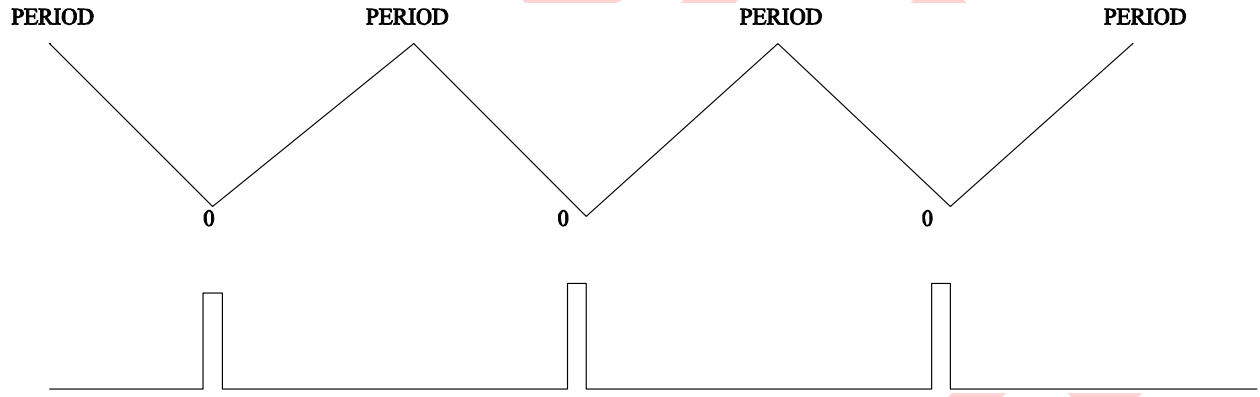

When CENTRE_INT_LOC = ‘1’ (DPWMxPCFG[6] = 1), the terminal count is at the peak and so the interrupt is generated by the digital modulator here.

Figure 35-15. INTTYPE = ‘1’ Center Alignment Mode with CENTRE_INT_LOC = ‘1’

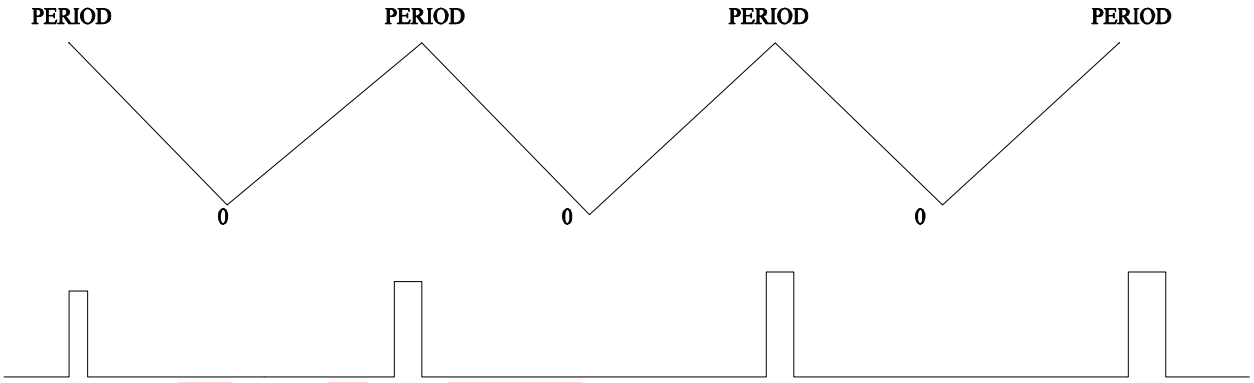

In PrISM mode, the pseudo-random counter cycles through the same pseudo-random sequence repeatedly. Every time the sequence wraps around, an interrupt is generated by the digital modulator.

When an interrupt is generated from a particular digital modulator block (for either value of INTTYPE), the bit in the DPWMINTFLAG register corresponding to that digital modulator is set, (if it has not been set already by a previously uncleared interrupt.).

Depending on the interrupt mask bits in the Digital Modulator Interrupt Mask register, DPWMINTMSK, and the Interrupt Controller Mask register, INT_MSK2, the interrupt on PWMHP and/or PWMLP in the INT_CLR2 register is set.

Note The interrupt controller can service only one high priority (HP) interrupt and one low priority (LP) interrupt at a time. Therefore, ensure that only two of the modulator blocks have their interrupts unmasked in DPWMINTMSK and one of them is an HP interrupt while the other is an LP interrupt. Not conforming to this rule could result in undesirable behavior.

To clear the interrupt generated from a particular digital modulator, the user must write a ‘1’ to the corresponding bit in the DPWMINTFLAG register.

PRELIMINARY

OBSOLETE

36. Gate Driver

This chapter explains the Gate Driver and its associated registers. For a complete table of the Gate Driver registers, refer to the “Power Peripherals Register Summary” on page 279. For a quick reference of all PowerPSoC registers in address order, refer to the Register Details chapter on page 361.

Figure 36-1shows the role and position of the Gate Driver (highlighted) in the entire power peripherals system. The power peripherals have been configured to drive LEDs in a floating load buck configuration using the internal FET with digital modulation and trip protection. In this system, the gate driver acts on the hysteretic controller's output to drive the gate of the internal FET.

Figure 36-1. Block Diagram Highlighting the Gate Driver

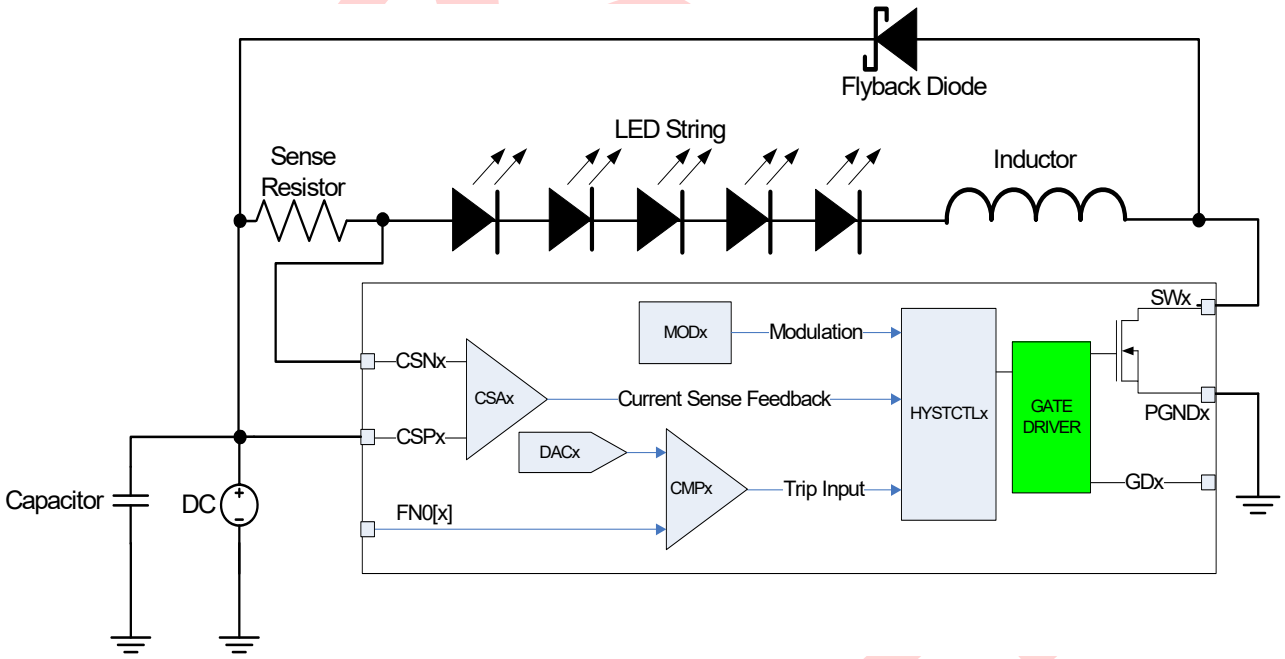

36.1 Architectural Description

The Gate Driver in the PowerPSoC family of devices is a simple CMOS buffer as shown in Figure 36-2. The gate driver is capable of driving either an internal or external power FET by setting the mode configuration bit in the Gate Driver Control Register (GDRVx_CR).

The gate driver has two outputs, out_int and out_ext. The out_int is used to drive the internal power FET and the out_ext is used to drive the external power FET. The INT control signal can be used to enable or disable the internal gate driver and the EXT control signal can be used to enable or disable the external gate driver. Upon power up, both INT and EXT control bits are at 0V forcing the entire low side gate driver block to be disabled where both out_int and out_ext are at logic 0 state.

Figure 36-2. Low Side Gate Driver

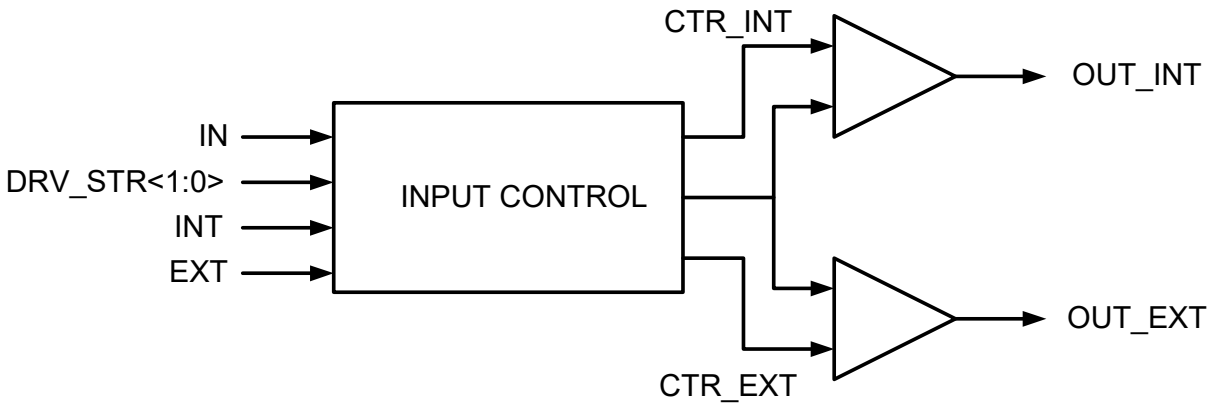

The input to the low side gate driver is from hysteretic control channel output. The drive strength for both the internal and external gate driver drive is configurable by setting various values of DRV_STR[1:0]. The default drive strength is highest and the value is set to ‘0’.

36.2 Application Description

There are a total of four channels (low side gate drivers) that provide output to the internal power FETs or drive the external power FETs. User firmware must not turn on both the internal and external gate drivers at the same time. Operation is not guaranteed in this mode. Each individual channel (gate driver) has its own drive strength setting and enable/disable setting as defined in the GDRV0_CR, GDRV1_CR, GDRV2_CR, and GDRV3_CR registers.

When both the internal and external gate driver outputs are enabled in a channel, no AC performance is guaranteed due to a potential access noise condition.

36.3 Register Definitions

The following registers are associated with the Gate Driver and are listed in address order. Each register description has an associated register table showing the bit structure for that register. For a complete table of Gate Driver registers, refer to the "Power Peripherals Register Summary" on page 279.

The bits that are grayed out throughout this manual are reserved bits and are not detailed in the register descriptions that follow. Reserved bits should always be written with a value of '0'.

36.3.1 GDRVx_CR Gate Driver Control Register

Add.	Name	Bit 7	Bit 6	Bit 5	Bit 4	Bit 3	Bit 2	Bit 1	Bit 0	Access
1,79h	GDRV0_CR					DRV_STR[1:0]		INT	EXT	RW : 0
1,7Bh	GDRV1_CR					DRV_STR[1:0]		INT	EXT	RW : 0
1,7Dh	GDRV2_CR					DRV_STR[1:0]		INT	EXT	RW : 0
1,7Fh	GDRV3_CR					DRV_STR[1:0]		INT	EXT	RW : 0

The Gate Driver Control Register (GDRVx_CR) is used to configure the gate driver.

Bits 3 to 2: DRV_STR[2:0].

'00' is the default drive strength for the gate driver.
'01' is **75%** of the default drive strength for the gate driver.
'10' is **50%** of the default drive strength for the gate driver.
'11' is **25%** of the default drive strength for the gate driver.

Bits 1 to 0: INT, EXT.

'00' disables the internal and external gate drivers with outputs pulled to ground.
'01' is external gate driver enabled to drive external FET.
'10' is internal gate driver enabled to drive internal FET.
'11' is both Internal and external gate drivers enabled.

Both internal and external gate drivers should not be enabled at the same time due to the noise concerns. No AC performance is guaranteed with this condition.

For additional information, refer to the GDRVx_CR register on page 491.

OBSOLETE

36.4 Timing Diagrams

The internal gate driver timing parameter is a composite timing measurement, where the delay time is measured from the input of the gate driver to the drain node of the power NFET. Figure 36-3 illustrates the measurement method and position. The rise and fall time is measured at the drain node of the drain-extended NFET.

Figure 36-3. Low Side Gate Driver and Drain-Extended NFET

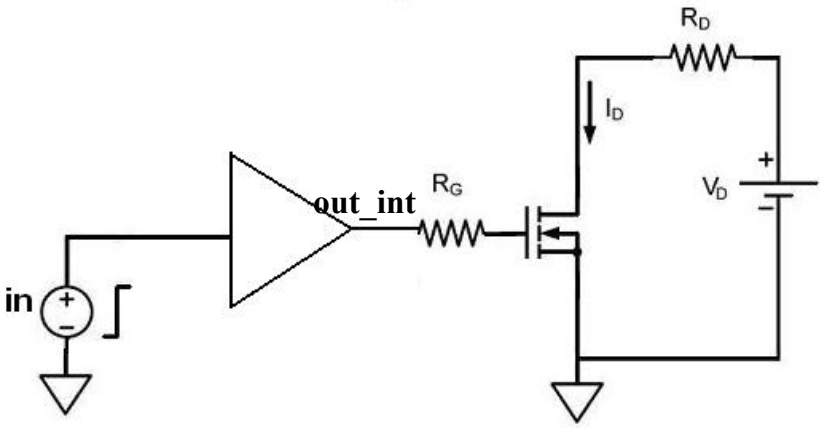

Figure 36-4. Internal Gate Driver Switching Parameters (Composite Timing)

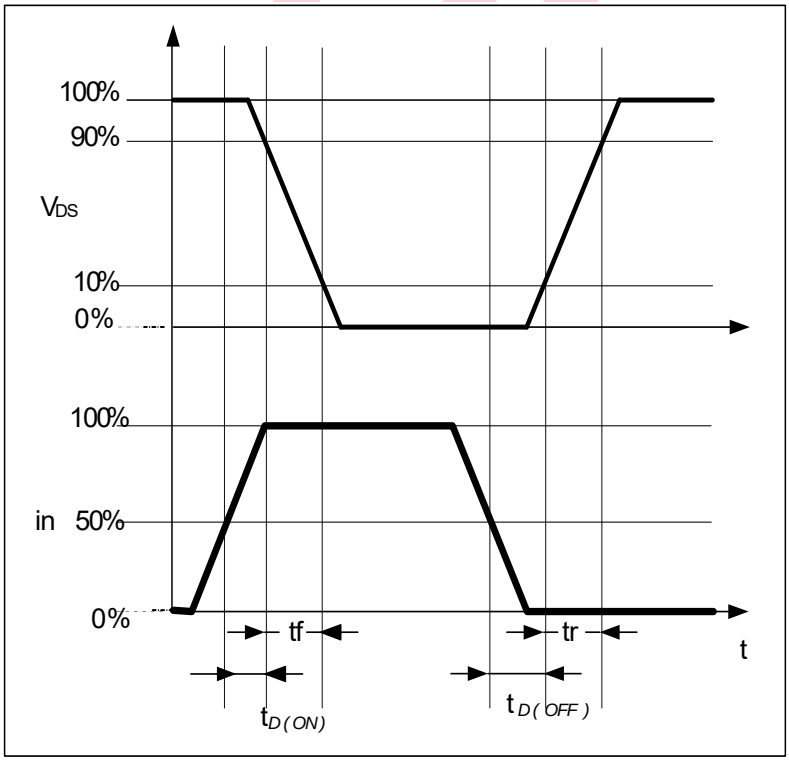

The external gate driver timing parameters are measured with 20 nC capacitive load. Delay time is measured from the input of the gate driver to the external output of the gate driver. The rise and fall time is measured at external output out_ext.

Figure 36-5. External Gate Driver Block Setup for Timing Measurement

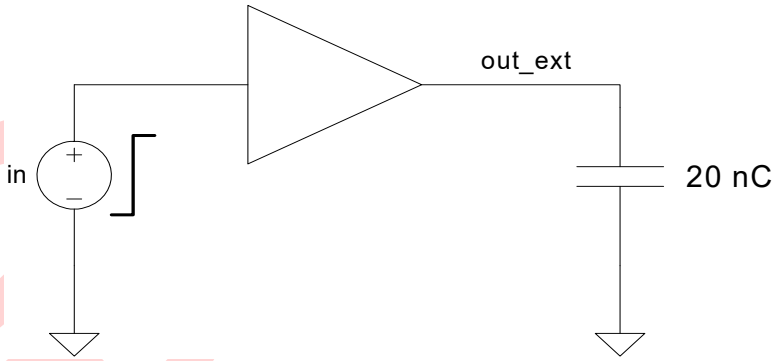

Figure 36-6. External Gate Driver Switching Parameters

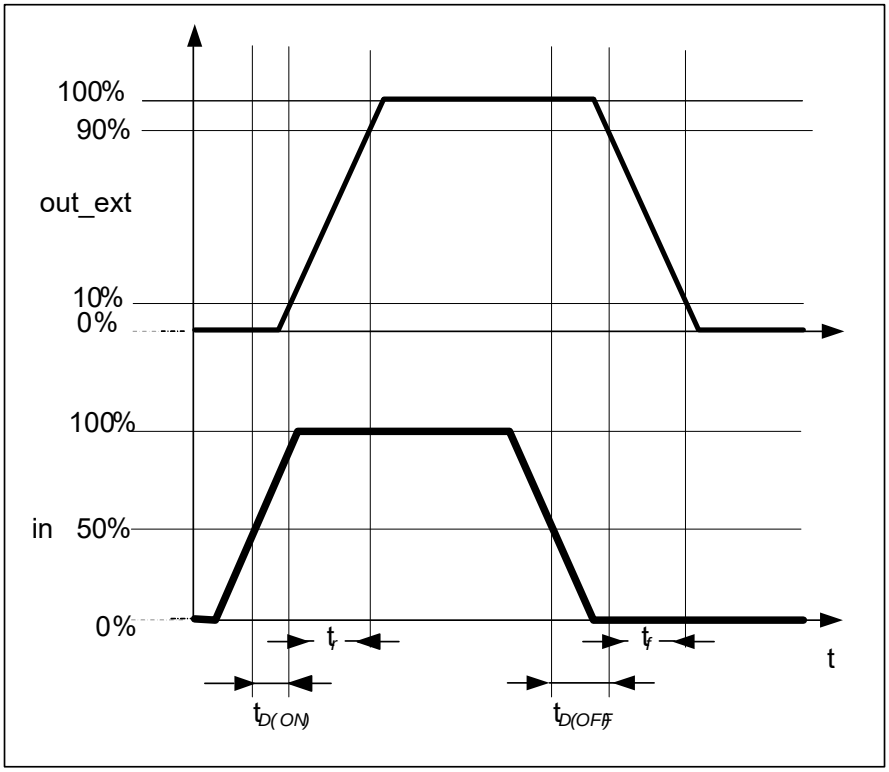

OBSOLETE

37. Power FET

This chapter explains the Power FET. For a quick reference of all PowerPSoC registers in address order, refer to the Register Details chapter on page 361.

Figure 37-1shows the role and position of the power FET (highlighted) in the entire power peripherals system. The power peripherals have been configured to drive LEDs in a floating load buck configuration using the internal FET with digital modulation and trip protection. The FET is controlled by the gate driver and performs the role of the switch in the LED drive system.

Figure 37-1. Block Diagram Highlighting the Power FET

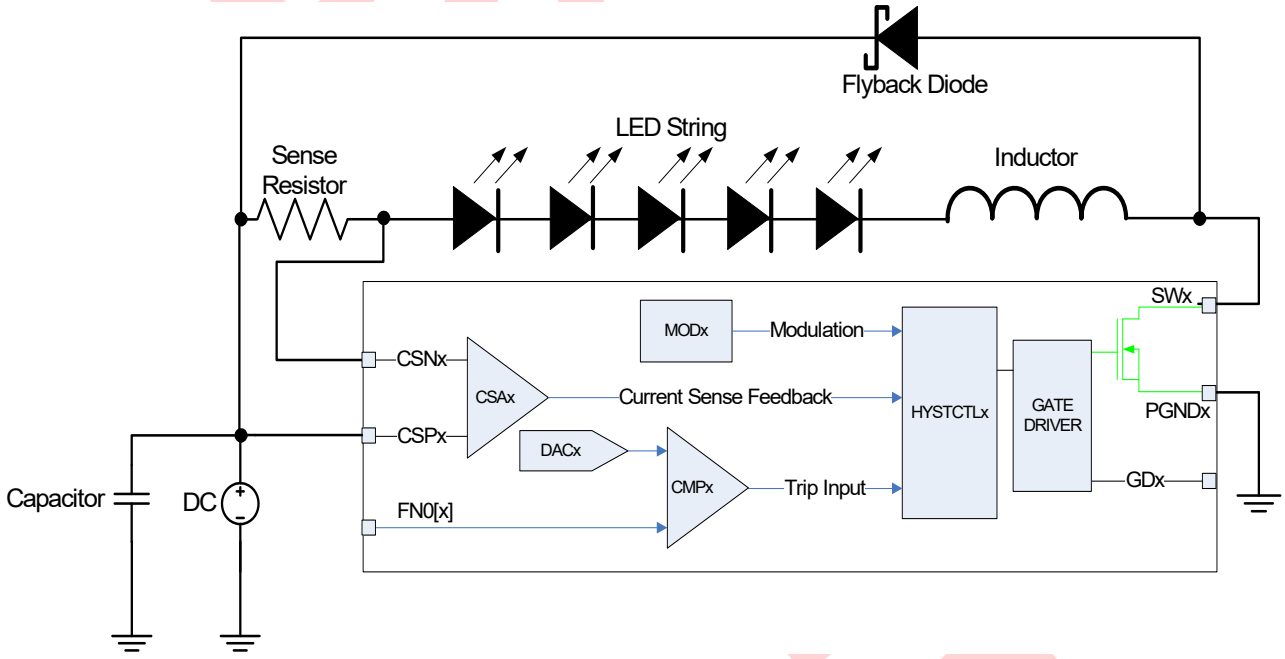

37.1 Architectural Description

The Power FET in the PowerPSoC family of devices is an array of drain-extended devices. These devices are rated at a maximum instantaneous drain-source voltage of 36V. The gate to source voltage is rated at 5.5V (maximum).

The Rds (on) for this FET is designed to be 0.5 Ω, which includes all the parasitic resistance due to power bussing on-chip, bondwire and package lead resistance. The parasitic resistance is estimated to be 100 mΩ for both source and drain terminals of a power FET. This power FET array is designed to support 1A continuous current with 3A peak repetitive current. The CY8CLED0xx0x device has one power FET for each channel present in the device.

37.2 Application Description

There are a total of four channels that use power FETs. The drain terminals of these power FETs are connected to the load (LEDs in case of LED drive applications).

37.3 Register Definitions

Not applicable.

37.4 Timing Diagrams

For details on power FET timing parameters see “Timing Diagrams” on page 348 in the Gate Driver chapter on page 345.

OBSOLETE

38. Switching Regulator

This chapter explains the Switching Regulator and its associated registers. For a complete table of the Switching Regulator registers, refer to the "Power Peripherals Register Summary" on page 279. For a quick reference of all PowerPSoC registers in address order, refer to the Register Details chapter on page 361.

38.1 Architectural Description

The CY8CLED0xx0x PowerPSoC device switching regulator in Figure 38-1 shows a peak current mode controlled buck regulator. Current mode control was chosen to ensure that a quick response time is possible.

Figure 38-1. Switching Regulator Current Mode Controlled Buck Regulator

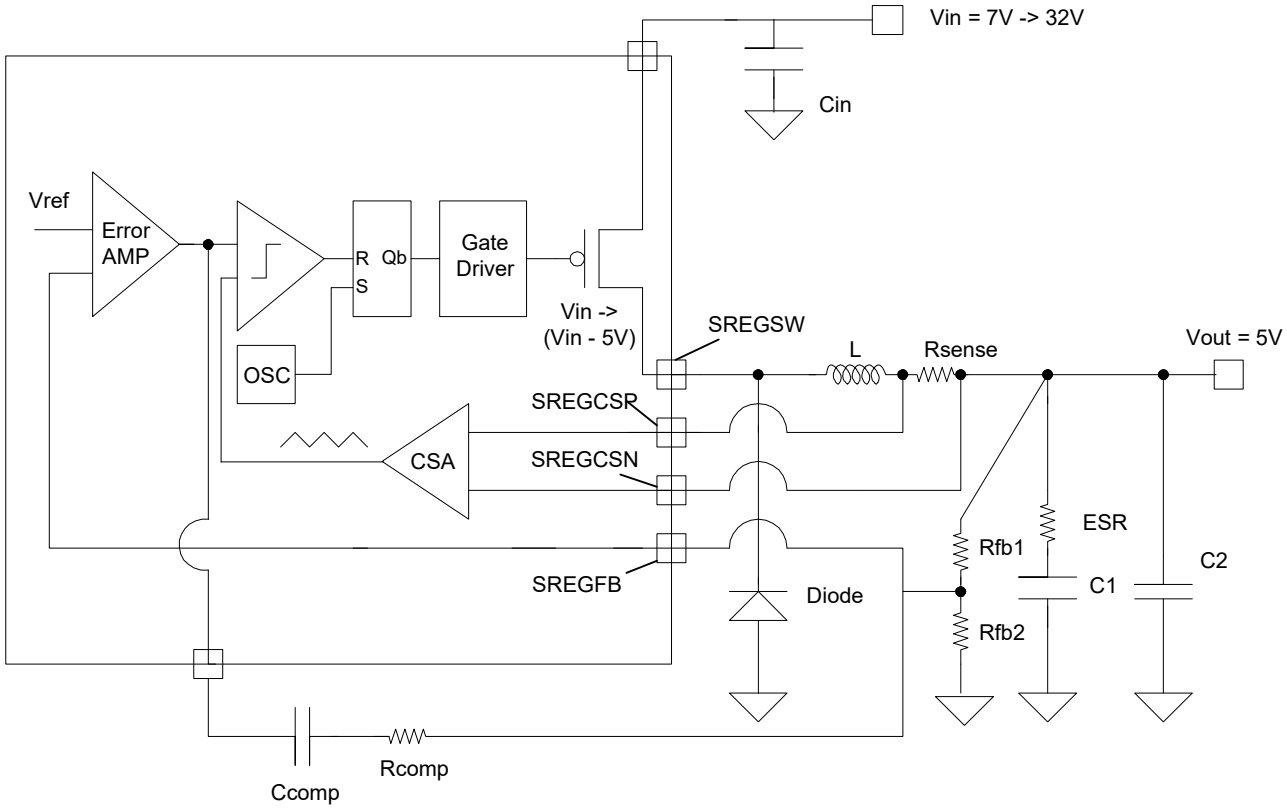

The external components required are detailed in Table 38-1.

Table 38-1. Regulator External Components

Component Name	Value
R_{fb1}	2 kΩ
R_{fb2}	0.698 kΩ
C_{comp}	2200 pF
R_{comp}	20 kΩ
L	47 µH
R_{sense}	0.5 Ω
C_1	10 µF; minimum ESR of 0.1 Ω
C_2	0.1 µF
C_{in}	1 µF
D1	40 V, 0.5 A

A lower value of Ccomp (<500 pF) is required to achieve a response time of 10 µs. However, for optimal loop robustness and control loop noise rejection, the recommended compensation network is Rcomp = 20 kΩ and Ccomp = 2200 pF. Make the ESR of the C1 at least 0.1Ω. If it is not, a 0.1Ω resistor should be added in series for stability. The regulator requires a reference voltage, which is to be supplied by the on-chip bandgap.

The compensation network will be type II, in which a PI controller is formed with the error amplifier, external Rcomp and Ccomp, and the Rfb1 and Rfb2 divider network.

The 32V PFET is currently designed for approximately 3.5Ω Rds_on.

An oscillator and ramp generator are required for the slope compensation and triggering the SR latch. Slope compensation is required for duty cycles greater than 50% for peak current mode controller to avoid sub-harmonic oscillation.

All reference and control signals run off the 5V supply, which the regulator generates. Therefore, a startup scheme is required in which the regulator circuitry, references, and clocks all run off a High Voltage (VHV)-generated 5V supply during the startup period. This causes the power consumption of the device to increase during startup. A signal from the PSoC core is required to tell the regulator when the bandgap/clocks, etc., have started up and the generated 5V supply is good. An internal low accuracy reference voltage generated from the VHV supply is required for startup.

The regulator should enter into a low current mode (power down) of operation when the PD_XH signal goes high. When this happens, switch the PFET OFF and tristate the output of PFET.

The regulator has an under voltage lockout circuit that turns off the PFET when the input voltage goes below approximately 6V.

38.1.1 Power Modes

Power Modes consist of active mode and power down mode.

Table 38-2. Power Modes

POR_XH_REG	PD_XH	Description	Constraints
0	0	Sleep Mode	Accuracy not as good as Active Mode.
1	0	Active Mode	NA
X	1	Power Down Mode	A 5V external supply is required to allow the regulator to enter and remain in Power Down Mode.

38.1.1.1 Active Mode

- The output is 5V sourcing current as defined in Application Description on page 356.
- The load current consists of the entire device (Power FET drivers, Power analog core and PSoC core).
- The reference voltage used is from the PowerPSoC trimmed bandgap circuit.
- The clock input is the 24 MHz trimmed internal oscillator from the PowerPSoC device.

38.1.1.2 Power Down Mode

- Power Down Mode can only be activated if the device is not being powered from the IP (i.e., has an external 5V supply provided by the user).
- The purpose of this mode is to turn OFF the PFET power switch and power down the LV circuitry to save current.
- The regulator enters Power Down Mode when the PD_XH pin is programmed to be high by the regulator register from the system bus.
- In addition, the pins must be set as follows to ensure a *safe state* for the regulator when not used:

SREGFB: 5V

SREGCSN: 5V

SREGCSP: 5V

SREGCOMP: Floating

SREGHVIN: >= VDD rail

SREGSW: Floating/Tie to SREGHVIN

Note If the switching regulator is disabled through wiring its input pins (as previously explained) then it must be disabled through software as well (bit SREG_TST[0] = 1, which is set in the Interconnect View of PSoC Designer™ 5.0). The change of mode (from active to off/sleep or off/sleep to active) should be done only when the HV supply is present and is between 7V and 32V.

38.1.1.3 Sleep Mode

Whenever the PSoC core is put to sleep (see Sleep and Watchdog chapter on page 93), the switching regulator must also be put to sleep by setting bit POR_XH_REG to 0 (see

OBSOLETE

38.3.1 SREG_TST Switching Regulator Test Register on page 356). In this mode, the regulator output voltage and ripple will not be as accurate as in active mode.

38.1.2 Interrupt

The under voltage detect circuit inside this block detects whenever the HV power supply falls below 6.0V, typically. Under this condition, it turns the output power FET off and also generates a UVLO (under voltage lockout) interrupt signal. There is approximately 500 mV of hysteresis in this circuit. The details of the interrupt mask and clear bits are explained in the Interrupt Controller chapter on page 71.

OBSOLETE

38.2 Application Description

The switching regulator is a switched mode buck regulator designed to take a high voltage (VHV) input voltage and output a 5V ± 5%. This 5V supply is then used to power all the internal circuitry of the PowerPSoC in a loop back mode.

The regulator circuitry itself runs from the generated 5V supply and therefore, requires a special startup scheme to be implemented. Also, the reference voltage for the regulator is derived from the PSoC core bandgap and therefore must be taken into consideration in the initialization sequence.

38.3 Register Definitions

The following register is associated with the Switching Regulator and is listed in address order. Each register description has an associated register table showing the bit structure for that register. For a complete table of Switching Regulator registers, refer to the "Summary Table of the Power Peripherals Registers" on page 279.

The bits that are grayed out throughout this manual are reserved bits and are not detailed in the register descriptions that follow. Reserved bits should always be written with a value of '0'.

38.3.1 SREG_TST Switching Regulator Test Register

Add.	Name	Bit 7	Bit 6	Bit 5	Bit 4	Bit 3	Bit 2	Bit 1	Bit 0	Access
1,DCh	SREG_TST		POR_XH_REG						PD_XH	RW : 0

The Switching Regulator Test Register (SREG_TST) is used for power down mode and sleep/active configuration of the switching regulator block.

Bit 6: POR_XH_REG, Bit 0: PD_XH.

'00' the regulator operates in sleep mode.

'10' the regulator operates in active mode.

'x1' the regulator operates in power down mode. A 5V external supply is required to allow the regulator to enter and remain in power down mode.

For additional information, refer to the SREG_TST register on page 501.

OBSOLETE

Section G: Register Reference

The Register Reference section discusses the registers of the PowerPSoC device. It lists all the registers in mapping tables, in address order. For easy reference, each register is linked to the page of a detailed description located in the next chapter. This section encompasses the following chapter:

- Register Details on page 361

Register General Conventions

The register conventions specific to this section and the Register Details chapter are listed in the following table.

Register Conventions

Convention	Description
Empty, grayed-out table cell	Illustrates a reserved bit or group of bits.
‘x’ before the comma in an address	Indicates the register exists in register bank 0 and register bank 1.
‘x’ in a register name	Indicates that there are multiple instances/address ranges of the same register.
R	Read register or bit(s)
W	Write register or bit(s)
L	Logical register or bit(s)
C	Clearable register or bit(s)
#	Access is bit specific

Register Naming Conventions

The register naming convention specific to this section for arrays of PSoC blocks and their registers is:

<Prefix>mn<Suffix>
where m=row index, n=column index

Therefore, ASD11CR3 is a register for an analog PSoC block in row 1 column 1.

Register Mapping Tables

The PowerPSoC device has a total register address space of 512 bytes. The register space is also referred to as I/O space and is broken into two parts. The XIO bit in the Flag register (CPU_F) determines which bank the user is currently in. When the XIO bit is set, the user is said to be in the “extended” address space or the “configuration” registers.

OBSOLETE

Register Map Bank 0 Table: User Space

Name	Addr (0,Hex)	Access	Page	Name	Addr (0,Hex)	Access	Page	Name	Addr (0,Hex)	Access	Page	Name	Addr (0,Hex)	Access	Page
PRT0DR	00	RW	363	DPWM0PCF	40	RW	378	ASC10CR0	80	RW	409	VDAC0_CR	C0	RW	417
PRT0IE	01	RW	364	DPWM0PDH	41	RW	379	ASC10CR1	81	RW	410	VDAC0_DR0	C1	RW	418
PRT0GS	02	RW	365	DPWM0PDL	42	RW	381	ASC10CR2	82	RW	411	VDAC0_DR1	C2	RW	419
PRT0DM2	03	RW	366	DPWM0PWH	43	RW	383	ASC10CR3	83	RW	412		C3		
PRT1DR	04	RW	363	DPWM0PWL	44	RW	384	ASD11CR0	84	RW	413	VDAC1_CR	C4	RW	417
PRT1IE	05	RW	364	DPWM0PCH	45	RW	385	ASD11CR1	85	RW	414	VDAC1_DR0	C5	RW	418
PRT1GS	06	RW	365	DPWM0PCL	46	RW	386	ASD11CR2	86	RW	415	VDAC1_DR1	C6	RW	419
PRT1DM2	07	RW	366	DPWM0GCFG	47	RW	387	ASD11CR3	87	RW	416		C7		
PRT2DR	08	RW	363	DPWM1PCF	48	RW	378		88			VDAC2_CR	C8	RW	417
PRT2IE	09	RW	364	DPWM1PDH	49	RW	379		89			VDAC2_DR0	C9	RW	418
PRT2GS	0A	RW	365	DPWM1PDL	4A	RW	381		8A			VDAC2_DR1	CA	RW	419
PRT2DM2	0B	RW	366	DPWM1PWH	4B	RW	383		8B				CB		
FN0DR	0C	RW	363	DPWM1PWL	4C	RW	384		8C			VDAC3_CR	CC	RW	417
FN0IE	0D	RW	364	DPWM1PCH	4D	RW	385		8D			VDAC3_DR0	CD	RW	418
FN0GS	0E	RW	365	DPWM1PCL	4E	RW	386		8E			VDAC3_DR1	CE	RW	419
FN0DM2	0F	RW	366	DPWM1GCFG	4F	RW	387		8F				CF		
	10			DPWM2PCF	50	RW	378	ASD20CR0	90	RW	413	CUR_PP	D0	RW	435
	11			DPWM2PDH	51	RW	379	ASD20CR1	91	RW	414	STK_PP	D1	RW	436
	12			DPWM2PDL	52	RW	381	ASD20CR2	92	RW	415		D2		
	13			DPWM2PWH	53	RW	383	ASD20CR3	93	RW	416	IDX_PP	D3	RW	437
	14			DPWM2PWL	54	RW	384	ASC21CR0	94	RW	409	MVR_PP	D4	RW	438
	15			DPWM2PCH	55	RW	385	ASC21CR1	95	RW	410	MVW_PP	D5	RW	439
	16			DPWM2PCL	56	RW	386	ASC21CR2	96	RW	411	I2C_CFG	D6	RW	440
	17			DPWM2GCFG	57	RW	387	ASC21CR3	97	RW	412	I2C_SCR	D7	#	441
PDMUX_S1	18	RW	367	DPWM3PCF	58	RW	378		98			I2C_DR	D8	RW	443
PDMUX_S2	19	RW	368	DPWM3PDH	59	RW	379		99			I2C_MSCR	D9	#	444
PDMUX_S3	1A	RW	369	DPWM3PDL	5A	RW	381		9A			INT_CLR0	DA	RW	445
PDMUX_S4	1B	RW	370	DPWM3PWH	5B	RW	383		9B			INT_CLR1	DB	RW	447
PDMUX_S5	1C	RW	371	DPWM3PWL	5C	RW	384	VDAC6_CR	9C	RW	417	INT_CLR2	DC	RW	449
PDMUX_S6	1D	RW	372	DPWM3PCH	5D	RW	385	VDAC6_DR0	9D	RW	418	INT_CLR3	DD	RW	451
	1E			DPWM3PCL	5E	RW	386	VDAC6_DR1	9E	RW	419	INT_MSK3	DE	RW	452
CHBOND_CR	1F	RW	373	DPWM3GCFG	5F	RW	387		9F			INT_MSK2	DF	RW	453
DBB00DR0	20	#	374	AMX_IN	60	RW	388	VDAC4_CR	A0	RW	417	INT_MSK0	E0	RW	454
DBB00DR1	21	W	375	AMUX_CFG	61	RW	389	VDAC4_DR0	A1	RW	418	INT_MSK1	E1	RW	455
DBB00DR2	22	RW	376		62			VDAC4_DR1	A2	RW	419	INT_VC	E2	RC	456
DBB00CR0	23	#	377	ARF_CR	63	RW	390		A3			RES_WDT	E3	W	457
DBB01DR0	24	#	374	CMP_CR0	64	#	391	VDAC5_CR	A4	RW	417	DEC_DH	E4	RC	458
DBB01DR1	25	W	375	ASY_CR	65	#	392	VDAC5_DR0	A5	RW	418	DEC_DL	E5	RC	459
DBB01DR2	26	RW	376	CMP_CR1	66	RW	393	VDAC5_DR1	A6	RW	419	DEC_CR0	E6	RW	460
DBB01CR0	27	#	377	PAMUX_S1	67	RW	394		A7			DEC_CR1	E7	RW	462
DCB02DR0	28	#	374	PAMUX_S2	68	RW	395	MUL1_X	A8	W	427	MUL0_X	E8	W	420
DCB02DR1	29	W	375	PAMUX_S3	69	RW	396	MUL1_Y	A9	W	421	MUL0_Y	E9	W	421
DCB02DR2	2A	RW	376	PAMUX_S4	6A	RW	397	MUL1_DH	AA	R	422	MUL0_DH	EA	R	422
DCB02CR0	2B	#	377		6B			MUL1_DL	AB	R	423	MUL0_DL	EB	R	423
DCB03DR0	2C	#	374	TMP_DR0	6C	RW	398	ACC1_DR1	AC	RW	424	ACC0_DR1	EC	RW	424
DCB03DR1	2D	W	375	TMP_DR1	6D	RW	398	ACC1_DR0	AD	RW	425	ACC0_DR0	ED	RW	425
DCB03DR2	2E	RW	376	TMP_DR2	6E	RW	398	ACC1_DR3	AE	RW	426	ACC0_DR3	EE	RW	426
DCB03CR0	2F	#	377	TMP_DR3	6F	RW	398	ACC1_DR2	AF	RW	427	ACC0_DR2	EF	RW	427
DBB10DR0	30	#	374	ACB00CR3	70	RW	399	RDI0RI	B0	RW	428		F0		
DBB10DR1	31	W	375	ACB00CR0	71	RW	400	RDI0SYN	B1	RW	429		F1		
DBB10DR2	32	RW	376	ACB00CR1	72	RW	402	RDI0IS	B2	RW	430		F2		
DBB10CR0	33	#	377	ACB00CR2	73	RW	404	RDI0LT0	B3	RW	431		F3		
DBB11DR0	34	#	374	ACB01CR3	74	RW	399	RDI0LT1	B4	RW	432		F4		
DBB11DR1	35	W	375	ACB01CR0	75	RW	400	RDI0RO0	B5	RW	433		F5		
DBB11DR2	36	RW	376	ACB01CR1	76	RW	402	RDI0RO1	B6	RW	434		F6		
DBB11CR0	37	#	377	ACB01CR2	77	RW	404		B7			CPU_F	F7	RL	464
DCB12DR0	38	#	374	DPWM0PCFG	78	RW	405	RDI1RI	B8	RW	428		F8		
DCB12DR1	39	W	375	DPWM1PCFG	79	RW	405	RDI1SYN	B9	RW	429		F9		
DCB12DR2	3A	RW	376	DPWM2PCFG	7A	RW	405	RDI1IS	BA	RW	430		FA		
DCB12CR0	3B	#	377	DPWM3PCFG	7B	RW	405	RDI1LT0	BB	RW	431		FB		
DCB13DR0	3C	#	374	DPWMINTFLG	7C	RW	406	RDI1LT1	BC	RW	432		FC		
DCB13DR1	3D	W	375	DPWMINTMSK	7D	RW	407	RDI1RO0	BD	RW	433	DAC_D	FD	RW	465
DCB13DR2	3E	RW	376	DPWMSYNC	7E	RW	408	RDI1RO1	BE	RW	434	CPU_SCR1	FE	#	466
DCB13CR0	3F	#	377		7F				BF			CPU_SCR0	FF	#	467

Gray fields are reserved. # Access is bit specific.

Register Map Bank 1 Table: User Space

Name	Addr (1,Hex)	Access	Page	Name	Addr (1,Hex)	Access	Page	Name	Addr (1,Hex)	Access	Page	Name	Addr (1,Hex)	Access	Page
PRT0DM0	00	RW	468	CSA0_CR	40	RW	478	ASC10CR0	80	RW	409	CMPCH0_CR	C0	RW	493
PRT0DM1	01	RW	469		41			ASC10CR1	81	RW	410	CMPCH2_CR	C1	RW	493
PRT0IC0	02	RW	470		42			ASC10CR2	82	RW	411	CMPCH4_CR	C2	RW	493
PRT0IC1	03	RW	471		43			ASC10CR3	83	RW	412	CMPCH6_CR	C3	RW	493
PRT1DM0	04	RW	468	CSA1_CR	44	RW	478	ASD11CR0	84	RW	413	CMPBNK8_CR	C4	RW	494
PRT1DM1	05	RW	469		45			ASD11CR1	85	RW	414	CMPBNK9_CR	C5	RW	494
PRT1IC0	06	RW	470		46			ASD11CR2	86	RW	415	CMPBNK10_CR	C6	RW	494
PRT1IC1	07	RW	471		47			ASD11CR3	87	RW	416	CMPBNK11_CR	C7	RW	494
PRT2DM0	08	RW	468	CSA2_CR	48	RW	478		88			CMPBNK12_CR	C8	RW	494
PRT2DM1	09	RW	469		49				89			CMPBNK13_CR	C9	RW	494
PRT2IC0	0A	RW	470		4A				8A				CA		
PRT2IC1	0B	RW	471		4B				8B				CB		
FN0DM0	0C	RW	468	CSA3_CR	4C	RW	478		8C				CC		
FN0DM1	0D	RW	469		4D				8D				CD		
FN0IC0	0E	RW	470		4E				8E				CE		
FN0IC1	0F	RW	471		4F				8F				CF		
	10				50			ASD20CR0	90	RW	413	GDI_O_IN	D0	RW	495
	11				51			ASD20CR1	91	RW	414	GDI_E_IN	D1	RW	496
	12				52			ASD20CR2	92	RW	415	GDI_O_OU	D2	RW	497
	13				53			ASD20CR3	93	RW	416	GDI_E_OU	D3	RW	498
	14				54			ASC21CR0	94	RW	409	HYSCTLR0CR	D4	RW	499
	15				55			ASC21CR1	95	RW	410	HYSCTLR1CR	D5	RW	499
	16				56			ASC21CR2	96	RW	411	HYSCTLR2CR	D6	RW	499
	17				57			ASC21CR3	97	RW	412	HYSCTLR3CR	D7	RW	499
	18				58				98			MUX_CR0	D8	RW	500
	19				59				99			MUX_CR1	D9	RW	500
	1A				5A				9A			MUX_CR2	DA	RW	500
	1B				5B				9B				DB		
	1C				5C				9C			SREG_TST	DC	RW	501
	1D				5D				9D			OSC_GO_EN	DD	RW	502
	1E				5E				9E			OSC_CR4	DE	RW	503
	1F				5F				9F			OSC_CR3	DF	RW	504
DBB00FN	20	RW	472	CLK_CR0	60	RW	479		A0			OSC_CR0	E0	RW	505
DBB00IN	21	RW	474	CLK_CR1	61	RW	480		A1			OSC_CR1	E1	RW	506
DBB00OU	22	RW	476	ABF_CR0	62	RW	481		A2			OSC_CR2	E2	RW	507
	23			AMD_CR0	63	RW	483		A3			VLT_CR	E3	RW	508
DBB01FN	24	RW	472	CMP_GO_EN	64	RW	484		A4			VLT_CMP	E4	R	509
DBB01IN	25	RW	474		65				A5				E5		
DBB01OU	26	RW	476	AMD_CR1	66	RW	485		A6				E6		
	27			ALT_CR0	67	RW	486		A7			DEC_CR2	E7	RW	510
DCB02FN	28	RW	472	ALT_CR1	68	RW	488		A8			IMO_TR	E8	RW	511
DCB02IN	29	RW	474	CLK_CR2	69	RW	489		A9			ILO_TR	E9	RW	512
DCB02OU	2A	RW	476		6A				AA			BDG_TR	EA	RW	513
	2B				6B				AB				EB		
DCB03FN	2C	RW	472	TMP_DR0	6C	RW	398		AC				EC		
DCB03IN	2D	RW	474	TMP_DR1	6D	RW	398		AD				ED		
DCB03OU	2E	RW	476	TMP_DR2	6E	RW	398		AE				EE		
	2F			TMP_DR3	6F	RW	398	AMUX_CLK	AF	RW			EF		
DBB10FN	30	RW	472	ACB00CR3	70	RW	399	RDI0RI	B0	RW	428		F0		
DBB10IN	31	RW	474	ACB00CR0	71	RW	400	RDI0SYN	B1	RW	429		F1		
DBB10OU	32	RW	476	ACB00CR1	72	RW	402	RDI0IS	B2	RW	430		F2		
	33			ACB00CR2	73	RW	404	RDI0LT0	B3	RW	431		F3		
DBB11FN	34	RW	472	ACB01CR3	74	RW	399	RDI0LT1	B4	RW	432		F4		
DBB11IN	35	RW	474	ACB01CR0	75	RW	400	RDI0RO0	B5	RW	433		F5		
DBB11OU	36	RW	476	ACB01CR1	76	RW	402	RDI0RO1	B6	RW	434		F6		
	37			ACB01CR2	77	RW	404		B7			CPU_F	F7	RL	464
DCB12FN	38	RW	472		78			RDI1RI	B8	RW	428		F8		
DCB12IN	39	RW	474	GDRV0_CR	79	RW	491	RDI1SYN	B9	RW	429		F9		
DCB12OU	3A	RW	476		7A			RDI1IS	BA	RW	430		FA		
	3B			GDRV1_CR	7B	RW	491	RDI1LT0	BB	RW	431		FB		
DCB13FN	3C	RW	472		7C			RDI1LT1	BC	RW	432		FC		
DCB13IN	3D	RW	474	GDRV2_CR	7D	RW	491	RDI1RO0	BD	RW	433	DAC_CR	FD	RW	514
DCB13OU	3E	RW	476		7E			RDI1RO1	BE	RW	434	CPU_SCR1	FE	#	466
	3F			GDRV3_CR	7F	RW	491		BF			CPU_SCR0	FF	#	467

Gray fields are reserved. # Access is bit specific.

OBSOLETE

39. Register Details

This chapter is a reference for all the CY8CLED0xx0x PowerPSoC device registers in address order, for Bank 0 and Bank 1. The most detailed descriptions of the PowerPSoC registers are in the Register Definitions section of each chapter. The registers that are in both banks are incorporated with the Bank 0 registers, designated with an 'x', rather than a '0' preceding the comma in the address. Bank 0 registers are listed first and begin on page 363. Bank 1 registers are listed second and begin on page 468. A condensed view of all the registers is shown in the "Register Map Bank 0 Table: User Space" on page 358 and the "Register Map Bank 1 Table: User Space" on page 359.

39.1 Maneuvering Around the Registers

For ease-of-use, this chapter has been formatted so that there is one register per page, although some registers use two pages. On each page, from top to bottom, there are four sections:

1. Register name and address (from lowest to highest).
2. Register table showing the bit organization, with reserved bits grayed out.
3. Written description of register specifics or links to additional register information.
4. Detailed register bit descriptions.

PowerPSoC Device Characteristics

PSoC Part Number	Digital I/O	Digital Rows	Digital Blocks	Analog Inputs	Analog Outputs	Analog Columns	Analog Blocks
CY8CLED0xx0x	14	2	8	14	2	2	6

Reserved bits are grayed table cells and are not described in the bit description section. Reserved bits should always be written with a value of '0'.

OBSOLETE

Register Conventions

The following table lists the register conventions that are specific to this chapter.

Register Conventions

Convention	Example	Description
'x' in a register name	ACBxxCR1	Multiple instances/address ranges of the same register
R	R : 00	Read register or bit(s)
W	W : 00	Write register or bit(s)
L	RL : 00	Logical register or bit(s)
C	RC : 00	Clearable register or bit(s)
00	RW : 00	Reset value is 0x00 or 00h
XX	RW : XX	Register is not reset
0,	0,04h	Register is in bank 0
1,	1,23h	Register is in bank 1
x,	x,F7h	Register exists in register bank 0 and register bank 1
Empty, grayed-out table cell		Reserved bit or group of bits, unless otherwise stated

39.1.1 Register Naming Conventions

There are a few register naming conventions used in this manual to abbreviate repetitious register information by using a lower case 'x' in the register name. The convention to interpret these register names is as follows.

- For all registers, an 'x' before the comma in the address field indicates that the register can be accessed or written to no matter what bank is used. For example, the M8C flag register's (CPU_F) address is 'x,F7h' meaning it is located in bank 0 and bank 1 at F7h.
- For digital block registers, the first 'x' in some register names represents either "B" for basic or "C" for communication. For rows of digital PSoC blocks and their registers, the second 'x' set represents <Prefix>mn<Suffix>, where m=row index, n=column index. Therefore, DCB11CR0 (written DxBxxCR0) is a digital communication register for a digital PSoC block in row 1 column 1.
- For digital row registers, the 'x' in the digital register's name represents the digital row index. For example, the RDIxIS register name encompasses two registers: one for each digital row index and unique address (RDI0IS, RDI1IS).
- For analog column registers, the naming convention for the switched capacitor and continuous time registers and their arrays of PSoC blocks is <Prefix>mn<Suffix>, where m=row index, n=column index. Therefore, ASC11CR2 (written ASCxxCR2) is a register for an analog PSoC block in row 1 column 1

OBSOLETE

39.2 Bank 0 Registers

The following registers are all in bank 0 and are listed in address order. An ‘x’ before the comma in the register’s address indicates that the register can be accessed independent of the XIO bit in the CPU_F register. Registers that are in both Bank 0 and Bank 1 are listed in address order in Bank 0. For example, the RDIxLT1 register has an address of x,B4h and is in both Bank 0 and Bank 1.

39.2.1 FN0DR/PRTxDR

Port Data Register

Individual Register Names and Addresses:

PRT0DR : 0,00h PRT1DR : 0,04h PRT2DR : 0,08h FN0DR : 0,0Ch

	7	6	5	4	3	2	1	0
Access : POR	RW : 00							
Bit Name	Data[7:0]							

This register allows for write or read access of the current logical equivalent of the voltage on the pin.

Any bit that is not available for a port, this register will return the last data bus value when read and should be masked off prior to using this information. For additional information, refer to the “Register Definitions” on page 83 in the GPIO chapter.

Bit	Name	Description
7:0	**Data[7:0]**	Write value to port or read value from port. Reads return the state of the pin, not the value in the FN0DR/PRTxDR register.

OBSOLETE

39.2.2 FN0IE/PRTxIE

Port Interrupt Enable Register

Individual Register Names and Addresses:

PRT0IE : 0,01h PRT1IE : 0,05h PRT2IE : 0,09h FN0IE : 0,0Dh

	7	6	5	4	3	2	1	0
Access : POR	RW : 00							
Bit Name	Interrupt Enables[7:0]							

This register is used to enable or disable the interrupt enable internal to the GPIO block.

Any bit that is not available for a port, this register will return the last data bus value when read and should be masked off prior to using this information. For additional information, refer to the “Register Definitions” on page 83 in the GPIO chapter.

Bit	Name	Description
7:0	**Interrupt Enables[7:0]**	A bit set in this register will enable the corresponding port pin interrupt. 0 Port pin interrupt disabled for the corresponding pin. 1 Port pin interrupt enabled for the corresponding pin.

OBSOLETE

39.2.3 FN0GS/PRTxGS

Port Global Select Register

Individual Register Names and Addresses:

PRT0GS : 0,02h PRT1GS : 0,06h PRT2GS : 0,0Ah FN0GS : 0,0Eh

	7	6	5	4	3	2	1	0
Access : POR	RW : 00							
Bit Name	Global Select[7:0]							

This register is used to select the block for connection to global inputs or outputs.

Any bit that is not available for a port, this register will return the last data bus value when read and should be masked off prior to using this information. For additional information, refer to the “Register Definitions” on page 83 in the GPIO chapter.

Bit	Name	Description
7:0	**Global Select[7:0]**	A bit set in this register will connect the corresponding port pin to an internal global bus. This connection is used to input or output digital signals to or from the digital blocks. 0 Global function disabled. The pin value is determined by the FN0DR/PRTxDR bit value and port configuration registers. 1 Global function enabled. Direction depends on mode bits for the pin (registers FN0DM0/PRTxDM0, FN0DM1/PRTxDM1, and FN0DM2/PRTxDM2).

OBSOLETE

39.2.4 FN0DM2/PRTxDM2

Port Drive Mode Bit 2 Register

Individual Register Names and Addresses:

PRT0DM2 : 0,03h PRT1DM2 : 0,07h PRT2DM2 : 0,0Bh FN0DM2 : 0,0Fh

	7	6	5	4	3	2	1	0
Access : POR	RW : FF							
Bit Name	Drive Mode 2[7:0]							

This register is one of three registers whose combined value determines the unique Drive mode of each bit in a GPIO port.

In this register, there are eight possible drive modes for each port pin. Three mode bits are required to select one of these modes, and these three bits are spread into three different registers (the FN0DM0/PRTxDM0 register on page 468, the FN0DM1/PRTxDM1 register on page 469, and the FN0DM2/PRTxDM2 register). The bit position of the affected port pin (for example, Pin[2] in Port 0) is the same as the bit position of each of the three drive mode register bits that control the Drive mode for that pin (for example: FN0DM0/PRT0DM0[2], FN0DM1/PRT0DM1[2], and FN0DM2/PRT0DM2[2]). The three bits from the three registers are treated as a group. These are referred to as DM2, DM1, and DM0, or together as DM[2:0].

All Drive mode bits are shown in the sub-table below ([**2**10] refers to the combination (in order) of bits in a given bit position); however, this register only controls the ***most significant bit (MSb)*** of the Drive mode.

Any bit that is not available for a port, this register will return the last data bus value when read and should be masked off prior to using this information. For additional information, refer to the "Register Definitions" on page 83 in the GPIO chapter.

Bit	Name	Description
7:0	**Drive Mode 2[7:0]**	Bit 2 of the Drive mode, for each pin of an 8-bit GPIO port.

[210]	Pin Output High	Pin Output Low	Notes
000b	Strong	Resistive	
001b	Strong	Strong	
010b	High Z	High Z	Digital input enabled.
011b	Resistive	Strong	
100b	Slow + strong	High Z	
101b	Slow + strong	Slow + strong	
110b	High Z	High Z	Reset state. Digital input disabled for zero power.
111b	High Z	Slow + strong	I2C Compatible mode.

Note A bold digit, in the table above, signifies that the digit is used in this register.

OBSOLETE

39.2.5 PDMUX_S1

Power Digital MUX Select Register 1

Individual Register Names and Addresses:

PDMUX_S1 : 0,18h

	7	6	5	4	3	2	1	0
Access : POR			RW : 0			RW : 0		
Bit Name			HYST_DIM1[2:0]			HYST_DIM0[2:0]		

This register is used to multiplex various digital inputs (coming out of the digital modulator block or FN0) onto dimming input of hysteretic controller channel 0 and channel 1. Details are provided in the Hysteretic Controller chapter on page 313. In the table above, note that reserved bits are grayed table cells and are not described in the bit description section below. Reserved bits should always be written with a value of '0'.

Bits [5:3] are not applicable for the CY8CLED01D01 (single channel PowerPSoC) device.

Bit	Name	Description	
5:3	**HYST_DIM1[2:0]**	000	DPWM1 input is multiplexed to Output HYST_DIM1
		001	DPWM2 input is multiplexed to Output HYST_DIM1
		010	DPWM3 input is multiplexed to Output HYST_DIM1
		011	DPWM0 input is multiplexed to Output HYST_DIM1
		100	FN0[0] input is multiplexed to Output HYST_DIM1
		101	FN0[1] input is multiplexed to Output HYST_DIM1
		110	FN0[2] input is multiplexed to Output HYST_DIM1
		111	FN0[3] input is multiplexed to Output HYST_DIM1
2:0	**HYST_DIM0[2:0]**	000	DPWM0 input is multiplexed to Output HYST_DIM0
		001	DPWM1 input is multiplexed to Output HYST_DIM0
		010	DPWM2 input is multiplexed to Output HYST_DIM0
		011	DPWM3 input is multiplexed to Output HYST_DIM0
		100	FN0[0] input is multiplexed to Output HYST_DIM0
		101	FN0[1] input is multiplexed to Output HYST_DIM0
		110	FN0[2] input is multiplexed to Output HYST_DIM0
		111	FN0[3] input is multiplexed to Output HYST_DIM0

Note DPWM3 is not present in CY8CLED01D01 (1 channel PowerPSoC), CY8CLED02D01 (2 channel PowerPSoC) and CY8CLED03D/G0x (3 channel PowerPSoC) devices.

DPWM2 is not present in CY8CLED01D01 (1 channel PowerPSoC) and CY8CLED02D01 (2 channel PowerPSoC) devices.

DPWM1 is not present in CY8CLED01D01 (1 channel PowerPSoC) device.

OBSOLETE

39.2.6 PDMUX_S2

Power Digital MUX Select Register 2

Individual Register Names and Addresses:

PDMUX_S2 : 0,19h

	7	6	5	4	3	2	1	0
Access : POR			RW : 0			RW : 0		
Bit Name			HYST_DIM3[2:0]			HYST_DIM2[2:0]		

This register is used to multiplex various digital inputs (coming out of the digital modulator block or FN0) onto dimming input of hysteretic controller channel 2 and channel 3. Details are provided in the Hysteretic Controller chapter on page 313. In the table above, note that reserved bits are grayed table cells and are not described in the bit description section below. Reserved bits should always be written with a value of '0'.

This register is not applicable for the CY8CLED02D01 (2 channel PowerPSoC) and CY8CLED01D01 (1 channel PowerPSoC) devices. Bits [5:3] are not applicable for the CY8CLED03D/G0x (3 channel PowerPSoC) devices.

Bit	Name		Description
5:3	**HYST_DIM3[2:0]**	000	DPWM3 input is multiplexed to Output HYST_DIM3
		001	DPWM0 input is multiplexed to Output HYST_DIM3
		010	DPWM1 input is multiplexed to Output HYST_DIM3
		011	DPWM2 input is multiplexed to Output HYST_DIM3
		100	FN0[0] input is multiplexed to Output HYST_DIM3
		101	FN0[1] input is multiplexed to Output HYST_DIM3
		110	FN0[2] input is multiplexed to Output HYST_DIM3
		111	FN0[3] input is multiplexed to Output HYST_DIM3
2:0	**HYST_DIM2[2:0]**	000	DPWM2 input is multiplexed to Output HYST_DIM2
		001	DPWM3 input is multiplexed to Output HYST_DIM2
		010	DPWM0 input is multiplexed to Output HYST_DIM2
		011	DPWM1 input is multiplexed to Output HYST_DIM2
		100	FN0[0] input is multiplexed to Output HYST_DIM2
		101	FN0[1] input is multiplexed to Output HYST_DIM2
		110	FN0[2] input is multiplexed to Output HYST_DIM2
		111	FN0[3] input is multiplexed to Output HYST_DIM2

Note DPWM3 is not present in CY8CLED01D01 (1 channel PowerPSoC), CY8CLED02D01 (2 channel PowerPSoC) and CY8CLED03D/G0x (3 channel PowerPSoC) devices.

DPWM2 is not present in CY8CLED01D01 (1 channel PowerPSoC) and CY8CLED02D01 (2 channel PowerPSoC) devices.

DPWM1 is not present in CY8CLED01D01 (1 channel PowerPSoC) device.

PRELIMINARY

39.2.7 PDMUX_S3

Power Digital MUX Select Register 3

Individual Register Names and Addresses:

PDMUX_S3 : 0,1Ah

	7	6	5	4	3	2	1	0
Access : POR	RW : 0				RW : 0			
Bit Name	HYST_TRIP1[3:0]				HYST_TRIP0[3:0]			

This register is used to multiplex various digital inputs (coming out of the comparator bank or FN0) onto trip input of hysteretic controller channel 0 and channel 1. Details are provided in the Hysteretic Controller chapter on page 313.

Bits [7:4] are not applicable for the CY8CLED01D01 (1 channel PowerPSoC) device.

Bit	Name	Description
7:4	**HYST_TRIP1[3:0]**	000 CMP_OUT9 input is multiplexed to HYST_TRIP1 001 CMP_OUT10 input is multiplexed to HYST_TRIP1 010 CMP_OUT11 input is multiplexed to HYST_TRIP1 011 CMP_OUT8 input is multiplexed to HYST_TRIP1 100 CMP_OUT12 input is multiplexed to HYST_TRIP1 101 CMP_OUT13 input is multiplexed to HYST_TRIP1 110 FN0[0] input is multiplexed to HYST_TRIP1 111 FN0[1] input is multiplexed to HYST_TRIP1 1000 FN0[2] input is multiplexed to HYST_TRIP1 1001 FN0[3] input is multiplexed to HYST_TRIP1 ‘1010’ to ‘1111’ tied to VGND
3:0	**HYST_TRIP0[3:0]**	000 CMP_OUT8 input is multiplexed to HYST_TRIP0 001 CMP_OUT9 input is multiplexed to HYST_TRIP0 010 CMP_OUT10 input is multiplexed to HYST_TRIP0 011 CMP_OUT11 input is multiplexed to HYST_TRIP0 100 CMP_OUT12 input is multiplexed to HYST_TRIP0 101 CMP_OUT13 input is multiplexed to HYST_TRIP0 110 FN0[0] input is multiplexed to HYST_TRIP0 111 FN0[1] input is multiplexed to HYST_TRIP0 1000 FN0[2] input is multiplexed to HYST_TRIP0 1001 FN0[3] input is multiplexed to HYST_TRIP0 ‘1010’ to ‘1111’ tied to VGND

OBSOLETE

39.2.8 PDMUX_S4

Power Digital MUX Select Register 4

Individual Register Names and Addresses:

PDMUX_S4 : 0,1Bh

	7	6	5	4	3	2	1	0
Access : POR	RW : 0				RW : 0			
Bit Name	HYST_TRIP3[3:0]				HYST_TRIP2[3:0]			

This register is used to multiplex various digital inputs (coming out of the comparator bank or FN0) onto trip input of hysteretic controller channel 2 and channel 3. Details are provided in the Hysteretic Controller chapter on page 313.

This register is not applicable for the CY8CLED02D01 (2 channel PowerPSoC) and the CY8CLED01D01 (1 channel PowerPSoC) devices. Bits [7:4] are not applicable for the CY8CLED03D/G0x (3 channel PowerPSoC) device.

Bit	Name	Description
7:4	**HYST_TRIP3[3:0]**	000 CMP_OUT11 input is multiplexed to HYST_TRIP3 001 CMP_OUT8 input is multiplexed to HYST_TRIP3 010 CMP_OUT9 input is multiplexed to HYST_TRIP3 011 CMP_OUT10 input is multiplexed to HYST_TRIP3 100 CMP_OUT12 input is multiplexed to HYST_TRIP3 101 CMP_OUT13 input is multiplexed to HYST_TRIP3 110 FN0[0] input is multiplexed to HYST_TRIP3 111 FN0[1] input is multiplexed to HYST_TRIP3 1000 FN0[2] input is multiplexed to HYST_TRIP3 1001 FN0[3] input is multiplexed to HYST_TRIP3 ‘1010’ to ‘1111’ tied to VGND
3:0	**HYST_TRIP2[3:0]**	000 CMP_OUT10 input is multiplexed to HYST_TRIP2 001 CMP_OUT11 input is multiplexed to HYST_TRIP2 010 CMP_OUT8 input is multiplexed to HYST_TRIP2 011 CMP_OUT9 input is multiplexed to HYST_TRIP2 100 CMP_OUT12 input is multiplexed to HYST_TRIP2 101 CMP_OUT13 input is multiplexed to HYST_TRIP2 110 FN0[0] input is multiplexed to HYST_TRIP2 111 FN0[1] input is multiplexed to HYST_TRIP2 1000 FN0[2] input is multiplexed to HYST_TRIP2 1001 FN0[3] input is multiplexed to HYST_TRIP2 ‘1010’ to ‘1111’ tied to VGND

OBSOLETE

39.2.9 PDMUX_S5

Power Digital MUX Select Register 5

Individual Register Names and Addresses:

PDMUX_S5 : 0,1Ch

	7	6	5	4	3	2	1	0
Access : POR	RW : 0				RW : 0			
Bit Name	GPIO1_SEL[3:0]				GPIO0_SEL[3:0]			

This register multiplexes various digital inputs (coming out of the comparator bank or digital modulator) to FN0.

Bit	Name	Description
7:4	**GPIO1_SEL[3:0]**	0000 CMP_OUT9 input is multiplexed to FN0[1] 0001 CMP_OUT10 input is multiplexed to FN0[1] 0010 CMP_OUT11 input is multiplexed to FN0[1] 0011 CMP_OUT8 input is multiplexed to FN0[1] 0100 CMP_OUT12 input is multiplexed to FN0[1] 0101 CMP_OUT13 input is multiplexed to FN0[1] 0110 DPWM0 input is multiplexed to FN0[1] 0111 DPWM1 input is multiplexed to FN0[1] 1000 DPWM2 input is multiplexed to FN0[1] 1001 DPWM3 input is multiplexed to FN0[1] 1010 Reserved 1011 Reserved 1100 Reserved 1101 Reserved 1110 Reserved ‘1111’ tied to Vgnd
3:0	**GPIO0_SEL[3:0]**	0000 CMP_OUT8 input is multiplexed to FN0[0] 0001 CMP_OUT9 input is multiplexed to FN0[0] 0010 CMP_OUT10 input is multiplexed to FN0[0] 0011 CMP_OUT11 input is multiplexed to FN0[0] 0100 CMP_OUT12 input is multiplexed to FN0[0] 0101 CMP_OUT13 input is multiplexed to FN0[0] 0110 DPWM0 input is multiplexed to FN0[0] 0111 DPWM1 input is multiplexed to FN0[0] 1000 DPWM2 input is multiplexed to FN0[0] 1001 DPWM3 input is multiplexed to FN0[0] 1010 Reserved 1011 Reserved 1100 Reserved 1101 Reserved ‘1110’ to ‘1111’ tied to Vgnd

Note DPWM3 is not present in CY8CLED01D01 (1 channel PowerPSoC), CY8CLED02D01 (2 channel PowerPSoC) and CY8CLED03D/G0x (3 channel PowerPSoC) devices.

DPWM2 is not present in CY8CLED01D01 (1 channel PowerPSoC) and CY8CLED02D01 (2 channel PowerPSoC) devices.

DPWM1 is not present in CY8CLED01D01 (1 channel PowerPSoC) devices.

OBSOLETE

39.2.10 PDMUX_S6

Power Digital MUX Select Register 6

Individual Register Names and Addresses:

PDMUX_S6 : 0,1Dh

	7	6	5	4	3	2	1	0
Access : POR	RW : 0				RW :0			
Bit Name	GPIO3_SEL[3:0]				GPIO2_SEL[3:0]			

This register multiplexes various digital inputs (coming out of the comparator bank or digital modulator) to FN0.

Bit	Name	Description
7:4	**GPIO3_SEL[3:0]**	0000 CMP_OUT11 input is multiplexed to FN0[3] 0001 CMP_OUT8 input is multiplexed to FN0[3] 0010 CMP_OUT9 input is multiplexed to FN0[3] 0011 CMP_OUT10 input is multiplexed to FN0[3] 0100 CMP_OUT12 input is multiplexed to FN0[3] 0101 CMP_OUT13 input is multiplexed to FN0[3] 0110 DPWM0 input is multiplexed to FN0[3] 0111 DPWM1 input is multiplexed to FN0[3] 1000 DPWM2 input is multiplexed to FN0[3] 1001 DPWM3 input is multiplexed to FN0[3] 1010 Reserved 1011 Reserved 1100 Reserved 1101 Reserved ‘1110’ to ‘1111’ tied to Vgnd
3:0	**GPIO2_SEL[3:0]**	0000 CMP_OUT10 input is multiplexed to FN0[2] 0001 CMP_OUT11 input is multiplexed to FN0[2] 0010 CMP_OUT8 input is multiplexed to FN0[2] 0011 CMP_OUT9 input is multiplexed to FN0[2] 0100 CMP_OUT12 input is multiplexed to FN0[2] 0101 CMP_OUT13 input is multiplexed to FN0[2] 0110 DPWM0 input is multiplexed to FN0[2] 0111 DPWM1 input is multiplexed to FN0[2] 1000 DPWM2 input is multiplexed to FN0[2] 1001 DPWM3 input is multiplexed to FN0[2] 1010 Reserved 1011 Reserved 1100 Reserved 1101 Reserved 1110 Reserved ‘1111’ tied to Vgnd

Note DPWM3 is not present in CY8CLED01D01 (1 channel PowerPSoC), CY8CLED02D01 (2 channel PowerPSoC) and CY8CLED03D/G0x (3 channel PowerPSoC) devices.

DPWM2 is not present in CY8CLED01D01 (1 channel PowerPSoC) and CY8CLED02D01 (2 channel PowerPSoC) devices.

DPWM1 is not present in CY8CLED01D01 (1 channel PowerPSoC) devices.

OBSOLETE

39.2.11 CHBOND_CR

Hysteretic Channel Bonding Control Register

Individual Register Names and Addresses:

CHBOND_CR : 0,1Fh

	7	6	5	4	3	2	1	0
Access : POR	RW : 0		RW : 0		RW : 0		RW : 0	
Bit Name	MUX_CH3__SEL[1:0]		MUX_CH2__SEL[1:0]		MUX_CH1__SEL[1:0]		MUX_CHO__SEL[1:0]	

This register is used for hysteretic controller channel bonding.

Note Bits [7:6] are not applicable for the CY8CLED01D01 (1 channel PowerPSoC), CY8CLED02D01 (2 channel PowerPSoC) and CY8CLED03D/G0x (3 channel PowerPSoC) devices.

Bits [5:4] are not applicable for CY8CLED01D01 (1 channel PowerPSoC), CY8CLED02D01 (2 channel PowerPSoC) devices.

Bits [3:2] are not applicable for the CY8CLED01D01 (1 channel PowerPSoC) device.

Bit	Name	Description	
7:6	**MUX_CH3_SEL[1:0]**	00	Hysteretic Channel 3 muxed to Hyst_ch_out[3]
		01	Hysteretic Channel 0 muxed to Hyst_ch_out[3]
		10	Hysteretic Channel 1 muxed to Hyst_ch_out[3]
		11	Hysteretic Channel 2 muxed to Hyst_ch_out[3]
5:4	**MUX_CH2_SEL[1:0]**	00	Hysteretic Channel 2 muxed to Hyst_ch_out[2]
		01	Hysteretic Channel 3 muxed to Hyst_ch_out[2]
		10	Hysteretic Channel 0 muxed to Hyst_ch_out[2]
		11	Hysteretic Channel 1 muxed to Hyst_ch_out[2]
3:2	**MUX_CH1_SEL[1:0]**	00	Hysteretic Channel 1 muxed to Hyst_ch_out[1]
		01	Hysteretic Channel 2 muxed to Hyst_ch_out[1]
		10	Hysteretic Channel 3 muxed to Hyst_ch_out[1]
		11	Hysteretic Channel 0 muxed to Hyst_ch_out[1]
1:0	**MUX_CH0_SEL[1:0]**	00	Hysteretic Channel 0 muxed to Hyst_ch_out[0]
		01	Hysteretic Channel 1 muxed to Hyst_ch_out[0]
		10	Hysteretic Channel 2 muxed to Hyst_ch_out[0]
		11	Hysteretic Channel 3 muxed to Hyst_ch_out[0]

Note Hysteretic channel 3 is not present in CY8CLED01D01 (1 channel PowerPSoC), CY8CLED02D01 (2 channel PowerPSoC) and CY8CLED03D/G0x (3 channel PowerPSoC) devices.

Hysteretic channel 2 is not present in CY8CLED01D01 (1 channel PowerPSoC) and CY8CLED02D01 (2 channel PowerPSoC) devices.

Hysteretic channel 1 is not present in CY8CLED01D01 (1 channel PowerPSoC) device.

OBSOLETE

39.2.12 DxBxxDR0

Digital Basic/Communication Type B Block Data Register 0

Individual Register Names and Addresses:

DBB00DR0 : 0,20h	DBB01DR0 : 0,24h	DCB02DR0 : 0,28h	DCB03DR0 : 0,2Ch
DBB10DR0 : 0,30h	DBB11DR0 : 0,34h	DCB12DR0 : 0,38h	DCB13DR0 : 0,3Ch

	7	6	5	4	3	2	1	0
Access : POR	R : 00							
Bit Name	Data[7:0]							

This register is the digital block data register.

The use of this register depends upon which function is selected. This selection is made in the FN[2:0] bits of the DxBxxFN register on page 472. (For the timer, counter, dead band, and CRCPRS functions, a read of the DxBxxDR0 register returns 00h and transfers DxBxxDR0 to DxBxxDR2.)

The naming convention for the digital basic/communication and control registers is as follows. The first 'x' in the digital register's name represents either "B" for basic or "C" for communication. For rows of digital PSoC blocks and their registers, the second 'x' set represents <Prefix>mn<Suffix>, where m=row index, n=column index. Therefore, DBB11DR0 is a digital basic register for a digital PSoC block in row 1 column 1. For additional information, refer to the "Register Definitions" on page 133 in the digital blocks chapter.

Bit	Name	Description
7:0	**Data[7:0]**	Data for selected function.

Block Function	Register Function	DCB Only
Timer	Count Value	No
Counter	Count Value	No
Dead Band	Count Value	No
CRCPRS	LFSR *	No
SPIM	Shifter	Yes
SPIS	Shifter	Yes
TXUART	Shifter	Yes
RXUART	Shifter	Yes

* ***Linear Feedback Shift Register (LFSR)***

OBSOLETE

39.2.13 DxBxxDR1

Digital Basic/Communication Type B Block Data Register 1

Individual Register Names and Addresses:

DBB00DR1 : 0,21h	DBB01DR1 : 0,25h	DCB02DR1 : 0,29h	DCB03DR1 : 0,2Dh
DBB10DR1 : 0,31h	DBB11DR1 : 0,35h	DCB12DR1 : 0,39h	DCB13DR1 : 0,3Dh

	7	6	5	4	3	2	1	0
Access : POR	W : 00							
Bit Name	Data[7:0]							

This register is the data register for a digital block.

The use of this register is dependent on which function is selected for its block. This selection is made in the FN[2:0] bits of the DxBxxFN register on page 472. Refer to the DxBxxDR0 register on page 374 for naming convention and digital row availability information. For additional information, refer to the "Register Definitions" on page 133 in the Digital Blocks chapter.

Bit	Name	Description
7:0	Data[7:0]	Data for selected function.

Block Function	Register Function	DCB Only
Timer	Period	No
Counter	Period	No
Dead Band	Period	No
CRCPRS	Polynomial	No
SPIM	TX Buffer	Yes
SPIS	TX Buffer	Yes
TXUART	TX Buffer	Yes
RXUART	Not applicable	Yes

OBSOLETE

39.2.14 DxBxxDR2

Digital Basic/Communication Type B Block Data Register 2

Individual Register Names and Addresses:

DBB00DR2 : 0,22h	DBB01DR2 : 0,26h	DCB02DR2 : 0,2Ah	DCB03DR2 : 0,2Eh
DBB10DR2 : 0,32h	DBB11DR2 : 0,36h	DCB12DR2 : 0,3Ah	DCB13DR2 : 0,3Eh

	7	6	5	4	3	2	1	0
Access : POR	RW* : 00							
Bit Name	Data[7:0]							

This register is the data register for a digital block.

The use of this register is dependent on which function is selected for its block. This selection is made in the FN[2:0] bits of the DxBxxFN register on page 472. Refer to the DxBxxDR0 register on page 374 for naming convention and digital row availability information. For additional information, refer to the "Register Definitions" on page 133 in the Digital Blocks chapter.

* If the block is configured as SPIM, SPIS, or RXUART, this register is read only.

Bit	Name	Description
7:0	Data[7:0]	Data for selected function.

Block Function	Register Function	DCB Only
Timer	Capture/Compare	No
Counter	Compare	No
Dead Band	Buffer	No
CRCPRS	Seed/Residue	No
SPIM	RX Buffer	Yes
SPIS	RX Buffer	Yes
TXUART	Not applicable	Yes
RXUART	RX Buffer	Yes

OBSOLETE

39.2.15 DxBxxCR0 (Timer Control)

Digital Basic/Communication Type B Block Control Register 0

Individual Register Names and Addresses:

DBB00CR0 : 0,23h
DBB10CR0 : 0,33h
DBB01CR0 : 0,27h
DBB11CR0 : 0,37h
DCB02CR0 : 0,2Bh
DCB12CR0 : 0,3Bh
DCB03CR0 : 0,2Fh
DCB13CR0 : 0,3Fh

	7	6	5	4	3	2	1	0
Access : POR						RW : 0	RW : 0	RW : 0
Bit Name						TC Pulse Width	Capture Int	Enable

This register is the Control register for a timer, if the DxBxxFN register is configured as a '000'.

Refer to the DxBxxDR0 register on page 374 for naming convention. In the table above, note that reserved bits are grayed table cells and are not described in the bit description section below. Reserved bits should always be written with a value of '0'. For additional information, refer to the "Register Definitions" on page 133 in the Digital Blocks chapter.

Bit	Name	Description
2	**TC Pulse Width**	Primary output 0 Terminal Count pulse width is one-half a block clock. Supports a period value of 00h. 1 Terminal Count pulse width is one full block clock.
1	**Capture Int**	0 Interrupt is selected with Mode bit 0 in the Function (DxBxxFN) register. 1 Block interrupt is caused by a hardware ***capture*** event (overrides Mode bit 0 selection).
0	**Enable**	0 Timer is not enabled. 1 Timer is enabled.

OBSOLETE

39.2.16 DPWMx_PCF

Programmable Clock Frequency Scalar Register

Individual Register Names and Addresses:

DPWM0_PCF : 0,40h DPWM1_PCF : 0,48h DPWM2_PCF : 0,50h DPWM3_PCF : 0,58h

	7	6	5	4	3	2	1	0
Access : POR	RW : 00							
Bit Name	PCF[7:0]							

This register configures the clock scalar for digital modulator block. This allows the incoming DPWM_CLOCK (either the full rate SYSCLKx2, 48 MHz, or the half rate SYSLCK, 24 MHz) to be scaled down by a factor of PCF+1 to a frequency which, when combined with a selected Period register value, sets the DPWM_OUT output frequency.

Bit	Name	Description
7:0	**PCF[7:0]**	Programmable Clock Frequency Scalar. These 8 bits configure the clock scalar. This allows the incoming DPWM_CLOCK (either the full rate SYSCLKx2, 48 MHz, or the half rate SYSLCK, 24 MHz) to be scaled down by a factor of PCF+1 to a frequency which, when combined with a selected Period register value, sets the DPWM_OUT output.

Note Register DPWM3_PCF is not applicable for the CY8CLED01D01 (1 channel PowerPSoC), CY8CLED02D01 (2 channel PowerPSoC) and the CY8CLED03D/G0x (3 channel PowerPSoC) devices.

Register DPWM2_PCF is not applicable for the CY8CLED01D01 (1 channel PowerPSoC), CY8CLED02D01 (2 channel PowerPSoC) devices.

Register DPWM1_PCF is not applicable for the CY8CLED01D01 (1 channel PowerPSoC) device.

OBSOLETE

39.2.17 DPWMx_PDH

High Byte of the 16-Bit Period Register

Individual Register Names and Addresses:

DPWM0_PDH : 0,41h DPWM1_PDH : 0,49h DPWM2_PDH : 0,51h DPWM3_PDH : 0,59h

Note Register DPWM3_PDH is not applicable for the CY8CLED01D01 (1 channel PowerPSoC), CY8CLED02D01 (2 channel PowerPSoC) and the CY8CLED03D/G0x (3 channel PowerPSoC) devices.

Register DPWM2_PDH is not applicable for the CY8CLED01D01 (1 channel PowerPSoC), CY8CLED02D01 (2 channel PowerPSoC) devices.

Register DPWM1_PDH is not applicable for the CY8CLED01D01 (1 channel PowerPSoC) device.

	7	6	5	4	3	2	1	0
Access : POR	RW : 00							
Bit Name	Period[15:8]							

The High Byte of 16-Bit Period Register and Low Byte of the 16-Bit Period Register (DPWMxPDH, DPWMxPDL) combine to form the 16-bit Period register for the digital modulator block. These registers have a different function depending on the mode of operation of the digital modulator block.

This is a 16-bit register. The rules governing the updates of this 16-bit register are as follows:

- The user can update the low byte of the register in isolation (i.e., without writing to the high byte).
- The user cannot update the high byte of the register in isolation (i.e., without writing to the low byte).
- When the user wishes to update all 16 bits of the register, they write the high byte first and then the low byte second.
- The digital modulator block expects that after a write to the high byte of the register, the next write is to the low byte of the register.

Bit	Name	Description
7:0	**Period[15:8]**	1. When in PWM Mode, this register forms the counter which, when compared to the value in the Pulse Width register, allows the generation of the PWM output signal. PWM MODE: PERIOD[15:0] = Period. 2. When in PrISM Mode, this register forms the basis for the pseudo random counter. PrISM MODE: PERIOD[15:0] = PrISM Polynomial Value.

(continued on next page)

OBSOLETE

39.2.17 DPWMx_PDH *(continued)*

Specific PrISM polynomial values for each resolution are set out in the following table. If users write a value other than these polynomials, the digital modulator block defaults to 12-bit resolution PrISM operation.

Table 39-1. PrISM Polynomial Values

Resolution	PrISM Polynomial Value (Hex)
2-Bit Resolution	0x03
3-Bit Resolution	0x06
4-Bit Resolution	0x0C
5-Bit Resolution	0x1E
6-Bit Resolution	0x39
7-Bit Resolution	0x72
8-Bit Resolution	0xb8
9-Bit Resolution	0x134
10-Bit Resolution	0x2c2
11-Bit Resolution	0x524
12-Bit Resolution	0XCA0
13-Bit Resolution	0x1B00
14-Bit Resolution	0x3802
15-Bit Resolution	0x5280
16-Bit Resolution	0xD008

3. When in DMM Mode, this register has a maximum limit of 12 bits (PERIOD [11:0]). The 4 most significant bits [15:12] should be set to ‘0’.
DMM MODE: PERIOD[15:12] = PERIOD; PERIOD[15:12] = 4'b0000.

OBSOLETE

39.2.18 DPWMx_PDL

Low Byte of the 16-Bit Period Register

Individual Register Names and Addresses:

DPWM0_PDL : 0,42h DPWM1_PDL : 0,4Ah DPWM2_PDL : 0,52h DPWM3_PDL : 0,5Ah

Note Register DPWM3_PDL is not applicable for the CY8CLED01D01 (1 channel PowerPSoC), CY8CLED02D01 (2 channel PowerPSoC) and the CY8CLED03D/G0x (3 channel PowerPSoC) devices.

Register DPWM2_PDL is not applicable for the CY8CLED01D01 (1 channel PowerPSoC), CY8CLED02D01 (2 channel PowerPSoC) devices.

Register DPWM1_PDL is not applicable for the CY8CLED01D01 (1 channel PowerPSoC) device.

	7	6	5	4	3	2	1	0
Access : POR	RW : 00							
Bit Name	Period[7:0]							

The High Byte of 16-Bit Period Register and Low Byte of the 16-Bit Period Register (DPWMxPDH, DPWMxPDL) combine to form the 16-bit Period register for the digital modulator block. These registers have a different function depending on the mode of operation of the digital modulator block.

This is a 16-bit register. The rules governing the updates of this 16-bit register are as follows:

- The user can update the low byte of the register in isolation (i.e., without writing to the high byte).
- The user cannot update the high byte of the register in isolation (i.e., without writing to the low byte).
- When the user wishes to update all 16 bits of the register, they write the high byte first and then the low byte second.
- The digital modulator block expects that after a write to the high byte of the register, the next write is to the low byte of the register.

Bit	Name	Description
7:0	**Period[7:0]**	1. When in PWM Mode, this register forms the counter which, when compared to the value in the Pulse Width register, allows the generation of the PWM output signal. PWM MODE: PERIOD[15:0] = Period. 2. When in PrISM Mode, this register forms the basis for the pseudo random counter. PrISM MODE: PERIOD[15:0] = PrISM Polynomial Value.

(continued on next page)

OBSOLETE

39.2.18 DPWMx_PDL *(continued)*

Specific PrISM polynomial values for each resolution are set out in the following table. If users write a value other than these polynomials, the digital modulator block defaults to 12-bit resolution PrISM operation.

Table 39-2. PrISM Polynomial Values

Resolution	PrISM Polynomial Value (Hex)
2-Bit Resolution	0x03
3-Bit Resolution	0x06
4-Bit Resolution	0x0C
5-Bit Resolution	0x1E
6-Bit Resolution	0x39
7-Bit Resolution	0x72
8-Bit Resolution	0xb8
9-Bit Resolution	0x134
10-Bit Resolution	0x2c2
11-Bit Resolution	0x524
12-Bit Resolution	0XCA0
13-Bit Resolution	0x1B00
14-Bit Resolution	0x3802
15-Bit Resolution	0x5280
16-Bit Resolution	0xD008

3. When in DMM Mode, this register has a maximum limit of 12 bits (PERIOD [11:0]). The 4 most significant bits [15:12] should be set to ‘0’.
DMM MODE: PERIOD[15:12] = PERIOD; PERIOD[15:12] = 4'b0000.

OBSOLETE

39.2.19 DPWMx_PWH

High Byte of the 16-Bit Pulse Width Register

Individual Register Names and Addresses:

DPWM0_PWH : 0,43h DPWM1_PWH : 0,4Bh DPWM2_PWH : 0,53h DPWM3_PWH : 0,5Bh

Note Register DPWM3_PWH is not applicable for the CY8CLED01D01 (1 channel PowerPSoC), CY8CLED02D01 (2 channel PowerPSoC) and the CY8CLED03D/G0x (3 channel PowerPSoC) devices.

Register DPWM2_PWH is not applicable for the CY8CLED01D01 (1 channel PowerPSoC), CY8CLED02D01 (2 channel PowerPSoC) devices.

Register DPWM1_PWH is not applicable for the CY8CLED01D01 (1 channel PowerPSoC) device.

	7	6	5	4	3	2	1	0
Access : POR	RW : 00							
Bit Name	PW[15:8]							

The High Byte of the 16-Bit Pulse Width Register and Low Byte of the 16-Bit Pulse Width Register (DPWMxPWH, DPWMx-PWL) combine to form the 16-bit Pulse Width register for the digital modulator block. These registers have a different function depending on the mode of operation of the digital modulator block.

This is a 16-bit register. The rules governing the updates of this 16-bit register are as follows:

- The user can update the low byte of the register in isolation (i.e., without writing to the high byte).
- The user cannot update the high byte of the register in isolation (i.e., without writing to the low byte).
- When the user wishes to update all 16 bits of the register, they must write the high byte first and then the low byte second.
- The digital modulator block expects that after a write to the high byte of the register, the next write is to the low byte of the register.

Bit	Name	Description
7:0	**PW[15:8]**	This register has a different function depending on the modes of operation of the digital modulator block. 1. When in PWM Mode, this register forms the Pulse Width register which, when compared to the value in the down counter, allows the generation of the PWM output signal. PWM MODE: PW[15:0] = Pulse Width. 2. When in PrISM Mode, this register forms the basis for the Duty Cycle register PrISM MODE: PW[15:0] = Pulse Width. 3. When in DMM Mode, this register is split into two fields. PW[15:4] is the pulse width that is compared with the counter. PW[3:0] is the fractional pulse width. DMM MODE: PW[15:4] = Pulse Width; PW[3:0] = Fraction of the Pulse Width.

preliminary

39.2.20 DPWMx_PWL

Low Byte of the 16-Bit Pulse Width Register

Individual Register Names and Addresses:

DPWM0_PWL : 0,44h DPWM1_PWL : 0,4Ch DPWM2_PWL : 0,54h DPWM3_PWL : 0,5Ch

Note Register DPWM3_PWL is not applicable for the CY8CLED01D01 (1 channel PowerPSoC), CY8CLED02D01 (2 channel PowerPSoC) and the CY8CLED03D/G0x (3 channel PowerPSoC) devices.

Register DPWM2_PWL is not applicable for the CY8CLED01D01 (1 channel PowerPSoC), CY8CLED02D01 (2 channel PowerPSoC) devices.

Register DPWM1_PWL is not applicable for the CY8CLED01D01 (1 channel PowerPSoC) device.

	7	6	5	4	3	2	1	0
Access : POR	RW : 00							
Bit Name	PW[7:0]							

The High Byte of the 16-Bit Pulse Width Register and Low Byte of the 16-Bit Pulse Width Register (DPWMxPWH, DPWMx-PWL) combine to form the 16-bit Pulse Width register for the digital modulator block. These registers have a different function depending on the mode of operation of the digital modulator block.

This is a 16-bit register. The rules governing the updates of this 16-bit register are as follows:

- The user can update the low byte of the register in isolation (i.e., without writing to the high byte).
- The user cannot update the high byte of the register in isolation (i.e., without writing to the low byte).
- When the user wishes to update all 16 bits of the register, they must write the high byte first and then the low byte second.
- The digital modulator block expects that after a write to the high byte of the register, the next write is to the low byte of the register.

Bit	Name	Description
7:0	**PW[7:0]**	1. When in PWM Mode, this register forms the Pulse Width register which, when compared to the value in the down counter, allows the generation of the PWM output signal. PWM MODE: DPWMxPWM[15:0] = Pulse Width 2. When in PrISM Mode, this register forms the basis for the Duty Cycle register. PrISM MODE: PW[15:0] = Pulse Width 3. When in DMM Mode, this register is split into two fields. PW[15:4] is the effective DMM pulse width and is compared against the counter. PW[3:0] is the fractional pulse width. DMM MODE: PW[15:4] = Pulse Width; PW[3:0] = Fraction of the Pulse Width

OBSOLETE

39.2.21 DPWMx_PCH

High Byte of the 16-Bit Phase Control Register

Individual Register Names and Addresses:

DPWM0_PCH : 0,45h DPWM1_PCH : 0,4Dh DPWM2_PCH : 0,55h DPWM3_PCH : 0,5Dh

Note Register DPWM3_PCH is not applicable for the CY8CLED01D01 (1 channel PowerPSoC), CY8CLED02D01 (2 channel PowerPSoC) and the CY8CLED03D/G0x (3 channel PowerPSoC) devices.

Register DPWM2_PCH is not applicable for the CY8CLED01D01 (1 channel PowerPSoC), CY8CLED02D01 (2 channel PowerPSoC) devices.

Register DPWM1_PCH is not applicable for the CY8CLED01D01 (1 channel PowerPSoC) device.

	7	6	5	4	3	2	1	0
Access : POR	RW : 00							
Bit Name	PC[15:8]							

The High Byte of 16-Bit Phase Control Register and Low Byte of 16-Bit Phase Control Register (DPWMxPCH, DPWMxPCL) combine to form the 16-bit Phase Control register. These registers are used during SYNC MODE operation of the digital modulator block.

This is a 16-bit register. The rules governing the updates of this 16-bit register are as follows:

- The user can update the low byte of the register in isolation (i.e., without writing to the high byte).
- The user cannot update the high byte of the register in isolation (i.e., without writing to the low byte).
- When the user wishes to update all 16 bits of the register, they must write the high byte first and then the low byte second.
- The digital modulator block expects that after a write to the high byte of the register, the next write is to the low byte of the register.

Bit	Name	Description
7:0	**PC[15:8]**	The DPWMxPCH and DPWMxPCL registers combine to form the 16-bit Phase Control register. This register can only be used in SYNCMODE. This is a mode that uses up to four digital modulator blocks in a parallel configuration. When in SYNC MODE, this register can be used only for PWM and DMM modes. The user MUST NOT write to the Phase register when in PrISM mode. To do so will cause unexpected results. SYNC MODE allows the user to offset the output pulses of up to three slave digital modulator blocks with respect to a master digital modulator.

PRELIMINARY

39.2.22 DPWMx_PCL

Low Byte of the 16-Bit Phase Control Register

Individual Register Names and Addresses:

DPWM0_PCL : 0,46h DPWM1_PCL : 0,4Eh DPWM2_PCL : 0,56h DPWM3_PCL : 0,5Eh

Note Register DPWM3_PCL is not applicable for the CY8CLED01D01 (1 channel PowerPSoC), CY8CLED02D01 (2 channel PowerPSoC) and the CY8CLED03D/G0x (3 channel PowerPSoC) devices.

Register DPWM2_PCL is not applicable for the CY8CLED01D01 (1 channel PowerPSoC), CY8CLED02D01 (2 channel PowerPSoC) devices.

Register DPWM1_PCL is not applicable for the CY8CLED01D01 (1 channel PowerPSoC) device.

	7	6	5	4	3	2	1	0
Access : POR	RW : 00							
Bit Name	PC[7:0]							

The High Byte of 16-Bit Phase Control Register and Low Byte of 16-Bit Phase Control Register (DPWMxPCH, DPWMxPCL) combine to form the 16-bit Phase Control register. These registers are used during SYNC MODE operation of the digital modulator block.

This is a 16-bit register. The rules governing the updates of this 16-bit register are as follows:

- The user can update the low byte of the register in isolation (i.e., without writing to the high byte).
- The user cannot update the high byte of the register in isolation (i.e., without writing to the low byte).
- When the user wishes to update all 16 bits of the register, they must write the high byte first and then the low byte second.
- The digital modulator block expects that after a write to the high byte of the register, the next write is to the low byte of the register.

Bit	Name	Description
7:0	**PC[7:0]**	The DPWMxPCH and DPWMxPCL registers combine to form the 16-bit Phase Control register. This register can only be used in SYNC MODE. This is a mode that uses up to four digital modulator blocks in a parallel configuration. When in SYNC MODE, this register can be used only for PWM and DMM modes. The user MUST NOT write to the Phase register when in PrISM mode. To do so will cause unexpected results. SYNC MODE allows the user to offset the output pulses of up to three slave digital modulator blocks with respect to a master digital modulator.

OBSOLETE

39.2.23 DPWMx_GCFG

Digital PWM General Configuration Register

Individual Register Names and Addresses:

DPWM0_GCFG : 0,47h DPWM1_GCFG : 0,4Fh DPWM2_GCFG : 0,57h DPWM3_GCFG : 0,5Fh

Note Register DPWM3_GCFG is not applicable for the CY8CLED01D01 (1 channel PowerPSoC), CY8CLED02D01 (2 channel PowerPSoC) and the CY8CLED03D/G0x (3 channel PowerPSoC) devices.

Register DPWM2_GCFG is not applicable for the CY8CLED01D01 (1 channel PowerPSoC), CY8CLED02D01 (2 channel PowerPSoC) devices.

Register DPWM1_GCFG is not applicable for the CY8CLED01D01 (1 channel PowerPSoC) device.

	7	6	5	4	3	2	1	0
Access : POR						RW : 0		RW : 0
Bit Name						MODE[1:0]		GLEN

These registers configure the digital PWM block modes. In the table above, note that reserved bits are grayed table cells and are not described in the bit description section below. Reserved bits should always be written with a value of '0'.

Bit	Name	Description
2:1	**MODE[1:0]**	Digital PWM mode selection bit. 00 Pulse Width Modulation (PWM) Mode 01 Precision Illumination Signal Modulation (PrISM) Mode 10 Delta Sigma Modulator (DMM) Mode 11 Reserved
0	**GLEN**	Global enable. 0 PWM dimming signal is held at logic 1 1 PWM dimming signal is active

OBSOLETE

39.2.24 AMX_IN

Analog Input Select Register

Individual Register Names and Addresses:

AMX_IN: 0,60h

	7	6	5	4	3	2	1	0
Access : POR					RW : 0		RW : 0	
Bit Name					ACI1[1:0]		ACI0[1:0]	

This register controls the analog muxes that feed signals in from port pins into the analog column.

Use the register tables above, in addition to the detailed register bit descriptions below, to determine which bits are reserved. Note that reserved bits are grayed table cells and are not described in the bit description section below. Reserved bits should always be written with a value of '0'. For additional information, refer to the "Register Definitions" on page 187 in the Analog Input Configuration chapter.

Bits	Name	Description
3:2	**ACI1[1:0]**	Selects the Analog Column Mux 1. 00b Reserved 01b Reserved 10b ACM1 P0[4] 11b Reserved **Note** ACol1Mux (ABF_CR0, Address 1,62h) 0 AC1 = ACM1 1 AC1 = ACM0
1:0	**ACI0[1:0]**	Selects the Analog Column Mux 0. 00b Reserved 01b ACM0 P0[3] 10b ACM0 P0[5] 11b ACM0 P0[7]

OBSOLETE

39.2.25 AMUX_CFG

Analog Mux Configuration Register

Individual Register Names and Addresses:

AMUX_CFG : 0,61h

	7	6	5	4	3	2	1	0
Access : POR	RW : 0	RW : 0	RW : 0		RW : 0			RW : 0
Bit Name	BCol1Mux	ACol0Mux	INTCAP[1:0]		MUXCLK[2:0]			EN

This register is used to configure the clocked pre-charge mode of the analog multiplexer system.

For additional information, refer to the "Register Definitions" on page 268.

Bits	Name	Description
7	**BCol1Mux**	**0 Set column 1 input to column mux output (selects among Port 0 pins).** 1 Set column 1 input to the analog mux bus. If the bus is configured as two nets, the analog mux bus right net connects to column 1.
6	**ACol0Mux**	**0 Set column 0 input to column 0 mux output (selects among P0[5,3]).** 1 Set column 0 input to the analog mux bus.
5:4	**INTCAP[1:0]**	Selects pins for static operation, even when the precharge clock is selected with MUXCLK[2:0]. The PowerPSoC uses pins P0[7] (connects to Mux Bus Right) and P0[5] (connects to Mux Bus Left) for this function. 00b Both P0[7] and P0[5] are in normal precharge configuration. 01b P0[5] pin selected for static mode only. 10b P0[7] pin selected for static mode only. 11b Both P0[7] and P0[5] are selected for static mode only.
3:1	**MUXCLK[2:0]**	Selects a precharge clock source for analog mux bus connections: 000b Precharge clock is off, no switching. 001b VC1 010b VC2 011b Row0 Broadcast 100b Analog column clock 0 101b Analog column clock 1 110b Reserved 111b Reserved
0	**EN**	0 Disable MUXCLK output 1 Enable MUXCLK output

OBSOLETE

39.2.26 ARF_CR

Analog Reference Control Register

Individual Register Names and Addresses:

ARF_CR: 0,63h

	7	6	5	4	3	2	1	0
Access : POR		RW : 0	RW : 0			RW : 0		
Bit Name		HBE	REF[2:0]			PWR[2:0]		

This register is used to configure various features of the configurable analog references.

In the table above, note that the reserved bit is a gray table cell and is not described in the bit description section below. Reserved bits should always be written with a value of '0'. For additional information, refer to the "Register Definitions" on page 190 in the Analog Reference chapter.

Bits	Name	Description
6	**HBE**	Bias level control for opamps. 0 Low bias mode for analog array 1 High bias mode for analog array
5:3	**REF[2:0]**	Analog Array Reference Control (values with respect to Vss). These three bits select the sources for analog ***ground*** (AGND), the high reference (RefHi), and the low reference (RefLo). The following table applies to PowerPSoC devices:

	AGND	RefHi	RefLo
000b	Vdd/2	Vdd/2 + Bandgap	Vdd/2 - Bandgap
001b	Reserved	Reserved	Reserved
010b	Vdd/2	Vdd/2 + Vdd/2	Vdd/2 - Vdd/2
011b	2 *x* Bandgap	2 *x* Bandgap + Bandgap	2 *x* Bandgap - Bandgap
100b	2 *x* Bandgap	2 *x* Bandgap + P2[6]	2 *x* Bandgap - P2[6]
101b	Reserved	Reserved	Reserved
110b	Bandgap	Bandgap + Bandgap	Bandgap - Bandgap
111b	1.6 *x* Bandgap	1.6 *x* Bandgap + 1.6 *x* Bandgap	1.6 *x* Bandgap - 1.6 *x* Bandgap

Bits	Name	Description
2:0	**PWR[2:0]**	Analog Array Power Control

	Reference	CT Block	SC Blocks
000b	Off	Off	Off
001b	Low	On	Off
010b	Medium	On	Off
011b	High	On	Off
100b	Off	Off	Off
101b	Low	On	On
110b	Medium	On	On
111b	High	On	On

When selecting AGND using the REF{2:0] Analog array reference control, CT/SC blocks should be turned on by setting PWR[2:0].

OBSOLETE

39.2.27 CMP_CR0

Analog Comparator Bus 0 Register

Individual Register Names and Addresses:

CMP_CR0: 0,64h

	7	6	5	4	3	2	1	0
Access : POR			R : 0				RW : 0	
Bit Name			COMP[1:0]				AINT[1:0]	

This register is used to poll the analog column comparator bits and select column interrupts.

Use the register tables above, in addition to the detailed register bit descriptions below, to determine which bits are reserved. Note that reserved bits are grayed table cells and are not described in the bit description section below. Reserved bits should always be written with a value of '0'. For additional information, refer to the "Register Definitions" on page 170 in the Analog Interface chapter.

Bits	Name	Description
5	**COMP[1]**	Comparator bus state for column 1. This bit is updated on the rising edge of PHI2, unless the comparator latch disable bits are set (refer to the CLDISx bits in the CMP_CR1 register). If the comparator latch disable bits are set, then this bit is transparent to the comparator bus in the analog array.
4	**COMP[0]**	Comparator bus state for column 0. This bit is updated on the rising edge of PHI2, unless the comparator latch disable bits are set (refer to the CLDISx bits in the CMP_CR1 register). If the comparator latch disable bits are set, then this bit is transparent to the comparator bus in the analog array.
1	**AINT[1]**	Controls the selection of the analog comparator interrupt for column 1. 0 The comparator data bit from the column is the input to the interrupt controller. 1 The falling edge of PHI2 for the column is the input to the interrupt controller.
0	**AINT[0]**	Controls the selection of the analog comparator interrupt for column 0. 0 The comparator data bit from the column is the input to the interrupt controller. 1 The falling edge of PHI2 for the column is the input to the interrupt controller.

OBSOLETE

39.2.28 ASY_CR

Analog Synchronization Control Register

Individual Register Names and Addresses:

ASY_CR: 0,65h

	7	6	5	4	3	2	1	0
Access : POR		W : 0			RW : 0	RW : 0		RW : 0
Bit Name		SARCNT[2:0]			SARSIGN	SARCOL[1:0]		SYNCEN

This register is used to control SAR operation, except for the SYNCEN bit which is associated with analog register write stalling.

Use the register tables above, in addition to the detailed register bit descriptions below, to determine which bits are reserved. Note that reserved bits are grayed table cells and are not described in the bit description section below. Reserved bits should always be written with a value of '0'. For additional information, refer to the "Register Definitions" on page 170 in the Analog Interface chapter.

Bits	Name	Description
6:4	**SARCNT[2:0]**	Initial SAR count. This field is initialized to the number of SAR bits to process. **Note** Any write to the SARCNT bits, other than '0', will result in a modification of the read back of any analog register in the analog array. These bits must always be zero, except for SAR processing.
3	**SARSIGN**	This bit adjusts the SAR comparator based on the type of block addressed. In a DAC configuration with more than one analog block (more than 6 bits), this bit should be set to '0' when processing the most significant block. It should be set to '1' when processing the least significant block., because the least significant block is an inverting input to the most significant block.
2:1	**SARCOL[1:0]**	The selected column corresponds with the position of the SAR comparator block. Note that the comparator and DAC can be in the same block. 00b Analog Column 0 is the source for SAR comparator. 01b Analog Column 1 is the source for SAR comparator. 10b Reserved. 11b Reserved.
0	**SYNCEN**	Set to '1', will stall the CPU until the rising edge of PHI1, if a write to a register within an analog Switch Cap block takes place. 0 CPU stalling disabled. 1 CPU stalling enabled.

OBSOLETE

39.2.29 CMP_CR1

Analog Comparator Bus 1 Register

Individual Register Names and Addresses:

CMP_CR1: 0,66h

	7	6	5	4	3	2	1	0
Access : POR			RW : 0	RW : 0			RW : 0	RW : 0
Bit Name			CLDIS[1]	CLDIS[0]			CLK1X[1]	CLK1X[0]

This register is used to override the analog column comparator synchronization, or select direct column clock synchronization.

By default, the analog comparator bus is synchronized by the column clock and driven to the digital comparator bus for use in the digital array and the interrupt controller. The CLDIS bits are used to bypass the synchronization. This bypass mode can be used in power down operation to wake the device out of sleep, as a result of an analog column interrupt. Most devices update the comparator bus on the rising edge of PHI2. The PowerPSoC devices have the option to synchronize using PHI2 or, when the CLK1X bits are set for a given column, 1X rising edge column clock sync is enabled.

Use the register tables above, in addition to the detailed register bit descriptions below, to determine which bits are reserved. Note that reserved bits are grayed table cells and are not described in the bit description section below. Reserved bits should always be written with a value of '0'. For additional information, refer to the "Register Definitions" on page 170 in the Analog Interface chapter.

Bits	Name	Description
5	**CLDIS[1]**	Controls the comparator output latch, column 1. 0 Comparator bus synchronization is enabled. 1 Comparator bus synchronization is disabled.
4	**CLDIS[0]**	Controls the comparator output latch, column 0. 0 Comparator bus synchronization is enabled. 1 Comparator bus synchronization is disabled.
1	**CLK1X[1]**	Controls the digital comparator bus 1 synchronization clock. 0 Comparator bit is synchronized by rising edge of PHI2. 1 Comparator bit is synchronized directly by selected column clock. (Clock is not divided by 4.)
0	**CLK1X[0]**	Controls the digital comparator bus 0 synchronization clock. 0 Comparator bit is synchronized by rising edge of PHI2. 1 Comparator bit is synchronized directly by selected column clock. (Clock is not divided by 4.)

PRELIMINARY

39.2.30 PAMUX_S1

Power Analog MUX Select Input Register 1

Individual Register Names and Addresses:

PAMUX_S1 : 0,67h

	7	6	5	4	3	2	1	0
Access : POR	RW : 0		RW : 0		RW : 0		RW : 0	
Bit Name	S3[1:0]		S2[1:0]		S1[1:0]		S0[1:0]	

This register is used for multiplexing analog inputs from the DAC or FN0 to comparator bank inputs.

Bit	Name	Description	
7:6	**S3[1:0]**	00	FN0[0] input is multiplexed to CMP11 NEG INP
		01	FN0[3] input is multiplexed to CMP11 NEG INP
		10	DAC_OUT11 input is multiplexed to CMP11 NEG INP
		11	VGND input is multiplexed to CMP11 NEG INP
5:4	**S2[1:0]**	00	FN0[2] input is multiplexed to CMP10 NEG INP
		01	FN0[3] input is multiplexed to CMP10 NEG INP
		10	DAC_OUT10 input is multiplexed to CMP10 NEG INP
		11	VGND input is multiplexed to CMP10 NEG INP
3:2	**S1[1:0]**	00	FN0[1] input is multiplexed to CMP9 NEG INP
		01	FN0[2] input is multiplexed to CMP9 NEG INP
		10	DAC_OUT9 input is multiplexed to CMP9 NEG INP
		11	VGND input is multiplexed to CMP9 NEG INP
1:0	**S0[1:0]**	00	FN0[0] input is multiplexed to CMP8 NEG INP
		01	FN0[1] input is multiplexed to CMP8 NEG INP
		10	DAC_OUT8 input is multiplexed to CMP8 NEG INP
		11	VGND input is multiplexed to CMP8 NEG INP

OBSOLETE

39.2.31 PAMUX_S2

Power Analog MUX Select Input Register 2

Individual Register Names and Addresses:

PAMUX_S2 : 0,68h

	7	6	5	4	3	2	1	0
Access : POR	RW : 0		RW : 0		RW : 0		RW : 0	
Bit Name	S7[1:0]		S6[1:0]		S5[1:0]		S4[1:0]	

This register is used for multiplexing analog inputs from the DAC, CSA, or FN0 to comparator bank inputs.

Bit	Name		Description
7:6	**S7[1:0]**	00	CSA_OUT0 input is multiplexed to CMP9 POS INP
		01	CSA_OUT1 input is multiplexed to CMP9 POS INP
		10	FN0[0] input is multiplexed to CMP9 POS INP
		11	FN0[2] input is multiplexed to CMP9 POS INP
Note	CSA_OUT1 is not applicable for CY8CLED01D01 (1 channel PowerPSoC).		
5:4	**S6[1:0]**	00	CSA_OUT0 input is multiplexed to CMP8 POS INP
		01	CSA_OUT3 input is multiplexed to CMP8 POS INP
		10	FN0[1] input is multiplexed to CMP8 POS INP
		11	FN0[3] input is multiplexed to CMP8 POS INP
Note	CSA_OUT3 is not applicable for CY8CLED01D01 (1 channel PowerPSoC), CY8CLED02D01 (2 channel PowerPSoC) and CY8CLED03D/G0x (3 channel PowerPSoC) devices.		
3:2	**S5[1:0]**	00	FN0[1] input is multiplexed to CMP13 NEG INP
		01	FN0[3] input is multiplexed to CMP13 NEG INP
		10	DAC_OUT13 input is multiplexed to CMP13 NEG INP
		11	VGND input is multiplexed to CMP13 NEG INP
1:0	**S4[1:0]**	00	FN0[0] input is multiplexed to CMP12 NEG INP
		01	FN0[2] input is multiplexed to CMP12 NEG INP
		10	DAC_OUT12 input is multiplexed to CMP12 NEG INP
		11	VGND input is multiplexed to CMP12 NEG INP

OBSOLETE

39.2.32 PAMUX_S3

Power Analog MUX Select Input Register 3

Individual Register Names and Addresses:

PAMUX_S3 : 0,69h

	7	6	5	4	3	2	1	0
Access : POR	RW : 0		RW : 0		RW : 0		RW : 0	
Bit Name	S11[1:0]		S10[1:0]		S9[1:0]		S8[1:0]	

This register is used for multiplexing analog inputs from the comparator or FN0 to comparator bank inputs.

Bit	Name	Description
7:6	**S11[1:0]**	00 CSA_OUT0 input is multiplexed to CMP13 POS INP 01 CSA_OUT2 input is multiplexed to CMP13 POS INP 10 FN0[0] input is multiplexed to CMP13 POS INP 11 FN0[3] input is multiplexed to CMP13 POS INP
Note	CSA_OUT2 is not applicable for CY8CLED01D01 (1 channel PowerPSoC) and CY8CLED02D01 (2 channel PowerPSoC) devices.	
5:4	**S10[1:0]**	00 CSA_OUT1 input is multiplexed to CMP12 POS INP 01 CSA_OUT3 input is multiplexed to CMP12 POS INP 10 FN0[2] input is multiplexed to CMP12 POS INP 11 FN0[3] input is multiplexed to CMP12 POS INP
3:2	**S9[1:0]**	00 CSA_OUT2 input is multiplexed to CMP11 POS INP 01 CSA_OUT3 input is multiplexed to CMP11 POS INP 10 FN0[1] input is multiplexed to CMP11 POS INP 11 FN0[2] input is multiplexed to CMP11 POS INP
Note	CSA_OUT3 is not applicable for CY8CLED01D01 (1 channel PowerPSoC), CY8CLED02D01 (2 channel PowerPSoC) and CY8CLED03D/G0x (3 channel PowerPSoC) devices.	
1:0	**S8[1:0]**	00 CSA_OUT1 input is multiplexed to CMP10 POS INP 01 CSA_OUT2 input is multiplexed to CMP10 POS INP 10 FN0[0] input is multiplexed to CMP10 POS INP 11 FN0[1] input is multiplexed to CMP10 POS INP
Note	CSA_OUT1 is not applicable for CY8CLED01D01 (1 channel PowerPSoC).	

OBSOLETE

39.2.33 PAMUX_S4

Power Analog MUX Select Input Register 4

Individual Register Names and Addresses:

PAMUX_S4 : 0,6Ah

	7	6	5	4	3	2	1	0
Access : POR			RW : 0		RW : 0	RW : 0	RW : 0	RW : 0
Bit Name			S16[1:0]		S15	S14	S13	S12

This register is used for multiplexing analog inputs from CSA or FN0 to the hysteretic controller and AINX block. In the table above, note that the reserved bit is a gray table cell and is not described in the bit description section below. Reserved bits should always be written with a value of '0'.

Bit	Name	Description	
5:4	**S16[1:0]**	00	CSA_OUT0 input is multiplexed to AINX
		01	CSA_OUT1 input is multiplexed to AINX
		10	CSA_OUT2 input is multiplexed to AINX
		11	CSA_OUT3 input is multiplexed to AINX
3	**S15**	0	CSA_OUT3 input is multiplexed to HYST_IFB_3
		1	FN0[3] input is multiplexed to HYST_IFB_3
2	**S14**	0	CSA_OUT2 input is multiplexed to HYST_IFB_2
		1	FN0[2] input is multiplexed to HYST_IFB_2
1	**S13**	0	CSA_OUT1 input is multiplexed to HYST_IFB_1
		1	FN0[1] input is multiplexed to HYST_IFB_1
0	**S12**	0	CSA_OUT0 input is multiplexed to HYST_IFB_0
		1	FN0[0] input is multiplexed to HYST_IFB_0

Note CSA_OUT3 and HYST_IFB_3 is not applicable for CY8CLED01D01 (1 channel PowerPSoC), CY8CLED02D01 (2 channel PowerPSoC) and CY8CLED03D/G0x (3 channel PowerPSoC) devices.

CSA_OUT2 and HYST_IFB_2 is not applicable for CY8CLED01D01 (1 channel PowerPSoC) and CY8CLED02D01 (2 channel PowerPSoC) devices.

CSA_OUT1 and HYST_IFB_1 is not applicable for CY8CLED01D01 (1 channel PowerPSoC) device.

OBSOLETE

39.2.34 TMP_DRx

Temporary Data Register

Individual Register Names and Addresses:

TMP_DR0 : x,6Ch TMP_DR1 : x,6Dh TMP_DR2 : x,6Eh TMP_DR3 : x,6Fh

	7	6	5	4	3	2	1	0
Access : POR	RW : 00							
Bit Name	Data[7:0]							

This register is used to enhance the performance in multiple SRAM page PowerPSoC devices.

For additional information, refer to the “Register Definitions” on page 66 in the RAM Paging chapter.

Bit	Name	Description
7:0	**Data[7:0]**	General purpose register space.

OBSOLETE

39.2.35 ACBxxCR3

Analog Continuous Time Type B Block Control Register 3

Individual Register Names and Addresses:

ACB00CR3 : x,70h ACB01CR3 : x,74h

	7	6	5	4	3	2	1	0
Access : POR					RW : 0	RW : 0	RW : 0	RW : 0
Bit Name					LPCMPEN	CMOUT	INSAMP	EXGAIN

This register is one of four registers used to configure a type B continuous time PSoC block.

The register naming convention for arrays of PSoC blocks and their registers is <Prefix>mn<Suffix>, where m=row index, n=column index; therefore, ACB01CR3 is a register for an analog PSoC block in row 0 column 1. In the table above, note that reserved bits are grayed table cells and are not described in the bit description section below. Reserved bits should always be written with a value of '0'. For additional information, refer to the "Register Definitions" on page 195 in the Continuous Time Block chapter.

Bits	Name		Description
3	**LPCMPEN**	0	Low power comparator is disabled.
		1	Low power comparator is enabled.
2	**CMOUT**	0	No connection to column output
		1	Connect Common mode to column output
1	**INSAMP**	0	Normal mode
		1	Connect amplifiers across column to form an Instrumentation Amp
0	**EXGAIN**	0	Standard Gain mode
		1	High Gain mode (see the ACBxxCR0 register on page 400)

OBSOLETE

39.2.36 ACBxxCR0

Analog Continuous Time Type B Block Control Register 0

Individual Register Names and Addresses:

ACB00CR0 : x,71h ACB01CR0 : x,75h

	7	6	5	4	3	2	1	0
Access : POR	RW : 0				RW : 0	RW : 0	RW : 0	
Bit Name	RTapMux[3:0]				Gain	RTopMux	RBotMux[1:0]	

This register is one of four registers used to configure a type B continuous time PSoC block.

The register naming convention for arrays of PSoC blocks and their registers is <Prefix>mn<Suffix>, where m=row index, n=column index; therefore, ACB01CR0 is a register for an analog PSoC block in row 0 column 1. For additional information, refer to the “Register Definitions” on page 195 in the Continuous Time Block chapter.

Bits **Name** **Description**

7:4 **RTapMux[3:0]**

Encoding for selecting one of 18 resistor taps. The four bits of RTapMux[3:0] allow selection of 16 taps. The two additional ***tap*** selections are provided using ACBxxCR3 bit 0, EXGAIN. The EXGAIN bit only affects the RTapMux values 0h and 1h.

RTap	EXGAIN	Rf	Ri	Loss	Gain
0h	1	47	1	0.0208	48.000
1h	1	46	2	0.0417	24.000
0h	0	45	3	0.0625	16.000
1h	0	42	6	0.1250	8.000
2h	0	39	9	0.1875	5.333
3h	0	36	12	0.2500	4.000
4h	0	33	15	0.3125	3.200
5h	0	30	18	0.3750	2.667
6h	0	27	21	0.4375	2.286
7h	0	24	24	0.5000	2.000
8h	0	21	27	0.5625	1.778
9h	0	18	30	0.6250	1.600
Ah	0	15	33	0.6875	1.455
Bh	0	12	36	0.7500	1.333
Ch	0	9	39	0.8125	1.231
Dh	0	6	42	0.8750	1.143
Eh	0	3	45	0.9375	1.067
Fh	0	0	48	1.0000	1.000

3 **Gain**

Select gain or loss configuration for output tap.
0 Loss
1 Gain

2 **RTopMux**

Encoding for feedback resistor select.
0 Rtop to Vdd
1 Rtop to opamp’s output

(continued on next page)

OBSOLETE

39.2.36 ACBxxCR0 *(continued)*

1:0 RBotMux[1:0]

Encoding for feedback resistor select. Bits [1:0] are overridden if bit 1 of the ACBxxCR3 register is set. In that case, the bottom of the resistor string is connected across columns. In the table below, columns ACB00 and ACB01 are used.

	ACB00	**ACB01**
00b	ACB01	ACB00
01b	AGND	AGND
10b	Vss	Vss
11b	ASC10	ASD11

OBSOLETE

39.2.37 ACBxxCR1

Analog Continuous Time Type B Block Control Register 1

Individual Register Names and Addresses:

ACB00CR1 : x,72h ACB01CR1 : x,76h

	7	6	5	4	3	2	1	0
Access : POR	RW : 0	RW : 0	RW : 0			RW : 0		
Bit Name	AnalogBus	CompBus	NMux[2:0]			PMux[2:0]		

This register is one of four registers used to configure a type B continuous time PSoC block.

The register naming convention for arrays of PSoC blocks and their registers is <Prefix>mn<Suffix>, where m=row index, n=column index; therefore, ACB01CR1 is a register for an analog PSoC block in row 0 column 1. For additional information, refer to the “Register Definitions” on page 195 in the Continuous Time Block chapter.

Bits	Name	Description
7	**AnalogBus**	Enable output to the analog bus. 0 Disable output to analog column bus. 1 Enable output to analog column bus.
6	**CompBus**	Enable output to the comparator bus. 0 Disable output to comparator bus. 1 Enable output to comparator bus.
5:3	**NMux[2:0]**	Encoding for negative input select. In the table below, columns ACB00 and ACB01 are used. **ACB00** **ACB01** 000b ACB01 ACB00 001b AGND AGND 010b RefLo RefLo 011b RefHi RefHi 100b FB# FB# 101b ASC10 ASD11 110b ASD11 ASC10 111b Port Inputs Port Inputs # Feedback point from tap of the feedback resistor as defined by corresponding CR0 bits [7:4] and CR3 bit 0.

(continued on next page)

OBSOLETE

39.2.37 ACBxxCR1 *(continued)*

2:0 PMux[2:0]

Encoding for positive input select. The following table is used by this device.

	ACB00	ACB01
000b	RefLo	Vss
001b	Port Inputs	Port Inputs
010b	ACB01	ACB00
011b	AGND	AGND
100b	ASC10	ASD11
101b	ASD11	ASC10
110b	ABUS0	ABUS1
111b	FB#	FB#

Feedback point from tap of the feedback resistor as defined by corresponding CR0 bits [7:4] and CR3 bit 0.

OBSOLETE

39.2.38 ACBxxCR2

Analog Continuous Time Type B Block Control Register 2

Individual Register Names and Addresses:

ACB00CR2 : x,73h ACB01CR2 : x,77h

	7	6	5	4	3	2	1	0
Access : POR	RW : 0	RW : 0	RW : 0	RW : 0	RW : 0		RW : 0	
Bit Name	CPhase	CLatch	CompCap	TMUXEN	TestMux[1:0]		PWR[1:0]	

This register is one of four registers used to configure a type B continuous time PSoC block.

The register naming convention for arrays of PSoC blocks and their registers is <Prefix>mn<Suffix>, where m=row index, n=column index; therefore, ACB01CR2 is a register for an analog PSoC block in row 0 column 1. For additional information, refer to the "Register Definitions" on page 195 in the Continuous Time Block chapter.

Bits	Name	Description
7	**CPhase**	0 Comparator Control latch is transparent on PHI1. 1 Comparator Control latch is transparent on PHI2.
6	**CLatch**	0 Comparator Control latch is always transparent. 1 Comparator Control latch is active.
5	**CompCap**	0 Comparator Mode 1 Opamp Mode
4	**TMUXEN**	Test Mux 0 Disabled 1 Enabled
3:2	**TestMux[1:0]**	In the table below, columns ACB00 and ACB01 are used by this device. 00b Positive Input to ACB00: ABUS0 ACB01: ABUS1 01b AGND to ACB00: ABUS0 ACB01: ABUS1 10b RefLo to ACB00: ABUS0 ACB01: ABUS1 11b RefHi to ACB00: ABUS0 ACB01: ABUS1
1:0	**PWR[1:0]**	Encoding for selecting one of four power levels. High Bias mode doubles the power at each of these settings. See bit 6 in the ARF_CR register on page 390. 00b Off 01b Low 10b Medium 11b High

OBSOLETE

39.2.39 DPWMxPCFG

Digital PWM Operating Configuration Register

Individual Register Names and Addresses:

DPWM0PCFG : x,78h DPWM1PCFG : x,79h DPWM2PCFG : x,7Ah DPWM3PCFG : x,7Bh

Note Register DPWM3_PCFG is not applicable for the CY8CLED01D01 (1 channel PowerPSoC), CY8CLED02D01 (2 channel PowerPSoC) and the CY8CLED03D/G0x (3 channel PowerPSoC) devices.

Register DPWM2_PCFG is not applicable for the CY8CLED01D01 (1 channel PowerPSoC), CY8CLED02D01 (2 channel PowerPSoC) devices.

Register DPWM1_PCFG is not applicable for the CY8CLED01D01 (1 channel PowerPSoC) device.

	7	6	5	4	3	2	1	0
Access : POR		RW : 0	RW : 0		RW : 0		RW : 0	RW : 0
Bit Name		CENTRE_INT_LOC	DSM_RESOLUTION[1:0]		ALIGN[1:0]		COMPTYPE	INTTYPE

This register is used to configure operating modes of the digital PWM block. In the table above, note that reserved bits are grayed table cells and are not described in the bit description section below. Reserved bits should always be written with a value of '0'.

Bits	Name	Description
6	**CENTRE_INT_LOC**	Compare type select. 0 Terminal interrupt occurs at the trough of the counter sweep. 1 Terminal interrupt occurs at the peak of the counter sweep. This bit is valid only when ALIGN[1:0] is set for center alignment mode and the INTTYPE is set for the terminal count.
5:4	**DSM_RESOLUTION[1:0]**	00 4-bit DSM resolution 01 3-bit DSM resolution 10 2-bit DSM resolution 11 1-bit DSM resolution
3:2	**ALIGN[1:0]**	Alignment select. 00 Left alignment to the period clock 01 Center alignment (even period and duty cycles) to the clock period 10 Right alignment to the period clock
1	**COMPTYPE**	Compare type select. 0 Compare step made based on the "less than" criteria 1 Compare step made based on the "less than or equal to criteria"
0	**INTTYPE**	Interrupt type select. 0 CPU interrupt enabled for the edge of the output 1 CPU interrupt enabled for the end of the period (terminal count)

OBSOLETE

39.2.40 DPWMINTFLAG

Digital PWM Interrupt Status Register

Individual Register Names and Addresses:

DPWMINTFLAG : 0,7Ch

2L COLUMN	7	6	5	4	3	2	1	0
Access : POR					RW : 0	RW : 0	RW : 0	RW : 0
Bit Name					PWM_INT3	PWM_INT2	PWM_INT1	PWM_INT0

This register is used to store the status of the interrupts generated the by digital PWM block. In the table above, note that reserved bits are grayed table cells and are not described in the bit description section below. Reserved bits should always be written with a value of '0'.

Bits	Name	Description	
3	PWM_INT3	0	No interrupt generated from DPWM3 block.
		1	Interrupt generated by DPWM3 block. Writing '1' to this bit clears the interrupt source.
2	PWM_INT2	0	No interrupt generated from DPWM2 block.
		1	Interrupt generated by DPWM2 block. Writing '1' to this bit clears the interrupt source.
1	PWM_INT1	0	No interrupt generated from DPWM1 block.
		1	Interrupt generated by DPWM1 block. Writing '1' to this bit clears the interrupt source.
0	PWM_INT0	0	No interrupt generated from DPWM0 block.
		1	Interrupt generated by DPWM0 block. Writing '1' to this bit clears the interrupt source.

Note Bit 3 is not applicable for CY8CLED01D01 (1 channel PowerPSoC), CY8CLED02D01 (2 channel PowerPSoC) and CY8CLED03D/G0x (3 channel PowerPSoC).

Bit 2 is not applicable for CY8CLED01D01 (1 channel PowerPSoC) and CY8CLED02D01 (2 channel PowerPSoC) devices.

Bit 1 is not applicable for CY8CLED01D01 (1 channel PowerPSoC) device.

OBSOLETE

39.2.41 DPWMINTMSK

Digital PWM Interrupt Mask Register

Individual Register Names and Addresses:

DPWMINTMSK :0,7Dh

	7	6	5	4	3	2	1	0
Access : POR	RW : 0	RW : 0	RW : 0	RW : 0	RW : 0	RW : 0	RW : 0	RW : 0
Bit Name	MSK_HP3	MSK_HP2	MSK_HP1	MSK_HP0	MSK_IP3	MSK_IP2	MSK_IP1	MSK_IP0

This register masks the interrupts generated by the digital PWM block.

Bits	Name		Description
7	**MSK_HP3**	0	Mask the HP Interrupt generated by DPWM3 block
		1	Unmask the HP Interrupt generated by DPWM3 block
6	**MSK_HP2**	0	Mask the HP Interrupt generated by DPWM2 block
		1	Unmask the HP Interrupt generated by DPWM2 block
5	**MSK_HP1**	0	Mask the HP Interrupt generated by DPWM1 block
		1	Unmask the HP Interrupt generated by DPWM1 block
4	**MSK_HP0**	0	Mask the HP Interrupt generated by DPWM0 block
		1	Unmask the HP Interrupt generated by DPWM0 block
3	**MSK_LP3**	0	Mask the LP Interrupt generated by DPWM3 block
		1	Unmask the LP Interrupt generated by DPWM3 block
2	**MSK_LP2**	0	Mask the LP Interrupt generated by DPWM2 block
		1	Unmask the LP Interrupt generated by DPWM2 block
1	**MSK_LP1**	0	Mask the LP Interrupt generated by DPWM1 block
		1	Unmask the LP Interrupt generated by DPWM1 block
0	**MSK_LP0**	0	Mask the LP Interrupt generated by DPWM0 block
		1	Unmask the LP Interrupt generated by DPWM0 block

Note DPWM3 is not present in the 1, 2 and 3 channel PowerPSoC devices.

DPWM2 is not present in the 1 and 2 channel PowerPSoC devices.

DPWM1 is not present in the 1 channel device.

OBSOLETE

39.2.42 DPWMSYNC

Digital PWM SYNC Mode Register

Individual Register Names and Addresses:

DPWMINTMSK : 0,7Eh

	7	6	5	4	3	2	1	0
Access : POR	RW : 0	RW : 0	RW : 0	RW : 0	RW : 0	RW : 0		RW : 0
Bit Name	DPWM3	DPWM2	DPWM1	DPWM0	CLK_SEL	SYNC_MSTR_SEL[1:0]		SYNC_MODE

This register is used to configure the SYNC MODE scheme. SYNC MODE is a scheme in which two or more of the digital modulator blocks in the PowerPSoC operate in synchronism. One of these digital modulator blocks is designated the master (using DPWMSYNC[2:1] and the remaining digital modulator blocks in the scheme are the slaves. The blocks that participate in the SYNC scheme are indicated by DPWMSYNC[7:4]. The output pulses of the slave digital modulator block can be phase shifted relative to the master. The amount of phase shift for a slave digital modulator block is specified in the DPWMxPCH and DPWMxPCL register for that digital modulator block.

Bits	Name	Description	
7	**DPWM3**	0 1	DPWM3 will not participate in SYNC MODE. DPWM3 will participate in SYNC MODE.
6	**DPWM2**	0 1	DPWM2 will not participate in SYNC MODE. DPWM2 will participate in SYNC MODE.
5	**DPWM1**	0 1	DPWM1 will not participate in SYNC MODE. DPWM1 will participate in SYNC MODE.
4	**DPWM0**	0 1	DPWM0 will not participate in SYNC MODE. DPWM0 will participate in SYNC MODE.
3	**CLK_SEL**	0 1	48 MHz CLK for the DPWM block. 24 MHz CLK for the DPWM block.
2:1	**SYNC_MSTR_SEL[1:0]**	00 01 10 11	DPWM0 is the MASTER DPWM1 is the MASTER DPWM2 is the MASTER DPWM3 is the MASTER
0	**SYNC_MODE**	0 1	Disables the SYNC MODE. Enables the SYNC MODE.

Note DPWM3 is not present in the 1, 2 and 3 channel PowerPSoC devices.

DPWM2 is not present in the 1 and 2 channel PowerPSoC devices.

DPWM1 is not present in the 1 channel device.

OBSOLETE

39.2.43 ASCxxCR0

Analog Switch Cap Type C Block Control Register 0

Individual Register Names and Addresses:

ASC10CR0 : x,80h ASC21CR0 : x,94h

	7	6	5	4	3	2	1	0
Access : POR	RW : 0	RW : 0	RW : 0	RW : 00				
Bit Name	FCap	ClockPhase	ASign	ACap[4:0]				

This register is one of four registers used to configure a type C switch capacitor PSoC block.

The register naming convention for arrays of PSoC blocks and their registers is <Prefix>mn<Suffix>, where m=row index, n=column index; therefore, ASC21CR0 is a register for an analog PSoC block in row 2 column 1. For additional information, refer to the "Register Definitions" on page 202 in the Switched Capacitor Block chapter.

Bits	Name	Description
7	**FCap**	F Capacitor value selection bit. 0 16 capacitor units 1 32 capacitor units
6	**ClockPhase**	The ClockPhase controls the clock phase of the comparator within the switched cap blocks, as well as the clock phase of the switches. 0 ***Switch phasing*** is Internal PHI1 = External PHI1. Comparator Capture Point Event is triggered by Falling PHI2 and Comparator Output Point Event is triggered by Rising PHI1. 1 Switch phasing is Internal PHI1 = External PHI2. Comparator Capture Point Event is triggered by Falling PHI1 and Comparator Output Point Event is triggered by Rising PHI2.
5	**ASign**	0 Input sampled on Internal PHI1. Reference Input sampled on Internal PHI2. Positive gain. 1 Input sampled on Internal PHI2. Reference Input sampled on Internal PHI1. Negative gain.
4:0	**ACap[4:0]**	Binary encoding for 32 possible capacitor sizes for capacitor ACap.

OBSOLETE

39.2.44 ASCxxCR1

Analog Switch Cap Type C Block Control Register 1

Individual Register Names and Addresses:

ASC10CR1 : x,81h ASC21CR1 : x,95h

	7	6	5	4	3	2	1	0
Access : POR	RW : 0			RW : 00				
Bit Name	ACMux[2:0]			BCap[4:0]				

This register is one of four registers used to configure a type C switch capacitor PSoC block.

The register naming convention for arrays of PSoC blocks and their registers is <Prefix>mn<Suffix>, where m=row index, n=column index; therefore, ASC21CR1 is a register for an analog PSoC block in row 2 column 1. For additional information, refer to the “Register Definitions” on page 202 in the Switched Capacitor Block chapter.

Bits	Name	Description
7:5	**ACMux[2:0]**	Encoding to select A and C inputs.

	ASC10		ASC21	
	A Inputs	*C Inputs*	*A Inputs*	*C Inputs*
000b	ACB00	ACB00	ASD11	ASD11
001b	ASD11	ACB00	ASD20	ASD11
010b	RefHi	ACB00	RefHi	ASD11
011b	ASD20	ACB00	Vtemp	ASD11
100b	ACB01	ASD20	ASC10	ASD11
101b	ACB00	ASD20	ASD20	ASD11
110b	ASD11	ASD20	ABUS1	ASD11
111b	AINX	Reserved	P2[2]	ASD11

4:0	**BCap[4:0]**	Binary encoding for 32 possible capacitor sizes of the capacitor BCap.

OBSOLETE

39.2.45 ASCxxCR2

Analog Switch Cap Type C Block Control Register 2

Individual Register Names and Addresses:

ASC10CR2 : x,82h ASC21CR2 : x,96h

	7	6	5	4	3	2	1	0
Access : POR	RW : 0	RW : 0	RW : 0	RW : 00				
Bit Name	AnalogBus	CompBus	AutoZero	CCap[4:0]				

This register is one of four registers used to configure a type C switch capacitor PSoC block.

The register naming convention for arrays of PSoC blocks and their registers is <Prefix>mn<Suffix>, where m=row index, n=column index; therefore, ASC21CR2 is a register for an analog PSoC block in row 2 column 1. For additional information, refer to the "Register Definitions" on page 202 in the Switched Capacitor Block chapter.

Bits	Name	Description
7	**AnalogBus**	Enable output to the analog bus. Note that ClockPhase in the ASCxxCR0 register on page 409, bit 6, also affects this bit: Sample + Hold mode is allowed only if ClockPhase = 0. 0 Disable output to analog column bus. 1 Enable output to analog column bus.
6	**CompBus**	Enable output to the comparator bus. 0 Disable output to comparator bus. 1 Enable output to comparator bus.
5	**AutoZero**	Bit for controlling gated switches. 0 Shorting switch is not active. Input cap branches shorted to opamp input. 1 Shorting switch is enabled during Internal PHI1. Input cap branches shorted to analog ground during Internal PHI1 and to opamp input during Internal PHI2.
4:0	**CCap[4:0]**	Binary encoding for 32 possible capacitor sizes of the capacitor CCap.

OBSOLETE

39.2.46 ASCxxCR3

Analog Switch Cap Type C Block Control Register 3

Individual Register Names and Addresses:

ASC10CR3 : x,83h ASC21CR3 : x,97h

	7	6	5	4	3	2	1	0
Access : POR	RW : 0		RW : 0	RW : 0	RW : 0		RW : 0	
Bit Name	ARefMux[1:0]		FSW1	FSW0	BMuxSC[1:0]		PWR[1:0]	

This register is one of four registers used to configure a type C switch capacitor PSoC block.

The register naming convention for arrays of PSoC blocks and their registers is <Prefix>mn<Suffix>, where m=row index, n=column index; therefore, ASC21CR3 is a register for an analog PSoC block in row 2 column 1. For additional information, refer to the “Register Definitions” on page 202 in the Switched Capacitor Block chapter.

Bits **Name** **Description**

7:6 **ARefMux[1:0]**
Encoding for selecting reference input.
00b Analog ground is selected.
01b RefHi input selected.
10b RefLo input selected.
11b Reference selection is driven by the comparator. (When output comparator node is set high, the input is set to RefHi. When set low, the input is set to RefLo.)

5 **FSW1**
Bit for controlling the FSW1 switch.
0 Switch is disabled.
1 If the FSW1 bit is set to ‘1’, the state of the switch is determined by the AutoZero bit. If the AutoZero bit is ‘0’, the switch is enabled at all times. If the AutoZero bit is ‘1’, the switch is enabled only when the Internal PHI2 is high.

4 **FSW0**
Bit for controlling the FSW0 switch.
0 Switch is disabled.
1 Switch is enabled when PHI1 is high.

3:2 **BMuxSC[1:0]**
Encoding for selecting B inputs.

	ASC10	**ASC21**
00b	ACB00	ASD11
01b	ASD11	ASD20
10b	Reserved]	Reserved
11b	ASD20	TrefGND

1:0 **PWR[1:0]**
Encoding for selecting one of four power levels.
00b Off 10b Medium
01b Low 11b High

OBSOLETE

39.2.47 ASDxxCR0

Analog Switch Cap Type D Block Control Register 0

Individual Register Names and Addresses:

ASD11CR0 : x,84h

ASD20CR0 : x,90h

	7	6	5	4	3	2	1	0
Access : POR	RW : 0	RW : 0	RW : 0	RW : 00				
Bit Name	FCap	ClockPhase	ASign	ACap[4:0]				

This register is one of four registers used to configure a type D switch capacitor PSoC block.

The register naming convention for arrays of PSoC blocks and their registers is <Prefix>mn<Suffix>, where m=row index, n=column index; therefore, ASD11CR0 is a register for an analog PSoC block in row 1 column 1. For additional information, refer to the "Register Definitions" on page 202 in the Switched Capacitor Block chapter.

Bits	Name	Description
7	**FCap**	F Capacitor value selection bit. 0 16 capacitor units 1 32 capacitor units
6	**ClockPhase**	The ClockPhase controls the clock phase of the comparator within the switched cap blocks, as well as the clock phase of the switches. 0 ***Switch phasing*** is Internal PHI1 = External PHI1. Comparator Capture Point Event is triggered by Falling PHI2 and Comparator Output Point Event is triggered by Rising PHI1. 1 Switch phasing is Internal PHI1 = External PHI2. Comparator Capture Point Event is triggered by Falling PHI1 and Comparator Output Point Event is triggered by Rising PHI2.
5	**ASign**	0 Input sampled on Internal PHI1. Reference Input sampled on Internal PHI2. Positive gain. 1 Input sampled on Internal PHI2. Reference Input sampled on Internal PHI1. Negative gain.
4:0	**ACap[4:0]**	Binary encoding for 32 possible capacitor sizes for capacitor ACap.

OBSOLETE

39.2.48 ASDxxCR1

Analog Switch Cap Type D Block Control Register 1

Individual Register Names and Addresses:

ASD11CR1 : x,85h

ASD20CR1 : x,91h

	7	6	5	4	3	2	1	0
Access : POR	RW : 0			RW : 00				
Bit Name	AMux[2:0]			BCap[4:0]				

This register is one of four registers used to configure a type D switch capacitor PSoC block.

The register naming convention for arrays of PSoC blocks and their registers is <Prefix>mn<Suffix>, where m=row index, n=column index; therefore, ASD11CR1 is a register for an analog PSoC block in row 1 column 1. For additional information, refer to the “Register Definitions” on page 202 in the Switched Capacitor Block chapter.

Bits	Name	Description
7:5	**AMux[2:0]**	Encoding for selecting A and C inputs for C Type blocks and A inputs for D Type blocks. In the table below, columns ASD20 and ASD11 are used by this device.

	ASD20	**ASD11**
000b	ASC10	ACB01
001b	Reserved	P2[2]
010b	ASC21	ASC10
011b	ABUS0	ASC21
100b	RefHi	RefHi
101b	ASD11	ACB00
110b	Reserved	Reserved
111b	Reserved	Reserved

4:0	**BCap[4:0]**	Binary encoding for 32 possible capacitor sizes for capacitor BCap.

OBSOLETE

39.2.49 ASDxxCR2

Analog Switch Cap Type D Block Control Register 2

Individual Register Names and Addresses:

ASD20CR2 : 0,92h ASD11CR2 : 0,86h

	7	6	5	4	3	2	1	0
Access : POR	RW : 0	RW : 0	RW : 0	RW : 00				
Bit Name	AnalogBus	CompBus	AutoZero	CCap[4:0]				

This register is one of four registers used to configure a type D switch capacitor PSoC block.

The register naming convention for arrays of PSoC blocks and their registers is <Prefix>mn<Suffix>, where m=row index, n=column index; therefore, ASD11CR2 is a register for an analog PSoC block in row 1 column 1. For additional information, refer to the “Register Definitions” on page 202 in the Switched Capacitor Block chapter.

Bits	Name	Description
7	**AnalogBus**	Enable output to the analog bus. Note that ClockPhase in ASDxxCR0 register, bit 6, also effect this bit: Sample + Hold mode is allowed only if ClockPhase = 0. 0 Disable output to analog column bus. 1 Enable output to analog column bus.
6	**CompBus**	Enable output to the comparator bus. 0 Disable output to comparator bus. 1 Enable output to comparator bus.
5	**AutoZero**	Bit for controlling the AutoZero switch. 0 Shorting switch is not active. Input cap branches shorted to opamp input. 1 Shorting switch is enabled during Internal PHI1. Input cap branches shorted to analog ground during Internal PHI1 and to opamp input during Internal PHI2.
4:0	**CCap[4:0]**	Binary encoding for 32 possible capacitor sizes for capacitor CCap.

OBSOLETE

39.2.50 ASDxxCR3

Analog Switch Cap Type D Block Control Register 3

Individual Register Names and Addresses:

ASD20CR3 : 0,93h ASD11CR3 : 0,87h

	7	6	5	4	3	2	1	0
Access : POR	RW : 0		RW : 0	RW : 0	RW : 0	RW : 0	RW : 0	
Bit Name	ARefMux[1:0]		FSW1	FSW0	BSW	BMuxSD	PWR[1:0]	

This register is one of four registers used to configure a type D switch capacitor PSoC block.

The register naming convention for arrays of PSoC blocks and their registers is <Prefix>mn<Suffix>, where m=row index, n=column index; therefore, ASD11CR3 is a register for an analog PSoC block in row 1 column 1. For additional information, refer to the “Register Definitions” on page 202 in the Switched Capacitor Block chapter.

Bits	Name	Description
7:6	**ARefMux[1:0]**	Encoding for selecting reference input. 00b Analog ground is selected. 01b RefHi input selected. (This is usually the high reference.) 10b RefLo input selected. (This is usually the low reference.) 11b Reference selection is driven by the comparator. (When output comparator node is set high, the input is set to RefHi. When set low, the input is set to RefLo.)
5	**FSW1**	Bit for controlling gated switches. 0 Switch is disabled. 1 If the FSW1 bit is set to ‘1’, the state of the switch is determined by the AutoZero bit. If the AutoZero bit is ‘0’, the switch is enabled at all times. If the AutoZero bit is ‘1’, the switch is enabled only when the Internal PHI2 is high.
4	**FSW0**	Bits for controlling gated switches. 0 Switch is disabled. 1 Switch is enabled when PHI1 is high.
3	**BSW**	Enable switching in branch. 0 B branch is a continuous time path. 1 B branch is switched with Internal PHI2 sampling.
2	**BMuxSD**	Encoding for selecting B inputs. (Note that the available mux inputs vary by individual PSoC block.) In the table below, columns ASD20 and ASD11 are used by this device. **ASD20 ASD11** 0 ASD11 ACB00 1 ASC10 ACB01
1:0	**PWR[1:0]**	Encoding for selecting one of four power levels. 00b Off 10b Medium 01b Low 11b High

OBSOLETE

39.2.51 VDACx_CR

Voltage DAC Control Register

Individual Register Names and Addresses:

VDAC0_CR : 0,C0h VDAC1_CR : 0,C4h VDAC2_CR : 0,C8h VDAC3_CR : 0,CCh
VDAC4_CR : 0,A0h VDAC5_CR : 0,A4h VDAC6_CR : 0,9Ch

	7	6	5	4	3	2	1	0
Access : POR							RW : 0	RW : 0
Bit Name							MODE	EN

This register enables and sets the mode for the VDAC8. VDAC0_CR to VDAC3_CR control the hysteretic channel 0 to hysteretic channel 3. VDAC4_CR to VDAC6_CR are the DAC bank registers. The unused bits of this register will return the last data bus value when read and should be masked off prior to using this information.

Table 39-3. VDACx_CR Register Mapping

VDAC0_CR	Control Register for Hysteretic Channel 0 VDACs, REF_A (VDAC0) and REF_B (VDAC1)
VDAC1_CR	Control Register for Hysteretic Channel 1 VDACs, REF_A (VDAC2) and REF_B (VDAC3)
VDAC2_CR	Control Register for Hysteretic Channel 2 VDACs, REF_A (VDAC4) and REF_B (VDAC5)
VDAC3_CR	Control Register for Hysteretic Channel 3 VDACs, REF_A (VDAC6) and REF_B(VDAC7)
VDAC4_CR	Control Register for DAC Bank VDAC8 and VDAC9
VDAC5_CR	Control Register for DAC Bank VDAC10 and VDAC11
VDAC6_CR	Control Register for DAC Bank VDAC12 and VDAC13

Bit	Name	Description
1	**MODE**	VDAC output range and step size. 0 VAREF x output range = 0 to 2.6V (10 mV step size) 1 VAREF x output range = 0 to 1.3V (5 mV step size)
0	**EN**	Disable VDAC. This powers down the VDAC. All of its output references go to 0V. 0 Disables the VDAC 1 Enables the VDAC

Note VDAC3_CR is not applicable in CY8CLED01D01 (1 channel PowerPSoC), CY8CLED02D01 (2 channel PowerPSoC) and CY8CLED03D/G0x (3 channel PowerPSoC) devices.

VDAC2_CR is not applicable in CY8CLED01D01 (1 channel PowerPSoC) and CY8CLED02D01 (2 channel PowerPSoC) devices.

VDAC1_CR is not applicable in CY8CLED01D01 (1 channel PowerPSoC) device.

OBSOLETE

39.2.52 VDACx_DR0

Voltage DAC Data Register 0

Individual Register Names and Addresses:

VDAC0_DR0 : 0,C1h VDAC1_DR0 : 0,C5h VDAC2_DR0 : 0,C9h VDAC3_DR0 : 0,CDh
VDAC4_DR0 : 0,A1h VDAC5_DR0 : 0,A5h VDAC6_DR0 : 0,9Dh

Note VDAC3_DR0 is not applicable in CY8CLED01D01 (1 channel PowerPSoC), CY8CLED02D01 (2 channel PowerPSoC) and CY8CLED03D/G0x (3 channel PowerPSoC) devices.

VDAC2_DR0 is not applicable in CY8CLED01D01 (1 channel PowerPSoC) and CY8CLED02D01 (2 channel PowerPSoC) devices.

VDAC1_DR0 is not applicable in the CY8CLED01D01 (1 channel PowerPSoC) device.

	7	6	5	4	3	2	1	0
Access : POR	RW : 00							
Bit Name	DATA[7:0]							

This register sets the voltage reference for VAREF0 of the DAC, thereby providing analog output equivalent to digital code. VDAC0_DR0 to VDAC3_DR0 control the hysteretic channel 0 to hysteretic channel 3. VDAC4_DR0 to VDAC6_DR0 are the DAC BANK registers.

Table 39-4. VDACx_DR0 Register Mapping

VDAC0_DR0	Data Register for Hysteretic Channel 0 VDAC, REF_A (VDAC0)
VDAC1_DR0	Data Register for Hysteretic Channel 1 VDAC, REF_A (VDAC2)
VDAC2_DR0	Data Register for Hysteretic Channel 2 VDAC, REF_A (VDAC4)
VDAC3_DR0	Data Register for Hysteretic Channel 3 VDAC, REF_A (VDAC6)
VDAC4_DR0	Data Register for DAC Bank VDAC9
VDAC5_DR0	Data Register for DAC Bank VDAC11
VDAC6_DR0	Data Register for DAC Bank VDAC13

Bit	Name	Description	
7:0	**DATA[7:0]**	00h	Lowest reference voltage setting (0V)
		80h	Mid reference voltage setting
		ffh	Highest reference voltage setting
		The VDAC range is determined by the MODE bit set in the VDACx_CR register. The highest reference setting is 1.3V for MODE = 1 or 2.6V for Mode = 0.	

OBSOLETE

39.2.53 VDACx_DR1

Voltage DAC Data Register 1

Individual Register Names and Addresses:

VDAC0_DR1 : 0,C2h VDAC1_DR1 : 0,C6h VDAC2_DR1 : 0,CAh VDAC3_DR1 : 0,CEh
VDAC4_DR1 : 0,A2h VDAC6_DR1 : 0,A6h VDAC6_DR1 : 0,9Eh

	7	6	5	4	3	2	1	0
Access : POR	RW : 00							
Bit Name	DATA[7:0]							

This register sets the voltage reference for VAREF1 of the DAC, thereby providing analog output equivalent to digital code. VDAC0_DR1 to VDAC3_DR1 control the hysteretic channel 0 to hysteretic channel 3. VDAC4_DR1 to VDAC6_DR1 are the DAC bank register.

Table 39-5. VDACx_DR1 Register Mapping

VDAC0_DR1	Data Register for Hysteretic Channel 0 VDAC, REF_B (VDAC1)
VDAC1_DR1	Data Register for Hysteretic Channel 1 VDAC, REF_B (VDAC3)
VDAC2_DR1	Data Register for Hysteretic Channel 2 VDAC, REF_B (VDAC5)
VDAC3_DR1	Data Register for Hysteretic Channel 3 VDAC, REF_B (VDAC7)
VDAC4_DR1	Data Register for DAC Bank VDAC8
VDAC5_DR1	Data Register for DAC Bank VDAC10
VDAC6_DR1	Data Register for DAC Bank VDAC12

Bit	Name	Description
7:0	**DATA[7:0]**	00h Lowest reference voltage setting (0V) 80h Mid reference voltage setting ffh Highest reference voltage setting The VDAC range is determined by the MODE bit set in the VDACx_CR register. The highest reference setting is 1.3V for MODE = 1 or 2.6V for Mode = 0.

Note VDAC3_DR1 is not applicable in CY8CLED01D01 (1 channel PowerPSoC), CY8CLED02D01 (2 channel PowerPSoC) and CY8CLED03D/G0x (3 channel PowerPSoC) devices.

VDAC2_DR1 is not applicable in CY8CLED01D01 (1 channel PowerPSoC) and CY8CLED02D01 (2 channel PowerPSoC) devices.

VDAC1_DR1 is not applicable in the CY8CLED01D01 (1 channel PowerPSoC) device.

OBSOLETE

39.2.54 MULx_X

Multiply Input X Register

Individual Register Names and Addresses:

MUL1_X : 0,A8h MUL0_X : 0,E8h

	7	6	5	4	3	2	1	0
Access : POR	W : XX							
Bit Name	Data[7:0]							

This register is one of two multiplicand registers for the signed 8-bit multiplier in the PSoC MAC.

For additional information, refer to the “Register Definitions” on page 226 in the Multiply Accumulate chapter.

Bit	Name	Description
7:0	**Data[7:0]**	X multiplicand for MAC 8-bit multiplier.

OBSOLETE

39.2.55 MULx_Y

Multiply Input Y Register

Individual Register Names and Addresses:

MUL1_Y : 0,A9h MUL0_Y : 0,E9h

	7	6	5	4	3	2	1	0
Access : POR	W : XX							
Bit Name	Data[7:0]							

This register is one of two multiplicand registers for the signed 8-bit multiplier in the PSoC MAC.

For additional information, refer to the "Register Definitions" on page 226 in the Multiply Accumulate chapter.

Bit	Name	Description
7:0	**Data[7:0]**	Y multiplicand for MAC 8-bit multiplier.

OBSOLETE

39.2.56 MULx_DH

Multiply Result High Byte Register

Individual Register Names and Addresses:

MUL1_DH : 0,AAh MUL0_DH : 0,EAh

	7	6	5	4	3	2	1	0
Access : POR	R : XX							
Bit Name	Data[7:0]							

This register holds the most significant byte of the 16-bit product.

For additional information, refer to the “Register Definitions” on page 226 in the Multiply Accumulate chapter.

Bit	Name	Description
7:0	**Data[7:0]**	High byte of MAC multiplier 16-bit product.

OBSOLETE

39.2.57 MULx_DL

Multiply Result Low Byte Register

Individual Register Names and Addresses:

MUL1_DL : 0,ABh MUL0_DL : 0,EBh

	7	6	5	4	3	2	1	0
Access : POR	R : XX							
Bit Name	Data[7:0]							

This register holds the least significant byte of the 16-bit product.

For additional information, refer to the “Register Definitions” on page 226 in the Multiply Accumulate chapter.

Bit	Name	Description
7:0	**Data[7:0]**	Low byte of MAC multiplier 16-bit product.

OBSOLETE

39.2.58 MACx_X/ACCx_DR1

Accumulator Data Register 1

Individual Register Names and Addresses:

MAC1_X/ACC1_DR1 : 0,ACh MAC0_X/ACC0_DR1 : 0,ECh

	7	6	5	4	3	2	1	0
Access : POR	RW : 00							
Bit Name	Data[7:0]							

This is the multiply accumulate X register and the second byte of the accumulated value.

For additional information, refer to the “Register Definitions” on page 226 in the Multiply Accumulate chapter.

Bit	Name	Description	
7:0	**Data[7:0]**	Read	Returns the 2nd byte of the 32-bit accumulated value. The 2nd byte is next to the least significant byte for the accumulated value.
		Write	X multiplicand for the MAC 16-bit multiply and 32-bit accumulator.

OBSOLETE

39.2.59 MACx_Y/ACCx_DR0

Accumulator Data Register 0

Individual Register Names and Addresses:

MAC1_Y/ACC1_DR0 : 0,ADh MAC0_Y/ACC0_DR0 : 0,EDh

	7	6	5	4	3	2	1	0
Access : POR	RW : 00							
Bit Name	Data[7:0]							

This is the multiply accumulate Y register and the first byte of the accumulated value.

For additional information, refer to the "Register Definitions" on page 226 in the Multiply Accumulate chapter.

Bit	Name	Description	
7:0	**Data[7:0]**	Read	Returns the 1st byte of the 32-bit accumulated value. The 1st byte is the least significant byte for the accumulated value.
		Write	Y multiplicand for the MAC 16-bit multiply and 32-bit accumulate.

OBSOLETE

39.2.60 MACx_CL0/ACCx_DR3

Accumulator Data Register 3

Individual Register Names and Addresses:

MAC1_CL0/ACC1_DR3 : 0,AEh MAC0_CL0/ACC0_DR3 : 0,EEh

	7	6	5	4	3	2	1	0
Access : POR	RW : 00							
Bit Name	Data[7:0]							

This is an accumulator clear register and the fourth byte of the accumulated value.

For additional information, refer to the "Register Definitions" on page 226 in the Multiply Accumulate chapter.

Bit	Name	Description	
7:0	**Data[7:0]**	Read	Returns the 4th byte of the 32-bit accumulated value. The 4th byte is the ***most significant byte (MSB)*** for the accumulated value.
		Write	Writing any value to this address will clear all four bytes of the Accumulator.

OBSOLETE

39.2.61 MACx_CL1/ACCx_DR2

Accumulator Data Register 2

Individual Register Names and Addresses:

MAC1_CL1/ACC1_DR2 : 0,AFh MAC0_CL1/ACC0_DR2 : 0,EFh

	7	6	5	4	3	2	1	0
Access : POR	RW : 00							
Bit Name	Data[7:0]							

This is an accumulator clear register and the third byte of the accumulated value.

For additional information, refer to the "Register Definitions" on page 226 in the Multiply Accumulate chapter.

Bit	Name	Description	
7:0	**Data[7:0]**	Read	Returns the 3rd byte of the 32-bit accumulated value. The 3rd byte is the next to most significant byte for the accumulated value.
		Write	Writing any value to this address will clear all four bytes of the Accumulator.

OBSOLETE

39.2.62 RDIxRI

Row Digital Interconnect Row Input Register

Individual Register Names and Addresses:

RDI0RI : x,B0h RDI1RI : x,B8h

	7	6	5	4	3	2	1	0
Access : POR	RW : 0		RW : 0		RW : 0		RW : 0	
Bit Name	RI3[1:0]		RI2[1:0]		RI1[1:0]		RI0[1:0]	

This register is used to control the input mux that determines which global inputs will drive the row inputs.

The 'x' in the digital register's name represents the digital row index. For additional information, refer to the "Register Definitions" on page 117 in the Row Digital Interconnect chapter.

Bit	Name	Description
7:6	**RI3[1:0]**	Select source for row input 3. 00b GIE[3] 01b GIE[7] 10b GIO[3] 11b GIO[7]
5:4	**RI2[1:0]**	Select source for row input 2. 00b GIE[2] 01b GIE[6] 10b GIO[2] 11b GIO[6]
3:2	**RI1[1:0]**	Select source for row input 1. 00b GIE[1] 01b GIE[5] 10b GIO[1] 11b GIO[5]
1:0	**RI0[1:0]**	Select source for row input 0. 00b GIE[0] 01b GIE[4] 10b GIO[0] 11b GIO[4]

OBSOLETE

39.2.63 RDIxSYN

Row Digital Interconnect Synchronization Register

Individual Register Names and Addresses:

RDI0SYN : x,B1h RDI1SYN : x,B9h

	7	6	5	4	3	2	1	0
Access : POR					RW : 0	RW : 0	RW : 0	RW : 0
Bit Name					RI3SYN	RI2SYN	RI1SYN	RI0SYN

This register is used to control the input synchronization.

The 'x' in the digital register's name represents the digital row index. In the table above, note that reserved bits are grayed table cells and are not described in the bit description section below. Reserved bits should always be written with a value of '0'. For additional information, refer to the "Register Definitions" on page 117 in the Row Digital Interconnect chapter.

Bit	Name		Description
3	**RI3SYN**	0	Row input 3 is synchronized to the SYSCLK system clock.
		1	Row input 3 is passed without synchronization.
2	**RI2SYN**	0	Row input 2 is synchronized to the SYSCLK system clock.
		1	Row input 2 is passed without synchronization.
1	**RI1SYN**	0	Row input 1 is synchronized to the SYSCLK system clock.
		1	Row input 1 is passed without synchronization.
0	**RI0SYN**	0	Row input 0 is synchronized to the SYSCLK system clock.
		1	Row input 0 is passed without synchronization.

OBSOLETE

39.2.64 RDIxIS

Row Digital Interconnect Input Select Register

Individual Register Names and Addresses:

RDI0IS : x,B2h RDI1IS : x,BAh

	7	6	5	4	3	2	1	0
Access : POR			RW : 0		RW : 0	RW : 0	RW : 0	RW : 0
Bit Name			BCSEL[1:0]		IS3	IS2	IS1	IS0

This register is used to configure the inputs to the digital row LUTS and select a broadcast driver from another row if present.

The 'x' in the digital register's name represents the digital row index. In the table above, note that reserved bits are grayed table cells and are not described in the bit description section below. Reserved bits should always be written with a value of '0'. For additional information, refer to the "Register Definitions" on page 117 in the Row Digital Interconnect chapter.

Bit	Name	Description
5:4	**BCSEL[1:0]**	When the BCSEL value is equal to the row number, the ***tri-state*** buffer that drives the row broadcast ***net*** from the input select mux is disabled, so that one of the row's blocks may drive the local row broadcast net. 00b Row 0 drives row broadcast net. 01b Row 1 drives row broadcast net. 10b Reserved. 11b Reserved.
3	**IS3**	0 The 'A' input of LUT3 is RO[3]. 1 The 'A' input of LUT3 is RI[3].
2	**IS2**	0 The 'A' input of LUT2 is RO[2]. 1 The 'A' input of LUT2 is RI[2].
1	**IS1**	0 The 'A' input of LUT1 is RO[1]. 1 The 'A' input of LUT1 is RI[1].
0	**IS0**	0 The 'A' input of LUT0 is RO[0]. 1 The 'A' input of LUT0 is RI[0].

OBSOLETE

39.2.65 RDIxLT0

Row Digital Interconnect Logic Table Register 0

Individual Register Names and Addresses:

RDI0LT0 : x,B3h RDI1LT0 : x,BBh

	7	6	5	4	3	2	1	0
Access : POR	RW : 0				RW : 0			
Bit Name	LUT1[3:0]				LUT0[3:0]			

This register is used to select the logic function of the digital row LUTS.

The 'x' in the digital register's name represents the digital row index. For additional information, refer to the "Register Definitions" on page 117 in the Row Digital Interconnect chapter.

Bit	Name	Description
7:4	**LUT1[3:0]**	Select ***logic function*** for LUT1. **Function** 0h FALSE 1h A AND B 2h A AND $\overline{B}$ 3h $\overline{A}$ 4h $\overline{A}$ AND B 5h B 6h A XOR B 7h A OR B 8h A NOR B 9h $\overline{A}$ XNOR B Ah $\overline{B}$ Bh $\overline{A}$ OR $\overline{B}$ Ch $\overline{A}$ Dh $\overline{A}$ OR B Eh A NAND B Fh TRUE
3:0	**LUT0[3:0]**	Select logic function for LUT0. **Function** 0h FALSE 1h A AND B 2h A AND $\overline{B}$ 3h $\overline{A}$ 4h $\overline{A}$ AND B 5h B 6h A XOR B 7h A OR B 8h A NOR B 9h $\overline{A}$ XNOR B Ah $\overline{B}$ Bh $\overline{A}$ OR $\overline{B}$ Ch $\overline{A}$ Dh $\overline{A}$ OR B Eh A NAND B Fh TRUE

OBSOLETE

39.2.66 RDIxLT1

Row Digital Interconnect Logic Table Register 1

Individual Register Names and Addresses:

RDI0LT1 : x,B4h RDI1LT1 : x,BCh

	7	6	5	4	3	2	1	0
Access : POR	RW : 0				RW : 0			
Bit Name	LUT3[3:0]				LUT2[3:0]			

This register is used to select the logic function of the digital row LUTS.

The 'x' in the digital register's name represents the digital row index. For additional information, refer to the "Register Definitions" on page 117 in the Row Digital Interconnect chapter.

Bit	Name	Description
7:4	LUT3[3:0]	Select logic function for LUT3. **Function** 0h FALSE 1h A AND $\overline{B}$ 2h $\overline{A}$ AND B 3h $\overline{A}$ 4h A AND B 5h B 6h A XOR B 7h A OR B 8h A NOR B 9h $\overline{A}$ XNOR B Ah $\overline{B}$ Bh $\overline{A}$ OR B Ch $\overline{A}$ Dh $\overline{A}$ OR B Eh A NAND B Fh TRUE
3:0	LUT2[3:0]	Select logic function for LUT2. **Function** 0h FALSE 1h A AND $\overline{B}$ 2h $\overline{A}$ AND B 3h $\overline{A}$ 4h A AND B 5h B 6h A XOR B 7h A OR B 8h A NOR B 9h $\overline{A}$ XNOR B Ah $\overline{B}$ Bh $\overline{A}$ OR B Ch $\overline{A}$ Dh $\overline{A}$ OR B Eh A NAND B Fh TRUE

OBSOLETE

39.2.67 RDIxRO0

Row Digital Interconnect Row Output Register 0

Individual Register Names and Addresses:

RDI0RO0 : x,B5h RDI1RO0 : x,BDh

	7	6	5	4	3	2	1	0
Access : POR	RW : 0	RW : 0	RW : 0	RW : 0	RW : 0	RW : 0	RW : 0	RW : 0
Bit Name	GOO5EN	GOO1EN	GOE5EN	GOE1EN	GOO4EN	GOO0EN	GOE4EN	GOE0EN

This register is used to select the global nets that the row outputs drive.

The 'x' in the digital register's name represents the digital row index. For additional information, refer to the "Register Definitions" on page 117 in the Row Digital Interconnect chapter.

Bit	Name	Description	
7	**GOO5EN**	0	Disable Row's LUT1 output to global output.
		1	Enable Row's LUT1 output to GOO[5].
6	**GOO1EN**	0	Disable Row's LUT1 output to global output.
		1	Enable Row's LUT1 output to GOO[1].
5	**GOE5EN**	0	Disable Row's LUT1 output to global output.
		1	Enable Row's LUT1 output to GOE[5].
4	**GOE1EN**	0	Disable Row's LUT1 output to global output.
		1	Enable Row's LUT1 output to GOE[1].
3	**GOO4EN**	0	Disable Row's LUT0 output to global output.
		1	Enable Row's LUT0 output to GOO[4].
2	**GOO0EN**	0	Disable Row's LUT0 output to global output.
		1	Enable Row's LUT0 output to GOO[0].
1	**GOE4EN**	0	Disable Row's LUT0 output to global output.
		1	Enable Row's LUT0 output to GOE[4].
0	**GOE0EN**	0	Disable Row's LUT0 output to global output.
		1	Enable Row's LUT0 output to GOE[0].

OBSOLETE

39.2.68 RDIxRO1

Row Digital Interconnect Row Output Register 1

Individual Register Names and Addresses:

RDI0RO1 : x,B6h RDI1RO1 : x,BEh

	7	6	5	4	3	2	1	0
Access : POR	RW : 0	RW : 0	RW : 0	RW : 0	RW : 0	RW : 0	RW : 0	RW : 0
Bit Name	GOO7EN	GOO3EN	GOE7EN	GOE3EN	GOO6EN	GOO2EN	GOE6EN	GOE2EN

This register is used to select the global nets that the row outputs drive.

The 'x' in the digital register's name represents the digital row index. For additional information, refer to the "Register Definitions" on page 117 in the Row Digital Interconnect chapter.

Bit	Name		Description
7	**GOO7EN**	0	Disable Row's LUT3 output to global output.
		1	Enable Row's LUT3 output to GOO[7].
6	**GOO3EN**	0	Disable Row's LUT3 output to global output.
		1	Enable Row's LUT3 output to GOO[3].
5	**GOE7EN**	0	Disable Row's LUT3 output to global output.
		1	Enable Row's LUT3 output to GOE[7].
4	**GOE3EN**	0	Disable Row's LUT3 output to global output.
		1	Enable Row's LUT3 output to GOE[3].
3	**GOO6EN**	0	Disable Row's LUT2 output to global output.
		1	Enable Row's LUT2 output to GOO[6].
2	**GOO2EN**	0	Disable Row's LUT2 output to global output.
		1	Enable Row's LUT2 output to GOO[2].
1	**GOE6EN**	0	Disable Row's LUT2 output to global output.
		1	Enable Row's LUT2 output to GOE[6].
0	**GOE2EN**	0	Disable Row's LUT2 output to global output.
		1	Enable Row's LUT2 output to GOE[2].

OBSOLETE

39.2.69 CUR_PP

Current Page Pointer Register

Individual Register Names and Addresses:

CUR_PP: 0,D0h

	7	6	5	4	3	2	1	0
Access : POR						RW : 0		
Bit Name						Page Bits[2:0]		

This register is used to set the effective SRAM page for normal memory accesses in a multi-SRAM page PowerPSoC device.

In the table above, note that reserved bits are grayed table cells and are not described in the bit description section below. Reserved bits should always be written with a value of '0'. For additional information, refer to the "Register Definitions" on page 66 in the RAM Paging chapter.

Bit	Name	Description
2:0	**Page Bits[2:0]**	These bits determine which SRAM Page is used for generic SRAM access. See the RAM Paging chapter on page 63 for more information. 000b SRAM Page 0 001b SRAM Page 1 010b SRAM Page 2 011b SRAM Page 3 100b Reserved 101b Reserved 110b Reserved 111b Reserved **Note** A value beyond the available SRAM, for a specific PowerPSoC device, should not be set.

OBSOLETE

39.2.70 STK_PP

Stack Page Pointer Register

Individual Register Names and Addresses:

STK_PP: 0,D1h

	7	6	5	4	3	2	1	0
Access : POR						RW : 0		
Bit Name						Page Bits[2:0]		

This register is used to set the effective SRAM page for stack memory accesses in a multi-SRAM page PowerPSoC device.

In the table above, note that reserved bits are grayed table cells and are not described in the bit description section below. Reserved bits should always be written with a value of '0'. For additional information, refer to the "Register Definitions" on page 66 in the RAM Paging chapter.

Bit	Name	Description
2:0	**Page Bits[2:0]**	These bits determine which SRAM Page is used to hold the stack. See the RAM Paging chapter on page 63 for more information. 000b SRAM Page 0 001b SRAM Page 1 010b SRAM Page 2 011b SRAM Page 3 100b Reserved 101b Reserved 110b Reserved 111b Reserved **Note** A value beyond the available SRAM, for a specific PowerPSoC device, should not be set.

OBSOLETE

39.2.71 IDX_PP

Indexed Memory Access Page Pointer Register

Individual Register Names and Addresses:

IDX_PP: 0,D3h

	7	6	5	4	3	2	1	0
Access : POR						RW : 0		
Bit Name						Page Bits[2:0]		

This register is used to set the effective SRAM page for indexed memory accesses in a multi-SRAM page PowerPSoC device.

In the table above, note that reserved bits are grayed table cells and are not described in the bit description section below. Reserved bits should always be written with a value of '0'. For additional information, refer to the "Register Definitions" on page 66 in the RAM Paging chapter.

Bit	Name	Description
2:0	**Page Bits[2:0]**	These bits determine which SRAM Page an indexed memory access operates on. See the "Register Definitions" on page 66 for more information on when this register is active. 000b SRAM Page 0 001b SRAM Page 1 010b SRAM Page 2 011b SRAM Page 3 100b Reserved 101b Reserved 110b Reserved 111b Reserved **Note** A value beyond the available SRAM, for a specific PowerPSoC device, should not be set.

OBSOLETE

39.2.72 MVR_PP

MVI Read Page Pointer Register

Individual Register Names and Addresses:

MVR_PP: 0,D4h

	7	6	5	4	3	2	1	0
Access : POR						RW : 0		
Bit Name						Page Bits[2:0]		

This register is used to set the effective SRAM page for MVI read memory accesses in a multi-SRAM page PowerPSoC device.

In the table above, note that reserved bits are grayed table cells and are not described in the bit description section below. Reserved bits should always be written with a value of '0'. For additional information, refer to the "Register Definitions" on page 66 in the RAM Paging chapter.

Bit	Name	Description
2:0	**Page Bits[2:0]**	These bits determine which SRAM Page a MVI Read instruction operates on. 000b SRAM Page 0 001b SRAM Page 1 010b SRAM Page 2 011b SRAM Page 3 100b Reserved 101b Reserved 110b Reserved 111b Reserved **Note** A value beyond the available SRAM, for a specific PowerPSoC device, should not be set.

OBSOLETE

39.2.73 MVW_PP

MVI Write Page Pointer Register

Individual Register Names and Addresses:

MVW_PP: 0,D5h

	7	6	5	4	3	2	1	0
Access : POR						RW : 0		
Bit Name						Page Bits[2:0]		

This register is used to set the effective SRAM page for MVI write memory accesses in a multi-SRAM page PowerPSoC device.

In the table above, note that reserved bits are grayed table cells and are not described in the bit description section below. Reserved bits should always be written with a value of '0'. For additional information, refer to the "Register Definitions" on page 66 in the RAM Paging chapter.

Bit	Name	Description
2:0	**Page Bits[2:0]**	These bits determine which SRAM Page a MVI Write instruction operates on. 000b SRAM Page 0 001b SRAM Page 1 010b SRAM Page 2 011b SRAM Page 3 100b Reserved 101b Reserved 110b Reserved 111b Reserved **Note** A value beyond the available SRAM, for a specific PowerPSoC device, should not be set.

OBSOLETE

39.2.74 I2C_CFG

I²C Configuration Register

Individual Register Names and Addresses:

I2C_CFG: 0,D6h

	7	6	5	4	3	2	1	0
Access : POR		RW : 0	RW : 0	RW : 0	RW : 0		RW : 0	RW : 0
Bit Name		PSelect	Bus Error IE	Stop IE	Clock Rate[1:0]		Enable Master	Enable Slave

This register is used to set the basic operating modes, baud rate, and selection of interrupts.

In the table above, note that reserved bits are grayed table cells and are not described in the bit description section below. Reserved bits should always be written with a value of '0'. For additional information, refer to the "Register Definitions" on page 240 in the I2C chapter.

Bit	Name	Description
6	**PSelect**	I2C Pin Select 0 P1[5] and P1[7] 1 P1[0] and P1[1] **Note** Read the I2C chapter for a discussion of the side effects of choosing the P1[0] and P1[1] pair of pins.
5	**Bus Error IE**	Bus Error Interrupt Enable 0 Disabled 1 Enabled. An interrupt is generated on the detection of a Bus Error.
4	**Stop IE**	Stop Interrupt Enable 0 Disabled 1 Enabled. An interrupt is generated on the detection of a Stop Condition.
3:2	**Clock Rate[1:0]**	00b 100K Standard Mode 01b 400K Fast Mode 10b 50K Standard Mode 11b Reserved
1	**Enable Master**	Writing a '0' to both the Enable Master and Enable Slave bits will hold the I2C hardware in reset. 0 Disabled 1 Enabled
0	**Enable Slave**	Writing a '0' to both the Enable Master and Enable Slave bits will hold the I2C hardware in reset. 0 Disabled 1 Enabled

OBSOLETE

39.2.75 I2C_SCR

I²C Status and Control Register

Individual Register Names and Addresses:

I2C_SCR: 0,D7h

	7	6	5	4	3	2	1	0
Access : POR	RC : 0	RC : 0	RC : 0	RW : 0	RC : 0	RW : 0	RC : 0	RC : 0
Bit Name	Bus Error	Lost Arb	Stop Status	ACK	Address	Transmit	LRB	Byte Complete

This register is used by both master and slave to control the flow of data bytes and to keep track of the bus state during a transfer.

Bits in this register are held in reset until one of the enable bits in I2C_CFG is set. For additional information, refer to the "Register Definitions" on page 240 in the I2C chapter.

Bit	Name	Description
7	**Bus Error**	0 This status bit must be cleared by firmware by writing a '0' to the bit position. It is never cleared by the hardware. 1 A misplaced Start or Stop condition was detected.
6	**Lost Arb**	0 This bit is set immediately on lost arbitration; however, it does not cause an interrupt. This status may be checked after the following Byte Complete interrupt. Any Start detect or a write to the Start or Restart generate bits (I2C_MSCR register), when operating in Master mode, will also clear the bit. 1 Lost Arbitration
5	**Stop Status**	0 This status bit must be cleared by firmware with write of '0' to the bit position. It is never cleared by the hardware. 1 A Stop condition was detected.
4	**ACK**	Acknowledge Out. This bit is automatically cleared by hardware on a Byte Complete event. 0 NACK the last received byte. 1 ACK the last received byte
3	**Address**	0 This status bit must be cleared by firmware with write of '0' to the bit position. 1 The received byte is a slave address.
2	**Transmit**	Transmit bit is set by firmware to define the direction of the byte transfer. Any Start detect or a write to the Start or Restart generate bits, when operating in Master mode, will also clear the bit. 0 Receive mode 1 Transmit mode
1	**LRB**	Last Received Bit. The value of the 9th bit in a Transmit sequence, which is the acknowledge bit from the receiver. Any Start detect or a write to the Start or Restart generate bits, when operating in Master mode, will also clear the bit. 0 Last transmitted byte was ACK'ed by the receiver. 1 Last transmitted byte was NACK'ed by the receiver.

(continued on next page)

OBSOLETE

39.2.75 I2C_SCR *(continued)*

0 **Byte Complete**

Transmit/Receive Mode:
0 No completed transmit/receive since last cleared by firmware. Any Start detect or a write to the Start or Restart generate bits, when operating in Master mode, will also clear the bit.

Transmit Mode:
1 Eight bits of data have been transmitted and an ACK or NACK has been received.

Receive Mode:
1 Eight bits of data have been received.

OBSOLETE

39.2.76 I2C_DR

I²C Data Register

Individual Register Names and Addresses:

I2C_DR: 0,D8h

	7	6	5	4	3	2	1	0
Access : POR	RW : 00							
Bit Name	Data[7:0]							

This register provides read/write access to the Shift register.

This register is read only for received data and write only for transmitted data. For additional information, refer to the “Register Definitions” on page 240 in the I2C chapter.

Bit	Name	Description
7:0	**Data[7:0]**	Read received data or write data to transmit.

OBSOLETE

39.2.77 I2C_MSCR

I²C Master Status and Control Register

Individual Register Names and Addresses:

I2C_MSCR: 0,D9h

	7	6	5	4	3	2	1	0
Access : POR					R : 0	R : 0	RW : 0	RW : 0
Bit Name					Bus Busy	Master Mode	Restart Gen	Start Gen

This register implements I2C framing controls and provides Bus Busy status.

Bits in this register are held in reset until one of the enable bits in I2C_CFG is set. In the table above, note that reserved bits are grayed table cells and are not described in the bit description section below. Reserved bits should always be written with a value of '0'. For additional information, refer to the "Register Definitions" on page 240 in the I2C chapter.

Bit	Name	Description
3	**Bus Busy**	This bit is set to the following. 0 When a Stop condition is detected (from any bus master). 1 When a Start condition is detected (from any bus master).
2	**Master Mode**	This bit is set/cleared by hardware when the device is operating as a master. 0 Stop condition detected, generated by this device. 1 Start condition detected, generated by this device.
1	**Restart Gen**	This bit is cleared by hardware when the Restart generation is complete. 0 Restart generation complete. 1 Generate a Restart condition.
0	**Start Gen**	This bit is cleared by hardware when the Start generation is complete. 0 Start generation complete. 1 Generate a Start condition and send a byte (address) to the I2C bus, if bus is not busy.

OBSOLETE

39.2.78 INT_CLR0

Interrupt Clear Register 0

Individual Register Names and Addresses:

INT_CLR0: 0,DAh

	7	6	5	4	3	2	1	0
Access : POR	RW : 0	RW : 0	RW : 0	RW : 0		RW : 0	RW : 0	RW : 0
Bit Name	VC3	Sleep	GPIO	UVLO		Analog 1	Analog 0	V Monitor

This register is used to enable the individual interrupt sources' ability to clear posted interrupts.

When bits in this register are read, a '1' will be returned for every bit position that has a corresponding posted interrupt. When bits in this register are written with a '0' and ENSWINT is not set, posted interrupts will be cleared at the corresponding bit positions. If there was not a posted interrupt, there is no effect. When bits in this register are written with a '1' and ENSWINT is set, an interrupt is posted in the interrupt controller. Note that the ENSWINT bit is in the INT_MSK3 register on page 452.

Use the register tables above, in addition to the detailed register bit descriptions below, to determine which bits are reserved for PowerPSoC devices. Note that reserved bits are grayed table cells and are not described in the bit description section. Reserved bits should always be written with a value of '0'. For additional information, refer to the "Register Definitions" on page 74 in the Interrupt Controller chapter.

Bit	Name	Description	
7	**VC3**	Read 0	No posted interrupt for Variable Clock 3.
		Read 1	Posted interrupt present for Variable Clock 3.
		Write 0 AND ENSWINT = 0	Clear posted interrupt if it exists.
		Write 1 AND ENSWINT = 0	No effect.
		Write 0 AND ENSWINT = 1	No effect.
		Write 1 AND ENSWINT = 1	Post an interrupt for Variable Clock 3.
6	**Sleep**	Read 0	No posted interrupt for sleep timer.
		Read 1	Posted interrupt present for sleep timer.
		Write 0 AND ENSWINT = 0	Clear posted interrupt if it exists.
		Write 1 AND ENSWINT = 0	No effect.
		Write 0 AND ENSWINT = 1	No effect.
		Write 1 AND ENSWINT = 1	Post an interrupt for sleep timer.
5	**GPIO**	Read 0	No posted interrupt for general purpose inputs and outputs (pins).
		Read 1	Posted interrupt present for GPIO (pins).
		Write 0 AND ENSWINT = 0	Clear posted interrupt if it exists.
		Write 1 AND ENSWINT = 0	No effect.
		Write 0 AND ENSWINT = 1	No effect.
		Write 1 AND ENSWINT = 1	Post an interrupt for general purpose inputs and outputs (pins).

(continued on next page)

OBSOLETE

39.2.78 INT_CLR0 *(continued)*

4	**UVLO**	Read 0	No posted interrupt for switching regulator UVLO.
		Read 1	Posted interrupt present for switching regulator UVLO.
		Write 0 AND ENSWINT = 0	Clear posted interrupt if it exists.
		Write 1 AND ENSWINT = 0	No effect.
		Write 0 AND ENSWINT = 1	No effect.
		Write 1 AND ENSWINT = 1	Post an interrupt for switching regulator UVLO.
2	**Analog 1**	Read 0	No posted interrupt for analog columns.
		Read 1	Posted interrupt present for analog columns
		Write 0 AND ENSWINT = 0	Clear posted interrupt if it exists.
		Write 1 AND ENSWINT = 0	No effect.
		Write 0 AND ENSWINT = 1	No effect.
		Write 1 AND ENSWINT = 1	Post an interrupt for analog columns.
1	**Analog 0**	Read 0	No posted interrupt for analog columns.
		Read 1	Posted interrupt present for analog columns
		Write 0 AND ENSWINT = 0	Clear posted interrupt if it exists.
		Write 1 AND ENSWINT = 0	No effect.
		Write 0 AND ENSWINT = 1	No effect.
		Write 1 AND ENSWINT = 1	Post an interrupt for analog columns.
0	**V Monitor**	Read 0	No posted interrupt for supply voltage monitor.
		Read 1	Posted interrupt present for supply voltage monitor.
		Write 0 AND ENSWINT = 0	Clear posted interrupt if it exists.
		Write 1 AND ENSWINT = 0	No effect.
		Write 0 AND ENSWINT = 1	No effect.
		Write 1 AND ENSWINT = 1	Post an interrupt for supply voltage monitor.

OBSOLETE

39.2.79 INT_CLR1

Interrupt Clear Register 1

Individual Register Names and Addresses:

INT_CLR1: 0,DBh

	7	6	5	4	3	2	1	0
Access : POR	RW : 0	RW : 0	RW : 0	RW : 0	RW : 0	RW : 0	RW : 0	RW : 0
Bit Name	DCB13	DCB12	DBB11	DBB10	DCB03	DCB02	DBB01	DBB00

This register is used to clear posted interrupts for digital blocks or generate interrupts.

When bits in this register are read, a '1' will be returned for every bit position that has a corresponding posted interrupt. When bits in this register are written with a '0' and ENSWINT is not set, posted interrupts will be cleared at the corresponding bit positions. If there was not a posted interrupt, there is no effect. When bits in this register are written with a '1' and ENSWINT is set, an interrupt is posted in the interrupt controller. Note that the ENSWINT bit is in the INT_MSK3 register on page 452.

Bit	Name	Description
7	**DCB13**	Digital Communications Block type B, row 1, position 3. Read 0 No posted interrupt. Read 1 Posted interrupt present. Write 0 AND ENSWINT = 0 Clear posted interrupt if it exists. Write 1 AND ENSWINT = 0 No effect. Write 0 AND ENSWINT = 1 No effect. Write 1 AND ENSWINT = 1 Post an interrupt.
6	**DCB12**	Digital Communications Block type B, row 1, position 2. Read 0 No posted interrupt. Read 1 Posted interrupt present. Write 0 AND ENSWINT = 0 Clear posted interrupt if it exists. Write 1 AND ENSWINT = 0 No effect. Write 0 AND ENSWINT = 1 No effect. Write 1 AND ENSWINT = 1 Post an interrupt.
5	**DBB11**	Digital Basic Block type B, row 1, position 1. Read 0 No posted interrupt. Read 1 Posted interrupt present. Write 0 AND ENSWINT = 0 Clear posted interrupt if it exists. Write 1 AND ENSWINT = 0 No effect. Write 0 AND ENSWINT = 1 No effect. Write 1 AND ENSWINT = 1 Post an interrupt.

(continued on next page)

OBSOLETE

39.2.79 INT_CLR1 *(continued)*

4	**DBB10**	Digital Basic Block type B, row 1, position 0. Read 0 No posted interrupt. Read 1 Posted interrupt present. Write 0 AND ENSWINT = 0 Clear posted interrupt if it exists. Write 1 AND ENSWINT = 0 No effect. Write 0 AND ENSWINT = 1 No effect. Write 1 AND ENSWINT = 1 Post an interrupt.
3	**DCB03**	Digital Communications Block type B, row 0, position 3. Read 0 No posted interrupt. Read 1 Posted interrupt present. Write 0 AND ENSWINT = 0 Clear posted interrupt if it exists. Write 1 AND ENSWINT = 0 No effect. Write 0 AND ENSWINT = 1 No effect. Write 1 AND ENSWINT = 1 Post an interrupt.
2	**DCB02**	Digital Communications Block type B, row 0, position 2. Read 0 No posted interrupt. Read 1 Posted interrupt present. Write 0 AND ENSWINT = 0 Clear posted interrupt if it exists. Write 1 AND ENSWINT = 0 No effect. Write 0 AND ENSWINT = 1 No effect. Write 1 AND ENSWINT = 1 Post an interrupt.
1	**DBB01**	Digital Basic Block type B, row 0, position 1. Read 0 No posted interrupt. Read 1 Posted interrupt present. Write 0 AND ENSWINT = 0 Clear posted interrupt if it exists. Write 1 AND ENSWINT = 0 No effect. Write 0 AND ENSWINT = 1 No effect. Write 1 AND ENSWINT = 1 Post an interrupt.
0	**DBB00**	Digital Basic Block type B, row 0, position 0. Read 0 No posted interrupt. Read 1 Posted interrupt present. Write 0 AND ENSWINT = 0 Clear posted interrupt if it exists. Write 1 AND ENSWINT = 0 No effect. Write 0 AND ENSWINT = 1 No effect. Write 1 AND ENSWINT = 1 Post an interrupt.

OBSOLETE

39.2.80 INT_CLR2

Interrupt Clear Register 2

Individual Register Names and Addresses:

INT_CLR2: 0,DCh

	7	6	5	4	3	2	1	0
Access : POR	RW : 0	RW : 0	RW : 0	RW : 0	RW : 0	RW : 0	RW : 0	RW : 0
Bit Name	PWMLP	PWMHP	CMP13	CMP12	CMP11	CMP10	CMP9	CMP8

This register is used to enable the individual interrupt sources' ability to clear posted interrupts for the comparator bank and DPWM blocks.

When bits in this register are read, a '1' will be returned for every bit position that has a corresponding posted interrupt. When bits in this register are written with a '0' and ENSWINT is not set, posted interrupts will be cleared at the corresponding bit positions. If there was not a posted interrupt, there is no effect. When bits in this register are written with a '1' and ENSWINT is set, an interrupt is posted in the interrupt controller. Note that the ENSWINT bit is in the INT_MSK3 register on page 452. For additional information, refer to the "Register Definitions" on page 74 in the Interrupt Controller chapter.

Bit	Name	Description
7	**PWMLP**	Low priority PWM interrupt. Read 0 — No posted interrupt. Read 1 — Posted interrupt present. Write 0 AND ENSWINT = 0 — Clear posted interrupt if it exists. Write 1 AND ENSWINT = 0 — No effect. Write 0 AND ENSWINT = 1 — No effect. Write 1 AND ENSWINT = 1 — Post an interrupt.
6	**PWMHP**	High priority PWM interrupt. Read 0 — No posted interrupt. Read 1 — Posted interrupt present. Write 0 AND ENSWINT = 0 — Clear posted interrupt if it exists. Write 1 AND ENSWINT = 0 — No effect. Write 0 AND ENSWINT = 1 — No effect. Write 1 AND ENSWINT = 1 — Post an interrupt.
5	**CMP13**	Comparator bank comparator 13. Read 0 — No posted interrupt. Read 1 — Posted interrupt present. Write 0 AND ENSWINT = 0 — Clear posted interrupt if it exists. Write 1 AND ENSWINT = 0 — No effect. Write 0 AND ENSWINT = 1 — No effect. Write 1 AND ENSWINT = 1 — Post an interrupt.

(continued on next page)

OBSOLETE

39.2.80 INT_CLR2 *(continued)*

4	**CMP12**	Comparator bank comparator 12.	
		Read 0	No posted interrupt.
		Read 1	Posted interrupt present.
		Write 0 AND ENSWINT = 0	Clear posted interrupt if it exists.
		Write 1 AND ENSWINT = 0	No effect.
		Write 0 AND ENSWINT = 1	No effect.
		Write 1 AND ENSWINT = 1	Post an interrupt.
3	**CMP11**	Comparator bank comparator 11.	
		Read 0	No posted interrupt.
		Read 1	Posted interrupt present.
		Write 0 AND ENSWINT = 0	Clear posted interrupt if it exists.
		Write 1 AND ENSWINT = 0	No effect.
		Write 0 AND ENSWINT = 1	No effect.
		Write 1 AND ENSWINT = 1	Post an interrupt.
2	**CMP10**	Comparator bank comparator 10.	
		Read 0	No posted interrupt.
		Read 1	Posted interrupt present.
		Write 0 AND ENSWINT = 0	Clear posted interrupt if it exists.
		Write 1 AND ENSWINT = 0	No effect.
		Write 0 AND ENSWINT = 1	No effect.
		Write 1 AND ENSWINT = 1	Post an interrupt.
1	**CMP9**	Comparator bank comparator 9.	
		Read 0	No posted interrupt.
		Read 1	Posted interrupt present.
		Write 0 AND ENSWINT = 0	Clear posted interrupt if it exists.
		Write 1 AND ENSWINT = 0	No effect.
		Write 0 AND ENSWINT = 1	No effect.
		Write 1 AND ENSWINT = 1	Post an interrupt.
0	**CMP8**	Comparator bank comparator 8.	
		Read 0	No posted interrupt.
		Read 1	Posted interrupt present.
		Write 0 AND ENSWINT = 0	Clear posted interrupt if it exists.
		Write 1 AND ENSWINT = 0	No effect.
		Write 0 AND ENSWINT = 1	No effect.
		Write 1 AND ENSWINT = 1	Post an interrupt.

OBSOLETE

39.2.81 INT_CLR3

Interrupt Clear Register 3

Individual Register Names and Addresses:

INT_CLR3: 0,DDh

	7	6	5	4	3	2	1	0
Access : POR								RW : 0
Bit Name								I2C

This register is used to enable the I2C interrupt sources' ability to clear posted interrupts.

When bits in this register are read, a '1' will be returned for every bit position that has a corresponding posted interrupt. When bits in this register are written with a '0' and ENSWINT is cleared, any posted interrupt will be cleared. If there was not a posted interrupt, there is no effect. When bits in this register are written with a '1' and ENSWINT is set, an interrupt is posted in the interrupt controller. In the table above, note that reserved bits are grayed table cells and are not described in the bit description section below. Reserved bits should always be written with a value of '0'. For additional information, refer to the "Register Definitions" on page 74 in the Interrupt Controller chapter.

Bit	Name	Description	
0	**I2C**	Read 0	No posted interrupt for I2C.
		Read 1	Posted interrupt present for I2C.
		Write 0 AND ENSWINT = 0	Clear posted interrupt if it exists.
		Write 1 AND ENSWINT = 0	No effect.
		Write 0 AND ENSWINT = 1	No effect.
		Write 1 AND ENSWINT = 1	Post an interrupt for I2C.

OBSOLETE

39.2.82 INT_MSK3

Interrupt Mask Register 3

Individual Register Names and Addresses:

INT_MSK3: 0,DEh

	7	6	5	4	3	2	1	0
Access : POR	RW : 0							RW : 0
Bit Name	ENSWINT							I2C

This register is used to enable the I2C's ability to create pending interrupts and enable software interrupts.

When an interrupt is masked off, the mask bit is '0'. The interrupt will still post in the interrupt controller. Therefore, clearing the mask bit only prevents a posted interrupt from becoming a pending interrupt. In the table above, note that reserved bits are grayed table cells and are not described in the bit description section below. Reserved bits should always be written with a value of '0'. For additional information, refer to the "Register Definitions" on page 74 in the Interrupt Controller chapter.

Bit	Name		Description
7	**ENSWINT**	0	Disable software interrupts.
		1	Enable software interrupts.
0	**I2C**	0	Mask I2C interrupt
		1	Unmask I2C interrupt

OBSOLETE

39.2.83 INT_MSK2

Interrupt Mask Register 2

Individual Register Names and Addresses:

INT_MSK2: 0,DFh

	7	6	5	4	3	2	1	0
Access : POR	RW : 0	RW : 0	RW : 0	RW : 0	RW : 0	RW : 0	RW : 0	RW : 0
Bit Name	PWMLP	PWMHP	CMP13	CMP12	CMP11	CMP10	CMP9	CMP8

This register is used to enable the individual sources' ability to create pending interrupts for the comparator bank and digital modulator blocks.

When an interrupt is masked off in this register, the mask bit is '0'. The interrupt will still post in the interrupt controller. Therefore, clearing the mask bit only prevents a posted interrupt from becoming a pending interrupt. For additional information, refer to the "Register Definitions" on page 74 in the Interrupt Controller chapter.

Bit	Name		Description
7	**PWMLP**	0	Mask PWM block low priority interrupt.
		1	Unmask PWM block low priority interrupt.
6	**PWMHP**	0	Mask PWM block high priority interrupt.
		1	Unmask PWM block high priority interrupt.
5	**CMP13**	0	Mask comparator bank, comparator 13 interrupt.
		1	Unmask comparator bank, comparator 13 interrupt.
4	**CMP12**	0	Mask comparator bank, comparator 12 interrupt.
		1	Unmask comparator bank, comparator 12 interrupt.
3	**CMP11**	0	Mask comparator bank, comparator 11 interrupt.
		1	Unmask comparator bank, comparator 11 interrupt.
2	**CMP10**	0	Mask comparator bank, comparator 10 interrupt.
		1	Unmask comparator bank, comparator 10 interrupt.
1	**CMP9**	0	Mask comparator bank, comparator 9 interrupt.
		1	Unmask comparator bank, comparator 9 interrupt.
0	**CMP8**	0	Mask comparator bank, comparator 8 interrupt.
		1	Unmask comparator bank, comparator 8 interrupt.

OBSOLETE

39.2.84 INT_MSK0

Interrupt Mask Register 0

Individual Register Names and Addresses:

INT_MSK0: 0,E0h

	7	6	5	4	3	2	1	0
Access : POR	RW : 0	RW : 0	RW : 0	RW : 0		RW : 0	RW : 0	RW : 0
Bit Name	VC3	Sleep	GPIO	UVLO		Analog 1	Analog 0	V Monitor

This register is used to enable the individual sources' ability to create pending interrupts.

This register is used to enable the individual sources' ability to create pending interrupts. When an interrupt is masked off, the mask bit is '0'. The interrupt will still post in the interrupt controller. Therefore, clearing the mask bit only prevents a posted interrupt from becoming a pending interrupt. Note that reserved bits are grayed table cells and are not described in the bit description section. Reserved bits should always be written with a value of '0'. For additional information, refer to the "Register Definitions" on page 74 in the Interrupt Controller chapter.

Bit	Name	Description	
7	**VC3**	0	Mask VC3 interrupt.
		1	Unmask VC3 interrupt.
6	**Sleep**	0	Mask sleep interrupt.
		1	Unmask sleep interrupt.
5	**GPIO**	0	Mask GPIO interrupt.
		1	Unmask GPIO interrupt.
4	**UVLO**	0	Mask switching regulator under voltage lockout interrupt.
		1	Unmask switching regulator UVLO interrupt.
2	**Analog 1**	0	Mask analog interrupt, column 1.
		1	Unmask analog interrupt.
1	**Analog 0**	0	Mask analog interrupt, column 0.
		1	Unmask analog interrupt.
0	**V Monitor**	0	Mask voltage monitor interrupt.
		1	Unmask voltage monitor interrupt.

OBSOLETE

39.2.85 INT_MSK1

Interrupt Mask Register 1

Individual Register Names and Addresses:

INT_MSK1: 0,E1h

	7	6	5	4	3	2	1	0
Access : POR	RW : 0	RW : 0	RW : 0	RW : 0	RW : 0	RW : 0	RW : 0	RW : 0
Bit Name	DCB13	DCB12	DBB11	DBB10	DCB03	DCB02	DBB01	DBB00

This register is used to enable the individual sources' ability to create pending interrupts for digital blocks.

When an interrupt is masked off, the mask bit is '0'. The interrupt will still post in the interrupt controller. Therefore, clearing the mask bit only prevents a posted interrupt from becoming a pending interrupt. For additional information, refer to the "Register Definitions" on page 74 in the Interrupt Controller chapter.

Bit	Name		Description
7	**DCB13**	0	Mask Digital Communication Block, row 1, position 3 interrupt.
		1	Unmask Digital Communication Block, row 1, position 3 interrupt.
6	**DCB12**	0	Mask Digital Communication Block, row 1, position 2 interrupt.
		1	Unmask Digital Communication Block, row 1, position 2 interrupt.
5	**DBB11**	0	Mask Digital Basic Block, row 1, position 1interrupt.
		1	Unmask Digital Basic Block, row 1, position 1 interrupt.
4	**DBB10**	0	Mask Digital Basic Block, row 1, position 0 interrupt.
		1	Unmask Digital Basic Block, row 1, position 0 interrupt.
3	**DCB03**	0	Mask Digital Communication Block, row 0, position 3 off.
		1	Unmask Digital Communication Block, row 0, position 3.
2	**DCB02**	0	Mask Digital Communication Block, row 0, position 2 off.
		1	Unmask Digital Communication Block, row 0, position 2.
1	**DBB01**	0	Mask Digital Basic Block, row 0, position 1 off.
		1	Unmask Digital Basic Block, row 0, position 1.
0	**DBB00**	0	Mask Digital Basic Block, row 0, position 0 off.
		1	Unmask Digital Basic Block, row 0, position 0.

OBSOLETE

39.2.86 INT_VC

Interrupt Vector Clear Register

Individual Register Names and Addresses:

INT_VC: 0,E2h

	7	6	5	4	3	2	1	0
Access : POR	RC : 00							
Bit Name	Pending Interrupt[7:0]							

This register returns the next pending interrupt and clears all pending interrupts when written.

For additional information, refer to the “Register Definitions” on page 74 in the Interrupt Controller chapter.

Bit	Name	Description	
7:0	**Pending Interrupt[7:0]**	Read	Returns vector for highest priority pending interrupt.
		Write	Clears all pending and posted interrupts.

OBSOLETE

39.2.87 RES_WDT

Reset Watchdog Timer Register

Individual Register Names and Addresses:

RES_WDT: 0,E3h

	7	6	5	4	3	2	1	0
Access : POR	W : 00							
Bit Name	WDSL_Clear[7:0]							

This register is used to clear the watchdog timer and clear both the watchdog timer and the sleep timer.

For additional information, refer to the "Register Definitions" on page 95 in the Sleep and Watchdog chapter.

Bit	Name	Description
7:0	**WDSL_Clear[7:0]**	Any write clears the watchdog timer. A write of 38h clears both the watchdog and sleep timers.

OBSOLETE

39.2.88 DEC_DH

Decimator Data High Register

Individual Register Names and Addresses:

DEC_DH: 0,E4h

	7	6	5	4	3	2	1	0
Access : POR	RC : XX							
Bit Name	Data High Byte[7:0]							

This register is a dual purpose register and is used to read the high byte of the decimator's output or clear the decimator.

When a hardware reset occurs, the internal state of the decimator is reset, but the output data registers (DEC_DH and DEC_DL) are not. For additional information, refer to the "Register Definitions" on page 233 in the Decimator chapter.

Bit	Name	Description	
7:0	**Data High Byte[7:0]**	Read	Returns the high byte of the decimator.
		Write	Clears the 16-bit accumulator values. Either the DEC_DH or DEC_DL register may be written to clear the accumulators (that is, it is not necessary to write both).

OBSOLETE

39.2.89 DEC_DL

Decimator Data Low Register

Individual Register Names and Addresses:

DEC_DL: 0,E5h

	7	6	5	4	3	2	1	0
Access : POR	RC : XX							
Bit Name	Data Low Byte[7:0]							

This register is a dual purpose register and is used to read the low byte of the decimator's output or clear the decimator.

When a hardware reset occurs, the internal state of the decimator is reset, but the output data registers (DEC_DH and DEC_DL) are not. For additional information, refer to the "Register Definitions" on page 233 in the Decimator chapter.

Bit	Name	Description	
7:0	**Data Low Byte[7:0]**	Read	Returns the low byte of the decimator.
		Write	Clears the 16-bit accumulator values. Either the DEC_DH or DEC_DL register may be written to clear the accumulators (that is, it is not necessary to write both).

OBSOLETE

39.2.90 DEC_CR0

Decimator Control Register 0

Individual Register Names and Addresses:

DEC_CR0: 0,E6h

	7	6	5	4	3	2	1	0
Access : POR			RW : 0		RW : 0	RW : 0		RW : 0
Bit Name			IGEN[1:0]		ICLKS0	DCOL[1:0]		DCLKS0

This register contains control bits to access hardware support for ADC operation.

In the table above, note that reserved bits are grayed table cells and are not described in the bit description section. Reserved bits should always be written with a value of '0'. For additional information, refer to the "Register Definitions" on page 233 in the Decimator chapter.

Bits	Name	Description
7:4	**IGEN[3:0]**	Incremental/SSADC Gate Enable. Selects on a column basis which comparator outputs will be gated with the SSADC selected PWM source. 1h Analog Column 0 2h Analog Column 1 4h Reserved. 8h Reserved.
3	**ICLKS0**	Incremental/SSADC Gate Source. Along with bits ICLKS3, ICLKS2, and ICLKS1 in the DEC_CR1 register, this bit selects any one of the digital blocks in your device.

(continued on next page)

OBSOLETE

39.2.90 DEC_CR0 *(continued)*

3	*(cont.)*	**ICLKS3, ICLKS2, ICLKS1 (see the DEC_CR1 register), ICLKS0** 0000b Digital block 02 0001b Digital block 12 0010b Digital block 01 0011b Digital block 11 0100b Digital block 00 0101b Digital block 10 0110b Digital block 03 0111b Digital block 13 1000b Reserved 1001b Reserved 1010b Reserved 1011b Reserved 1100b Reserved 1101b Reserved 1110b Reserved 1111b Reserved
2:1	**DCOL[1:0]**	Decimator Column Source. Selects the analog comparator column as a data source for the decimator. 00b Analog Column 0 01b Analog Column 1 10b Reserved 11b Reserved
0	**DCLKS0**	Decimator Latch Select. Along with bits DCLKS3, DCLKS2, and DCLKS1 in the DEC_CR1 register, this bit selects any one of the digital blocks in your device. **DCLKS3, DCLKS2, DCLKS1 (see the DEC_CR1 register), DCLKS0** 0000b Digital block 02 0001b Digital block 12 0010b Digital block 01 0011b Digital block 11 0100b Digital block 00 0101b Digital block 10 0110b Digital block 03 0111b Digital block 13 1000b Reserved 1001b Reserved 1010b Reserved 1011b Reserved 1100b Reserved 1101b Reserved 1110b Reserved 1111b Reserved

OBSOLETE

39.2.91 DEC_CR1

Decimator Control Register 1

Individual Register Names and Addresses:

DEC_CR1: 0,E7h

	7	6	5	4	3	2	1	0
Access : POR		RW : 0	RW : 0	RW : 0	RW : 0	RW : 0	RW : 0	RW : 0
Bit Name		IDEC	ICLKS3	ICLKS2	ICLKS1	DCLKS3	DCLKS2	DCLKS1

This register is used to configure signals for ADC operation/decimator and is reserved in PowerPSoC devices with a type 2 decimator. Note that reserved bits are grayed table cells and are not described in the bit description section. Reserved bits should always be written with a value of '0'. For additional information, refer to the "Register Definitions" on page 233 in the Decimator chapter.

Bits	Name	Description
6	**IDEC**	Invert the Digital Block Latch Control (selected by DCLKS3, DCLKS2, DCLKS1, and DCLKS0). 0 Non-inverted 1 Inverted
5:3	**ICLKSx**	Incremental/SSADC Gate Source. Along with ICLKS0 in DEC_CR0, selects any one of the digital blocks in your device.

(continued on next page)

OBSOLETE

39.2.91 DEC_CR1 *(continued)*

5:3 **ICLKSx** *(cont.)*

ICLKS3, ICLKS2, ICLKS1, ICLKS0 (see the DEC_CR0 register)

0000b Digital block 02
0001b Digital block 12
0010b Digital block 01
0011b Digital block 11
0100b Digital block 00
0101b Digital block 10
0110b Digital block 03
0111b Digital block 13
1000b Reserved
1001b Reserved
1010b Reserved
1011b Reserved
1100b Reserved
1101b Reserved
1110b Reserved
1111b Reserved

2:0 **DCLKSx**

Decimator Latch Select. Along with DCLKS0 in DEC_CR0, selects any one of the digital blocks in your device.

DCLKS3, DCLKS2, DCLKS1, DCLKS0 (see the DEC_CR0 register)

0000b Digital block 02
0001b Digital block 12
0010b Digital block 01
0011b Digital block 11
0100b Digital block 00
0101b Digital block 10
0110b Digital block 03
0111b Digital block 13
1000b Reserved
1001b Reserved
1010b Reserved
1011b Reserved
1100b Reserved
1101b Reserved
1110b Reserved
1111b Reserved

OBSOLETE

39.2.92 CPU_F

M8C Flag Register

Individual Register Names and Addresses:

CPU_F: x,F7h

	7	6	5	4	3	2	1	0
Access : POR	RL : 0			RL : 0		RL : 0	RL : 0	RL : 0
Bit Name	PgMode[1:0]			XIO		Carry	Zero	GIE

This register provides read access to the M8C flags.

The AND f, expr; OR f, expr; and XOR f, expr flag instructions can be used to modify this register. In the table above, note that reserved bits are grayed table cells and are not described in the bit description section below. Reserved bits should always be written with a value of '0'. For additional information, refer to the "Register Definitions" on page 52 in the M8C chapter and the "Register Definitions" on page 74 in the Interrupt Controller chapter.

Bit	Name	Description
7:6	**PgMode[1:0]**	00b Direct Address mode and Indexed Address mode operands are referred to RAM Page 0, regardless of the values of CUR_PP and IDX_PP. Note that this condition prevails on entry to an Interrupt Service Routine when the CPU_F register is cleared. 01b Direct Address mode instructions are referred to page 0. Indexed Address mode instructions are referred to the RAM page specified by the stack page pointer, STK_PP. 10b Direct Address mode instructions are referred to the RAM page specified by the current page pointer, CUR_PP. Indexed Address mode instructions are referred to the RAM page specified by the index page pointer, IDX_PP. 11b Direct Address mode instructions are referred to the RAM page specified by the current page pointer, CUR_PP. Indexed Address mode instructions are referred to the RAM page specified by the stack page pointer, STK_PP.
4	**XIO**	0 Normal register address space 1 Extended register address space. Primarily used for configuration.
2	**Carry**	Set by the M8C CPU Core to indicate whether there has been a carry in the previous logical/arithmetic operation. 0 No carry 1 Carry
1	**Zero**	Set by the M8C CPU Core to indicate whether there has been a zero result in the previous logical/arithmetic operation. 0 Not equal to zero 1 Equal to zero
0	**GIE**	0 M8C will not process any interrupts. 1 Interrupt processing enabled.

OBSOLETE

39.2.93 DAC_D

Analog Mux DAC Data Register

Individual Register Names and Addresses:

MXDACD : 0,FDh

	7	6	5	4	3	2	1	0
Access : POR	RW : 00							
Bit Name	DACDATA[7:0]							

This register specifies the 8-bit multiplying factor that determines the output DAC current.

For additional information, refer to the "Register Definitions" on page 268 in the I/O Analog Multiplexer chapter.

Bits	Name	Description
7:0	**DACDATA[7:0]**	This 8-bit value selects the number of current units that combine to form the DAC current. This current then drives the analog mux bus when DAC mode is enabled in the MXDACCR register. For example, a setting of 80h means that the charging current will be 128 current units. The current unit size depends on the range setting in the MXDACCR register.

OBSOLETE

39.2.94 CPU_SCR1

System Status and Control Register 1

Individual Register Names and Addresses:

CPU_SCR1: x,FEh

	7	6	5	4	3	2	1	0
Access : POR	R : 0							RW : 0
Bit Name	IRESS							IRAMDIS

This register is used to convey the status and control of events related to internal resets and watchdog reset.

In the table above, note that reserved bits are grayed table cells and are not described in the bit description section. Reserved bits should always be written with a value of '0'. For additional information, refer to the "Register Definitions" on page 59 in the SROM chapter.

Bit	Name	Description
7	**IRESS**	This bit is read only. 0 Boot phase only executed once. 1 Boot phase occurred multiple times.
0	**IRAMDIS**	0 SRAM is initialized to 00h after POR, XRES, and WDR. 1 Address 03h - D7h of SRAM Page 0 are not modified by WDR.

OBSOLETE

39.2.95 CPU_SCR0

System Status and Control Register 0

Individual Register Names and Addresses:

CPU_SCR0: x,FFh

	7	6	5	4	3	2	1	0
Access : POR	R : 0		RC : 0	RC : 1	RW : 0			RW : 0
Bit Name	GIES		WDRS	PORS	Sleep			STOP

This register is used to convey the status and control of events for various functions of a PowerPSoC device.

In the table above, note that reserved bits are grayed table cells and are not described in the bit description section. Reserved bits should always be written with a value of '0'. For additional information, refer to the "Register Definitions" on page 95 in the Sleep and Watchdog chapter.

Bit	Name	Description
7	**GIES**	Global interrupt enable status. It is recommended that the user read the Global Interrupt Enable Flag bit from the CPU_F register on page 464. This bit is Read Only for GIES. Its use is discouraged, as the Flag register is now readable at address x,F7h (read only).
5	**WDRS**	Watchdog Reset Status. This bit may not be set by user code; however, it may be cleared by writing it with a '0'. 0 No Watchdog Reset has occurred. 1 Watchdog Reset has occurred.
4	**PORS**	Power On Reset Status. This bit may not be set by user code; however, it may be cleared by writing it with a '0'. 0 Power On Reset has not occurred and watchdog timer is enabled. 1 Will be set after external reset or Power On Reset.
3	**Sleep**	Set by the user to enable the CPU sleep state. CPU will remain in Sleep mode until any interrupt is pending. 0 Normal operation 1 Sleep
0	**STOP**	0 M8C is free to execute code. 1 M8C is halted. Can only be cleared by POR, XRES, or WDR.

OBSOLETE

39.3 Bank 1 Registers

The following registers are all in bank 1 and are listed in address order. Registers that are in both Bank 0 and Bank 1 are listed in address order in the section titled “Bank 0 Registers” on page 363.

39.3.1 FN0DM0/PRTxDM0

Port Drive Mode Bit Register 0

Individual Register Names and Addresses:

PRT0DM0 : 1,00h PRT1DM0 : 1,04h PRT2DM0 : 1,08h FN0DM0 : 1,0Ch

	7	6	5	4	3	2	1	0
Access : POR	RW : 00							
Bit Name	Drive Mode 0[7:0]							

This register is one of three registers whose combined value determines the unique drive mode of each bit in a GPIO port.

In register FN0DM0/PRTxDM0 there are eight possible drive modes for each port pin. Three mode bits are required to select one of these modes, and these three bits are spread into three different registers (FN0DM0/PRTxDM0, “FN0DM1/PRTxDM1” on page 469, and “FN0DM2/PRTxDM2” on page 366). The bit position of the effected port pin (for example, Pin[2] in Port 0) is the same as the bit position of each of the three Drive Mode register bits that control the Drive mode for that pin (for example, Bit[2] in FN0DM0/PRT0DM0, bit[2] in FN0DM1/PRT0DM1, and bit[2] in FN0DM2/PRT0DM2). The three bits from the three registers are treated as a group. These are referred to as DM2, DM1, and DM0, or together as DM[2:0].

All Drive mode bits are shown in the sub-table below ([21**0**] refers to the combination (in order) of bits in a given bit position); however, this register only controls the ***least significant bit (LSb)*** of the Drive mode.

Any bit that is not available for a port, this register will return the last data bus value when read and should be masked off prior to using this information. For additional information, refer to the “Register Definitions” on page 83 in the GPIO chapter.

Bit	Name	Description
7:0	**Drive Mode 0[7:0]**	Bit 0 of the Drive mode, for each of 8-port pins, for a GPIO port.

[21*0*]	**Pin Output High**	**Pin Output Low**	**Notes**
00**0**b	Strong	Resistive	
00**1**b	Strong	Strong	
01**0**b	High Z	High Z	Digital input enabled.
01**1**b	Resistive	Strong	
10**0**b	Slow + strong	High Z	
10**1**b	Slow + strong	Slow + strong	
11**0**b	High Z	High Z	Reset state. Digital input disabled for zero power.
11**1**b	High Z	Slow + strong	I2C Compatible mode.

Note A bold digit, in the table above, signifies that the digit is used in this register.

OBSOLETE

39.3.2 FN0DM1/PRTxDM1

Port Drive Mode Bit Register 1

Individual Register Names and Addresses:

PRT0DM1 : 1,01h PRT1DM1 : 1,05h PRT2DM1 : 1,09h FN0DM1 : 1,0Dh

	7	6	5	4	3	2	1	0
Access : POR	RW : FF							
Bit Name	Drive Mode 1[7:0]							

This register is one of three registers whose combined value determines the unique Drive mode of each bit in a GPIO port.

In register FN0DM1/PRTxDM1 there are eight possible drive modes for each port pin. Three mode bits are required to select one of these modes, and these three bits are spread into three different registers ("FN0DM0/PRTxDM0" on page 468, FN0DM1/PRTxDM1, and "FN0DM2/PRTxDM2" on page 366). The bit position of the effected port pin (for example, Pin[2] in Port 0) is the same as the bit position of each of the three Drive Mode register bits that control the Drive mode for that pin (for example, Bit[2] in FN0DM0/PRT0DM0, bit[2] in FN0DM1/PRT0DM1, and bit[2] in FN0DM2/PRT0DM2). The three bits from the three registers are treated as a group. These are referred to as DM2, DM1, and DM0, or together as DM[2:0].

All Drive mode bits are shown in the sub-table below ([2**1**0] refers to the combination (in order) of bits in a given bit position); however, this register only controls the middle bit of the Drive mode.

Any bit that is not available for a port, this register will return the last data bus value when read and should be masked off prior to using this information. For additional information, refer to the "Register Definitions" on page 83 in the GPIO chapter.

Bit	Name	Description
7:0	**Drive Mode 1[7:0]**	Bit 1 of the Drive mode, for each of 8-port pins, for a GPIO port.

[2**1**0]	Pin Output High	Pin Output Low	Notes
0**0**0b	Strong	Resistive	
0**0**1b	Strong	Strong	
0**1**0b	High Z	High Z	Digital input enabled.
0**1**1b	Resistive	Strong	
1**0**0b	Slow + strong	High Z	
1**0**1b	Slow + strong	Slow + strong	
1**1**0b	High Z	High Z	Reset state. Digital input disabled for zero power.
1**1**1b	High Z	Slow + strong	I2C Compatible mode.

Note A bold digit, in the table above, signifies that the digit is used in this register.

OBSOLETE

39.3.3 FN0IC0/PRTxIC0

Port Interrupt Control Register 0

Individual Register Names and Addresses:

PRT0IC0 : 1,02h PRT1IC0 : 1,06h PRT2IC0 : 1,0Ah FN0IC0 : 1,0Eh

	7	6	5	4	3	2	1	0
Access : POR	RW : 00							
Bit Name	Interrupt Control 0[7:0]							

This register is one of two registers whose combined value determine the unique Interrupt mode of each bit in a GPIO port.

In register FN0IC0/PRTxIC0 there are four possible interrupt modes for each port pin. Two mode bits are required to select one of these modes and these two bits are spread into two different registers (FN0IC0/PRTxIC0 and “FN0IC1/PRTxIC1” on page 471). The bit position of the effected port pin (for example, Pin[2] in Port 0) is the same as the bit position of each of the interrupt control register bits that control the Interrupt mode for that pin (for example, Bit[2] in FN0IC0/PRT0IC0 and bit[2] in FN0IC1/PRT0IC1). The two bits from the two registers are treated as a group. In the sub-table below, “[**0**]” refers to the combination (in order) of bits in a given position, one bit from FN0IC1/PRTxIC1 and one bit from FN0IC0/PRTxIC0.

Any bit that is not available for a port, this register will return the last data bus value when read and should be masked off prior to using this information. For additional information, refer to the “Register Definitions” on page 83 in the GPIO chapter.

Bit	Name	Description	
7:0	**Interrupt Control 0[7:0]**	[1**0**]	**Interrupt Type**
		0**0**b	Disabled
		0**1**b	Low
		1**0**b	High
		1**1**b	Change from last read

Note A bold digit, in the table above, signifies that the digit is used in this register.

OBSOLETE

39.3.4 FN0IC1/PRTxIC1

Port Interrupt Control Register 1

Individual Register Names and Addresses:

PRT0IC1 : 1,03h PRT1IC1 : 1,07h PRT2IC1 : 1,0Bh FN0IC1 : 1,0Fh

	7	6	5	4	3	2	1	0
Access : POR	RW : 00							
Bit Name	Interrupt Control 1[7:0]							

This register is one of two registers whose combined value determine the unique Interrupt mode of each bit in a GPIO port.

In register FN0IC1/PRTxIC1 there are four possible interrupt modes for each port pin. Two mode bits are required to select one of these modes and these two bits are spread into two different registers ("FN0IC0/PRTxIC0" on page 470 and FN0IC1/PRTxIC1). The bit position of the effected port pin (for example, Pin[2] in Port 0) is the same as the bit position of each of the interrupt control register bits that control the Interrupt mode for that pin (for example, Bit[2] in FN0IC0/PRT0IC0 and bit[2] in FN0IC1/PRT0IC1). The two bits from the two registers are treated as a group. In the sub-table below, "[**1**]" refers to the combination (in order) of bits in a given position, one bit from FN0IC1/PRTxIC1 and one bit from FN0IC0/PRTxIC0.

Any bit that is not available for a port, this register will return the last data bus value when read and should be masked off prior to using this information. For additional information, refer to the "Register Definitions" on page 83 in the GPIO chapter.

Bit	Name	Description	
7:0	**Interrupt Control 1[7:0]**	[**1**0]	**Interrupt Type**
		00b	Disabled
		01b	Low
		10b	High
	'	**1**1b	Change from last read
		Note A bold digit, in the table above, signifies that the digit is used in this register.	

PRELIMINARY

39.3.5 DxBxxFN

Digital Basic/Communications Type B Block Function Register

Individual Register Names and Addresses:

DBB00FN : 1,20h	DBB01FN : 1,24h	DCB02FN : 1,28h	DCB03FN : 1,2Ch
DBB10FN : 1,30h	DBB11FN : 1,34h	DCB12FN : 1,38h	DCB13FN : 1,3Ch

	7	6	5	4	3	2	1	0
Access : POR	RW : 0	RW : 0	RW : 0	RW : 0		RW : 0		
Bit Name	Data Invert	BCEN	End Single	Mode[1:0]		Function[2:0]		

This register contains the primary Mode and Function bits that determine the function of the block.

Before changing any of the configuration registers (DxBxxFN, DxBxxIN, and DxBxxOU), disable the corresponding digital block by setting bit 0 in the CR0 or DxBxxCR0 register to '0'. The values in the DxBxxFN register should not be changed while the block is enabled. After all configuration changes are made, enable the block by setting bit 0 in the DxBxxCR0 register to '1'.

The naming convention for this register is as follows. The first 'x' in the digital register's name represents either "B" for basic or "C" for communication. For rows of digital PSoC blocks and their registers, the second 'x' set represents <Prefix>mn<Suffix>, where m=row index, n=column index. Therefore, DCB12FN is a digital communication register for a digital PSoC block in row 1 column 2. For additional information, refer to the "Register Definitions" on page 133 in the Digital Blocks chapter.

Bit	Name	Description
7	**Data Invert**	0 Data input is non-inverted. 1 Data input is inverted.
6	**BCEN**	Enable Primary Function Output to drive the broadcast net. 0 Disable 1 Enable
5	**End Single**	0 Block is not the end of a chained function or the function is not chainable. 1 Block is the end of a chained function or a standalone block in a chainable function.
4:3	**Mode[1:0]**	These bits are function dependent and are described by function as follows.
	Timer or Counter:	Mode[0] signifies the interrupt type. 0 Interrupt on Terminal Count 1 Interrupt on Compare True Mode[1] signifies the compare type. 0 Compare on Less Than or Equal 1 Compare on Less Than
	CRCPRS:	Mode[1:0] are encoded as the Compare Type. 00b Compare on Equal 01b Compare on Less Than or Equal 10b Reserved 11b Compare on Less Than

(continued on next page)

OBSOLETE

39.3.5 DxBxxFN *(continued)*

4:3 *(cont.)*	Dead Band:	Mode[1:0] are encoded as the Kill Type. 00b Synchronous Restart KILL mode 01b Disable KILL mode 10b Asynchronous KILL mode 11b Reserved
	UART:	Mode[0] signifies the Direction. 0 Receiver 1 Transmitter Mode[1] signifies the Interrupt Type. 0 Interrupt on TX Reg Empty 1 Interrupt on TX Complete
	SPI:	Mode[0] signifies the Type. 0 Master 1 Slave Mode[1] signifies the Interrupt Type. 0 Interrupt on TX Reg Empty 1 Interrupt on SPI Complete
2:0	**Function[2:0]**	000b Timer (chainable) 001b Counter (chainable) 010b CRCPRS (chainable) 011b Reserved 100b Dead Band 101b UART (DCBxx blocks only) 110b SPI (DCBxx blocks only) 111b Reserved

OBSOLETE

39.3.6 DxBxxIN

Digital Basic/Communications Type B Block Input Register

Individual Register Names and Addresses:

DBB00IN : 1,21h	DBB01IN : 1,25h	DCB02IN : 1,29h	DCB03IN : 1,2Dh
DBB10IN : 1,31h	DBB11IN : 1,35h	DCB12IN : 1,39h	DCB13IN : 1,3Dh

	7	6	5	4	3	2	1	0
Access : POR	RW : 0				RW : 0			
Bit Name	Data Input[3:0]				Clock Input[3:0]			

These registers are used to select the data and clock inputs.

Before changing any of the configuration registers (DxBxxFN, DxBxxIN, and DxBxxOU), disable the corresponding digital block by setting bit 0 in the CR0 or DxBxxCR0 register to '0'. The values in this register should not be changed while the block is enabled. After all configuration changes are made, enable the block by setting bit 0 in the CR0 register to '1'.

The naming convention for this register is as follows. The first 'x' in the digital register's name represents either "B" for basic or "C" for communication. For rows of digital PSoC blocks and their registers, the second 'x' set represents <Prefix>mn<Suffix>, where m=row index, n=column index. Therefore, DCB12IN is a digital communication register for a digital PSoC block in row 1 column 2. Depending on the digital row characteristics of your PowerPSoC device, some addresses may not be available. For additional information, refer to the "Register Definitions" on page 133 in the Digital Blocks chapter.

Bit	Name	Description	
7:4	**Data Input[3:0]**	0h	Low (0)
		1h	High (1)
		2h	Row broadcast net
		3h	Chain function to previous block (low (0) in block DBB00IN)
		4h	Analog column comparator 0
		5h	Analog column comparator 1
		6h	Analog column comparator 2
		7h	Analog column comparator 3
		8h	Row output 0
		9h	Row output 1
		Ah	Row output 2
		Bh	Row output 3
		Ch	Row input 0
		Dh	Row input 1
		Eh	Row input 2
		Fh	Row input 3

(continued on next page)

OBSOLETE

39.3.6 DxBxxIN *(continued)*

3:0	**Clock Input[3:0]**	0h	Clock disabled (low)
		1h	VC3
		2h	Row broadcast net
		3h	Previous block primary output (low for DBB00)
		4h	SYSCLKX2
		5h	VC1
		6h	VC2
		7h	CLK32K
		8h	Row output 0
		9h	Row output 1
		Ah	Row output 2
		Bh	Row output 3
		Ch	Row input 0
		Dh	Row input 1
		Eh	Row input 2
		Fh	Row input 3

OBSOLETE

39.3.7 DxBxxOU

Digital Basic/Communications Type B Block Output Register

Individual Register Names and Addresses:

DBB00OU : 1,22h
DBB10OU : 1,32h
DBB01OU : 1,26h
DBB11OU : 1,36h
DCB02OU : 1,2Ah
DCB12OU : 1,3Ah
DCB03OU : 1,2Eh
DCB13OU : 1,3Eh

	7	6	5	4	3	2	1	0
Access : POR	RW : 0		RW : 0	RW : 0		RW : 0	RW : 0	
Bit Name	AUXCLK		AUXEN	AUX IO Select[1:0]		OUTEN	Output Select[1:0]	

This register is used to control the connection of digital block outputs to the available row interconnect and control clock resynchronization.

Before changing any of the configuration registers (DxBxxFN, DxBxxIN, and DxBxxOU), disable the corresponding digital block by setting bit 0 in the CR0 or DxBxxCR0 register to '0'. The values in this register should not be changed while the block is enabled. After all configuration changes are made, enable the block by setting bit 0 in the DxBxxCR0 register to '1'.

The naming convention for this register is as follows. The first 'x' in the digital register's name represents either "B" for basic or "C" for communication. For rows of digital PSoC blocks and their registers, the second 'x' set represents <Prefix>mn<Suffix>, where m=row index, n=column index. Therefore, DBB12OU is a digital basic register for a digital PSoC block in row 1 column 2. For additional information, refer to the "Register Definitions" on page 133 in the Digital Blocks chapter.

Bit	Name	Description
7:6	**AUXCLK**	00b No sync 16-to-1 clock mux output 01b Synchronize Output of 16-to-1 clock mux to SYSCLK 10b Synchronize Output of 16-to-1 clock mux to SYSCLKX2 11b SYSCLK Directly connect SYSCLK to block clock input
5	**AUXEN**	Auxiliary I/O Enable (function dependent) All Functions except SPI Slave: Enable Auxiliary Output Driver 0 Disabled 1 Enabled SPI Slave: Input Source for SS_ 0 Row Input [3:0], as selected by the AUX I/O Select bits 1 Force SS_ Active
4:3	**AUX I/O Select[1:0]**	Auxiliary I/O Select Function Output (function dependent) All Functions except SPI Slave: Row Output Select 00b Row Output 0 01b Row Output 1 10b Row Output 2 11b Row Output 3 SPI Slave Source for SS_ Input if AUXEN =0. 00b Row Input 0 01b Row Input 1 10b Row Input 2 11b Row Input 3

(continued on next page)

OBSOLETE

39.3.7 DxBxxOU *(continued)*

4:3 *(cont.)*	**AUX I/O Select[1:0]**	SPI Slave Source for SS_ Input if AUXEN =1. 00b Force SS_ Active 01b Reserved 10b Reserved 11b Reserved
2	**OUTEN**	Enable Primary Function Output Driver 0 Disabled 1 Enabled
1:0	**Output Select[1:0]**	Row Output Select for Primary Function Output 00b Row Output 0 01b Row Output 1 10b Row Output 2 11b Row Output 3

OBSOLETE

39.3.8 CSAx_CR

Current Sense Amplifier Control Register

Individual Register Names and Addresses:

CSA0_CR : 1,40h CSA1_CR : 1,44h CSA2_CR : 1,48h CSA3_CR : 1,4Ch

	7	6	5	4	3	2	1	0
Access : POR			RW : 0					RW : 0
Bit Name			BW[1:0]					ENABLE

This register contains the control bit for enabling the CSA, gain adjustment, and configuration. In the table above, note that reserved bits are grayed table cells and are not described in the bit description section below. Reserved bits should always be written with a value of '0'.

Note CSA3_CR is not applicable in CY8CLED01D01 (1 channel PowerPSoC), CY8CLED02D01 (2 channel PowerPSoC) and CY8CLED03D/G0x (3 channel PowerPSoC) devices.

CSA2_CR is not applicable in CY8CLED01D01 (1 channel PowerPSoC) and CY8CLED02D01 (2 channel PowerPSoC) devices.

CSA1_CR is not applicable in the CY8CLED01D01 (1 channel PowerPSoC) device.

Bit	Name	Description
5:4	**BW[1:0]**	These bits are bandwidth configuration for Stage1. 00 Highest, no capacitance added to Stage1 output (default). 01 Medium high. 10 Medium low. 11 Lowest, most capacitance added. The BW bits provide bandwidth adjustment capability, allowing trade offs in bandwidth, time delay, and PSRR. BW controls the capacitance load at the output of Stage1. Because it is associated with the output of Stage1, it affects both configuration modes (CONFIG = '0', '1').
3		Reserved.
2:1		Reserved.
0	**ENABLE**	0 Disable the current sense amplifier 1 Enable the current sense amplifier

OBSOLETE

39.3.9 CLK_CR0

Analog Column Clock Control Register 0

Individual Register Names and Addresses:

CLK_CR0: 1,60h

	7	6	5	4	3	2	1	0
Access : POR					RW : 0		RW : 0	
Bit Name					AColumn1[1:0]		AColumn0[1:0]	

This register is used to select the clock source for an individual analog column.

Each column has two bits that select the column clock input source. The resulting column clock frequency is the selected input clock frequency. Use the register tables above, in addition to the detailed register bit descriptions below, to determine which bits are reserved. Note that reserved bits are grayed table cells and are not described in the bit description section. Reserved bits should always be written with a value of '0'. For additional information, refer to the "Register Definitions" on page 170 in the Analog Interface chapter.

Bits	Name	Description
3:2	**AColumn1[1:0]**	Clock selection for column 1. 00b Variable Clock 1 (VC1) 01b Variable Clock 2 (VC2) 10b Analog Clock 0 (ACLK0) 11b Analog Clock 1 (ACLK1)
1:0	**AColumn0[1:0]**	Clock selection for column 0. 00b Variable Clock 1 (VC1) 01b Variable Clock 2 (VC2) 10b Analog Clock 0 (ACLK0) 11b Analog Clock 1 (ACLK1)

OBSOLETE

39.3.10 CLK_CR1

Analog Clock Source Control Register 1

Individual Register Names and Addresses:

CLK_CR1: 1,61h

	7	6	5	4	3	2	1	0
Access : POR		RW : 0	RW : 0			RW : 0		
Bit Name		SHDIS	ACLK1[2:0]			ACLK0[2:0]		

This register is used to select the clock source for an individual analog column.

There are two ranges of Digital PSoC blocks shown. The range is set by bits ACLK0R and ACLK1R in register CLK_CR2. In the table above, note that reserved bits are grayed table cells and are not described in the bit description section below. Reserved bits should always be written with a value of '0'. For additional information, refer to the "Register Definitions" on page 170 in the Analog Interface chapter.

Bits	Name	Description
6	**SHDIS**	Sample and hold disable. 0 Enabled 1 Disabled
5:3	**ACLK1[2:0]**	Select the clocking source for Analog Clock 1. 000b Digital Basic Block 00 001b Digital Basic Block 01 010b Digital Communication Block 02 011b Digital Communication Block 03 100b Digital Basic Block 10 101b Digital Basic Block 11 110b Digital Communication Block 12 111b Digital Communication Block 13
2:0	**ACLK0[2:0]**	Select the clocking source for Analog Clock 0. 000b Digital Basic Block 00 001b Digital Basic Block 01 010b Digital Communication Block 02 011b Digital Communication Block 03 100b Digital Basic Block 10 101b Digital Basic Block 11 110b Digital Communication Block 12 111b Digital Communication Block 13

OBSOLETE

39.3.11 ABF_CR0

Analog Output Buffer Control Register 0

Individual Register Names and Addresses:

ABF_CR0: 1,62h

	7	6	5	4	3	2	1	0
Access : POR	RW : 0		RW : 0		RW : 0		RW : 0	RW : 0
Bit Name	ACol1Mux		ABUF1EN		ABUF0EN		Bypass	PWR

This register controls analog input muxes from Port 0.

In the tables above, note that reserved bits are grayed table cells and are not described in the bit description section below. Reserved bits should always be written with a value of '0'. For additional information, refer to the "Register Definitions" on page 88 in the Analog Output Drivers chapter or the "Register Definitions" on page 187 in the Analog Input Configuration chapter.

Bits	Name	Description
7	**ACol1Mux**	0 Set column 1 input to column 1 input mux output. (1 Column: selects among P0[6,4,2,0]) 1 Set column 1 input to column 0 input mux output. (1 Column: selects among P0[7,5,3,1])
5	**ABUF1EN**	Enables the analog output buffer for Analog Column 1 (Pin P0[5]). 0 Disable analog output buffer. 1 Enable analog output buffer.
3	**ABUF0EN**	Enables the analog output buffer for Analog Column 0 (Pin P0[3]). (1 Column: AGND) 0 Disable analog output buffer. 1 Enable analog output buffer.

(continued on next page)

OBSOLETE

39.3.11 ABF_CR0 *(continued)*

1	**Bypass**	Connects the positive input of the amplifier(s) directly to the output(s). Amplifiers must be disabled when in Bypass mode. 0 Disable 1 Enable
0	**PWR**	Determines power level of all output buffers. 0 Low output power 1 High output power

OBSOLETE

39.3.12 AMD_CR0

Analog Modulation Control Register 0

Individual Register Names and Addresses:

AMD_CR0: 1,63h

	7	6	5	4	3	2	1	0
Access : POR						RW : 0		
Bit Name						AMOD0[2:0]		

This register is used to select the modulator bits used with each column.

Use the register tables above, in addition to the detailed register bit descriptions below, to determine which bits are reserved. In the table above, note that reserved bits are grayed table cells and are not described in the bit description section below. Reserved bits should always be written with a value of '0'. For additional information, refer to the "Register Definitions" on page 170 in the Analog Interface chapter.

Bits	Name	Description
2:0	**AMOD0[2:0]**	Analog modulation control signal selection for column 0. 000b Zero (off) 001b Global Output Bus, even bus bit 1 (GOE[1]) 010b Global Output Bus, even bus bit 0 (GOE[0]) 011b Row 0 Broadcast Bus 100b Analog Column Comparator 0 101b Analog Column Comparator 1 110b Analog Column Comparator 2 111b Analog Column Comparator 3

OBSOLETE

39.3.13 CMP_GO_EN

Comparator Bus to Global Outputs Enable Register

Individual Register Names and Addresses:

CMP_GO_EN: 1,64h

	7	6	5	4	3	2	1	0
Access : POR	RW : 0	RW : 0	RW : 0		RW : 0	RW : 0	RW : 0	
Bit Name	GOO5	GOO1	SEL1[1:0]		GOO4	GOO0	SEL0[1:0]	

This register controls options for driving the analog comparator bus and column clock to the global bus.

Bits	Name	Description
7	**GOO5**	Drives the selected column 1 signal to GOO5.
6	**GOO1**	Drives the selected column 1 signal to GOO1.
5:4	**SEL1[1:0]**	Selects the column 1 signal to output. 00b Comparator bus output 01b PHI1 column clock 10b PHI2 column clock 11b Selected column clock direct (1X)
3	**GOO4**	Drives the selected column 0 signal to GOO4.
2	**GOO0**	Drives the selected column 0 signal to GOO0.
1:0	**SEL0[1:0]**	Selects the column 0 signal to output. 00b Comparator bus output 01b PHI1 column clock 10b PHI2 column clock 11b Selected column clock direct (1X)

OBSOLETE

39.3.14 AMD_CR1

Analog Modulation Control Register 1

Individual Register Names and Addresses:

AMD_CR1: 1,66h

	7	6	5	4	3	2	1	0
Access : POR						RW : 0		
Bit Name						AMOD1[2:0]		

This register is used to select the modulator bits used with each column.

Use the register tables above, in addition to the detailed register bit descriptions below, to determine which bits are reserved. Note that reserved bits are grayed table cells and are not described in the bit description section. Reserved bits should always be written with a value of '0'. For additional information, refer to the "Register Definitions" on page 170 in the Analog Interface chapter.

Bits	Name	Description
2:0	**AMOD1[2:0]**	Analog modulation control signal selection for column 1. 000b Zero (off) 001b Global Output Bus, even bus bit 1 (GOE[1]) 010b Global Output Bus, even bus bit 0 (GOE[0]) 011b Row 0 Broadcast Bus 100b Analog Column Comparator 0 101b Analog Column Comparator 1 110b Analog Column Comparator 2 111b Analog Column Comparator 3

OBSOLETE

39.3.15 ALT_CR0

Analog LUT Control Register 0

Individual Register Names and Addresses:

ALT_CR0: 1,67h

	7	6	5	4	3	2	1	0
Access : POR	RW : 0				RW : 0			
Bit Name	LUT1[3:0]				LUT0[3:0]			

This register is used to select the logic function.

Use the register tables above, in addition to the detailed register bit descriptions below, to determine which bits are reserved. Note that reserved bits are grayed table cells and are not described in the bit description section. Reserved bits should always be written with a value of '0'. For additional information, refer to the "Register Definitions" on page 170 in the Analog Interface chapter.

Bits	Name	Description
7:4	LUT1[3:0]	Select 1 of 16 logic functions for output of comparator bus 1. For a 1 column device, LUT input B=0.

	Function
0h	FALSE
1h	A AND B
2h	A AND $\overline{B}$
3h	A
4h	$\overline{A}$ AND B
5h	B
6h	A XOR B
7h	A OR B
8h	A NOR B
9h	A XNOR B
Ah	$\overline{B}$
Bh	A OR $\overline{B}$
Ch	$\overline{A}$
Dh	$\overline{A}$ OR B
Eh	A NAND B
Fh	TRUE

(continued on next page)

OBSOLETE

39.3.15 ALT_CR0 *(continued)*

3:0 **LUT0[3:0]** Select 1 of 16 logic functions for output of comparator bus 0.

	Function
0h	FALSE
1h	A AND $\overline{B}$
2h	A AND $\overline{B}$
3h	$\overline{A}$
4h	$\overline{A}$ AND B
5h	B
6h	A XOR B
7h	A OR B
8h	A NOR B
9h	$\overline{A}$ XNOR B
Ah	$\overline{B}$
Bh	$\overline{A}$ OR $\overline{B}$
Ch	$\overline{A}$
Dh	$\overline{A}$ OR B
Eh	A NAND B
Fh	TRUE

OBSOLETE

39.3.16 ALT_CR1

Analog LUT Control Register 1

Individual Register Names and Addresses:

ALT_CR1: 1,68h

4 COLUMN	7	6	5	4	3	2	1	0
Access : POR	RW : 0				RW : 0			
Bit Name	LUT3[3:0]				LUT2[3:0]			

This register is used to select the logic function performed by the LUT for each analog column.

For additional information, refer to the "Register Definitions" on page 170 in the Analog Interface chapter.

Bits	Name	Description
7:4	LUT3[3:0]	Select 1 of 16 logic functions for output of comparator bus 3.

	Function
0h	FALSE
1h	A AND $\overline{B}$
2h	A AND B
3h	$\overline{A}$
4h	$\overline{A}$ AND B
5h	B
6h	A XOR B
7h	A OR B
8h	A NOR B
9h	$\overline{A}$ XNOR B
Ah	$\overline{B}$
Bh	A OR $\overline{B}$
Ch	$\overline{A}$
Dh	$\overline{A}$ OR B
Eh	A NAND B
Fh	TRUE

Bits	Name	Description
3:0	LUT2[3:0]	Select 1 of 16 logic functions for output of comparator bus 2.

	Function
0h	FALSE
1h	A AND $\overline{B}$
2h	A AND B
3h	$\overline{A}$
4h	$\overline{A}$ AND B
5h	B
6h	A XOR B
7h	A OR B
8h	A NOR B
9h	$\overline{A}$ XNOR B
Ah	$\overline{B}$
Bh	A OR $\overline{B}$
Ch	$\overline{A}$
Dh	$\overline{A}$ OR B
Eh	A NAND B
Fh	TRUE

OBSOLETE

39.3.17 CLK_CR2

Analog Clock Source Control Register 2

Individual Register Names and Addresses:

CLK_CR2: 1,69h

4 COLUMN	7	6	5	4	3	2	1	0
Access : POR					RW : 0			RW : 0
Bit Name					ACLK1R			ACLK0R

This register, in conjunction with the CLK_CR1 and CLK_CR0 registers, selects a digital block as a source for analog column clocking.

These bits extend the range of the Digital PSoC blocks that may be selected for the analog clock source in CLK_CR1 from eight to 16. In the table above, note that reserved bits are grayed table cells and are not described in the bit description section below. Reserved bits should always be written with a value of '0'. For additional information, refer to the "Register Definitions" on page 170 in the Analog Interface chapter.

Bits	Name	Description
3	**ACLK1R**	Analog Clock 1 Selection Range 0 Select Digital PSoC Block, from row 0 and 1 (00-13). 1 Reserved.
0	**ACLK0R**	Analog Clock 0 Selection Range 0 Select Digital PSoC Block, from row 0 and 1 (00-13). 1 Reserved.

OBSOLETE

39.3.18 TMP_DRx

Temporary Data Register

Individual Register Names and Addresses:

TMP_DR0 : x,6Ch TMP_DR1 : x,6Dh TMP_DR2 : x,6Eh TMP_DR3 : x,6Fh

	7	6	5	4	3	2	1	0
Access : POR	RW : 00							
Bit Name	Data[7:0]							

This register enhances performance in multiple SRAM page PowerPSoC devices.

All bits in this register are reserved for PowerPSoC devices with 256 bytes of SRAM. Refer to the table titled “PowerPSoC Device SRAM Availability” on page 63. For additional information, refer to the “Register Definitions” on page 66 in the RAM Paging chapter.

Bit	Name	Description
7:0	**Data[7:0]**	General purpose register space.

OBSOLETE

39.3.19 GDRVx_CR

Gate Driver Control Register

Individual Register Names and Addresses:

GDRV0_CR :1,79h GDRV1_CR : 1,7Bh GDRV2_CR : 1,7Dh GDRV3_TC : 1,7Fh

	7	6	5	4	3	2	1	0
Access : POR					RW :0		RW : 0	RW :0
Bit Name					DRV_SRT[1:0]		INT	EXT

The Gate Driver Control Register (GDRVx_CR) is used to configure the gate driver.

In the table above, note that reserved bits are grayed table cells and are not described in the bit description section below. Reserved bits should always be written with a value of '0'.

Note GDRV3_CR is not applicable in CY8CLED01D01 (1 channel PowerPSoC), CY8CLED02D01 (2 channel PowerPSoC) and CY8CLED03D/G0x (3 channel PowerPSoC) devices.

GDRV2_CR is not applicable in CY8CLED01D01 (1 channel PowerPSoC) and CY8CLED02D01 (2 channel PowerPSoC) devices.

GDRV1_CR is not applicable in the CY8CLED01D01 (1 channel PowerPSoC) device.

Bits	Name	Description	
3:2	**DRV_SRT[1:0]**	00	Default drive strength for the gate driver
		01	75% of the default drive strength for the gate driver
		10	50% of the default drive strength for the gate driver
		11	25% of the default drive strength for the gate driver
1:0	**INT, EXT**	00	Disables the internal and external gate drivers with outputs pulled to ground.
		01	External gate driver enabled to drive external FET ARRAY.
		10	Internal gate driver enabled to drive internal FET ARRAY.
		11	Both Internal and external gate drivers enabled. Both internal and external gate drivers should not be enabled at the same time due to the noise concerns. No AC performance is guaranteed with this condition.

OBSOLETE

39.3.20 AMUX_CLK

Analog Mux Clock Register

Individual Register Names and Addresses:

AMUX_CLK: 1,AFh

2 Column	7	6	5	4	3	2	1	0
Access : POR							RW : 0	
Bit Name							CLKSYNC[1:0]	

This register is used to adjust the phase of the clock to the analog mux bus.

In the table above, note that reserved bits are grayed table cells and are not described in the bit description section below. Reserved bits should always be written with a value of '0'.

Bits	Name	Description
1:0	CLKSYNC[1:0]	Synchronizes the MUXCLK. The MUXCLK that drives switching on the analog mux can be synchronized to one of four phases, as listed below. These settings can be used to optimize noise performance by varying the analog mux sampling point relative to the system clock. 00b Synchronize to SYSCLK rising edge 01b Synchronize to delayed (approximately 5 ns) SYSCLK rising edge 10b Synchronize to SYSCLK falling edge 11b Synchronize to early (approximately 5 ns) SYSCLK rising edge

OBSOLETE

39.3.21 CMPCHx_CR

Power Channel Comparator Control Registers

Individual Register Names and Addresses:

CMPCH0_CR :1,C0h CMPCH2_CR :1,C1h CMPCH4_CR :1,C2h CMPCH6_CR :1,C3h

	7	6	5	4	3	2	1	0
Access : POR	RW : 0		RW : 0	RW : 0	RW : 0		RW : 0	RW : 0
Bit Name	INVERT_O		HYS_XL_O	EN_O	INVERT_E		HYS_XL_E	EN_E

This register used to enable and configure the comparator block (even and odd) in the hysteretic channel.

Note CMPCH3_CR is not applicable in CY8CLED01D01 (1 channel PowerPSoC), CY8CLED02D01 (2 channel PowerPSoC) and CY8CLED03D/G0x (3 channel PowerPSoC) devices.

CMPCH2_CR is not applicable in CY8CLED01D01 (1 channel PowerPSoC) and CY8CLED02D01 (2 channel PowerPSoC) devices.

CMPCH1_CR is not applicable in the CY8CLED01D01 (1 channel PowerPSoC) device.

Bit	Name	Description
7	**INVERT_O**	Output invert select for odd comparators (CMP 1/3/5/7). 0 Non-invert output 1 Invert output
5	HYS_XL_O	Hysteresis enable, active low for odd comparators (CMP 1/3/5/7). 0 Hysteresis enabled 1 Hysteresis disabled
4	**EN_O**	Block enable signal for odd comparators (CMP 1/3/5/7). 0 Block disabled (output low) 1 Block enabled
3	**INVERT_E**	Output invert select for even comparators (CMP 0/2/4/6). 0 Non-invert output 1 Invert output
1	**HYS_XL_E**	Hysteresis enable, active low for even comparators (CMP 0/2/4/6). 0 Hysteresis enabled 1 Hysteresis disabled
0	**EN_E**	Block enable signal for even comparators (CMP 0/2/4/6). 0 Block disabled (output low) 1 Block enabled

OBSOLETE

39.3.22 CMPBNKx_CR

Comparator Control Registers

Individual Register Names and Addresses:

CMPBNK8_CR :1,C4h CMPBNK9_CR :1,C5h CMPBNK10_CR :1,C6h CMPBNK11_CR :1,C7h
CMPBNK12_CR :1,C8h CMPBNK13_CR :1,C9h

	7	6	5	4	3	2	1	0
Access : POR					RW : 0		RW : 0	RW : 0
Bit Name					INVERT		HYS_XL	EN

This register used to enable and configure the six comparators in the comparator bank. Bits [7:4] are reserved and return previous DB bus value upon reset and read operations. In the table above, note that reserved bits are grayed table cells and are not described in the bit description section below. Reserved bits should always be written with a value of '0'.

Bit	Name	Description
3	**INVERT**	Output invert select. 0 Non-invert output 1 Invert output
1	**HYS_XL**	Hysteresis enable, active low. 0 Hysteresis enabled 1 Hysteresis disabled
0	**EN**	Block enable signal. 0 Block disabled (output low) 1 Block enabled

OBSOLETE

39.3.23 GDI_O_IN

Global Digital Interconnect Odd Inputs Register

Individual Register Names and Addresses:

GDI_O_IN: 1,D0h

	7	6	5	4	3	2	1	0
Access : POR	RW : 0	RW : 0	RW : 0	RW : 0	RW : 0	RW : 0	RW : 0	RW : 0
Bit Name	GIONOUT7	GIONOUT6	GIONOUT5	GIONOUT4	GIONOUT3	GIONOUT2	GIONOUT1	GIONOUT0

This register is used to configure a global input to drive a global output.

For additional information, refer to the "Register Definitions" on page 111 in the Global Digital Interconnect chapter.

Bit	Name	Description	
7	**GIONOUT7**	0	GIO[7] does not drive GOO[7].
		1	GIO[7] drives its value on to GOO[7].
6	**GIONOUT6**	0	GIO[6] does not drive GOO[6].
		1	GIO[6] drives its value on to GOO[6].
5	**GIONOUT5**	0	GIO[5] does not drive GOO[5].
		1	GIO[5] drives its value on to GOO[5].
4	**GIONOUT4**	0	GIO[4] does not drive GOO[4].
		1	GIO[4] drives its value on to GOO[4].
3	**GIONOUT3**	0	GIO[3] does not drive GOO[3].
		1	GIO[3] drives its value on to GOO[3].
2	**GIONOUT2**	0	GIO[2] does not drive GOO[2].
		1	GIO[2] drives its value on to GOO[2].
1	**GIONOUT1**	0	GIO[1] does not drive GOO[1].
		1	GIO[1] drives its value on to GOO[1].
0	**GIONOUT0**	0	GIO[0] does not drive GOO[0].
		1	GIO[0] drives its value on to GOO[0].

OBSOLETE

39.3.24 GDI_E_IN

Global Digital Interconnect Even Inputs Register

Individual Register Names and Addresses:

GDI_E_IN: 1,D1h

	7	6	5	4	3	2	1	0
Access : POR	RW : 0	RW : 0	RW : 0	RW : 0	RW : 0	RW : 0	RW : 0	RW : 0
Bit Name	GIENOUT7	GIENOUT6	GIENOUT5	GIENOUT4	GIENOUT3	GIENOUT2	GIENOUT1	GIENOUT0

This register is used to configure a global input to drive a global output.

For additional information, refer to the "Global Digital Interconnect (GDI)" on page 109 in the Global Digital Interconnect chapter.

Bit	Name		Description
7	**GIENOUT7**	0	GIE[7] does not drive GOE[7].
		1	GIE[7] drives its value on to GOE [7].
6	**GIENOUT6**	0	GIE[6] does not drive GOE[6].
		1	GIE[6] drives its value on to GOE [6].
5	**GIENOUT5**	0	GIE[5] does not drive GOE[5].
		1	GIE[5] drives its value on to GOE [5].
4	**GIENOUT4**	0	GIE[4] does not drive GOE[4].
		1	GIE[4] drives its value on to GOE [4].
3	**GIENOUT3**	0	GIE[3] does not drive GOE[3].
		1	GIE[3] drives its value on to GOE [3].
2	**GIENOUT2**	0	GIE[2] does not drive GOE[2].
		1	GIE[2] drives its value on to GOE [2].
1	**GIENOUT1**	0	GIE[1] does not drive GOE[1].
		1	GIE[1] drives its value on to GOE [1].
0	**GIENOUT0**	0	GIE[0] does not drive GOE[0].
		1	GIE[0] drives its value on to GOE [0].

OBSOLETE

39.3.25 GDI_O_OU

Global Digital Interconnect Odd Outputs Register

Individual Register Names and Addresses:

GDI_O_OU: 1,D2h

	7	6	5	4	3	2	1	0
Access : POR	RW : 0	RW : 0	RW : 0	RW : 0	RW : 0	RW : 0	RW : 0	RW : 0
Bit Name	GOOUTIN7	GOOUTIN6	GOOUTIN5	GOOUTIN4	GOOUTIN3	GOOUTIN2	GOOUTIN1	GOOUTIN0

This register is used to configure a global output to drive a global input.

For additional information, refer to the "Global Digital Interconnect (GDI)" on page 109 in the Global Digital Interconnect chapter.

Bit	Name	Description	
7	**GOOUTIN7**	0 1	GOO[7] does not drive GIO[7]. GOO[7] drives its value on to GIO[7].
6	**GOOUTIN6**	0 1	GOO[6] does not drive GIO[6]. GOO[6] drives its value on to GIO[6].
5	**GOOUTIN5**	0 1	GOO[5] does not drive GIO[5]. GOO[5] drives its value on to GIO[5].
4	**GOOUTIN4**	0 1	GOO[4] does not drive GIO[4]. GOO[4] drives its value on to GIO[4].
3	**GOOUTIN3**	0 1	GOO[3] does not drive GIO[3]. GOO[3] drives its value on to GIO[3].
2	**GOOUTIN2**	0 1	GOO[2] does not drive GIO[2]. GOO[2] drives its value on to GIO[2].
1	**GOOUTIN1**	0 1	GOO[1] does not drive GIO[1]. GOO[1] drives its value on to GIO[1].
0	**GOOUTIN0**	0 1	GOO[0] does not drive GIO[0]. GOO[0] drives its value on to GIO[0].

OBSOLETE

39.3.26 GDI_E_OU

Global Digital Interconnect Even Outputs Register

Individual Register Names and Addresses:

GDI_E_OU: 1,D3h

	7	6	5	4	3	2	1	0
Access : POR	RW : 0	RW : 0	RW : 0	RW : 0	RW : 0	RW : 0	RW : 0	RW : 0
Bit Name	GOEUTIN7	GOEUTIN6	GOEUTIN5	GOEUTIN4	GOEUTIN3	GOEUTIN2	GOEUTIN1	GOEUTIN0

This register is used to configure a global output to drive a global input.

For additional information, refer to the "Global Digital Interconnect (GDI)" on page 109 in the Global Digital Interconnect chapter.

Bit	Name		Description
7	**GOEUTIN7**	0	GOE[7] does not drive GIE[7].
		1	GOE[7] drives its value on to GIE[7].
6	**GOEUTIN6**	0	GOE[6] does not drive GIE[6].
		1	GOE[6] drives its value on to GIE[6].
5	**GOEUTIN5**	0	GOE[5] does not drive GIE[5].
		1	GOE[5] drives its value on to GIE[5].
4	**GOEUTIN4**	0	GOE[4] does not drive GIE[4].
		1	GOE[4] drives its value on to GIE[4].
3	**GOEUTIN3**	0	GOE[3] does not drive GIE[3].
		1	GOE[3] drives its value on to GIE[3].
2	**GOEUTIN2**	0	GOE[2] does not drive GIE[2].
		1	GOE[2] drives its value on to GIE[2].
1	**GOEUTIN1**	0	GOE[1] does not drive GIE[1].
		1	GOE[1] drives its value on to GIE[1].
0	**GOEUTIN0**	0	GOE[0] does not drive GIE[0].
		1	GOE[0] drives its value on to GIE[0].

OBSOLETE

39.3.27 HYSCTLRx_CR

Hysteretic Controller Configuration Register

Individual Register Names and Addresses:

HYSCTLR0_CR: 1,D4h HYSCTLR1_CR: 1,D5h HYSCTLR2_CR: 1,D6h HYSCTLR3_CR: 1,D7h

	7	6	5	4	3	2	1	0
Access : POR					RW : 0		# : 0	RW : 0
Bit Name					MONOSHOT[1:0]		HYST_CREG	EN

This register is used for hysteretic controller configuration.

Reserved bits should always be written with a value of '0'. For additional information, refer to the "Register Definitions" on page 318 in the Hysteretic Controller chapter. In the table above, note that reserved bits are grayed table cells and are not described in the bit description section below. Reserved bits should always be written with a value of '0'.

Note HYSCTLR3_CR is not applicable in CY8CLED01D01 (1 channel PowerPSoC), CY8CLED02D01 (2 channel PowerPSoC) and CY8CLED03D/G0x (3 channel PowerPSoC) devices.

HYSCTLR2_CR is not applicable in CY8CLED01D01 (1 channel PowerPSoC) and CY8CLED02D01 (2 channel PowerPSoC) devices.

HYSCTLR1_CR is not applicable in the CY8CLED01D01 (1 channel PowerPSoC) device.

Bit	Name	Description
3:2	**MONOSHOT[1:0]**	Two-bit monoshot programmability. 00 10-30 ns (monostable) timer delay for both ON and OFF timers. 01 20-60 ns (monostable) timer delay for both ON and OFF timers. 10 40-110 ns (monostable) timer delay for both ON and OFF timers. 11 No delay from both timers.
1	**HYST_CREG**	0 Default 1 Write to enable (default) hysteretic controller either after power up or after a shutdown event. **Note** The HYST_CREG bit is a Write Only access bit.
0	**EN**	0 Hysteretic controller disabled. 1 Hysteretic controller enabled.

OBSOLETE

39.3.28 MUX_CRx

Analog Mux Port Bit Enables Register

Individual Register Names and Addresses:

MUX_CR0 : 1,D8h MUX_CR1 : 1,D9h MUX_CR2 : 1,DAh

	7	6	5	4	3	2	1	0
Access : POR	RW : 00							
Bit Name	ENABLE[7:0]							

This register is used to control the connection between the analog mux bus and the corresponding pin.

Any port bit that is not available for a port, this register will return 0 for that bit upon read. For additional information, refer to the “Register Definitions” on page 268 in the I/O Analog Multiplexer chapter.

Bits	Name	Description
7:0	**ENABLE[7:0]**	Each bit controls the connection between the analog mux bus and the corresponding port pin. For example, MUX_CR2[3] controls the connection to bit 3 in Port 2. Any number of pins may be connected at the same time. Note that if a precharge clock is selected in the AMUX_CFG register, the connection to the mux bus will be switched on and off under hardware control. 0 No connection between port pin and analog mux bus. 1 Connect port pin to analog mux bus.

OBSOLETE

39.3.29 SREG_TST

Switching Regulator Test Register

Individual Register Names and Addresses:

SREG_TST : 1,DCh

	7	6	5	4	3	2	1	0
Access : POR		RW : 0						RW : 0
Bit Name		POR_XH_REG						PD_XH

This register is used for power down mode of the switching regulator block. In the table above, note that reserved bits are grayed table cells and are not described in the bit description section below. Reserved bits should always be written with a value of '0'.

Bits	Name	Description	
6,0	POR_XH_REG, PD_XH	00	Regulator operates in sleep mode.
		10	Regulator operates in active mode.
		x1	Regulator in the power down mode. A 5 V external power supply is required to enter and remain in power down mode.
			Note If the switching regulator is disabled through wiring its input pins, then it must be disabled through software as well (bit SREG_TST[0] = 1, which is set in the Interconnect View of PSoC Designer™ 5.0).

OBSOLETE

39.3.30 OSC_GO_EN

Oscillator to Global Outputs Enable Register

Individual Register Names and Addresses:

OSC_GO_EN: 1,DDh

	7	6	5	4	3	2	1	0
Access : POR	RW : 0	RW : 0	RW : 0	RW : 0	RW : 0	RW : 0	RW : 0	RW : 0
Bit Name	SLPINT	VC3	VC2	VC1	SYSCLKX2	SYSCLK	CLK24M	CLK32K

This register is used to enable tri-state buffers that connect specific system clocks to specific global output even nets.

For additional information, refer to the "Register Definitions" on page 217 in the Digital Clocks chapter.

Bit	Name		Description
7	**SLPINT**	0	The sleep interrupt is not driven onto a global net.
		1	The sleep interrupt is driven onto GOE[7].
6	**VC3**	0	The VC3 clock is not driven onto a global net
		1	The VC3 clock is driven onto GOE[6]
5	**VC2**	0	The VC2 clock is not driven onto a global net
		1	The VC2 clock is driven onto GOE[5]
4	**VC1**	0	The VC1 clock is not driven onto a global net
		1	The VC1 clock is driven onto GOE[4]
3	**SYSCLKX2**	0	The 2 times system clock is not driven onto a global net
		1	The 2 times system clock is driven onto GOE[3]
2	**SYSCLK**	0	The system clock is not driven onto a global net
		1	The system clock is driven onto GOE[2]
1	**CLK24M**	0	The 24 MHz clock is not driven onto a global net
		1	The 24 MHz system clock is driven onto GOE[1]
0	**CLK32K**	0	The 32 kHz clock is not driven onto a global net
		1	The 32 kHz system clock is driven onto GOE[0]

OBSOLETE

39.3.31 OSC_CR4

Oscillator Control Register 4

Individual Register Names and Addresses:

OSC_CR4: 1,DEh

	7	6	5	4	3	2	1	0
Access : POR							RW : 0	
Bit Name							VC3 Input Select[1:0]	

This register selects the input clock to variable clock 3 (VC3).

In the table above, note that reserved bits are grayed table cells and are not described in the bit description section below. Reserved bits should always be written with a value of '0'. For additional information, refer to the "Register Definitions" on page 217 in the Digital Clocks chapter.

Bit	Name	Description
1:0	**VC3 Input Select[1:0]**	Selects the clocking source for the VC3 Clock Divider. 00b SYSCLK 01b VC1 10b VC2 11b SYSCLKX2

OBSOLETE

39.3.32 OSC_CR3

Oscillator Control Register 3

Individual Register Names and Addresses:

OSC_CR3: 1,DFh

	7	6	5	4	3	2	1	0
Access : POR	RW : 00							
Bit Name	VC3 Divider[7:0]							

This register selects the divider value for variable clock 3 (VC3).

The output frequency of the VC3 Clock Divider is the input frequency divided by the value in this register, plus one. For example, if this register contains 07h, the clock frequency output from the VC3 Clock Divider will be one eighth the input frequency. For additional information, refer to the “Register Definitions” on page 217 in the Digital Clocks chapter.

Bit	Name	Description
7:0	**VC3 Divider[7:0]**	Refer to the OSC_CR4 register. 00h Input Clock 01h Input Clock / 2 02h Input Clock / 3 03h Input Clock / 4 ... ... FCh Input Clock / 253 FDh Input Clock / 254 FEh Input Clock / 255 FFh Input Clock / 256

OBSOLETE

39.3.33 OSC_CR0

Oscillator Control Register 0

Individual Register Names and Addresses:

OSC_CR0: 1,E0h

	7	6	5	4	3	2	1	0
Access : POR			RW : 0	RW : 0		RW : 0		
Bit Name			No Buzz	Sleep[1:0]		CPU Speed[2:0]		

This register is used to configure various features of internal clock sources and clock nets.

For additional information, refer to the "Register Definitions" on page 217 in the Digital Clocks chapter.

Bit	Name	Description
5	**No Buzz**	0 BUZZ bandgap during power down. 1 Bandgap is always powered even during sleep.
4:3	**Sleep[1:0]**	Sleep Interval 00b 1.95 ms (512 Hz) 01b 15.6 ms (64 Hz) 10b 125 ms (8 Hz) 11b 1 s (1 Hz)
2:0	**CPU Speed[2:0]**	These bits set the CPU clock speed, based on the system clock (SYSCLK). SYSCLK is 24 MHz by default or driven from an external clock. **24 MHz IMO / External Clock** 000b 3 MHz / EXTCLK / 8 001b 6 MHz / EXTCLK / 4 010b 12 MHz / EXTCLK / 2 011b 24 MHz / EXTCLK / 1 100b 1.5 MHz / EXTCLK / 16 101b 750 kHz / EXTCLK / 32 110b 187.5 kHz / EXTCLK / 128 111b 93.7 kHz / EXTCLK / 256

OBSOLETE

39.3.34 OSC_CR1

Oscillator Control Register 1

Individual Register Names and Addresses:

OSC_CR1: 1,E1h

	7	6	5	4	3	2	1	0
Access : POR	RW : 0				RW : 0			
Bit Name	VC1 Divider[3:0]				VC2 Divider[3:0]			

This register selects the divider value for variable clocks 1 and 2 (VC1 and VC2).

For additional information, refer to the "Register Definitions" on page 217 in the Digital Clocks chapter.

Bit	Name	Description		
7:4	**VC1 Divider[3:0]**		**Internal Main Oscillator**	**External Clock**
		0h	24 MHz	EXTCLK / 1
		1h	12 MHz	EXTCLK / 2
		2h	8 MHz	EXTCLK / 3
		3h	6 MHz	EXTCLK / 4
		4h	4.8 MHz	EXTCLK / 5
		5h	4 MHz	EXTCLK / 6
		6h	3.43 MHz	EXTCLK / 7
		7h	3 MHz	EXTCLK / 8
		8h	2.67 MHz	EXTCLK / 9
		9h	2.40 MHz	EXTCLK / 10
		Ah	2.18 MHz	EXTCLK / 11
		Bh	2.00 MHz	EXTCLK / 12
		Ch	1.85 MHz	EXTCLK / 13
		Dh	1.71 MHz	EXTCLK / 14
		Eh	1.6 MHz	EXTCLK / 15
		Fh	1.5 MHz	EXTCLK / 16
3:0	**VC2 Divider[3:0]**		**Internal Main Oscillator**	**External Clock**
		0h	(24 / (OSC_CR1[7:4]+1)) / 1	(EXTCLK / (OSC_CR1[7:4]+1)) / 1
		1h	(24 / (OSC_CR1[7:4]+1)) / 2	(EXTCLK / (OSC_CR1[7:4]+1)) / 2
		2h	(24 / (OSC_CR1[7:4]+1)) / 3	(EXTCLK / (OSC_CR1[7:4]+1)) / 3
		3h	(24 / (OSC_CR1[7:4]+1)) / 4	(EXTCLK / (OSC_CR1[7:4]+1)) / 4
		4h	(24 / (OSC_CR1[7:4]+1)) / 5	(EXTCLK / (OSC_CR1[7:4]+1)) / 5
		5h	(24 / (OSC_CR1[7:4]+1)) / 6	(EXTCLK / (OSC_CR1[7:4]+1)) / 6
		6h	(24 / (OSC_CR1[7:4]+1)) / 7	(EXTCLK / (OSC_CR1[7:4]+1)) / 7
		7h	(24 / (OSC_CR1[7:4]+1)) / 8	(EXTCLK / (OSC_CR1[7:4]+1)) / 8
		8h	(24 / (OSC_CR1[7:4]+1)) / 9	(EXTCLK / (OSC_CR1[7:4]+1)) / 9
		9h	(24 / (OSC_CR1[7:4]+1)) / 10	(EXTCLK / (OSC_CR1[7:4]+1)) / 10
		Ah	(24 / (OSC_CR1[7:4]+1)) / 11	(EXTCLK / (OSC_CR1[7:4]+1)) / 11
		Bh	(24 / (OSC_CR1[7:4]+1)) / 12	(EXTCLK / (OSC_CR1[7:4]+1)) / 12
		Ch	(24 / (OSC_CR1[7:4]+1)) / 13	(EXTCLK / (OSC_CR1[7:4]+1)) / 13
		Dh	(24 / (OSC_CR1[7:4]+1)) / 14	(EXTCLK / (OSC_CR1[7:4]+1)) / 14
		Eh	(24 / (OSC_CR1[7:4]+1)) / 15	(EXTCLK / (OSC_CR1[7:4]+1)) / 15
		Fh	(24 / (OSC_CR1[7:4]+1)) / 16	(EXTCLK / (OSC_CR1[7:4]+1)) / 16

OBSOLETE

39.3.35 OSC_CR2

Oscillator Control Register 2

Individual Register Names and Addresses:

OSC_CR2: 1,E2h

	7	6	5	4	3	2	1	0
Access : POR						RW : 0	RW : 0	RW : 0
Bit Name						EXTCLKEN	RSVD	SYSCLKX2DIS

This register is used to configure various features of internal clock sources and clock nets.

In OCD mode (OCDM=1), bits [1:0] have no effect. In the table above, note that reserved bits are grayed table cells and are not described in the bit description section below. Reserved bits should always be written with a value of '0'. For additional information, refer to the "Register Definitions" on page 217 in the Digital Clocks chapter.

Bit	Name	Description
2	**EXTCLKEN**	External clock mode enable. 0 Disabled. Operate from internal main oscillator. 1 Enabled. Operate from clock supplied at port P1[4].
1	**RSVD**	This is a reserved bit. It should always be 0.
0	**SYSCLKX2DIS**	48 MHz clock source disable. 0 Enabled. If enabled, system clock net is forced on. 1 Disabled for power reduction.

OBSOLETE

39.3.36 VLT_CR

Voltage Monitor Control Register

Individual Register Names and Addresses:

VLT_CR: 1,E3h

	7	6	5	4	3	2	1	0
Access : POR			RW : 0		RW : 0	RW : 0		
Bit Name			PORLEV[1:0]		LVDTBEN	VM[2:0]		

This register is used to set the trip points for POR, LVD, and the supply pump.

Use the register tables above, in addition to the detailed register bit descriptions below, to determine which bits are reserved. Note that reserved bits are grayed table cells and are not described in the bit description section. Reserved bits should always be written with a value of '0'. For additional information, refer to the "Register Definitions" on page 264 in the POR and LVD chapter.

Bit	Name	Description
5:4	**PORLEV[1:0]**	Sets the POR level per the DC electrical specifications in the PowerPSoC device data sheet. 10b POR level for 4.75V operation
3	**LVDTBEN**	Enables reset of CPU speed register by LVD comparator output. 0 Disables CPU speed throttle-back. 1 Enables CPU speed throttle-back.
2:0	**VM[2:0]**	Sets the LVD and pump levels per the DC electrical specifications in the PowerPSoC device data sheet, for those PowerPSoC devices with this feature. 000b Lowest voltage setting 001b 010b . 011b . 100b . 101b 110b 111b Highest voltage setting

OBSOLETE

39.3.37 VLT_CMP

Voltage Monitor Comparators Register

Individual Register Names and Addresses:

VLT_CMP: 1,E4h

	7	6	5	4	3	2	1	0
Access : POR							R : 0	R : 0
Bit Name							LVD	PPOR

This register is used to read the state of internal supply voltage monitors.

Use the register tables above, in addition to the detailed register bit descriptions below, to determine which bits are reserved. In the table above, note that reserved bits are grayed table cells and are not described in the bit description section. Reserved bits should always be written with a value of '0'. For additional information, refer to the "Register Definitions" on page 264 in the POR and LVD chapter.

Bit	Name	Description
1	**LVD**	Reads state of LVD comparator. 0 Vdd is above LVD trip point. 1 Vdd is below LVD trip point.
0	**PPOR**	Reads state of Precision POR comparator (only useful with PPOR reset disabled, with PORLEV[1:0] in VLT_CR register set to 11b). 0 Vdd is above PPOR trip voltage. 1 Vdd is below PPOR trip voltage.

OBSOLETE

39.3.38 DEC_CR2

Decimator Control Register 2

Individual Register Names and Addresses:

DEC_CR2: 1,E7h

	7	6	5	4	3	2	1	0
Access : POR	RW : 0		RW : 0		RW : 0	RW : 0		
Bit Name	Mode[1:0]		Data Out Shift[1:0]		Data Format	Decimation Rate[2:0]		

This register is used to configure the decimator before use.

For additional information, refer to the "Register Definitions" on page 233 in the Decimator chapter.

Bits	Name	Description
7:6	**Mode[1:0]**	00b Backward compatibility mode for type 1 decimator blocks. 01b Incremental mode for type 2 decimator blocks. 10b Full mode for type 2 decimator blocks. 11b Reserved
5:4	**Data Out Shift[1:0]**	00b No shifting of bits. 01b Shift all bits to the right by one bit. 10b Shift all bits to the right by two bits. 11b Shift all bits to the right by four bits.
3	**Data Format**	Controls how the input data stream is interpreted by the integrator. 0 A 0/1 input is interpreted as -1/+1. 1 A 0/1 input is interpreted as 0/+1.
2:0	**Decimation Rate[2:0]**	000b Off 001b 32 010b 50 011b 64 100b 125 101b 128 110b 250 111b 256

OBSOLETE

39.3.39 IMO_TR

Internal Main Oscillator Trim Register

Individual Register Names and Addresses:

IMO_TR: 1,E8h

	7	6	5	4	3	2	1	0
Access : POR	RW : 00							
Bit Name	Trim[7:0]							

This register is used to manually center the oscillator's output to a target frequency.

It is strongly recommended that the user not alter this register's values. The value in this register should not be changed. For additional information, refer to the "Register Definitions" on page 89 in the Internal Main Oscillator chapter.

Bit	Name	Description
7:0	**Trim[7:0]**	The value of this register is used to trim the Internal Main Oscillator. Its value is set to the best value for the device during boot. ***The value of these bits should not be changed***. 00h Lowest frequency setting 01h ... ... 7Fh 80h Design center setting 81h ... ... FEh FFh Highest frequency setting

OBSOLETE

39.3.40 ILO_TR

Internal Low Speed Oscillator Trim Register

Individual Register Names and Addresses:

ILO_TR: 1,E9h

	7	6	5	4	3	2	1	0
Access : POR			W : 0		W : 0			
Bit Name			Bias Trim[1:0]		Freq Trim[3:0]			

This register sets the adjustment for the Internal Low Speed Oscillator (ILO).

It is strongly recommended that the user not alter this register's values. The trim bits are set to factory specifications and should not be changed. In the table above, note that reserved bits are grayed table cells and are not described in the bit description section below. Reserved bits should always be written with a value of '0'. For additional information, refer to the "Register Definitions" on page 91 in the Internal Low Speed Oscillator chapter.

Bit	Name	Description
5:4	**Bias Trim[1:0]**	The value of this register is used to trim the Internal Low Speed Oscillator. Its value is set to the device specific, best value during boot. ***The value of these bits should not be changed.*** 00b Medium bias 01b Maximum bias (recommended) 10b Minimum bias 11b Intermediate Bias * * About 15% higher than the minimum bias.
3:0	**Freq Trim[3:0]**	The value of this register is used to trim the Internal Low Speed Oscillator. Its value is set to the device specific, best value during boot. ***The value of these bits should not be changed.***

OBSOLETE

39.3.41 BDG_TR

Bandgap Trim Register

Individual Register Names and Addresses:

BDG_TR: 1,EAh

	7	6	5	4	3	2	1	0
Access : POR			RW : 1		RW : 8			
Bit Name			TC[1:0]		V[3:0]			

This register is used to adjust the bandgap and add an RC filter to AGND.

It is strongly recommended that the user not alter this register's values. The trim bits are set to factory specifications and should not be changed.

Use the register tables above, in addition to the detailed register bit descriptions below, to determine which bits are reserved. Note that reserved bits are grayed table cells and are not described in the bit description section. Reserved bits should always be written with a value of '0'. For additional information, refer to the "Register Definitions" on page 255 in the Internal Voltage Reference chapter.

Bit	Name	Description
5:4	**TC[1:0]**	The value of these bits is used to trim the temperature coefficient. Their value is set to the best value for the device during boot. ***The value of these bits should not be changed.***
3:0	**V[3:0]**	The value of these bits is used to trim the bandgap reference. Their value is set to the best value for the device during boot. ***The value of these bits should not be changed.***

OBSOLETE

39.3.42 DAC_CR

Analog Mux DAC Control Register

Individual Register Names and Addresses:

DAC_CR : 1,FDh

	7	6	5	4	3	2	1	0
Access : POR	RW : 0	RW : 0			RW : 0	RW : 0		RW : 0
Bit Name	SplitMux	MuxClkGE			IRANGE	OSCMODE[1:0]		ENABLE

This register contains the control bits for the DAC current that drives the analog mux bus and for selecting the split configuration.

In the table above, note that reserved bits are grayed table cells and are not described in the bit description section below. Reserved bits should always be written with a value of '0'. For additional information, refer to the "Register Definitions" on page 268.

Bits	Name	Description
7	**SplitMux**	Configures the analog mux bus for the devices. Left side connects to odd pins (P0[1]) and right side connects to even pins (P0[2]) with one exception: P0[7] is a right side pin. 0 Single analog bus mux. 1 Split analog mux bus: left side pins connect to Analog Mux Bus Left and right side pins connect to Analog Mux Bus Right.
6	**MuxClkGE**	Global enable connection for MUXCLK. 0 Analog mux bus clock not connected to global. 1 Connect analog mux bus clock to global GOO[6].
3	**IRANGE**	Sets the DAC range. Note that the value for the unit current is found in the PowerPSoC data sheet. 0 Low range 1 High range (16 times low range)
2:1	**OSCMODE[1:0]**	When set, these bits enable the analog mux bus to reset to Vss whenever the comparator trip point is reached. 00b No automatic reset. 01b Reset whenever GOO[4] is high. 10b Reset whenever GOO[5] is high. 11b Reset whenever either GOO[4] or GOO[5] is high.
0	**ENABLE**	0 DAC function disabled (no DAC current). 1 DAC function enabled. The DAC current charges the analog mux bus. In the PowerPSoC, if the SplitMux is set high, the charging current only charges the mux bus right.

OBSOLETE

Section H: Glossary

The Glossary section explains the terminology used in this technical reference manual. Glossary terms are characterized in ***bold, italic font*** throughout the text of this manual.

A

accumulator	In a CPU, a register in which intermediate results are stored. Without an accumulator, it would be necessary to write the result of each calculation (addition, subtraction, shift, and so on.) to main memory and read them back. Access to main memory is slower than access to the accumulator, which usually has direct paths to and from the arithmetic and logic unit (ALU).
active high	1. A logic signal having its asserted state as the logic 1 state. 2. A logic signal having the logic 1 state as the higher voltage of the two states.
active low	1. A logic signal having its asserted state as the logic 0 state. 2. A logic signal having its logic 1 state as the lower voltage of the two states: inverted logic.
address	The label or number identifying the memory location (RAM, ROM, or register) where a unit of information is stored.
algorithm	A procedure for solving a mathematical problem in a finite number of steps that frequently involve repetition of an operation.
ambient temperature	The temperature of the air in a designated area, particularly the area surrounding the PowerPSoC device.
analog	See ***analog signals***.
analog blocks	The basic programmable opamp circuits. These are SC (switched capacitor) and CT (continuous time) blocks. These blocks can be interconnected to provide ADCs, DACs, multi-pole filters, gain stages, and much more.
analog output	An output that is capable of driving any voltage between the supply rails, instead of just a logic 1 or logic 0.
analog signals	A signal represented in a continuous form with respect to continuous times, as contrasted with a digital signal represented in a discrete (discontinuous) form in a sequence of time.
analog-to-digital (ADC)	A device that changes an analog signal to a digital signal of corresponding magnitude. Typically, an ADC converts a voltage to a digital number. The ***digital-to-analog (DAC)*** converter performs the reverse operation.

OBSOLETE

AND See ***Boolean Algebra***.

API (Application Programming Interface) A series of software routines that comprise an interface between a computer application and lower-level services and functions (for example, user modules and libraries). APIs serve as building blocks for programmers that create software applications.

array An array, also known as a vector or list, is one of the simplest data structures in computer programming. Arrays hold a fixed number of equally-sized data elements, generally of the same data type. Individual elements are accessed by index using a consecutive range of integers, as opposed to an associative array. Most high level programming languages have arrays as a built-in data type. Some arrays are multi-dimensional, meaning they are indexed by a fixed number of integers; for example, by a group of two integers. One- and two-dimensional arrays are the most common. Also, an array can be a group of capacitors or resistors connected in some common form.

assembly A symbolic representation of the machine language of a specific processor. Assembly language is converted to machine code by an assembler. Usually, each line of assembly code produces one machine instruction, though the use of macros is common. Assembly languages are considered low level languages; where as C is considered a high level language.

asynchronous A signal whose data is acknowledged or acted upon immediately, irrespective of any clock signal.

attenuation The decrease in intensity of a signal as a result of absorption of energy and of scattering out of the path to the detector, but not including the reduction due to geometric spreading. Attenuation is usually expressed in dB.

B

bandgap reference A stable voltage reference design that matches the positive temperature coefficient of V_T with the negative temperature coefficient of V_{BE}, to produce a zero temperature coefficient (ideally) reference.

bandwidth
1. The frequency range of a message or information processing system measured in hertz.
2. The width of the spectral region over which an amplifier (or absorber) has substantial gain (or loss); it is sometimes represented more specifically as, for example, full width at half maximum.

bias
1. A systematic deviation of a value from a reference value.
2. The amount by which the average of a set of values departs from a reference value.
3. The electrical, mechanical, magnetic, or other force (field) applied to a device to establish a reference level to operate the device.

bias current The constant low level DC current that is used to produce a stable operation in amplifiers. This current can sometimes be changed to alter the bandwidth of an amplifier.

binary The name for the base 2 numbering system. The most common numbering system is the base 10 numbering system. The base of a numbering system indicates the number of values that may exist for a particular positioning within a number for that system. For example, in base 2, binary, each position may have one of two values (0 or 1). In the base 10, decimal, numbering system, each position may have one of ten values (0, 1, 2, 3, 4, 5, 6, 7, 8, and 9).

OBSOLETE

bit A single digit of a binary number. Therefore, a bit may only have a value of ‘0’ or ‘1’. A group of 8 bits is called a byte. Because the PSoC's M8C is an 8-bit microcontroller, the PSoC's native data chunk size is a byte.

bit rate (BR) The number of bits occurring per unit of time in a bit stream, usually expressed in bits per second (bps).

block
1. A functional unit that performs a single function, such as an oscillator.
2. A functional unit that may be configured to perform one of several functions, such as a digital PSoC block or an analog PSoC block.

Boolean Algebra In mathematics and computer science, Boolean algebras or Boolean lattices, are algebraic structures which "capture the essence" of the logical operations AND, OR and NOT as well as the set theoretic operations union, intersection, and complement. Boolean algebra also defines a set of theorems that describe how Boolean equations can be manipulated. For example, these theorems are used to simplify Boolean equations, which will reduce the number of logic elements needed to implement the equation.

The operators of Boolean algebra may be represented in various ways. Often they are simply written as AND, OR, and NOT. In describing circuits, NAND (NOT AND), NOR (NOT OR), XNOR (exclusive NOT OR), and XOR (exclusive OR) may also be used. Mathematicians often use + (for example, A+B) for OR and • for AND (for example, A*B) (since in some ways those operations are analogous to addition and multiplication in other algebraic structures) and represent NOT by a line drawn above the expression being negated (for example, ~A, A_, !A).

break-before-make The elements involved go through a disconnected state entering (‘break”) before the new connected state (“make”).

broadcast net A signal that is routed throughout the microcontroller and is accessible by many blocks or systems.

buffer
1. A storage area for data that is used to compensate for a speed difference, when transferring data from one device to another. Usually refers to an area reserved for I/O operations, into which data is read, or from which data is written.
2. A portion of memory set aside to store data, often before it is sent to an external device or as it is received from an external device.
3. An amplifier used to lower the output impedance of a system.

bus
1. A named connection of nets. Bundling nets together in a bus makes it easier to route nets with similar routing patterns.
2. A set of signals performing a common function and carrying similar data. Typically represented using vector notation; for example, address[7:0].
3. One or more conductors that serve as a common connection for a group of related devices.

byte A digital storage unit consisting of 8 bits.

C

C A high level programming language.

capacitance A measure of the ability of two adjacent conductors, separated by an insulator, to hold a charge when a voltage differential is applied between them. Capacitance is measured in units of Farads.

OBSOLETE

capture	To extract information automatically through the use of software or hardware, as opposed to hand-entering of data into a computer file.
chaining	Connecting two or more 8-bit digital blocks to form 16-, 24-, and even 32-bit functions. Chaining allows certain signals such as Compare, Carry, Enable, Capture, and Gate to be produced from one block to another.
checksum	The checksum of a set of data is generated by adding the value of each data word to a sum. The actual checksum can simply be the result sum or a value that must be added to the sum to generate a pre-determined value.
clear	To force a bit/register to a value of logic ‘0’.
clock	The device that generates a periodic signal with a fixed frequency and duty cycle. A clock is sometimes used to synchronize different logic blocks.
clock generator	A circuit that is used to generate a clock signal.
CMOS	The logic gates constructed using ***MOS*** transistors connected in a complementary manner. CMOS is an acronym for complementary metal-oxide semiconductor.
comparator	An electronic circuit that produces an output voltage or current whenever two input levels simultaneously satisfy predetermined amplitude requirements.
compiler	A program that translates a high level language, such as C, into machine language.
configuration	In a computer system, an arrangement of functional units according to their nature, number, and chief characteristics. Configuration pertains to hardware, software, firmware, and documentation. The configuration will affect system performance.
configuration space	In PowerPSoC devices, the register space accessed when the XIO bit, in the CPU_F register, is set to ‘1’.
crowbar	A type of over-voltage protection that rapidly places a low resistance shunt (typically an SCR) from the signal to one of the power supply rails, when the output voltage exceeds a predetermined value.
crystal oscillator	An oscillator in which the frequency is controlled by a piezoelectric crystal. Typically a piezoelectric crystal is less sensitive to ambient temperature than other circuit components.
cyclic redundancy check (CRC)	A calculation used to detect errors in data communications, typically performed using a linear feedback shift register. Similar calculations may be used for a variety of other purposes such as data compression.

D

data bus	A bi-directional set of signals used by a computer to convey information from a memory location to the central processing unit and vice versa. More generally, a set of signals used to convey data between digital functions.
data stream	A sequence of digitally encoded signals used to represent information in transmission.
data transmission	The sending of data from one place to another by means of signals over a channel.

OBSOLETE

debugger	A hardware and software system that allows the user to analyze the operation of the system under development. A debugger usually allows the developer to step through the firmware one step at a time, set break points, and analyze memory.
dead band	A period of time when neither of two or more signals are in their active state or in transition.
decimal	A base-10 numbering system, which uses the symbols 0, 1, 2, 3, 4, 5, 6, 7, 8 and 9 (called digits) together with the decimal point and the sign symbols + (plus) and - (minus) to represent numbers.
default value	Pertaining to the pre-defined initial, original, or specific setting, condition, value, or action a system will assume, use, or take in the absence of instructions from the user.
device	The device referred to in this manual is the PowerPSoC chip, unless otherwise specified.
die	An unpackaged integrated circuit (IC), normally cut from a wafer.
digital	A signal or function, the amplitude of which is characterized by one of two discrete values: '0' or '1'.
digital blocks	The 8-bit logic blocks that can act as a counter, timer, serial receiver, serial transmitter, CRC generator, pseudo-random number generator, or SPI.
digital logic	A methodology for dealing with expressions containing two-state variables that describe the behavior of a circuit or system.
digital-to-analog (DAC)	A device that changes a digital signal to an analog signal of corresponding magnitude. The ***analog-to-digital (ADC)*** converter performs the reverse operation.
direct access	The capability to obtain data from a storage device, or to enter data into a storage device, in a sequence independent of their relative positions by means of addresses that indicate the physical location of the data.
duty cycle	The relationship of a clock period ***high time*** to its ***low time***, expressed as a percent.

E

emulator	Duplicates (provides an emulation of) the functions of one system with a different system, so that the second system appears to behave like the first system.
External Reset (XRES)	An active high signal that is driven into the PowerPSoC device. It causes all operation of the CPU and blocks to stop and return to a pre-defined state.

F

falling edge	A transition from a logic 1 to a logic 0. Also known as a negative edge.
feedback	The return of a portion of the output, or processed portion of the output, of a (usually active) device to the input.
filter	A device or process by which certain frequency components of a signal are attenuated.

OBSOLETE

firmware The software that is embedded in a hardware device and executed by the CPU. The software may be executed by the end user, but it may not be modified.

flag Any of various types of indicators used for identification of a condition or event (for example, a character that signals the termination of a transmission).

Flash An electrically programmable and erasable, non-***volatile*** technology that provides users with the programmability and data storage of EPROMs, plus in-system erasability. Non-volatile means that the data is retained when power is off.

Flash bank A group of Flash ROM blocks where Flash block numbers always begin with '0' in an individual Flash bank. A Flash bank also has its own block level protection information.

Flash block The smallest amount of Flash ROM space that may be programmed at one time and the smallest amount of Flash space that may be protected. A Flash block holds 64 bytes.

flip-flop A device having two stable states and two input terminals (or types of input signals) each of which corresponds with one of the two states. The circuit remains in either state until it is made to change to the other state by application of the corresponding signal.

frequency The number of cycles or events per unit of time, for a periodic function.

G

gain The ratio of output current, voltage, or power to input current, voltage, or power, respectively. Gain is usually expressed in dB.

gate

1. A device having one output channel and one or more input channels, such that the output channel state is completely determined by the input channel states, except during switching transients.
2. One of many types of combinational logic elements having at least two inputs (for example, AND, OR, NAND, and NOR (also see ***Boolean Algebra***)).

ground

1. The electrical neutral line having the same potential as the surrounding earth.
2. The negative side of DC power supply.
3. The reference point for an electrical system.
4. The conducting paths between an electric circuit or equipment and the earth, or some conducting body serving in place of the earth.

H

hardware A comprehensive term for all of the physical parts of a computer or embedded system, as distinguished from the data it contains or operates on, and the software that provides instructions for the hardware to accomplish tasks.

hardware reset A reset that is caused by a circuit, such as a POR, watchdog reset, or external reset. A hardware reset restores the state of the device as it was when it was first powered up. Therefore, all registers are set to the POR value as indicated in register tables throughout this document.

OBSOLETE

hexidecimal A base 16 numeral system (often abbreviated and called hex), usually written using the symbols 0-9 and A-F. It is a useful system in computers because there is an easy mapping from four bits to a single hex digit. Thus, one can represent every byte as two consecutive hexadecimal digits. Compare the binary, hex, and decimal representations:

bin	=	hex	=	dec
0000b	=	0x0	=	0
0001b	=	0x1	=	1
0010b	=	0x2	=	2
...				
1001b	=	0x9	=	9
1010b	=	0xA	=	10
1011b	=	0xB	=	11
...				
1111b	=	0xF	=	15

So the decimal numeral 79 whose binary representation is 0100 1111b can be written as 4Fh in hexadecimal (0x4F).

high time The amount of time the signal has a value of '1' in one period, for a periodic digital signal.

I

I2C A two-wire serial computer bus by Phillips Semiconductors. I^2C is an Inter-Integrated Circuit. It is used to connect low-speed peripherals in an embedded system. The original system was created in the early 1980s as a battery control interface, but it was later used as a simple internal bus system for building control electronics. I^2C uses only two bi-directional pins, clock and data, both running at +5V and pulled high with resistors. The bus operates at 100 kbps in standard mode and 400 kbps fast mode. As of October 1st, 2006, Philips Semiconductors has a new trade name - NXP Semiconductors.

ICE The in-circuit emulator that allows users to test the project in a hardware environment, while viewing the debugging device activity in a software environment (PSoC Designer).

idle state A condition that exists whenever user messages are not being transmitted, but the service is immediately available for use.

impedance

1. The resistance to the flow of current caused by resistive, capacitive, or inductive devices in a circuit.
2. The total passive opposition offered to the flow of electric current. Note the impedance is determined by the particular combination of resistance, inductive reactance, and capacitive reactance in a given circuit.

input A point that accepts data, in a device, process, or channel.

input/output (I/O) A device that introduces data into or extracts data from a system.

instruction An expression that specifies one operation and identifies its operands, if any, in a programming language such as C or assembly.

integrated circuit (IC) A device in which components such as resistors, capacitors, diodes, and ***transistors*** are formed on the surface of a single piece of semiconductor.

interface The means by which two systems or devices are connected and interact with each other.

OBSOLETE

interrupt A suspension of a process, such as the execution of a computer program, caused by an event external to that process, and performed in such a way that the process can be resumed.

interrupt service routine (ISR) A block of code that normal code execution is diverted to when the M8C receives a hardware interrupt. Many interrupt sources may each exist with its own priority and individual ISR code block. Each ISR code block ends with the RETI instruction, returning the device to the point in the program where it left normal program execution.

J

jitter

1. A misplacement of the timing of a transition from its ideal position. A typical form of corruption that occurs on serial data streams.
2. The abrupt and unwanted variations of one or more signal characteristics, such as the interval between successive pulses, the amplitude of successive cycles, or the frequency or phase of successive cycles.

K

keeper A circuit that holds a signal to the last driven value, even when the signal becomes un-driven.

L

latency The time or delay that it takes for a signal to pass through a given circuit or network.

least significant bit (LSb) The binary digit, or bit, in a binary number that represents the least significant value (typically the right-hand bit). The bit versus byte distinction is made by using a lower case “b” for bit in LSb.

least significant byte (LSB) The byte in a multi-byte word that represents the least significant values (typically the right-hand byte). The byte versus bit distinction is made by using an upper case “B” for byte in LSB.

Linear Feedback Shift Register (LFSR) A shift register whose data input is generated as an ***XOR*** of two or more elements in the register chain.

load The electrical demand of a process expressed as power (watts), current (amps), or resistance (ohms).

logic function A mathematical function that performs a digital operation on digital data and returns a digital value.

lookup table (LUT) A logic block that implements several logic functions. The logic function is selected by means of select lines and is applied to the inputs of the block. For example: A 2 input LUT with 4 select lines can be used to perform any one of 16 logic functions on the two inputs resulting in a single logic output. The LUT is a combinational device; therefore, the input/output relationship is continuous, that is, not sampled.

low time The amount of time the signal has a value of ‘0’ in one period, for a periodic digital signal.

low voltage detect (LVD) A circuit that senses Vdd and provides an interrupt to the system when Vdd falls below a selected threshold.

OBSOLETE

M

M8C An 8-bit Harvard Architecture microprocessor. The microprocessor coordinates all activity inside a PowerPSoC by interfacing to the Flash, SRAM, and register space.

macro A programming language macro is an abstraction, whereby a certain textual pattern is replaced according to a defined set of rules. The interpreter or compiler automatically replaces the macro instance with the macro contents when an instance of the macro is encountered. Therefore, if a macro is used 5 times and the macro definition required 10 bytes of code space, 50 bytes of code space will be needed in total.

mask
1. To obscure, hide, or otherwise prevent information from being derived from a signal. It is usually the result of interaction with another signal, such as noise, static, jamming, or other forms of interference.
2. A pattern of bits that can be used to retain or suppress segments of another pattern of bits, in computing and data processing systems.

master device A device that controls the timing for data exchanges between two devices. Or when devices are cascaded in width, the master device is the one that controls the timing for data exchanges between the cascaded devices and an external interface. The controlled device is called the ***slave device***.

microcontroller An integrated circuit chip that is designed primarily for control systems and products. In addition to a CPU, a microcontroller typically includes memory, timing circuits, and I/O circuitry. The reason for this is to permit the realization of a controller with a minimal quantity of chips, thus achieving maximal possible miniaturization. This in turn, will reduce the volume and the cost of the controller. The microcontroller is normally not used for general-purpose computation as is a microprocessor.

mixed signal The reference to a circuit containing both analog and digital techniques and components.

mnemonic A tool intended to assist the memory. Mnemonics rely on not only repetition to remember facts, but also on creating associations between easy-to-remember constructs and lists of data. A two to four character string representing a microprocessor instruction.

mode A distinct method of operation for software or hardware. For example, the Digital PSoC block may be in either counter mode or timer mode.

modulation A range of techniques for encoding information on a carrier signal, typically a sine-wave signal. A device that performs modulation is known as a modulator.

Modulator A device that imposes a signal on a carrier.

MOS An acronym for metal-oxide semiconductor.

most significant bit (MSb) The binary digit, or bit, in a binary number that represents the most significant value (typically the left-hand bit). The bit versus byte distinction is made by using a lower case “b” for bit in MSb.

most significant byte (MSB) The byte in a multi-byte word that represents the most significant values (typically the left-hand byte). The byte versus bit distinction is made by using an upper case “B” for byte in MSB.

multiplexer (mux)
1. A logic function that uses a binary value, or address, to select between a number of inputs and conveys the data from the selected input to the output.
2. A technique which allows different input (or output) signals to use the same lines at different times, controlled by an external signal. Multiplexing is used to save on wiring and I/O ports.

OBSOLETE

N

NAND See ***Boolean Algebra***.

negative edge A transition from a logic 1 to a logic 0. Also known as a falling edge.

net The routing between devices.

nibble A group of four bits, which is one-half of a byte.

noise 1. A disturbance that affects a signal and that may distort the information carried by the signal.
2. The random variations of one or more characteristics of any entity such as voltage, current, or data.

NOR See ***Boolean Algebra***.

NOT See ***Boolean Algebra***.

O

OR See ***Boolean Algebra***.

oscillator A circuit that may be crystal controlled and is used to generate a clock frequency.

output The electrical signal or signals which are produced by an analog or digital block.

P

parallel The means of communication in which digital data is sent multiple bits at a time, with each simultaneous bit being sent over a separate line.

parameter Characteristics for a given block that have either been characterized or may be defined by the designer.

parameter block A location in memory where parameters for the SSC instruction are placed prior to execution.

parity A technique for testing transmitting data. Typically, a binary digit is added to the data to make the sum of all the digits of the binary data either always even (even parity) or always odd (odd parity).

path 1. The logical sequence of instructions executed by a computer.
2. The flow of an electrical signal through a circuit.

pending interrupts An interrupt that has been triggered but has not been serviced, either because the processor is busy servicing another interrupt or global interrupts are disabled.

phase The relationship between two signals, usually the same frequency, that determines the delay between them. This delay between signals is either measured by time or angle (degrees).

pin A terminal on a hardware component. Also called lead.

OBSOLETE

pinouts	The pin number assignment: the relation between the logical inputs and outputs of the PowerPSoC device and their physical counterparts in the printed circuit board (PCB) package. Pinouts will involve pin numbers as a link between schematic and PCB design (both being computer generated files) and may also involve pin names.
port	A group of pins, usually eight.
positive edge	A transition from a logic 0 to a logic 1. Also known as a rising edge.
posted interrupts	An interrupt that has been detected by the hardware but may or may not be enabled by its mask bit. Posted interrupts that are not masked become pending interrupts.
Power On Reset (POR)	A circuit that forces the PowerPSoC device to reset when the voltage is below a pre-set level. This is one type of ***hardware reset***.
program counter	The instruction pointer (also called the program counter) is a register in a computer processor that indicates where in memory the CPU is executing instructions. Depending on the details of the particular machine, it holds either the address of the instruction being executed, or the address of the next instruction to be executed.
protocol	A set of rules. Particularly the rules that govern networked communications.
PSoC	Cypress Semiconductor's Programmable System-on-Chip (PSoC). PSoC® is a registered trademark and Programmable System-on-Chip™ is a trademark of Cypress.
PSoC blocks	*See* ***analog blocks*** and ***digital blocks***.
PSoC Designer	The software for Cypress' Programmable System-on-Chip technology.
pulse	A rapid change in some characteristic of a signal (for example, phase or frequency), from a baseline value to a higher or lower value, followed by a rapid return to the baseline value.
pulse width modulator (PWM)	An output in the form of duty cycle which varies as a function of the applied measurand.

R

RAM	An acronym for random access memory. A data-storage device from which data can be read out and new data can be written in.
register	A storage device with a specific capacity, such as a bit or byte.
reset	A means of bringing a system back to a know state. See ***hardware reset*** and ***software reset***.
resistance	The resistance to the flow of electric current measured in ohms for a conductor.
revision ID	A unique identifier of the PowerPSoC device.
ripple divider	An asynchronous ripple counter constructed of flip-flops. The clock is fed to the first stage of the counter. An n-bit binary counter consisting of n flip-flops that can count in binary from 0 to 2^n - 1.
rising edge	*See* ***positive edge***.

OBSOLETE

ROM An acronym for read only memory. A data-storage device from which data can be read out, but new data cannot be written in.

routine A block of code, called by another block of code, that may have some general or frequent use.

routing Physically connecting objects in a design according to design rules set in the reference library.

runt pulses In digital circuits, narrow pulses that, due to non-zero rise and fall times of the signal, do not reach a valid high or low level. For example, a runt pulse may occur when switching between asynchronous clocks or as the result of a race condition in which a signal takes two separate paths through a circuit. These race conditions may have different delays and are then recombined to form a glitch or when the output of a flip-flop becomes metastable.

S

sampling The process of converting an analog signal into a series of digital values or reversed.

schematic A diagram, drawing, or sketch that details the elements of a system, such as the elements of an electrical circuit or the elements of a logic diagram for a computer.

seed value An initial value loaded into a linear feedback shift register or random number generator.

serial
1. Pertaining to a process in which all events occur one after the other.
2. Pertaining to the sequential or consecutive occurrence of two or more related activities in a single device or channel.

set To force a bit/register to a value of logic 1.

settling time The time it takes for an output signal or value to stabilize after the input has changed from one value to another.

shift The movement of each bit in a word one position to either the left or right. For example, if the hex value 0x24 is shifted one place to the left, it becomes 0x48. If the hex value 0x24 is shifted one place to the right, it becomes 0x12.

shift register A memory storage device that sequentially shifts a word either left or right to output a stream of serial data.

sign bit The most significant binary digit, or bit, of a signed binary number. If set to a logic 1, this bit represents a negative quantity.

signal A detectable transmitted energy that can be used to carry information. As applied to electronics, any transmitted electrical impulse.

silicon ID A unique identifier of the PowerPSoC silicon.

skew The difference in arrival time of bits transmitted at the same time, in parallel transmission.

slave device A device that allows another device to control the timing for data exchanges between two devices. Or when devices are cascaded in width, the slave device is the one that allows another device to control the timing of data exchanges between the cascaded devices and an external interface. The controlling device is called the master device.

OBSOLETE

software A set of computer programs, procedures, and associated documentation concerned with the operation of a data processing system (for example, compilers, library routines, manuals, and circuit diagrams). Software is often written first as source code, and then converted to a binary format that is specific to the device on which the code will be executed.

software reset A partial reset executed by software to bring part of the system back to a known state. A software reset will restore the M8C to a know state but not PSoC blocks, systems, peripherals, or registers. For a software reset, the CPU registers (CPU_A, CPU_F, CPU_PC, CPU_SP, and CPU_X) are set to 0x00. Therefore, code execution will begin at Flash address 0x0000.

SRAM An acronym for static random access memory. A memory device allowing users to store and retrieve data at a high rate of speed. The term static is used because, once a value has been loaded into an SRAM cell, it will remain unchanged until it is explicitly altered or until power is removed from the device.

SROM An acronym for supervisory read only memory. The SROM holds code that is used to boot the device, calibrate circuitry, and perform Flash operations. The functions of the SROM may be accessed in normal user code, operating from Flash.

stack A stack is a data structure that works on the principle of Last In First Out (LIFO). This means that the last item put on the stack is the first item that can be taken off.

stack pointer A stack may be represented in a computer's inside blocks of memory cells, with the bottom at a fixed location and a variable stack pointer to the current top cell.

state machine The actual implementation (in hardware or software) of a function that can be considered to consist of a set of states through which it sequences.

sticky A bit in a register that maintains its value past the time of the event that caused its transition, has passed.

stop bit A signal following a character or block that prepares the receiving device to receive the next character or block.

switching The controlling or routing of signals in circuits to execute logical or arithmetic operations, or to transmit data between specific points in a network.

Switch phasing The clock that controls a given switch, PHI1 or PHI2, in respect to the switch capacitor (SC) blocks. The PSoC SC blocks have two groups of switches. One group of these switches is normally closed during PHI1 and open during PHI2. The other group is open during PHI1 and closed during PHI2. These switches can be controlled in the normal operation, or in reverse mode if the PHI1 and PHI2 clocks are reversed.

synchronous

1. A signal whose data is not acknowledged or acted upon until the next active edge of a clock signal.
2. A system whose operation is synchronized by a clock signal.

T

tap The connection between two blocks of a device created by connecting several blocks/components in a series, such as a shift register or resistive voltage divider.

terminal count The state at which a counter is counted down to zero.

OBSOLETE

threshold The minimum value of a signal that can be detected by the system or sensor under consideration.

transistors The transistor is a solid-state semiconductor device used for amplification and switching, and has three terminals: a small current or voltage applied to one terminal controls the current through the other two. It is the key component in all modern electronics. In digital circuits, transistors are used as very fast electrical switches, and arrangements of transistors can function as logic gates, RAM-type memory, and other devices. In analog circuits, transistors are essentially used as amplifiers.

tri-state A function whose output can adopt three states: 0, 1, and Z (high-impedance). The function does not drive any value in the Z state and, in many respects, may be considered to be disconnected from the rest of the circuit, allowing another output to drive the same ***net***.

U

UART A UART or universal asynchronous receiver-transmitter translates between parallel bits of data and serial bits.

user The person using the PowerPSoC device and reading this manual.

user modules Pre-build, pre-tested hardware/firmware peripheral functions that take care of managing and configuring the lower level Analog and Digital PSoC Blocks. User Modules also provide high level ***API (Application Programming Interface)*** for the peripheral function.

user space The bank 0 space of the register map. The registers in this bank are more likely to be modified during normal program execution and not just during initialization. Registers in bank 1 are most likely to be modified only during the initialization phase of the program.

V

Vdd A name for a power net meaning "voltage drain." The most positive power supply signal. Usually 5 or 3.3 volts.

volatile Not guaranteed to stay the same value or level when not in scope.

Vss A name for a power net meaning "voltage source." The most negative power supply signal.

OBSOLETE

W

watchdog timer A timer that must be serviced periodically. If it is not serviced, the CPU will reset after a specified period of time.

waveform The representation of a signal as a plot of amplitude versus time.

X

XOR See ***Boolean Algebra***.

OBSOLETE

OBSOLETE

Index

Numerics

32 kHz clock selection 91, 93
32k Select bit 505
56-pin global interconnect 110

A

ABF_CR0 register 88, 187, 481
ABUFxEN bits 88
    in ABF_CR0 register 481
ACap bits
    in ASCxxCR0 register 409
    in ASDxxCR0 register 413
ACBxxCR0 register 197, 400
ACBxxCR1 register 197, 402
ACBxxCR2 register 198, 404
ACBxxCR3 register 195, 399
ACExxCR2 register 405
ACIx bits 388
ACK bit
    in I2C_SCR register 441
ACLK0 bits 480
ACLK1 bits 480
ACLKxR bits 489
ACMux bits 410
ACol0Mux bit 389
AColxMux bits 88
    in ABF_CR0 register 481
acronyms 29
Address bit
    in I2C_SCR register 441
address spaces, CPU core 43
addressing modes, M8C 47
ADI, *See* array digital interconnect
AGNDBYP bit 513
AINT bits 391
ALIGN bits 405
ALT_CR0 register 176, 486
ALT_CR1 register 176, 488
AMD_CR0 register 174, 483
AMD_CR1 register 175, 485
AMODx bits 483, 485
amplifiers, instruction 195
AMux bits
    in ASDxxCR1 register 414
AMux connections 181
AMUX_CFG register 389
AMUX_CLK register 492
AMUXCFG register 268, 269
AMX_IN register 187, 388
Analog 0 bit
    in INT_CLR0 register 446
    in INT_MSK0 register 454
Analog 1 bit
    in INT_CLR0 register 446
    in INT_MSK0 register 454
analog array 177
    AMux connections 181
    analog comparator bus 183
    architecture 177
    BMux SC/SD connections 183
    CMux connections 182
    NMux connections 178
    PMux connections 179
    RBotMux connections 180
    temperature sensing 183
analog array power control bits 190
analog blocks, defining 162
analog column clock generation 166
analog comparator bus interface 166, 183
analog data bus interface 166
analog input configuration 185
    2 column configuration 186
    architecture 185
    register definitions 187
analog input in IO analog multiplexer 267
analog input, GPIO 80
analog interface 165
    architecture 165
    column clock generation 166
    comparator bus interface 166
    data bus interface 166
    decimator interface 168
    incremental ADC interface 168
    LUT function 166
    modulator interface 168
    register definitions 170
    SAR hardware acceleration 168
    synchronization interface 168
analog modulator interface 168
analog MUX 301
    architecture 301
    register definitions 303
analog mux bus 266
analog output drivers 87
    architecture 87
    register definitions 88

OBSOLETE

analog reference 189
architecture 189
register definitions 190
analog synchronization interface 168
analog system
architecture 161
characteristics 161
defining analog blocks 162
functionality 162
overview 161
register naming conventions 163
register summary 163
AnalogBus bit
in ACBxxCR1 register 402
in ASCxxCR2 register 411
in ASDxxCR2 register 415
application description
current sense amplifier 284
digital-to-analog converter 290
gate driver 346
hysteretic controller 317
power FET 352
switching regulator 356
application description of the power peripherals 276
architecture
analog system 21, 161
digital system 21, 105
power peripherals 272
PowerPSoC 18
PSoC core 21, 39
system resources 22, 209
top level 18
ARefMux bits
in ASCxxCR3 register 412
in ASDxxCR3 register 416
ARF_CR register 190, 390
array digital interconnect 113
architecture 113
ASCxxCR0 register 203, 409
ASCxxCR1 register 204, 410
ASCxxCR2 register 204, 411
ASCxxCR3 register 205, 412
ASDxxCR0 register 206, 413
ASDxxCR1 register 207, 414
ASDxxCR2 register 207, 415
ASDxxCR3 register 208, 416
ASign bit
in ASCxxCR0 register 409
in ASDxxCR0 register 413
ASY_CR register 171, 392
asynchronous receiver function 131
asynchronous transmitter function 131
AutoZero bit
in ASCxxCR2 register 411
in ASDxxCR2 register 415
AUX IO Select bits 476
AUXCLK bits 476
AUXEN bit 476

B

bank 0 registers 363
register mapping table 358
bank 1 registers 468
register mapping table 359
basic paging in RAM paging 63
BCap bits 410
in ASDxxCR1 register 414
BCEN bit 472
BCol1Mux bit 389
BCSEL bits 430
BDG_TR register 255, 513
Bias Trim bits 512
BMux SC/SD connections 183
BMuxSC bits
in ASCxxCR3 register 412
BMuxSD bit
in ASDxxCR3 register 416
BSW bit
in ASDxxCR3 register 416
Bus Busy bit 444
Bus Error bit
in I2C_SCR register 441
Bus Error IE bit 440
BW bit 478
Bypass bit 88
in ABF_CR0 register 481
Byte Complete bit
in I2C_SCR register 442

C

Calibrate0 function in SROM 57
Calibrate1 function in SROM 57
capacitive sensing in IO analog multiplexer 266
Capture Int bit 377
Carry bit 69, 464
Cautions and Warnings 26
CCap bits
in ASCxxCR2 register 411
in ASDxxCR2 register 415
CENTRE_INT_LOC bit 405
chaining signals in digital blocks 125
channel bonding 275
characteristics of the PowerPSoC device 23
characteristics of the PSoC device
in system resources 209
in the analog system 161
in the digital system 105
CHBOND_CR register 373
Checksum function in SROM 57
circuit operation
DIM function 315
main loop function 314
trip function 316
CLatch bit 404
CLK_CR0 register 173, 479
CLK_CR1 register 174, 480
CLK_CR2 register 176, 489

OBSOLETE

CLK1X bits 393
CLK24M bit 502
CLK32K bit 502
CLKSYNC bits 492
Clock Input bits 475
Clock Rate bits 440
clock, external digital clock 215
  clock doubler 215
  switch operation 215
clocking
  in SROM 61
  rates for I2C 241
ClockPhase bit
  in ASCxxCR0 register 409
  in ASDxxCR0 register 413
clocks digital, *See* digital clocks
CMOUT bit 399
CMP_CR0 register 170, 391
CMP_CR1 register 172, 393
CMP_GO_EN register 175, 484
CMP10 bit
  in INT_CLR2 register 450
  in INT_MSK2 register 453
CMP11 bit
  in INT_CLR2 register 450
  in INT_MSK2 register 453
CMP12 bit
  in INT_CLR2 register 450
  in INT_MSK2 register 453
CMP13 bit
  in INT_CLR2 register 449
  in INT_MSK2 register 453
CMP8 bit
  in INT_CLR2 register 450
  in INT_MSK2 register 453
CMP9 bit
  in INT_CLR2 register 450
  in INT_MSK2 register 453
CMPBNK10_CR register 299
CMPBNK11_CR register 299
CMPBNK12_CR register 299
CMPBNK13_CR register 299
CMPBNK8_CR register 299
CMPBNK9_CR register 299
CMPBNKx_CR register 299
CMPCH0_CR register 298
CMPCH2_CR register 298
CMPCH4_CR register 298
CMPCH6_CR register 298
CMPCHx_CR register 298
CMux connections 182
COMP bits 391
comparator 295
  architecture 295
  register definitions 298
  timing diagrams 300
CompBus bit
  in ACBxxCR1 register 402
  in ASCxxCR2 register 411
  in ASDxxCR2 register 415
CompCap bit 404
COMPTYPE bit 405
configuration
  analog input 185
  decimator 231
  multiply accumulate 225
configuration registers in digital blocks
  DxBxxFN registers 140
  DxBxxIN register 141
  DxBxxOU register 141
continuous time block 193
  architecture 193
  register definitions 195
conventions, documentation
  acronyms 29
  numeric naming 28
  register conventions 28, 357, 362
  register names 362
  units of measure 28
core, *See* PSoC core
counter for digital blocks
  functionality 126
  register definitions 135
  timing 145
CPhase bit 404
CPU core 43
  address spaces 43
  addressing modes 47
  instruction formats 46
  instruction set summary 44–45
  internal M8C registers 43
  register definitions 52
CPU Sleep bits 505
CPU speed settings 98
CPU_F register 52, 69, 78, 464
CPU_SCR0 register 97, 259, 467
CPU_SCR1 register 60, 89, 96, 258, 466
CRCPRS for digital blocks
  functionality 127
  register definitions 136
  timing 148
crosspoint switch in IO analog multiplexer 267
CSA, *See* current sense amplifier
CSA0_CR register 286
CSA1_CR register 286
CSA2_CR register 286
CSA3_CR register 286
CSAx_CR register 286, 478
CT, *See* continuous time block
CUR_PP register 66, 435
current page pointer in RAM paging 64
current sense amplifier 283
  application description 284
  architecture 284
  register definitions 286

D

DAC_CR register 269, 514
DAC_D register 268, 465

OBSOLETE

DACDATA bits 465
data and control registers in digital blocks
DxBxxCR0 registers 138
DxBxxDRx registers 134
Data bits
in DxBxxDR0 register 374
in DxBxxDR1 register 375
in DxBxxDR2 register 376
in I2C_DR register 443
in MACx_CL0/ACCx_DR3 register 426
in MACx_CL1/ACCx_DR2 register 427
in MACx_X/ACCx_DR1 register 424
in MACx_Y/ACCx_DR0 register 425
in MULx_DH register 422
in MULx_DL register 423
in MULx_X register 420
in MULx_Y register 421
in PRTxDR register 363
in TMP_DRx register 398, 490
Data Format bit 510
Data High Byte bits 458
Data Input bits 474
Data Invert bit 472
Data Low Byte bits 459
Data Out Shift bits 510
DBB0x bit
in INT_CLR1 register 448
in INT_MSK1 register 455
DBB1x bit
in INT_CLR1 register 447, 448
in INT_MSK1 register 455
DCB0x bit
in INT_CLR1 register 448
in INT_MSK1 register 455
DCB1x bit
in INT_CLR1 register 447
in INT_MSK1 register 455
DCLKSx bits
in DEC_CR0 register 461
in DEC_CR1 register 463
DCOL bits
in DEC_CR0 register 461
dead band for digital blocks
functionality 126
kill options 127
register definitions 135
timing 145
DEC_CR0 register 172, 234, 460
DEC_CR1 register 173, 234, 462
DEC_CR2 register 235, 510
DEC_DH register 233, 458
DEC_DL register 233, 459
Decimation Rate bits 510
decimator 231
architecture 231
configurations 231
register definitions 233
type 2 block 231
decimator and incremental ADC interface 168
destination instructions
direct 49
direct source direct 50
direct source immediate 49
indexed 49
indexed source immediate 50
indirect post increment 51
detailed register listing 361
development kits 27
device characteristics 23
digital blocks 123
architecture 123
asynchronous transmitter and receiver functions 131
chaining signals 125
configuration registers 140
counter function 126
CRCPRS function 127
data and control registers 133
dead band function 126
input clock resynchronization 124
input data synchronization 125
input multiplexers 124
interrupt mask registers 139
output de-multiplexers 125
register definitions 133
SPI master function 130
SPI protocol function 129
SPI slave function 130
timer function 125
timing diagrams 143
digital blocks timing diagrams
counter timing 145
CRCPRS timing 148
dead band timing 145
receiver timing 157
SPI mode timing 148
SPIM timing 149
SPIS timing 152
timer timing 143
transmitter timing 155
digital clocks 213
architecture 213
external clock 215
internal low speed oscillator 213
internal main oscillator 213
register definitions 217
system clocking signals 213
digital IO, GPIO 79
digital modulator
architecture 321
counter directions 326
dynamic and static configuration registers 335
overview 322
register definitions 328
register write synchronization 336
SYNC MODE use 339
timing diagrams 337
use of very low period values 336
digital modulator block 321
digital modulator counter directions
center alignment 327
left alignment 326
right alignment 326

OBSOLETE

digital modulator dynamic and static configuration registers
notes on dynamic registers 335
digital modulator overview
DMM mode 324
PrISM mode 323
PWM mode 322
digital modulator register
PrISM polynomial values 329
digital modulator timing
DMM timing 338
PrISM timing 338
PWM timing 338
digital MUX 305
architecture 305
GPIO 307
hysteretic channel 306
logical representation of power peripheral digital multiplexer 301, 305
register definitions 308
digital system
architecture 105
register naming conventions 106
register summary 106
digital-to-analog converter 287
application description 290
architecture 288
block overview 288
register definitions 290
timing diagrams 293
documentation
conventions 28
interpreting the analog system 161
interpreting the digital system 105
interpreting the PSoC core 40
interpreting the system resources 209
overview 17
DPWM0GCFG register 332
DPWM0PCF register 328
DPWM0PCFG register 332
DPWM0PCH register 331
DPWM0PCL register 331
DPWM0PDH register 329
DPWM0PDL register 329
DPWM0PWH register 330
DPWM0PWL register 330
DPWM1GCFG register 332
DPWM1PCF register 328
DPWM1PCFG register 332
DPWM1PCH register 331
DPWM1PCL register 331
DPWM1PDH register 329
DPWM1PDL register 329
DPWM1PWH register 330
DPWM1PWL register 330
DPWM2GCFG register 332
DPWM2PCF register 328
DPWM2PCFG register 332
DPWM2PCH register 331
DPWM2PCL register 331
DPWM2PDH register 329
DPWM2PDL register 329
DPWM2PWH register 330
DPWM2PWL register 330
DPWM3GCFG register 332
DPWM3PCF register 328
DPWM3PCFG register 332
DPWM3PCH register 331
DPWM3PCL register 331
DPWM3PDH register 329
DPWM3PDL register 329
DPWM3PWH register 330
DPWM3PWL register 330
DPWMINTFLAG register 333
DPWMINTMSK register 333
DPWMSYNC register 334
DPWMx_GCFG register 387
DPWMx_PCF register 378
DPWMx_PCH register 385
DPWMx_PCL register 386
DPWMx_PDH register 379
DPWMx_PDL register 381
DPWMx_PWH register 383
DPWMx_PWL register 384
DPWMxGCFG register 332
DPWMxPCF register 328
DPWMxPCFG register 332, 405
DPWMxPCH register 331
DPWMxPCL register 331
DPWMxPDH register 329
DPWMxPDL register 329
DPWMxPWH register 330
DPWMxPWL register 330
Drive Mode 0 bits 468
Drive Mode 1 bits 469
Drive Mode 2 bits 366
DSM_RESOLUTION bits 405
DxBxxCR0 registers 138, 377
DxBxxDR0 register 134, 374
DxBxxDR1 register 134, 375
DxBxxDR2 register 134, 376
DxBxxFN register 472
DxBxxFN registers 140
DxBxxIN register 474
DxBxxIN registers 141
DxBxxOU register 476
DxBxxOU registers 141

E

EN bit 389, 417, 499
ENABLE bit 478
Enable bit
in DxBxxCR0 register 377
ENABLE bit in DAC_CR register 514
ENABLE bits in MUX_CRx registers 500
Enable Master bit 440

OBSOLETE

Enable Slave bit 440
End Single bit 472
ENSWINT bit 76
in INT_MSK3 register 452
EraseAll function in SROM 57
EraseBlock function in SROM 56
EXGAIN bit 399
EXTCLKEN bit 507
external digital clock 215
external reset 260

F

FCap bit
in ASCxxCR0 register 409
in ASDxxCR0 register 413
Flash
memory organization 55
tables 57
Freq Trim bits 512
FSW0 bit
in ASCxxCR3 register 412
in ASDxxCR3 register 416
FSW1 bit
in ASCxxCR3 register 412
in ASDxxCR3 register 416
Function bits 473
functionality, analog system 162

G

Gain bit 400
gate driver 345
application description 346
architecture 346
register definitions 347
timing diagrams 348
GDI_E_IN register 111, 496
GDI_E_OU register 112, 498
GDI_O_IN register 111, 495
GDI_O_OU register 112, 497
GDI, *See* global digital interconnect
GDRV0_CR register 347
GDRV1_CR register 347
GDRV2_CR register 347
GDRV3_CR register 347
GDRVx_CR register 347
general purpose IO 79
analog input 80
architecture 79
block interrupts 82
digital IO 79
drive modes 85
global IO 80
interrupt modes 86
register definitions 83
GIE bit 69, 464
GIENOUTx bits
in GDI_E_IN register 496
GIES bit
in CPU_SCR0 register 467
GIONOUTx bits
in GDI_O_IN register 495
GLEN bit 387
global digital interconnect 109
56-pin global interconnect 110
architecture 109
register definitions 111
global IO, GPIO 80
Global Select bits 365
GOE0EN bit 433
GOE1EN bit 433
GOE2EN bit 434
GOE3EN bit 434
GOE4EN bit 433
GOE5EN bit 433
GOE6EN bit 434
GOE7EN bit 434
GOEUTINx bits
in GDI_E_OU register 498
GOO0EN bit 433
GOO1EN bit 433
GOO2EN bit 434
GOO3EN bit 434
GOO4EN bit 433
GOO5EN bit 433
GOO6EN bit 434
GOO7EN bit 434
GOOUTINx bits
in GDI_O_OU register 497
GOOx bits 484
GPIO bit
in INT_CLR0 register 445
in INT_MSK0 register 454
GPIO block interrupts 82
GPIO, *See* general purpose IO

H

HBE bit 390
help, getting
development kits 27
support 27
HYSCTLR0_CR register 318
HYSCTLR1_CR register 318
HYSCTLR2_CR register 318
HYSCTLR3_CR register 318
HYSCTLRx_CR register 318, 499
HYST_CREG bit 499
HYST_DIM0 bits 367
HYST_DIM1 bits 367
HYST_DIM2 bits 368
HYST_DIM3 bits 368
HYST_TRIP0 bits 369
HYST_TRIP1 bits 369
HYST_TRIP2 bits 370
HYST_TRIP3 bits 370

OBSOLETE

hysteretic controller 313
application description 317
architecture 314
circuit operation 314
circuit operation, application 317
register definitions 318
timing diagrams 319

I

I2C bit 75, 76
in INT_CLR3 register 451
in INT_MSK3 register 452
I2C system resource 237
application description 238
architecture 237
basic data transfer 237
basic IO timing 248
clock generation timing 247
clock rates 241
master clock synchronization 253
master lost arbitration timing 252
master operation 239
master restart timing 251
master stop timing 251
master timing 249
master/slave stall timing 252
register definitions 240
slave operation 238
status timing 248
I2C_CFG register 240, 440
I2C_DR register 244, 443
I2C_MSCR register 245, 444
I2C_SCR register 242, 441
ICLKSx bits
in DEC_CR0 register 460
in DEC_CR1 register 462
IDEC bit
in DEC_CR1 register 462
IDX_PP register 67, 437
IGEN bits
in DEC_CR0 register 460
ILO_TR register 91, 99, 512
ILO, *See* internal low speed oscillator
IMO_TR register 90, 511
IMO, *See* internal main oscillator
incremental ADC interface 168
index memory page pointer in RAM paging 65
input for digital blocks
clock resynchronization 124
data synchronization 125
multiplexers 124
INSAMP bit 399
instruction amplifiers 195
instruction formats
1-byte instructions 46
2-byte instructions 46
3-byte instructions 47
instruction set summary 44–45
INT_CLR0 register 74, 217, 445
INT_CLR1 register 74, 447
INT_CLR2 register 74, 449
INT_CLR3 register 74, 451
INT_MSK0 register 76, 95, 217, 454
INT_MSK1 register 76, 139, 455
INT_MSK2 register 76, 453
INT_MSK3 register 76, 452
INT_VC register 78, 456
INTCAP bits 389
internal low speed oscillator 91
architecture 91
digital clock description 213
register definitions 91
internal M8C registers 43
internal main oscillator 89
application description 89
architecture 89
digital clock description 213
register definitions 89
internal voltage reference 255
architecture 255
register definitions 255
Interrupt Control 0 bits 470
Interrupt Control 1 bits 471
interrupt controller 71
application description 73
architecture 71
interrupt table 73
latency and priority 72
posted versus pending interrupts 72
register definitions 74
Interrupt Enables bits 364
interrupt mask registers in digital blocks
INT_MSK1 register 139
interrupt table for PSoC devices 73
interrupts in RAM paging 64
INTTYPE bit 405
IO analog multiplexer 265
analog input 267
application description 266
architecture 265
capacitive sensing 266
crosspoint switch 267
register definitions 268
IRAMDIS bit 60, 466
IRANGE bit 514
IRESS bit 60, 466
ISx bits 430

L

lookup table (LUT) function 166
Lost Arb bit
in I2C_SCR register 441
LPCMPEN bit 399
LRB bit
in I2C_SCR register 441
LUT0 bits 431
LUT1 bits 431
LUT2 bits 432

OBSOLETE

LUT3 bits 432
LUTx bits 486, 488
LVD bit 509
LVDTBEN bit 508

M

M8C, *See* CPU core
MAC, *See* multiply accumulate
MACx_CL0/ACCx_DR3 register 229, 426
MACx_CL1/ACCx_DR2 register 229, 427
MACx_X/ACCx_DR1 register 228, 424
MACx_Y/ACCx_DR0 register 229, 425
mapping tables, registers 357
Master Mode bit 444
master operation, I2C 239
measurement units 28
MODE bit 417
MODE bits 387
Mode bits 472, 510
MONOSHOT bits 499
multiply accumulate 225
    accumulation after multiplication 226
    architecture 225
    configurations 225
    multiplication with no accumulation 226
    register definitions 226
MULx_DH register 227, 422
MULx_DL register 228, 423
MULx_X register 227, 420
MULx_Y register 227, 421
MUX_CH0_SEL bits 373
MUX_CH1_SEL bits 373
MUX_CH2_SEL bits 373
MUX_CH3_SEL bits 373
MUX_CRx register 269, 500
MUXCLK bits 389
MuxClkGE bit 514
MVI instructions in RAM paging 64
MVR_PP register 59, 68, 438
MVW_PP register 60, 68, 439

N

naming conventions of registers 362
NMux bits
    in ACBxxCR1 register 402
NMux connections 178
No Buzz bit 505
numeric naming conventions 28

O

OSC_CR0 register 98, 221, 505
OSC_CR1 register 222, 506
OSC_CR2 register 90, 223, 507
OSC_CR3 register 220, 504
OSC_CR4 register 219, 503
OSC_GO_EN register 218, 502
OSCMODE bits 514
OUTEN bit 477
output de-multiplexers for digital blocks 125
Output Select bits 477
overviews
    analog system 161
    digital system 105
    register reference tables 357
    system resources 209

P

Page bits
    in CUR_PP register 435
    in IDX_PP register 437
    in MVR_PP register 438
    in MVW_PP register 439
    in STK_PP register 436
PAMUX_S1 register 303, 394
PAMUX_S2 register 303, 395
PAMUX_S3 register 304, 396
PAMUX_S4 register 304, 397
PC bits 385, 386
PCF bits 378
PDMUX_S1 register 308, 367
PDMUX_S2 register 309, 368
PDMUX_S3 register 309, 369
PDMUX_S4 register 310, 370
PDMUX_S5 register 311
PDMUX_S6 register 312
Pending Interrupt bits 456
Period bits 379, 381
PgMode bits 69, 464
pin information, *See* pinouts
pinouts
    56-pin part (OCD) 32, 33, 34, 36, 37
PMux bits
    in ACBxxCR1 register 403
PMux connections 179
POR and LVD 263
    architecture 263
    register definitions 264
PORLEV bits 508
PORS bit
    in CPU_SCR0 register 467
PowePSoC
    overview 18
power consumption, system resets 262
power FET 351
    application description 352
    architecture 351
    register definitions 352
    timing diagrams 352
power on reset 260
power peripherals
    application description 276
    architecture 272

OBSOLETE

channel bonding 275
register summary 279
PowerPSoC device
characteristics 23
PPOR bit 509
product upgrades 27
ProtectBlock function in SROM 56
PRTxDM0 register 85, 468
PRTxDM1 register 85, 469
PRTxDM2 register 85, 366
PRTxDR register 83, 363
PRTxGS register 83, 365
PRTxIC0 register 86, 470
PRTxIC1 register 86, 471
PRTxIE register 83, 364
PSelect bit 440
PSoC core
architecture 39
register summary 41
PW bits 383, 384
PWMHP bit
in INT_CLR2 register 449
in INT_MSK2 register 453
PWMLP bit
in INT_CLR2 register 449
in INT_MSK2 register 453
PWR bits
in ABF_CR0 register 88, 481
in ACBxxCR2 register 404
in ARF_CR register 390
in ASCxxCR3 register 412
in ASDxxCR3 register 416

R

RAM paging 63
architecture 63
basic paging 63
current page pointer 64
index memory page pointer 65
interrupts 64
MVI instructions 64
register definitions 66
stack operations 64
RBotMux bits 401
RBotMux connections 180
RDI, *See* row digital interconnect
RDI0IS register 119
RDI0LT0 register 120
RDI0LT1 register 120
RDI0RI register 117
RDI0RO0 register 121
RDI0RO1 register 121
RDI0SYN register 118
RDI1IS register 119
RDI1LT0 register 120
RDI1LT1 register 120
RDI1RI register 117
RDI1RO0 register 121
RDI1RO1 register 121
RDI1SYN register 118
RDIxIS register 430
RDIxLT0 register 120, 431
RDIxLT1 register 120, 432
RDIxRI register 428
RDIxRO0 register 121, 433
RDIxRO1 register 121, 434
RDIxSYN register 429
ReadBlock function in SROM 55
receiver for digital blocks
functionality 131
register definitions 137
timing 157
REF bits 390
register conventions 28, 362
register definitions
analog input configuration 187
analog interface 170
analog MUX 303
analog output drivers 88
analog reference 190
comparator 298
continuous time block 195
CPU core 52
current sense amplifier 286
decimator 233
digital blocks 133
digital clocks 217
digital modulator 328
digital MUX 308
digital-to-analog converter 290
gate driver 347
general purpose IO 83
global digital interconnect 111
hysteretic controller 318
I2C 240
internal low speed oscillator 91
internal main oscillator 89
internal voltage reference 255
interrupt controller 74
IO analog multiplexer 268
multiply accumulate 226
POR and LVD 264
power FET 352
RAM paging 66
row digital interconnect 117
sleep and watchdog 95
supervisory ROM 59
switched capacitor block 202
switching regulator 356
system resets 258
register mapping tables
bank 0 registers 358
register reference 357
mapping tables 358–359
registers
analog register summary 163
bank 0 registers 363

OBSOLETE

bank 1 registers 468
core register summary 41
detail of all registers 361
digital register summary 106
internal M8C registers 43
maneuvering around 361
mapping tables 357
power peripherals register summary 279
PrISM polynomial values 380, 382
system resources register summary 210
RES_WDT register 95, 457
Restart Gen bit 444
RIx bits 428
RIxSYN bits 429
row digital interconnect 115
architecture 115
register definitions 117
timing diagram 121
RTapMux bits 400
RTopMux bit 400

S

S1 bits 394
S10 bits 396
S11 bits 396
S12 bit 397
S13 bit 397
S14 bit 397
S15 bit 397
S16 bits 397
S2 bits 394
S3 bits 394
S4 bits 395
S5 bits 395
S6 bits 395
S7 bits 395
S8 bits 396
S9 bits 396
SAR hardware acceleration 168
SARCNT bits 392
SARCOL bits 392
SARSIGN bit 392
SC type C control registers 203
SC type D control registers 206
SC, *See also* switched capacitor block
SELx bits 484
SHDIS bit 480
Sinc2 function 232
slave operation, I2C 238
sleep and watchdog 93
32 kHz clock selection 93
application description 94
architecture 93
CPU speed settings 98
power consumption 103
register definitions 95
sleep interval selections 98
sleep timer 93
timing diagrams 100
sleep and watchdog timing
bandgap refresh 102
sleep sequence 100
wake up sequence 101
watchdog timer 102
Sleep bit
in CPU_SCR0 register 467
in INT_CLR0 register 445
in INT_MSK0 register 454
Sleep bits 505
sleep interval selections 98
sleep timer 93
SLPINT bit 502
source instructions
direct 48
immediate 47
indexed 48
indirect post increment 51
SPI for digital blocks
master function 130
mode timing 148
protocol function 129
slave function 130
SPI master for digital blocks
register definitions 136
SPI slave for digital blocks
register definitions 137
SPIM timing for digital blocks 149
SPIS timing for digital blocks 152
SplitMux bit 514
SREG_TST register 356
SROM, *See* supervisory ROM
stack operations in RAM paging 64
Start Gen bit 444
started, getting 27
STK_PP register 59, 67, 436
STOP bit
in CPU_SCR0 register 467
Stop IE bit 440
Stop Status bit
in I2C_SCR register 441
summary of registers
analog system 163
digital system 106
mapping tables 357
power peripherals 279
PSoC core 41
system resources 210
supervisory ROM 53
architecture 53
Calibrate0 function 57
Calibrate1 function 57
Checksum function 57
clocking 61
EraseAll function 57
EraseBlock function 56
function descriptions 54
KEY function variables 53
list of SROM functions 53
ProtectBlock function 56

OBSOLETE

ReadBlock function 55
register definitions 59
return code feature 54
SWBootReset function 54
TableRead function 57
WriteBlock function 56
SWBootReset function in SROM 54
switched capacitor block 199
application description 201
architecture 199
register definitions 202
SC type C control registers 203
SC type D control registers 206
switching regulator 353
application description 356
architecture 353
power modes 354
register definitions 356
switching regulator power modes
active mode 354
power down mode 354
SYNCEN bit 392
SYSCLK bit 502
SYSCLKX2 bit 502
SYSCLKX2DIS bit 507
system resets 257
architecture 257
functional details 262
power consumption 262
power on reset 260
register definitions 258
timing diagrams 260
watchdog timer reset 260
system resources
architecture 209
characteristics 209
overview 22, 209
register summary 210

T

TableRead function in SROM 57
TC bits 513
TC Pulse Width bit 377
temperature sensing in analog 183
TestMux bits 404
timer for digital blocks
functionality 125
register definitions 134
timing 143
timing diagrams
comparator 300
digital blocks 143
digital modulator 337
digital-to-analog converter 293
gate driver 348
hysteretic controller 319
I2C 247
power FET 352
row digital interconnect 121
system resets 260
TMP_DRx register 66, 398, 490
TMUXEN bit 404
Transmit bit
in I2C_SCR register 441
transmitter for digital blocks
functionality 131
register definition 137
timing 155
Trim bits 511
type 2 decimator block 231

U

UART function 123
units of measure 28
upgrades 27
UVLO bit
in INT_CLR0 register 446
in INT_MSK0 register 454

V

V bits 513
V Monitor bit
in INT_CLR0 register 446
in INT_MSK0 register 454
VC1 Divider bits 506
VC2 Divider bits 506
VC3 bit
in INT_CLR0 register 445
in INT_MSK0 register 454
VC3 Divider bits 504
VC3 Input Select bits 503
VCx bits 502
VDAC, *See* digital-to-analog converter
VDAC0_CR register 291
VDAC0_DR0 register 291
VDAC0_DR1 register 292
VDAC1_CR register 291
VDAC1_DR0 register 291
VDAC1_DR1 register 292
VDAC2_CR register 291
VDAC2_DR0 register 291
VDAC2_DR1 register 292
VDAC3_CR register 291
VDAC3_DR0 register 291
VDAC3_DR1 register 292
VDAC4_CR register 291
VDAC4_DR0 register 291
VDAC4_DR1 register 292
VDAC5_CR register 291
VDAC5_DR0 register 291
VDAC5_DR1 register 292
VDAC6_CR register 291
VDAC6_DR0 register 291
VDAC6_DR1 register 292
VDACx_CR register 291, 417
VDACx_DR0 register 291

OBSOLETE

VDACx_DR1 register 292
VLT_CMP register 264, 509
VLT_CR register 264, 508
VM bits 508

W

watchdog timer reset 260
WDRS bit
    in CPU_SCR0 register 467
WDSL_Clear bits 457
WriteBlock function in SROM 56

X

XIO bit 69, 464
XRES reset 260

Z

Zero bit 69, 464

OBSOLETE