Customer training workshop

32-bit Arm® Cortex®-M7 microcontroller XMC7000 Real Time Clock(RTC)

Target products

› Target product list for this training material:

Family category	Series	Code flash memory size
XMC7200	XMC7200-8M	Up to 8384 KB
XMC7100	XMC7100-4M	Up to 4160 KB

Copyright © Infineon Technologies AG 2022. All rights reserved.

XMC7200 - 8M family

Introduction to XMC7200 - 8M

› The real-time clock (RTC) is a part of the System Resources block

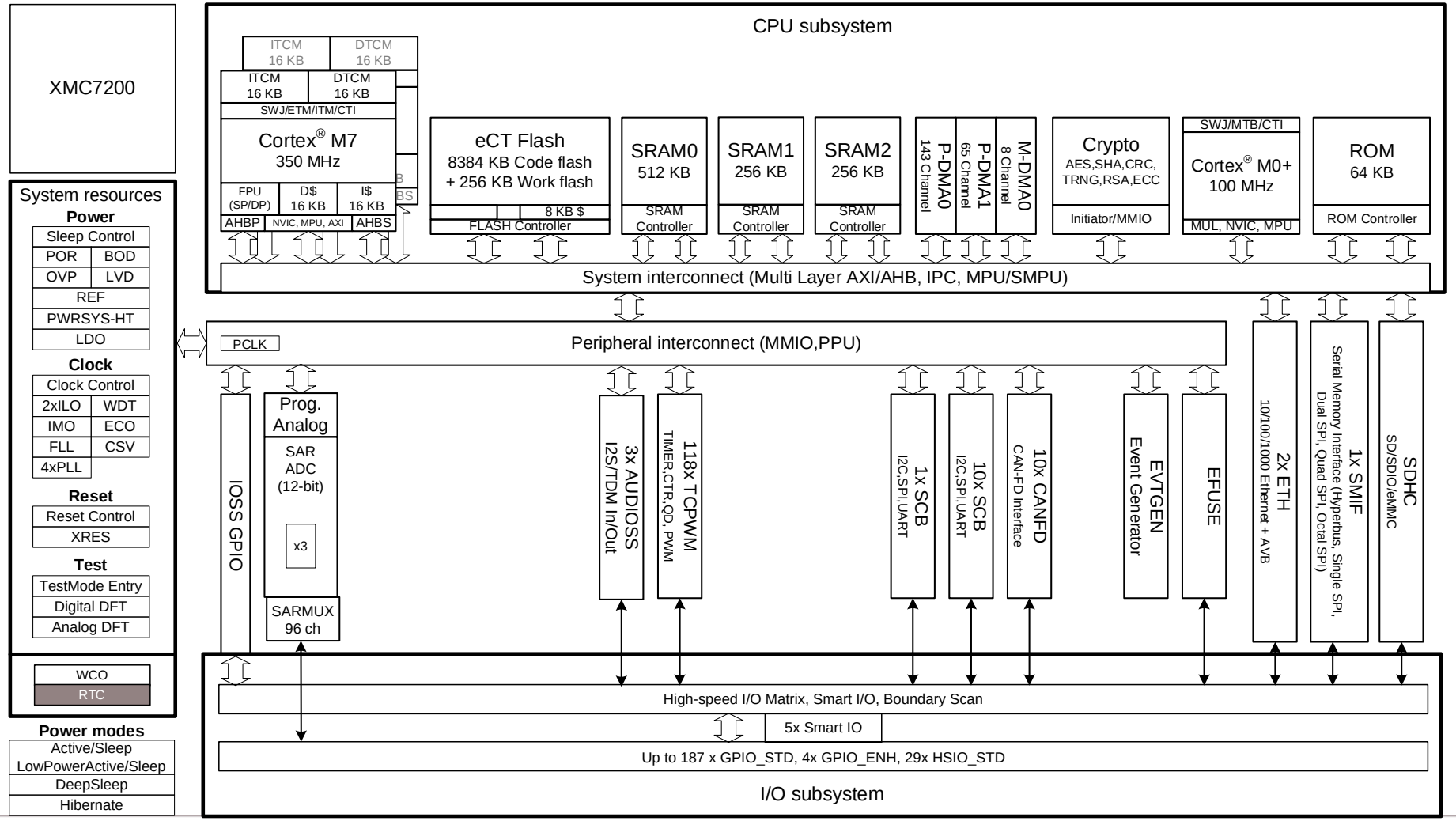

Hint Bar

Review TRM chapter 21 for additional details

Copyright © Infineon Technologies AG 2022. All rights reserved.

XMC7100 - 4M family

Introduction to XMC7100 - 4M

› The real-time clock (RTC) is a part of the System Resources block

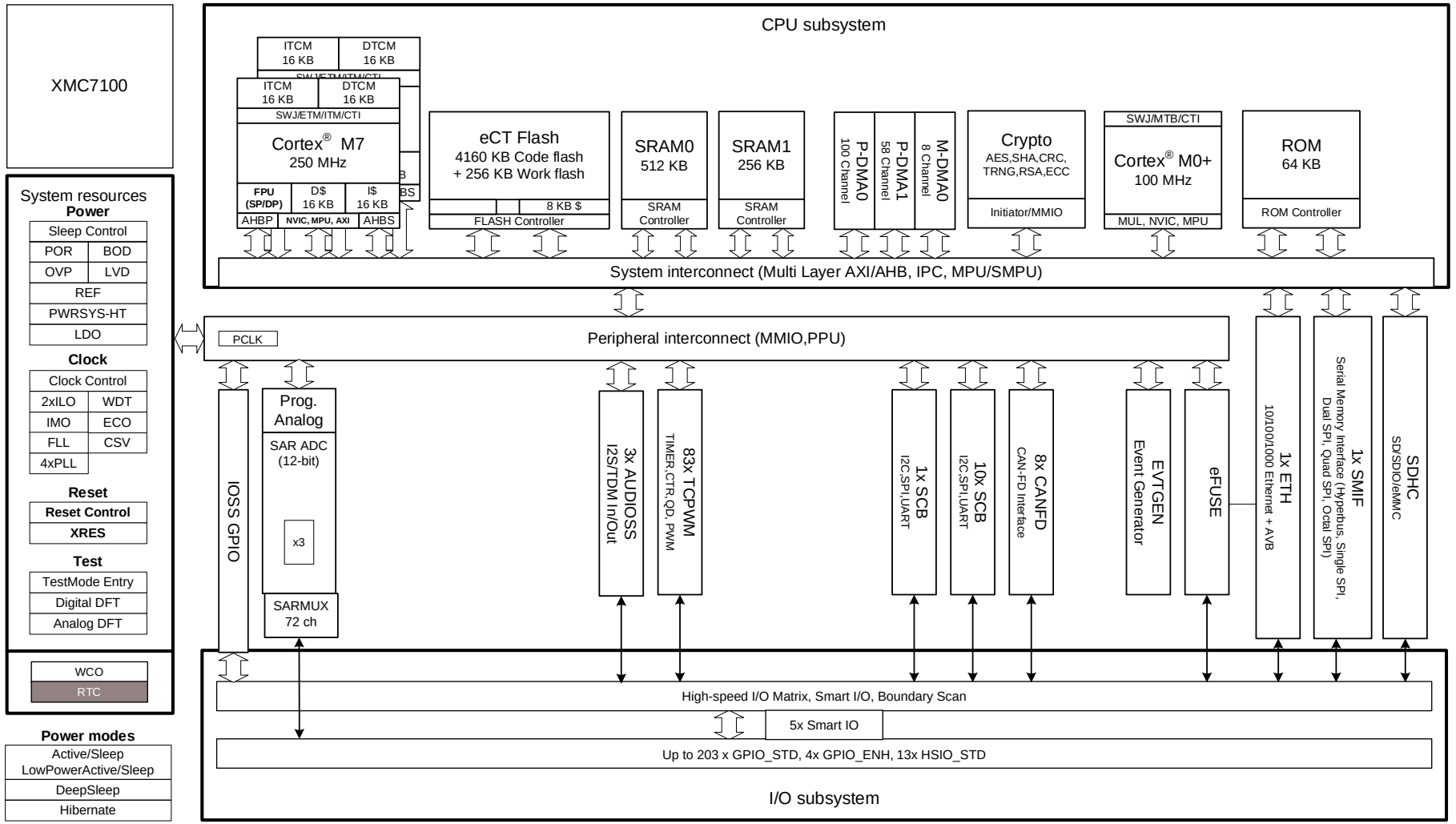

Hint Bar

Review TRM chapter 21 for additional details

Copyright © Infineon Technologies AG 2022. All rights reserved.

Real-time clock overview

- The real-time clock system is an “always-on” function
- Features
  - Fully-featured RTC
  - Year, month, date, day-of-week, hour, minute, second fields (all fields integer)
  - Supports both 12-hour and 24-hour formats
  - Automatic leap-year correction
  - Configurable alarm function
  - Alarm on month, date, day-of-week, hour, minute, second fields
  - Two independent alarms
  - Calibration for 32768-Hz WCO
  - Calibration waveform output
  - Supports 512 Hz, 1 Hz, and 2 Hz
  - Backup registers[1]

Hint Bar

Review TRM chapter 21 for additional details.

Review TRM chapter 18 for calibration details

[1] XMC7100 and XMC7200 features four 32-bit backup registers that can be used to store important information/flags. This includes information that needs to be retained when the device enters Hibernate mode.

Copyright © Infineon Technologies AG 2022. All rights reserved.

Real-time clock block diagram

- The RTC block consists of:
  - Input clock
  - Count field
  - Alarm (Interrupt)
  - Output (Calibration)
  - Registers (Read/Write)

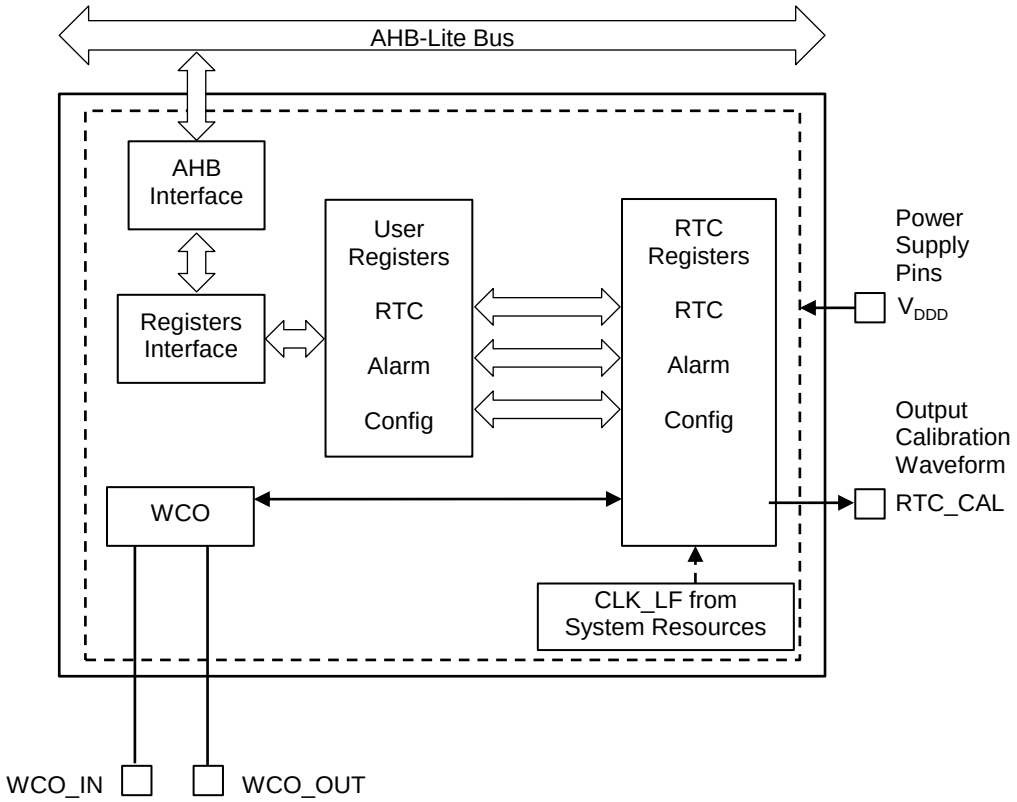

Hint Bar

Review TRM chapter 21 for additional details.

Copyright © Infineon Technologies AG 2022. All rights reserved.

RTC input clock sources

- Watch-crystal oscillator (WCO)
  - 32.768-kHz external crystal oscillator (default)
  - Using external clock (32.768-kHz)
- Low-frequency clock (CLK_LF)
  - Can select ILO0 or ILO1[1]

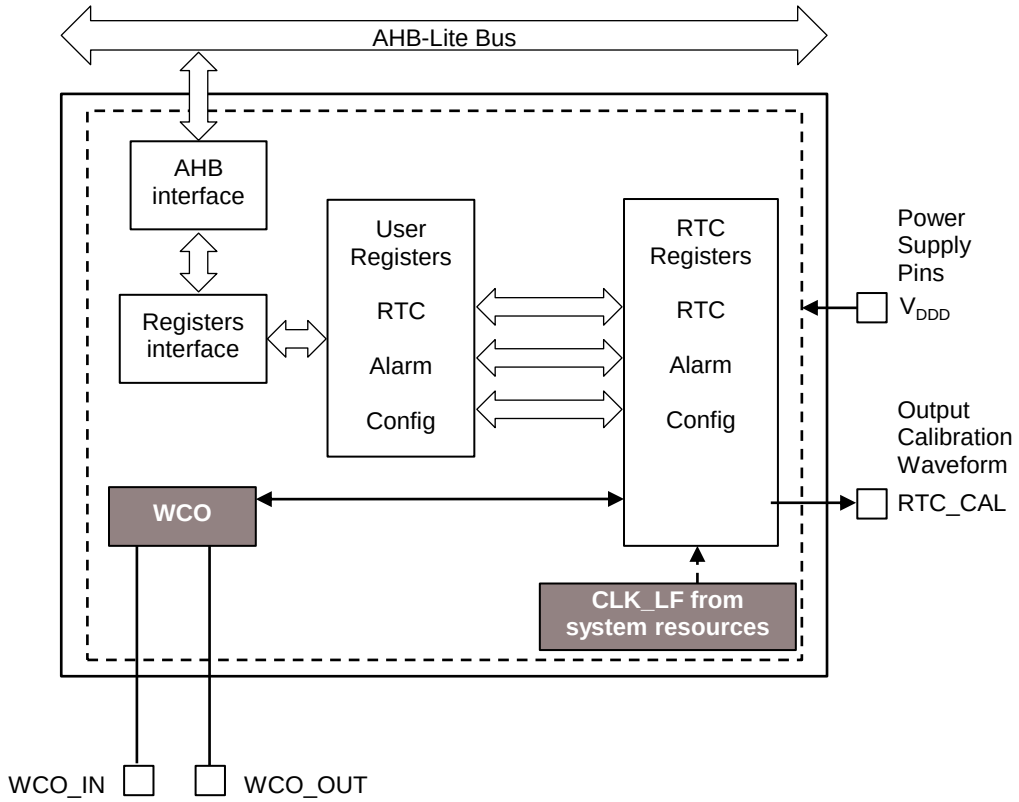

Hint Bar

Review TRM chapter 21 for additional details

Review TRM chapter 18 for clocking system details.

[1] Refer to the datasheet for ILO0 and ILO1 accuracy details

Copyright © Infineon Technologies AG 2022. All rights reserved.

Count field

The RTC count fields consist of seven integer fields and one control bit

- RTC_SEC
  Calendar seconds, value range = 0-59
- RTC_MIN
  Calendar minutes, value range = 0-59
- RTC_HOUR
  Calendar hours, value depends on 12 or 24-hour format
- CTRL_12HR
  Select the 12 or 24-hour mode
- RTC_DAY
  Calendar day of the week, value range = 1-7, user defines meaning of values
- RTC_DATE
  Calendar day of the month, value range = 1-31, automatic leap year correction until 2400
- RTC_MON
  Calendar month, value range = 1-12
- RTC_YEAR
  Calendar year, value range = 0-99

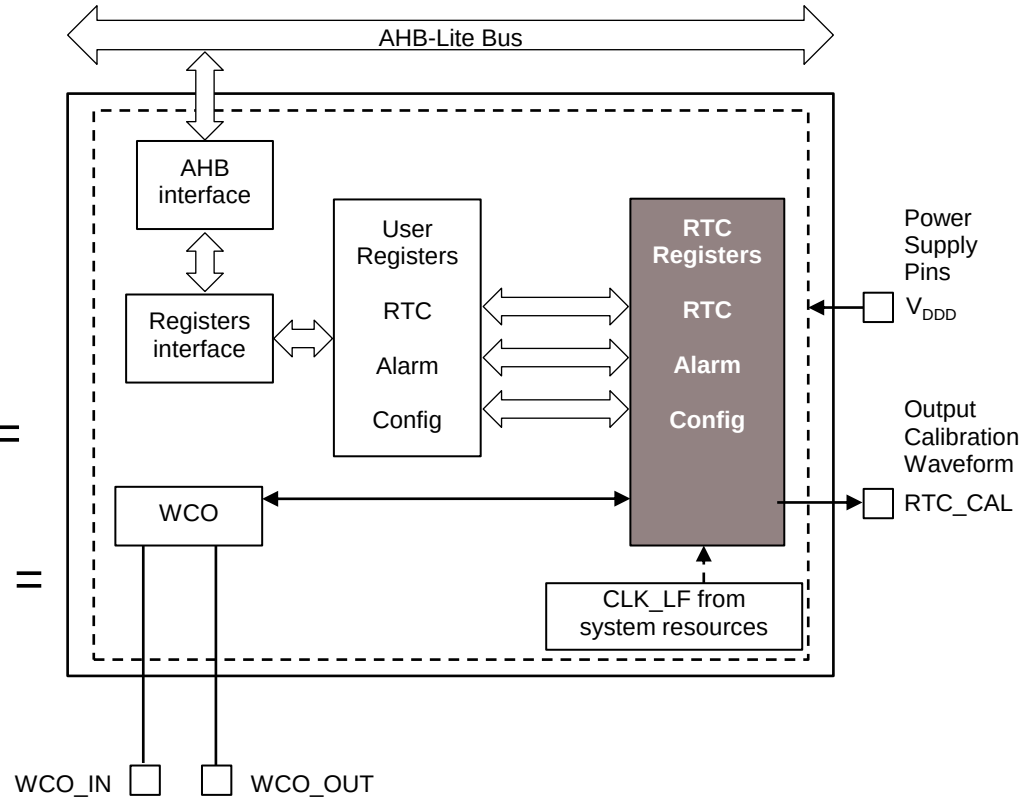

Hint Bar

Review TRM chapter 21 for additional details.

Copyright © Infineon Technologies AG 2022. All rights reserved.

Alarm (Interrupt)

- XMC7000 features two independent alarms. It can generate an interrupt for each alarm[1], which consists of six fields
  - **ALM_SEC**
    Alarm seconds, value range = 0–59
  - **ALM_MIN**
    Alarm minutes, value range = 0–59
  - **ALM_HOUR**
    Alarm hours, value depends on 12 or 24-hour format
  - **ALM_DAY**
    Calendar day of the week, value range = 1–7, user defines meaning of values
  - **ALM_DATE**
    Alarm day of the month, value range = 1–31, leap year corrected
  - **ALM_MON**
    Alarm month, value range = 1–12

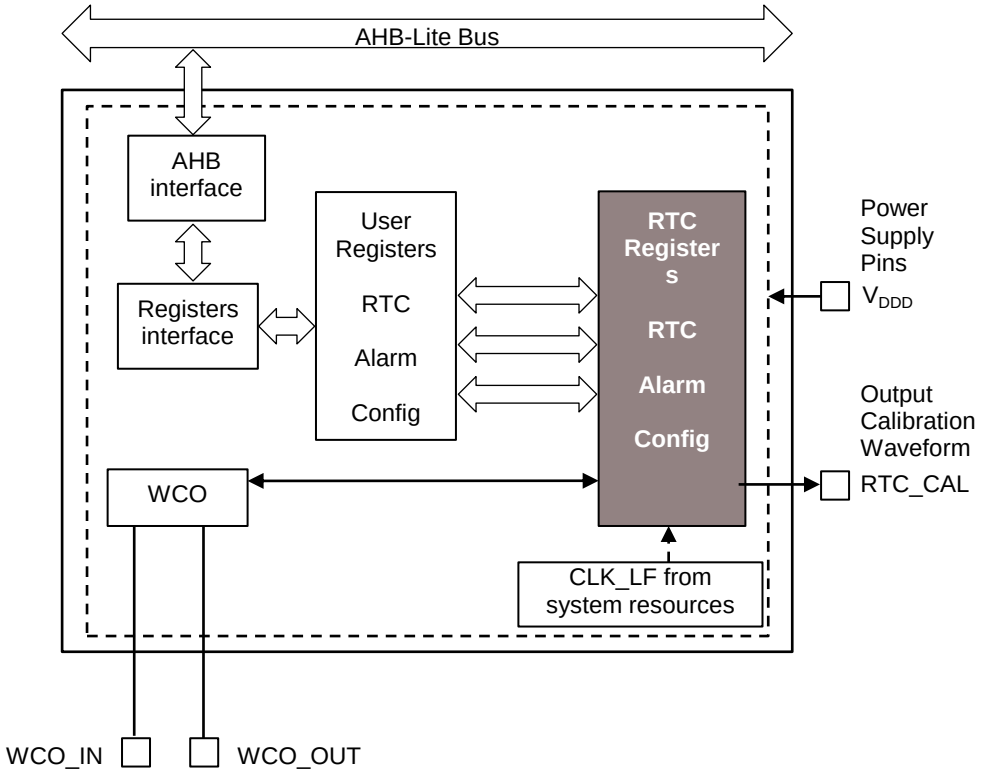

- Use cases
  - Alarm1: October, 8, AM10:15 (BACKUP_ALM1_DATE.ALM_MON=10, BACKUP_ALM1_DATE.ALM_DATE=8, BACKUP_ALM1_TIME.ALM_HOUR=10, BACKUP_ALM1_TIME.ALM_MIN=15)
  - Alarm2: November,15, AM11:30 (BACKUP_ALM2_DATE.ALM_MON=11, BACKUP_ALM2_DATE.ALM_DATE=15, BACKUP_ALM2_TIME.ALM_HOUR=11, BACKUP_ALM2_TIME.ALM_MIN=30)

Hint Bar

Review TRM chapter 21 for additional details.

[1] This alarm can be used as a wakeup source from sleep, deepsleep, and hibernate power modes. The

Copyright © Infineon Technologies AG 2022. All rights reserved.

Output (Calibration)

- RTC has a calibration waveform output that supports 512 Hz, 1 Hz, and 2 Hz
- Calibration procedure
  - ① Measure the frequency of the RTC_CLK pin output
  - ② Calculate the gap between ① and the expected value
  - ③ Feedback ② to register[1]

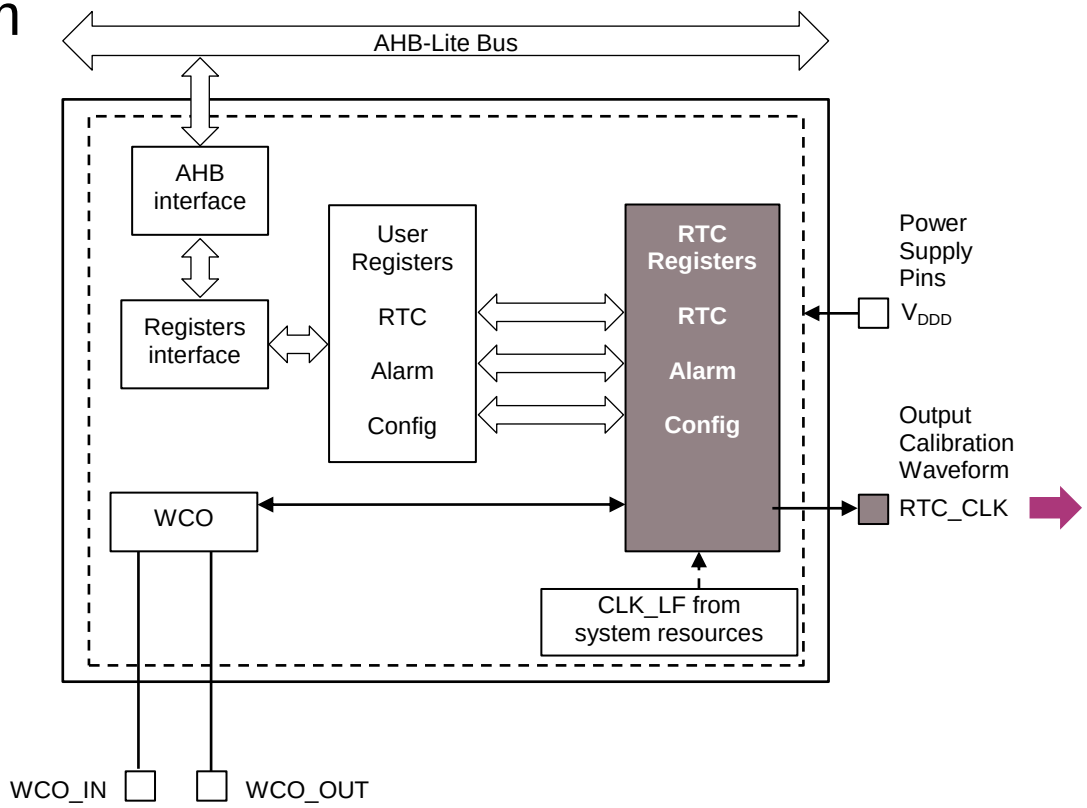

Hint Bar

Review the specific device datasheet for additional details

[1] The Register TRM will give you additional details on BACKUP_CAL_CTL.

Copyright © Infineon Technologies AG 2022. All rights reserved.

Register（Read Access）

- Software sets the BACKUP_RTC_RW.READ bit[1]
- When this bit is set, the RTC registers will be copied to the user registers and frozen
- The software can safely read the RTC value
- The read transaction is completed by clearing the BACKUP_RTC_RW.READ bit

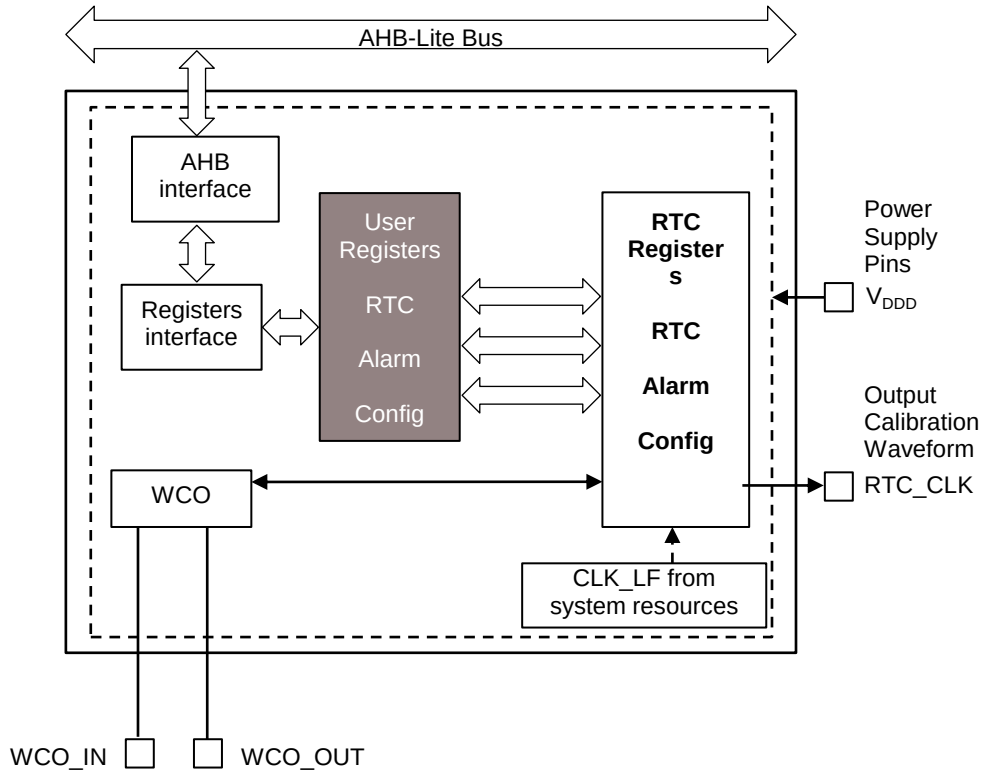

Hint Bar

Review TRM section 21.6.1 and the Register TRM for additional details

[1] The READ bit is described in the Register TRM (BACKUP_RTC_RW). It cannot be set in the following cases:
- The RTC is still busy with a previous operation.
- The BACKUP_RTC_RW.WRITE bit is set.

Copyright © Infineon Technologies AG 2022. All rights reserved.

Register（Write Access）

- Software sets the BACKUP_RTC_RW.WRITE bit[1]
- When the BACKUP_RTC_RW.WRITE bit is set, data can be written into the RTC user registers
- After the BACKUP_RTC_RW.WRITE bit is cleared, the hardware will copy all the new data to the RTC registers

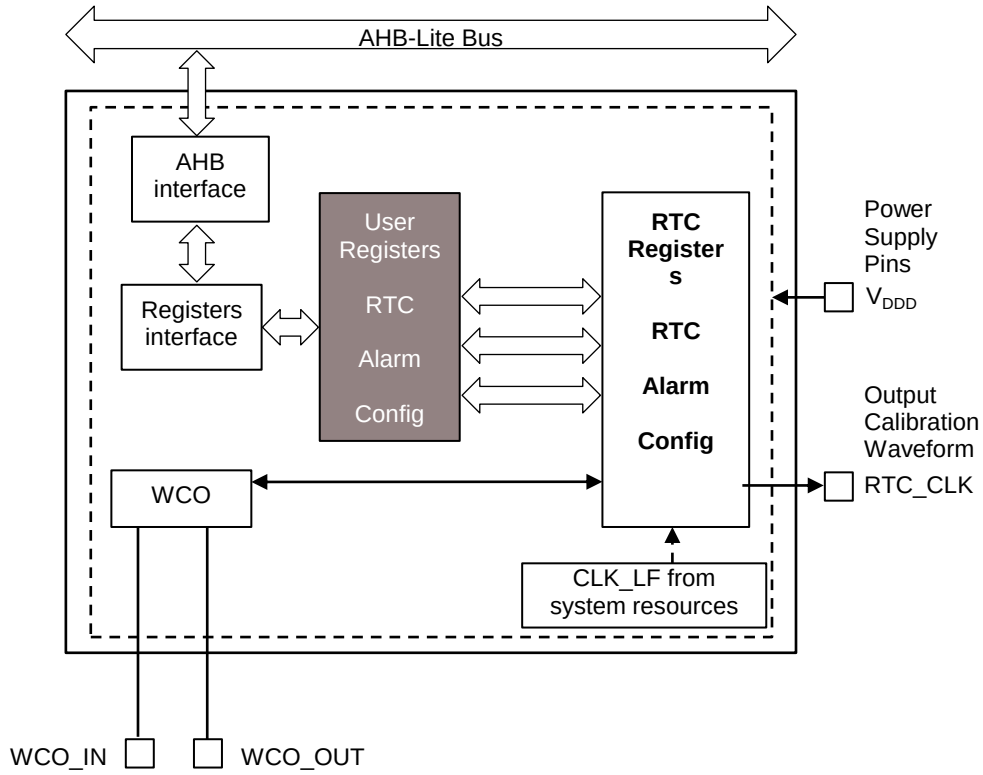

Hint Bar

Review TRM section 21.6.2 and the Register TRM for additional details

[1] The WRITE bit is described in the Register TRM (BACKUP_RTC_RW). It cannot be set in the following cases:
- The RTC is still busy with a previous operation.
- The BACKUP_RTC_RW.READ bit is set.

Copyright © Infineon Technologies AG 2022. All rights reserved.



Part of your life. Part of tomorrow.

Revision History

Revision	ECN	Submission Date	Description of Change
**	7769058	2022-01-06	Initial release

Copyright © Infineon Technologies AG 2022. All rights reserved.