Customer training workshop

32-bit Arm® Cortex®-M7 microcontroller XMC7000 – Direct Memory Access (DMA)



Target products

› Target product list for this training material:

Family category	Series	Code flash memory size
XMC7200	XMC7200-8M	Up to 8384 KB
XMC7100	XMC7100-4M	Up to 4160 KB

Copyright © Infineon Technologies AG 2022. All rights reserved.

XMC7200 - 8M family

Introduction to XMC7200 – 8M

› DMA is part of the CPU subsystem

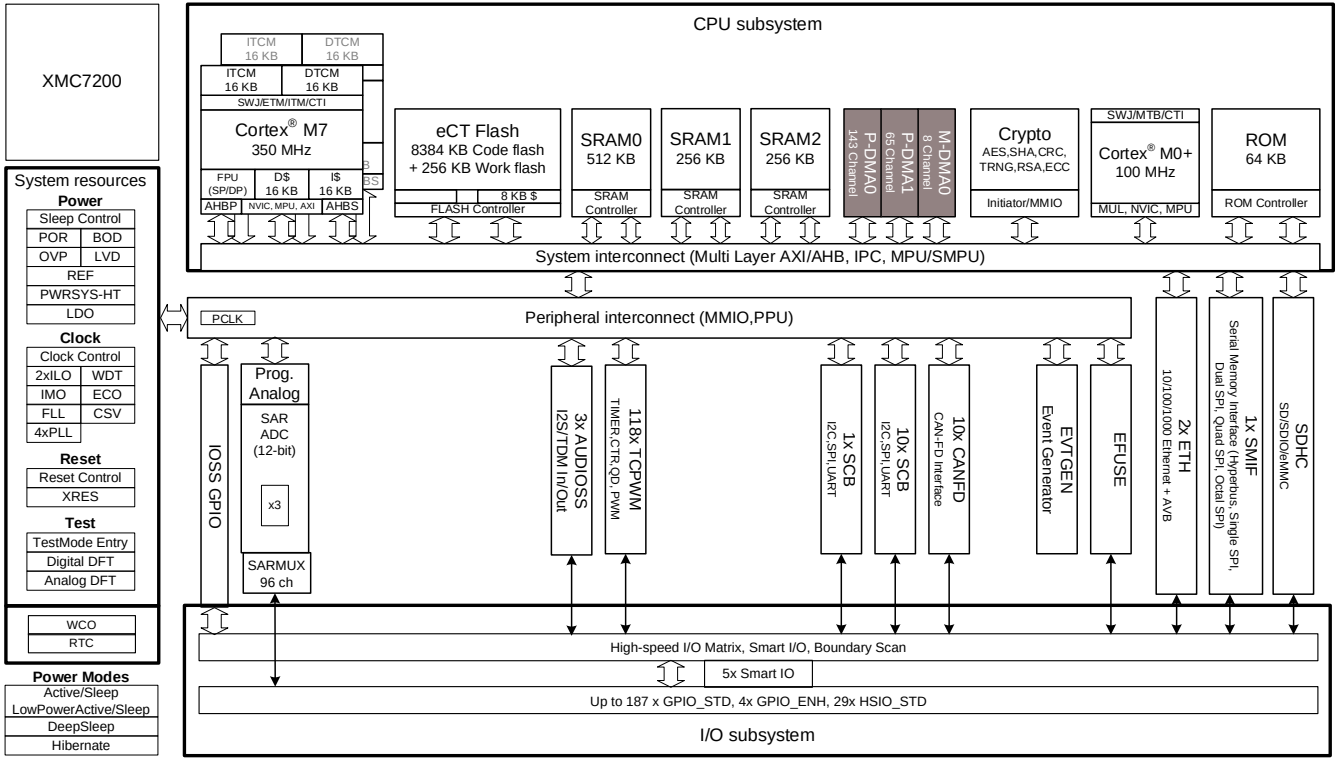

Hint Bar

Review TRM chapter 7 for additional details

Copyright © Infineon Technologies AG 2022. All rights reserved.

XMC7100 - 4M family

Introduction to XMC7100 – 4M

› DMA is part of the CPU subsystem

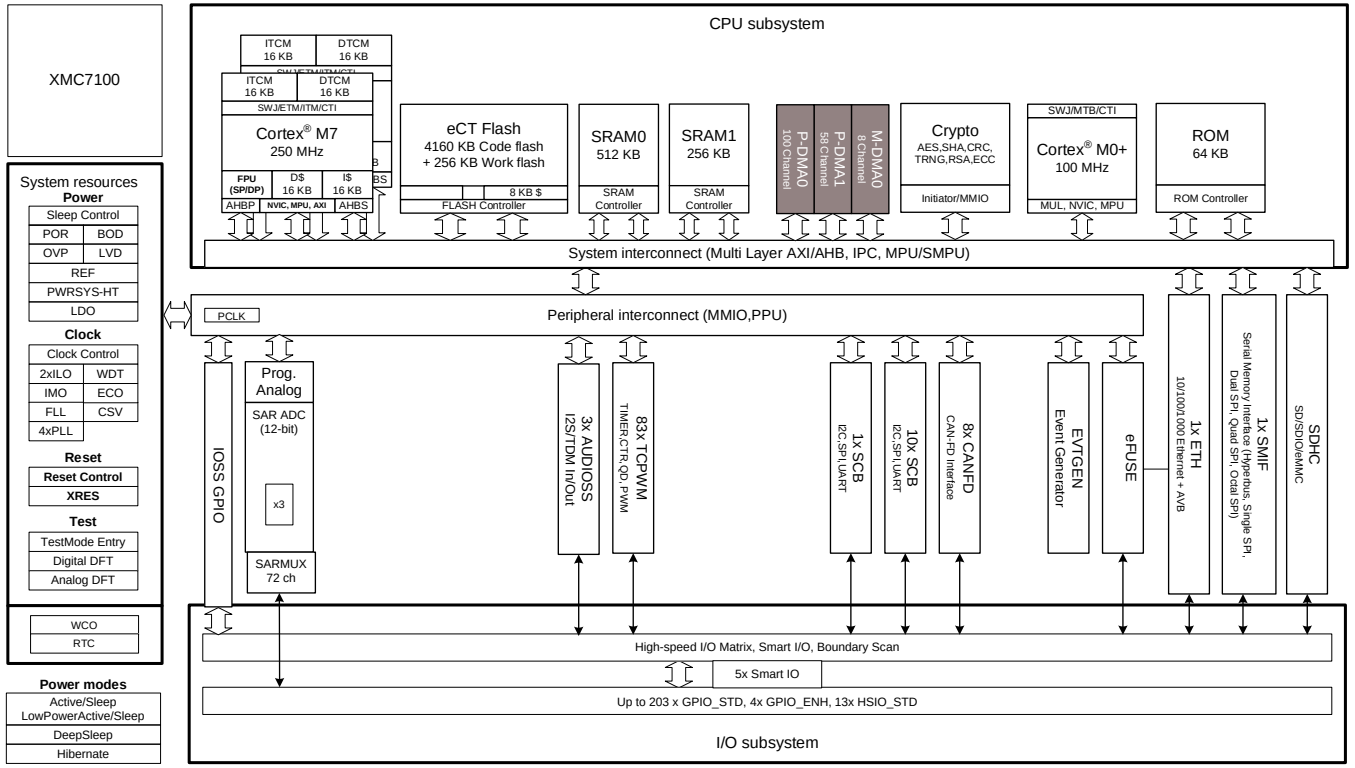

Hint Bar

Review TRM chapter 7 for additional details

Copyright © Infineon Technologies AG 2022. All rights reserved.

DMA overview

- XMC7000 has two types of DMA
  - Peripheral DMA (P-DMA)
  - Memory DMA (M-DMA)

Feature	P-DMA	M-DMA
Focus	Low latency	**High memory bandwidth**
Used for	Transfer between peripheral and memory[1]	**Transfer between memories[2]**
Transfer engine	Shared between all channels	**Dedicated for each channel**
Transfer size	8-bit/16-bit/32-bit	8-bit/16-bit/32-bit
Channel priority	Four levels Preemptable	Four levels
Transfer mode	- Single - 1D/2D - CRC transfer	- Single - 1D/2D **- Memory copy** **- Scatter**
Descriptor	- Source and destination address - Transfer size - Channel action - Data transfer mode - Activation trigger type (4 types) - Output trigger type (4 types) - Interrupt type (4 types) - Descriptor chaining	- Source and destination address - Transfer size - Channel action - Data transfer mode - Activation trigger type (4 types) - Output trigger type (4 types) - Interrupt type (4 types) - Descriptor chaining
Access-control attributes[3]	- Privileged/Unprivileged - Secure/Non-secure - Protection contexts	- Privileged/Unprivileged - Secure/Non-secure - Protection contexts

Hint Bar

Review TRM chapter 7 for additional details

Features highlighted are the main difference between P-DMA and M-DMA.

Refer to the Protection Units training section for additional details

[1] P-DMA can also be used to transfer data between memories.
[2] M-DMA can also be used to transfer data between peripheral and memory.
[3] P-DMA and M-DMA channels inherit the access attributes of the bus transfer that programmed the channel.

Copyright © Infineon Technologies AG 2022. All rights reserved.

P-DMA block diagram

- Trigger multiplexers
  - Connect each channel to a specific system trigger
  - Include hardware[1] (HW) and software (SW) system triggers
  - Trigger output (tr_out)
    - Each trigger output can be used as its own active trigger using trigger multiplexers
    - They can be used to trigger different transfers as input triggers for other channels[2]

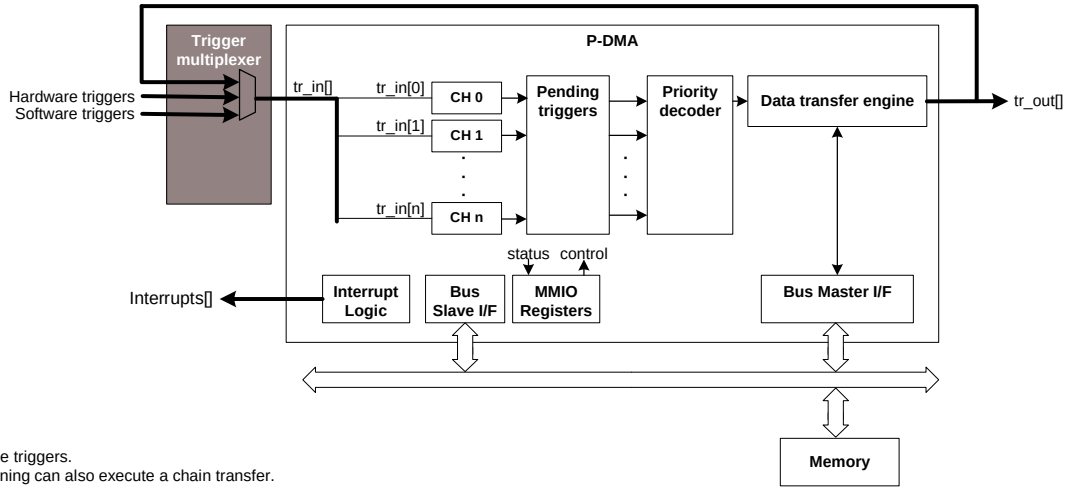

Hint Bar

Review TRM section 7.1.6 and chapter 29 for additional details

Refer to Descriptor Chaining for Chain Transfer details

[1] Refer to the device datasheet for available hardware triggers.
[2] tr_out can execute a chain transfer. Descriptor chaining can also execute a chain transfer.

Copyright © Infineon Technologies AG 2022. All rights reserved.

Trigger output (tr_out)

- Use Case: CRC calculation of serial communication data
  - Combined operation of Descriptors 0 and 1
  - P-DMA:
    1. Is triggered by SCB when data reception is complete
    2. Loads Descriptor 0 from memory
    3. Transfers from FIFO to memory
    4. Outputs tr_out after completing Descriptor 0 transfer
    5. Loads Descriptor 1 by tr_out
    6. Activates CRC Transfer mode
    7. Runs CRC calculation
    8. Transfers CRC result to destination address
    9. Generates interrupt to CPU by end of descriptor

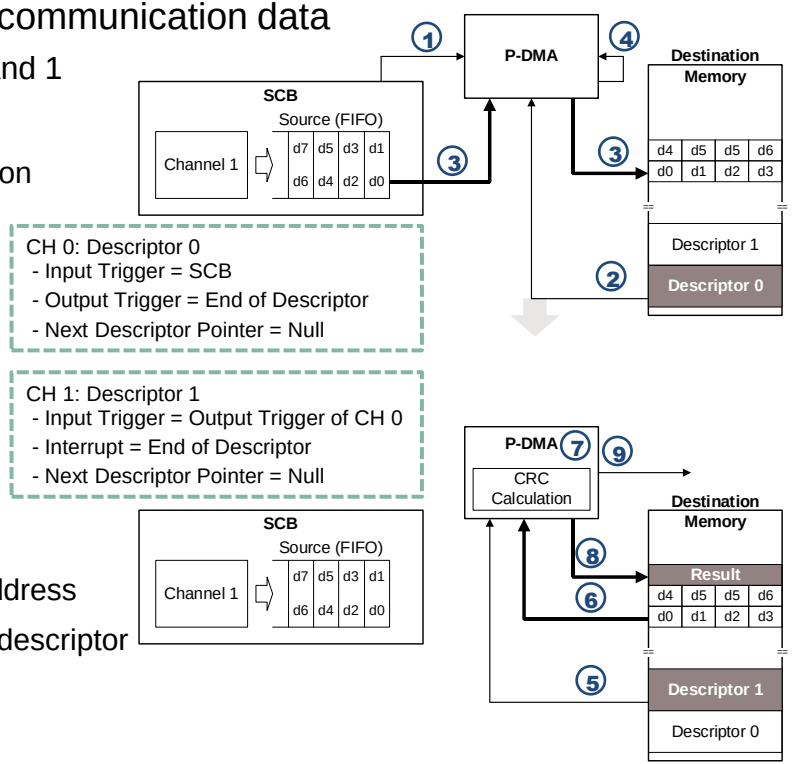

Hint Bar

Refer to CRC Transfer for CRC calculation

- Advantage
  - Multiple data transfers can be executed continuously by one trigger

Copyright © Infineon Technologies AG 2022. All rights reserved.

P-DMA block diagram

- Pending triggers
  - Keeps track of activated triggers by storing channel triggers
  - Manages multiple pending channel triggers
- Available pre-emptive setting
  - If set, the higher-priority pending channel can pre-empt the current channel between single transfers
- Priority decoder
  - Determines the highest-priority channel of pending triggers
  - Has four priority levels
  - Performs round-robin arbitration within the same priority group

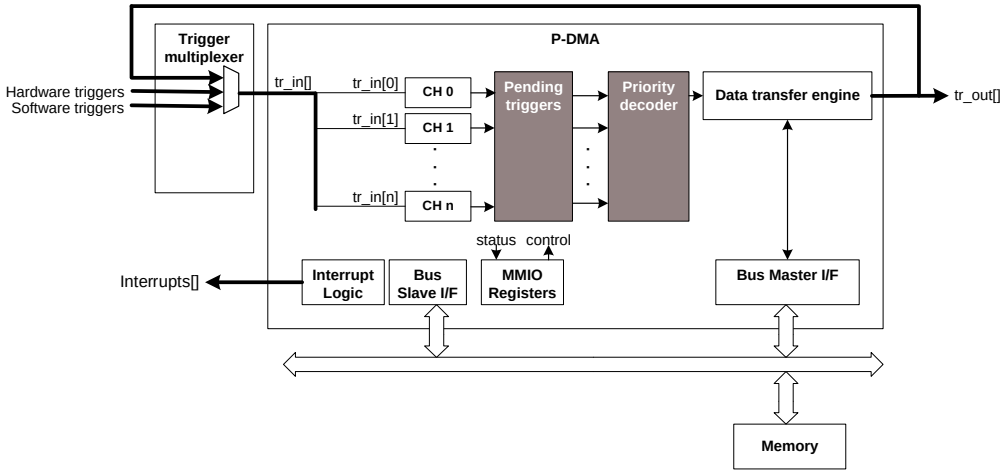

Hint Bar

Review TRM section 7.1.6 for additional details

Copyright © Infineon Technologies AG 2022. All rights reserved.

P-DMA block diagram

- Data transfer engine
  - Shared by each channel
  - Transfers data from source to destination according to descriptor
  - Reads channel descriptor from memory
  - Generates the trigger out to trigger multiplexers

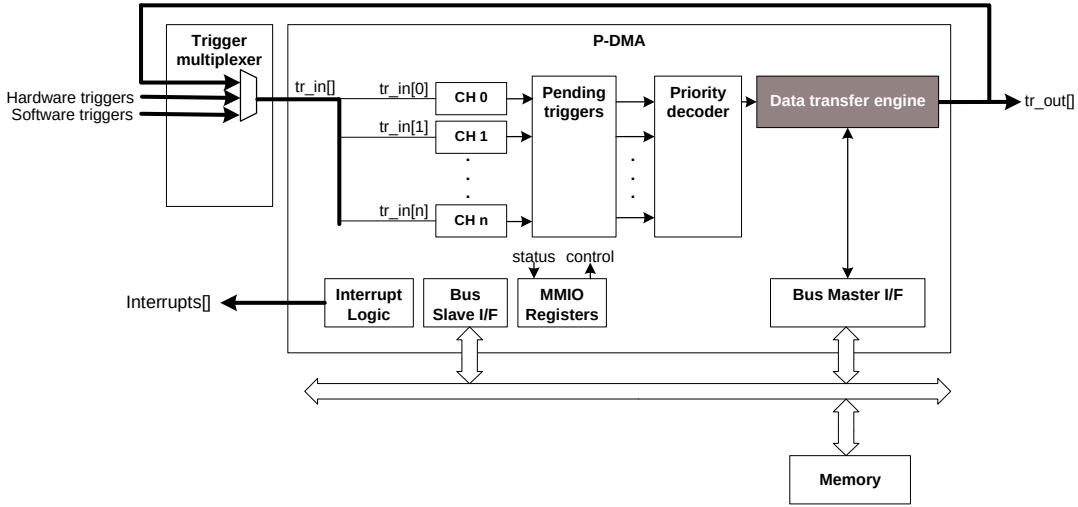

Hint Bar

Review TRM section 7.1.6 for additional details

Copyright © Infineon Technologies AG 2022. All rights reserved.

P-DMA block diagram

- Descriptor
  - Stored in memory
  - Supports descriptor chaining
  - Descriptor types
    - Single transfer
    - 1D transfer
    - 2D transfer
    - CRC transfer
  - Descriptor structure
    - Descriptor control:
      Trigger type, transfer size, descriptor type
    - Source address/destination address
    - X(Inner) loop/Y(Outer) loop control
    - Next descriptor pointer
  - The descriptor pointer position for each channel is stored in the register

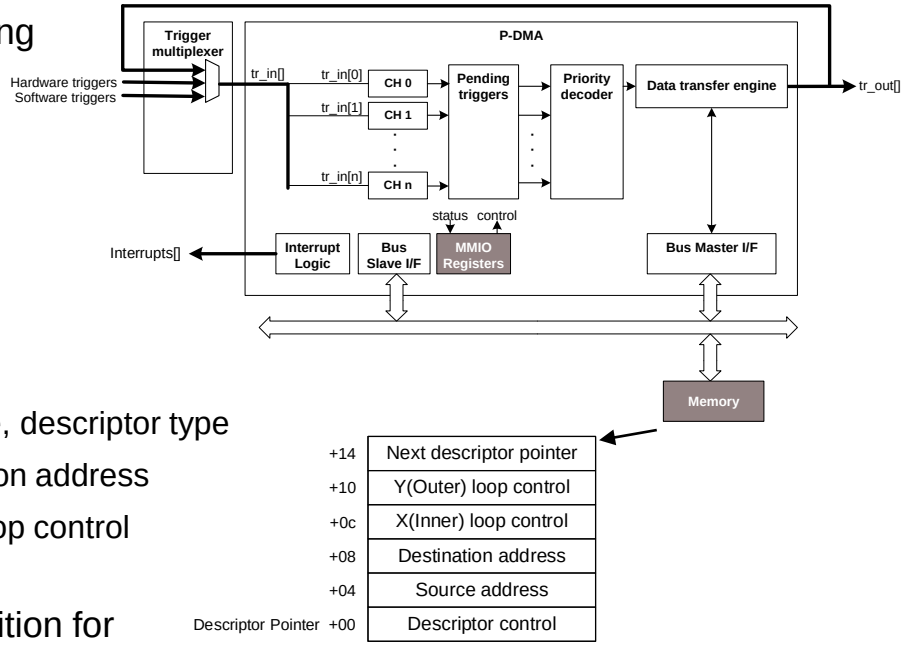

Hint Bar

Review TRM chapter 7.1.3 and Register TRM for additional details

System RAM is used store the descriptor

Copyright © Infineon Technologies AG 2022. All rights reserved.

Descriptor chaining

- Descriptor chaining
  - Descriptors are chained by storing the next descriptor pointer in the current descriptor
  - “0” (NULL pointer) is stored at the end of the descriptor list
  - It is possible to have a circular list. It will stop when:
    - A transfer error occurs
    - The controller or channel is disabled by software

- Use case: Double buffer storing using two descriptors
  - Descriptors 0 and 1 are chained together
    1. P-DMA is triggered by SCB
    2. Descriptor 0: Data transfer from SCB to Buffer0
       ⇒ Descriptor chaining to Descriptor 1
    3. P-DMA is triggered by SCB
    4. Descriptor 1: Data transfer from SCB to Buffer1
       ⇒ Descriptor chaining to Descriptor 0

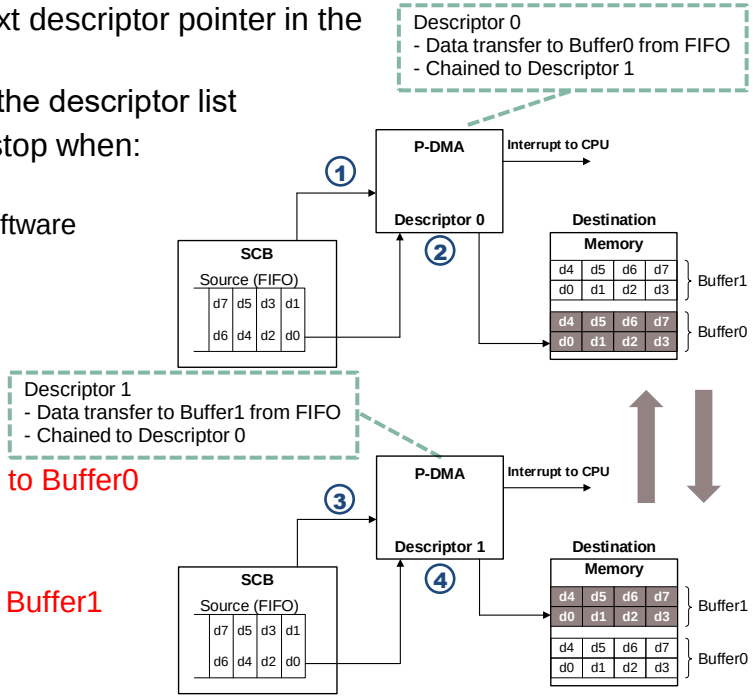

Hint Bar

A descriptor chaining group is also referred to as a descriptor list

The address of the current descriptor is indicated in the CH_CURR_PTR register

The next descriptor address is updated after the execution of the current descriptor

M-DMA also has the same register

Copyright © Infineon Technologies AG 2022. All rights reserved.

Descriptor type (1/4)

- Single transfer
  - Single data element (8-bit, 16-bit, or 32-bit) transfer
  - Uses four-word descriptor
  - Transfer example:

    DST_ADDR = (DATA_SIZE) SRC_ADDR

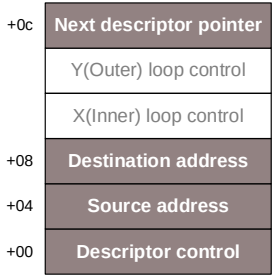

- Use case: Transfer A/D conversion results with A/D trigger
  1. Move stored conversion data to data register
  2. Activate P-DMA with Channel Done trigger
  3. Transfer data from SRC_ADDR to DST_ADDR
  4. Generate interrupt to CPU

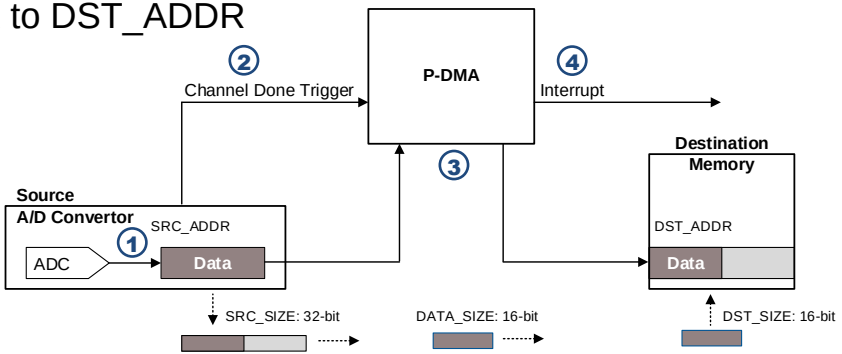

Hint Bar

Review TRM chapter 7.1.3 and Register TRM for additional details

Copyright © Infineon Technologies AG 2022. All rights reserved.

Descriptor type (2/4)

- 1D transfer
  - One-dimensional “for loop” transfer
  - Uses five-word descriptor
  - Transfer example:

```
for (X_IDX =0; X_IDX <= COUNT; X_IDX++){
   DST_ADDR[DST_INCR] = (DATA_SIZE) SRC_ADDR[SRC_INCR]
 }
```

*DST_INCR/SRC_INCR depend on X_INCR

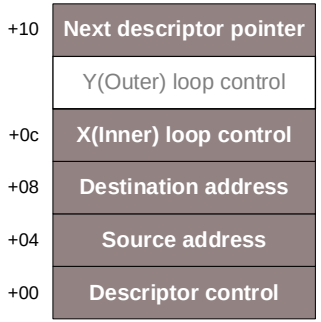

- Use case: Transfer SCB reception data in FIFO
  1. Activate P-DMA by receiving a completion trigger
  2. Repeat data transfer from SRC_ADDR to DST_ADDR by COUNT
  3. Generate interrupt to CPU

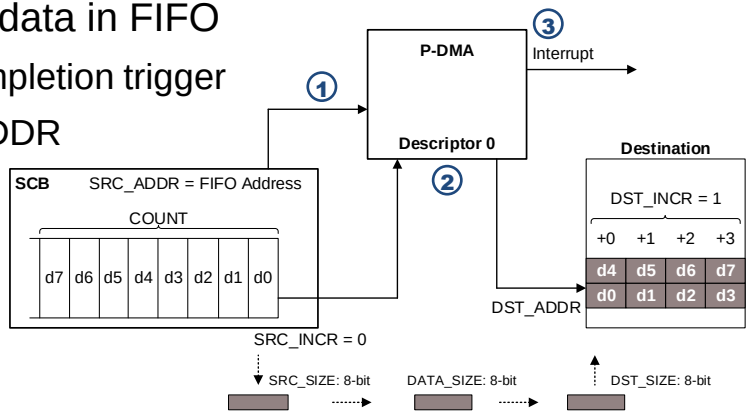

Hint Bar

Review TRM section 7.1.3 and Register TRM for additional details

Copyright © Infineon Technologies AG 2022. All rights reserved.

Descriptor type (3/4)

- 2D transfer
  - Two-dimensional “for loop” transfer
  - Uses six-word descriptor
  - Transfer example:

```
for (Y_IDX =0; Y_IDX <= Y_COUNT; Y_IDX++){
    for (X_IDX =0; X_IDX <= X_COUNT; X_IDX++){
        DST_ADDR[DST_INCR] = (DATA_SIZE) SRC_ADDR[SRC_INCR]
    }
}
```

*DST_INCR/SRC_INCR depend on X/Y_INCR

+14	Next descriptor pointer
+10	Y(Outer) loop control
+0c	X(Inner) loop control
+08	Destination address
+04	Source address
+00	Descriptor control

Hint Bar

Review TRM section 7.1.3 and Register TRM for additional details

- Use case: Transfer SCB reception data in FIFO (1/2)
  - Handling multiple FIFO data as one data
    1. Activate P-DMA by receiving a completion trigger
    2. Repeat data transfer from SRC_ADDR to DST_ADDR by X_COUNT

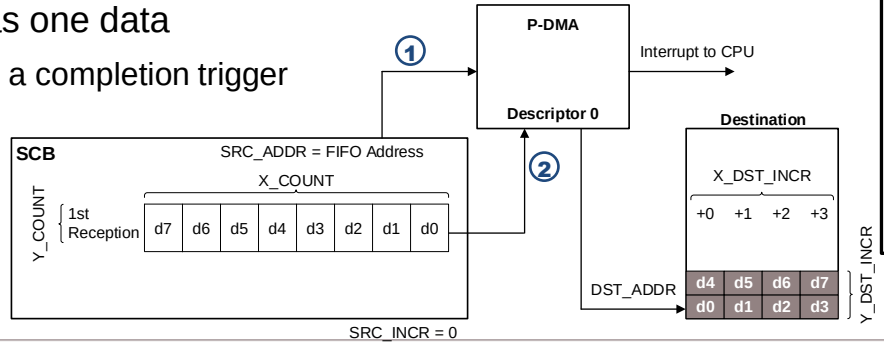

Copyright © Infineon Technologies AG 2022. All rights reserved.

Descriptor type (3/4)

- 2D transfer
  - Two-dimensional “for loop” transfer
  - Uses six-word descriptor
  - Transfer example:

```
for (Y_IDX =0; Y_IDX <= Y_COUNT; Y_IDX++){
    for (X_IDX =0; X_IDX <= X_COUNT; X_IDX++){
        DST_ADDR[DST_INCR] = (DATA_SIZE) SRC_ADDR[SRC_INCR]
    }
}
```

*DST_INCR/SRC_INCR depend on X/Y_INCR

+14	Next descriptor pointer
+10	Y(Outer) loop control
+0c	X(Inner) loop control
+08	Destination address
+04	Source address
+00	Descriptor control

Hint Bar

Review TRM section 7.1.3 and Register TRM for additional details

- Use case: Transfer SCB reception data in FIFO (2/2)
  - Handling multiple FIFO data as one data
    1. Activate P-DMA by receiving a completion trigger
    2. Repeat data transfer from SRC_ADDR to DST_ADDR by X_COUNT
    3. Activate P-DMA by receiving a completion trigger, when the second data is received
    4. Repeat data transfer from SRC_ADDR to DST_ADDR by X_COUNT

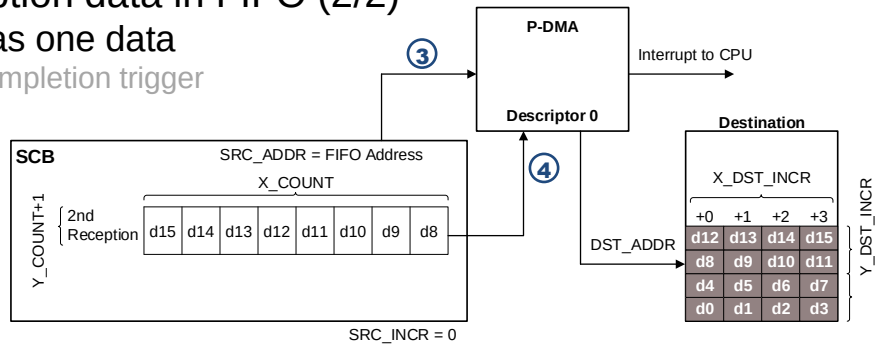

Copyright © Infineon Technologies AG 2022. All rights reserved.

Descriptor type (4/4)

- CRC transfer
  - Execute the CRC calculation of the specified area
    - CRC-32, CRC-16, CRC-16-CCITT
    - Byte ordering/remainder bit reverse
    - Set CRC seed value
    - CRC result is stored to the destination address
  - This mode does not transfer data
- Use case: Initial CRC check for program data in Flash
  1. Activate P-DMA with software trigger
  2. Transfer data from SRC_ADDR
  3. CRC calculation (code area)
  4. Transfer CRC result to DST_ADDR
  5. Generate interrupt to CPU
  6. The CPU checks the CRC result with the expected value
- Advantage: Performs high-speed CRC calculation without a CPU

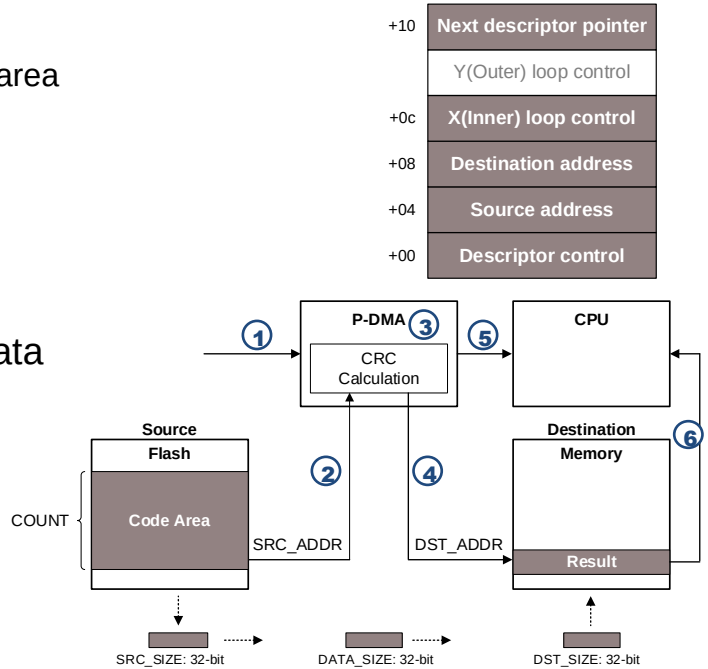

Hint Bar

Review TRM section 7.1.3 and Register TRM for additional details

Copyright © Infineon Technologies AG 2022. All rights reserved.

Descriptor trigger types (1/5)

- Input trigger
  - Four types of input trigger action
    - Type 0: Executed by a single transfer
    - Type 1: Executed by a single 1D transfer
    - Type 2: Executed by the current descriptor
    - Type 3: Executed by a descriptor list
- Output trigger/interrupt
  - Four types of output trigger/interrupt generation
    - Type 0: Generated by a single transfer
    - Type 1: Generated by single 1D transfer
    - Type 2: Generated by the current descriptor
    - Type 3: Generated by descriptor list
- Input trigger, output trigger, and interrupt can be set individually

Hint Bar

Review TRM sections 7.1.3 and 7.2.3 and Register TRM for additional details

Copyright © Infineon Technologies AG 2022. All rights reserved.

Descriptor trigger types (2/5)

- Example of trigger action
  - Descriptor input trigger Type 0: Executes a single transfer
  - Descriptor output trigger/interrupt Type 0: Generated by a single transfer

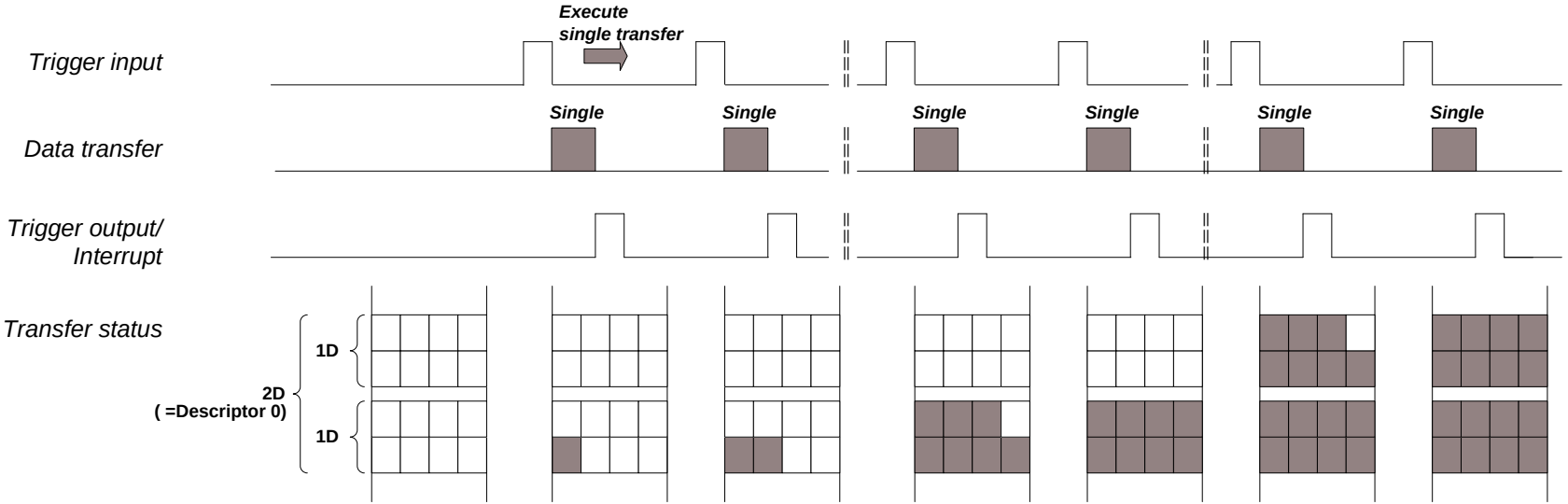

Copyright © Infineon Technologies AG 2022. All rights reserved.

Descriptor trigger types (3/5)

- Example of trigger action
  - Descriptor input trigger Type 1: Executed by a single 1D transfer
  - Descriptor output trigger/interrupt Type 1: Generated by a single 1D transfer

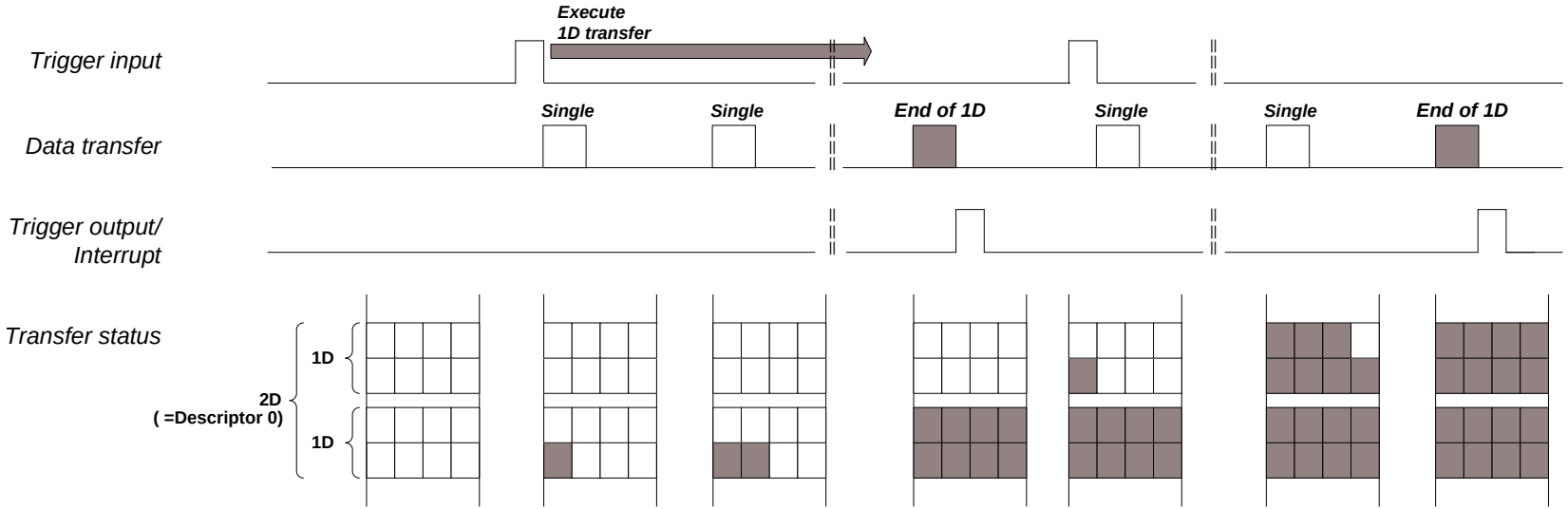

Copyright © Infineon Technologies AG 2022. All rights reserved.

Descriptor trigger types (4/5)

- Example of trigger action
  - Descriptor input trigger Type 2: Executed by the current descriptor
  - Descriptor output trigger/interrupt Type 2: Generated by the current descriptor

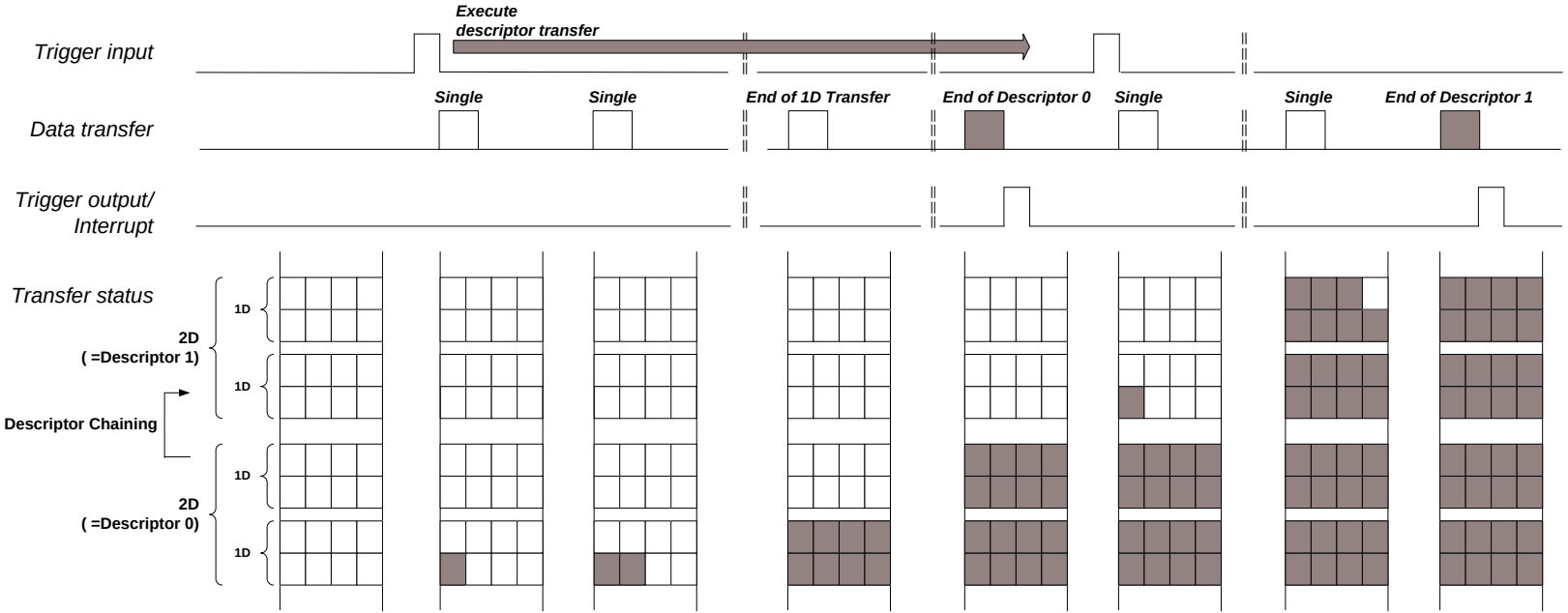

Copyright © Infineon Technologies AG 2022. All rights reserved.

Descriptor trigger types (5/5)

- Example of trigger action
  - Descriptor input trigger Type 3: Executed by a descriptor list
  - Descriptor output trigger/interrupt Type 3: Generated by a descriptor list

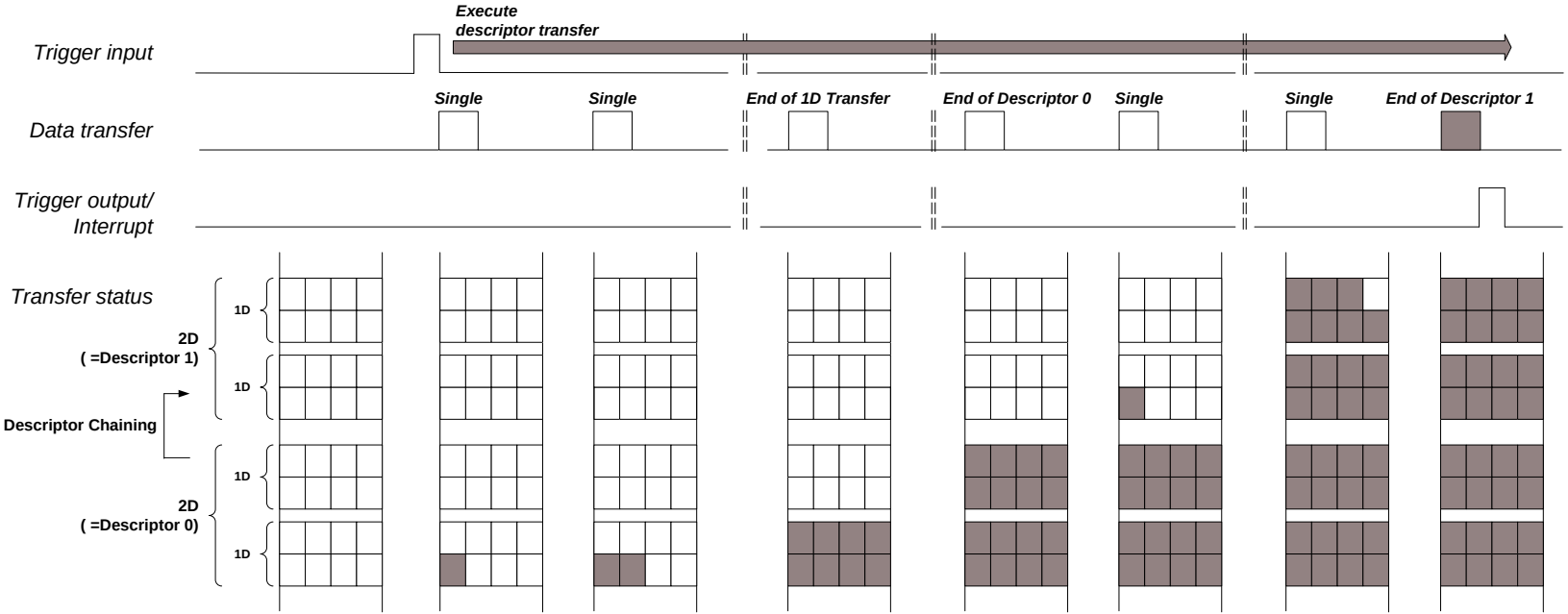

Copyright © Infineon Technologies AG 2022. All rights reserved.

M-DMA block diagram

- Trigger multiplexers
  - Connect each channel to one specific system trigger
  - Software (SW) system triggers[1]
  - Trigger output (tr_out)
    - Each trigger output can be used as its own active trigger using trigger multiplexers
    - They can be used to trigger different transfers as input triggers for other channels

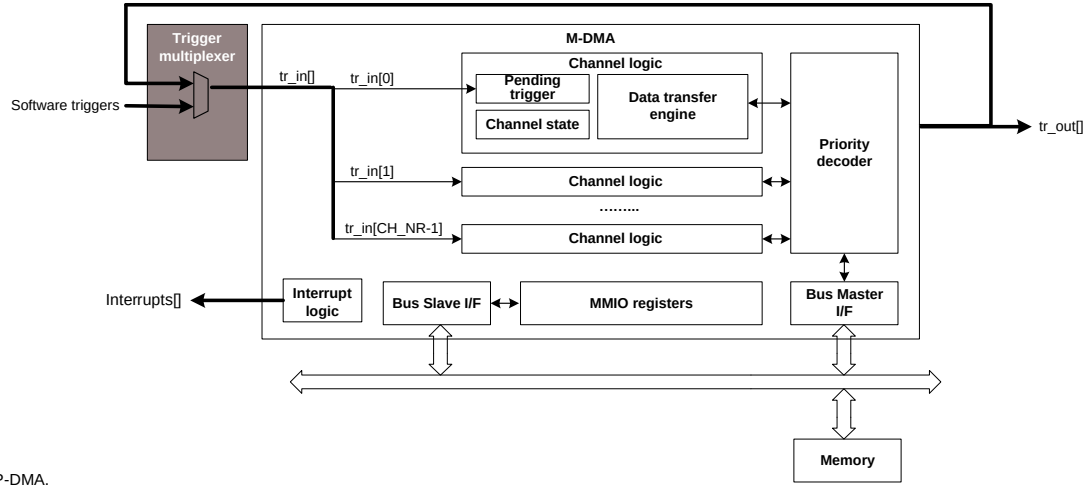

Hint Bar

Review TRM section 7.2.6 and chapter 29 for additional details

[1] This is different from P-DMA.

Copyright © Infineon Technologies AG 2022. All rights reserved.

M-DMA block diagram

- Pending triggers
  - Keeps track of activated triggers by storing channel triggers
  - Manages multiple pending channel triggers
- Priority decoder
  - Determines the highest priority channel of transfer request from each transfer engine[1]
  - Has four priority levels
  - Performs round-robin arbitration within the same priority group

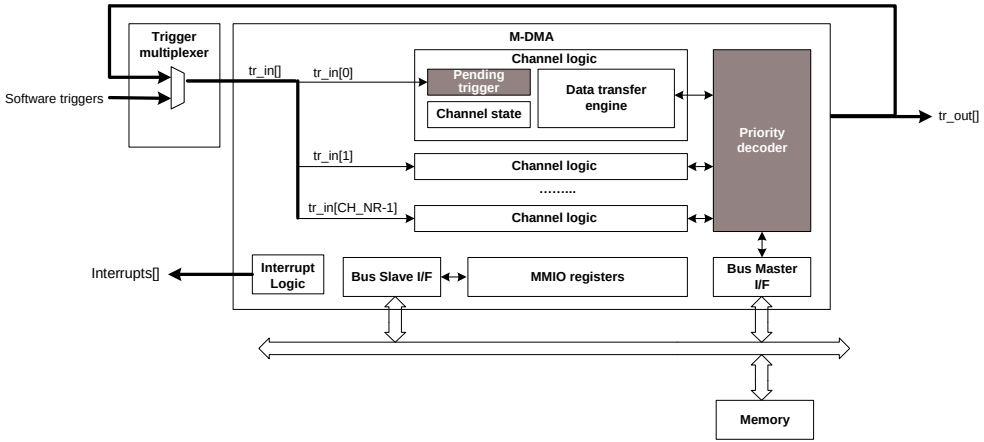

Hint Bar

Review TRM section 7.2.6 for additional details

[1] This is different from P-DMA.

Copyright © Infineon Technologies AG 2022. All rights reserved.

M-DMA block diagram

- Data transfer engine
  - Dedicated engine for each channel[1]
  - Transfers data from source to destination according to descriptor
  - Reads channel descriptor from memory
  - Generates the trigger out to trigger multiplexers

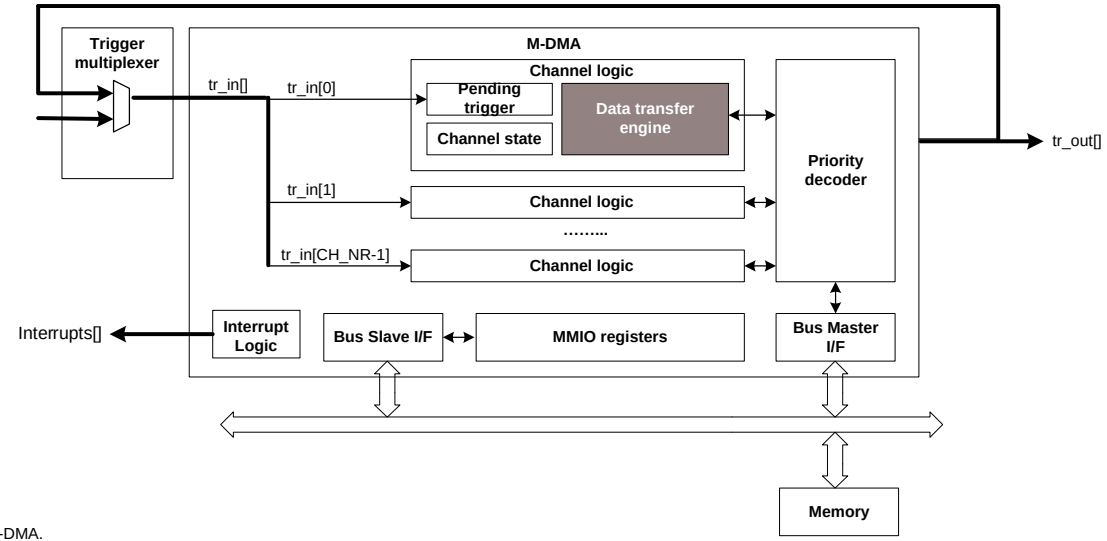

Hint Bar

Review TRM section 7.2.6 for additional details

[1] This is different from P-DMA.

Copyright © Infineon Technologies AG 2022. All rights reserved.

M-DMA block diagram

- Descriptor
  - Stored in memory
  - Descriptor chaining
  - Descriptor types
    - Single transfer
    - 1D transfer
    - 2D transfer
    - Memory copy[1]
    - Scatter[1]
  - Descriptor structure
    - Descriptor control:
      Trigger type, transfer size, descriptor type
    - Source address/destination address
    - X(Inner) loop/Y(Outer) loop control
    - Next descriptor pointer
  - The descriptor pointer position for each channel is stored in the register

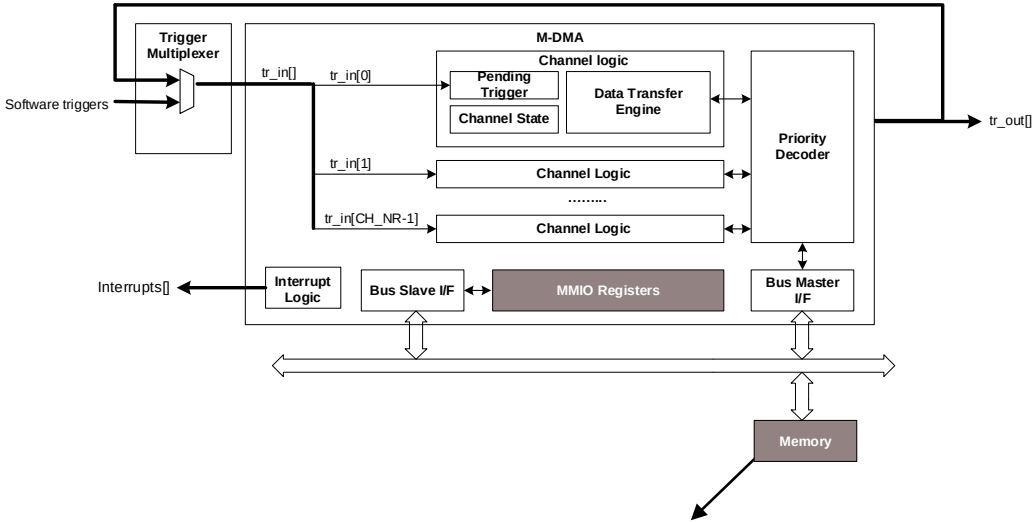

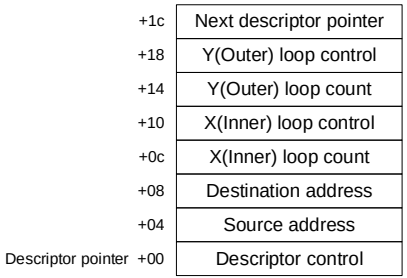

Hint Bar

Review TRM section 7.2.6 and Register TRM for additional details

Descriptor size is different from P-DMA, but the setting items are the same

System RAM is used as a memory to store the descriptor

[1] This is different from P-DMA.

Copyright © Infineon Technologies AG 2022. All rights reserved.

Descriptor type (1/3)

- Memory copy
  - One-dimensional “for loop” transfer
  - Uses five-word descriptor[1]
  - Transfer example:
    for (X_IDX =0; X_IDX <= X_COUNT; X_IDX+){
    DST_ADDR[IDX] = SRC_ADDR[IDX]
    }
- Use case: Interrupt vector copy or program copy for RAM execution
  1. Activate M-DMA by software trigger
  2. Copy the data from Flash to SRAM
  3. Generate interrupt to CPU

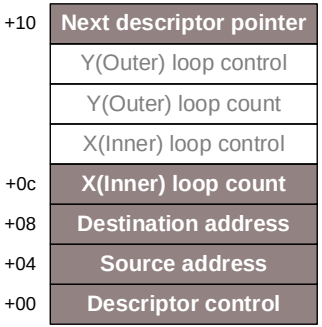

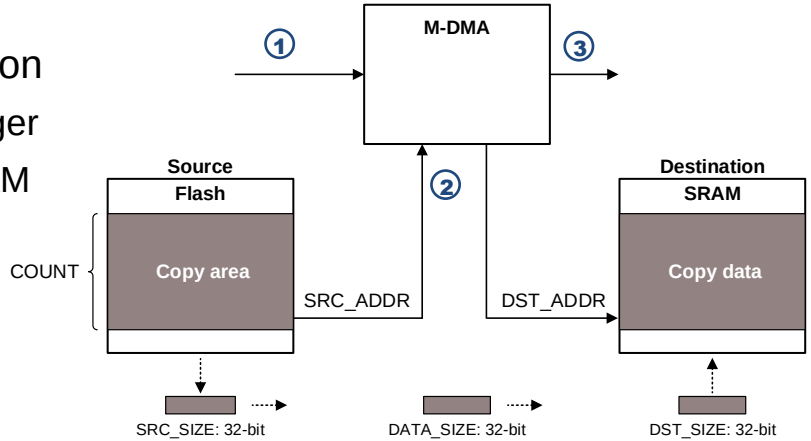

Hint Bar

Review TRM section 7.2.3 and Register TRM for additional details

[1] SRC_SIZE, DST_SIZE, and DATA_SIZE fields are not used for memory copy. Memory copy transfers the number of bytes specified by X Loop Count in the optimum size. For example, when “Source Address” = 0x08000001, “X Loop Count” = 10, first transfer size is 8-bit, second transfer size is 16-bit, and third transfer size is 32-bit.

Copyright © Infineon Technologies AG 2022. All rights reserved.

Descriptor type (2/3)

- Scatter
  - Writes a set of 32-bit data elements, which has addresses “scattered” around
  - Writes the specified data to the specified address
  - Uses four-word descriptors[1]
  - Transfer example:

```
for (X_IDX =0; X_IDX <= X_COUNT; X_IDX +=2){
    address  = SRC_ADDR[IDX]
    data     = SRC_ADDR[IDX+1]

    *address = data
}
```

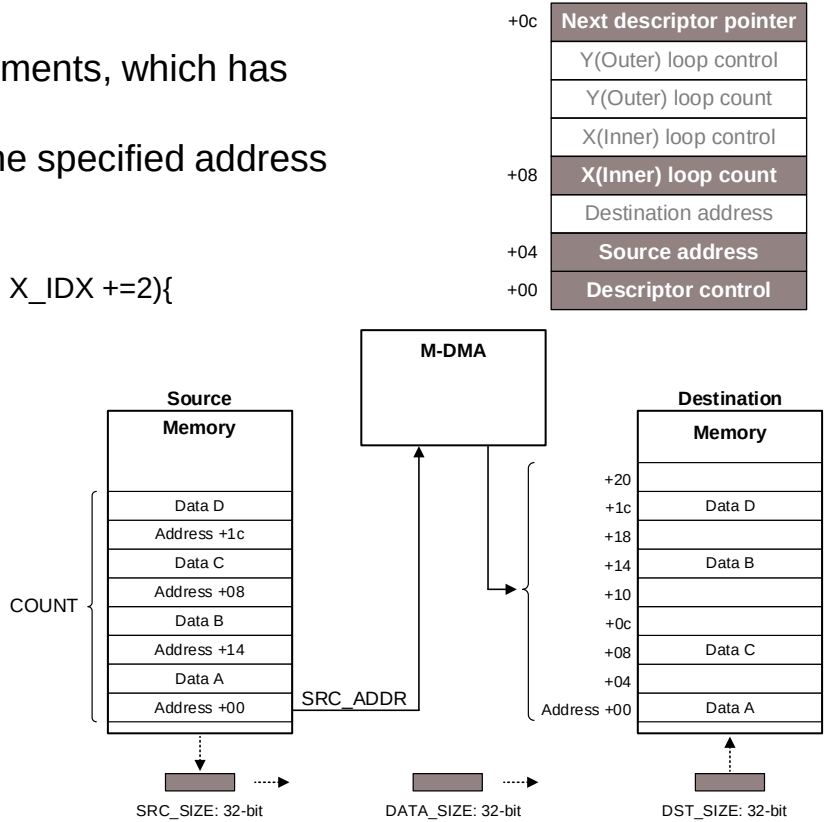

Hint Bar

Review TRM section 7.2.3 and Register TRM for additional details

[1] SRC_SIZE, DST_SIZE must be set to word (32-bit) for scatter.

Copyright © Infineon Technologies AG 2022. All rights reserved.

Descriptor type (3/3)

- Use case: Quick initial setting or setting change of peripheral registers without CPU
  1. Write the address and data to be set in the peripheral to the memory
  2. Activate M-DMA using software trigger
  3. Write the data from the memory to peripheral registers
  4. Generate an interrupt to CPU when the transfer is complete

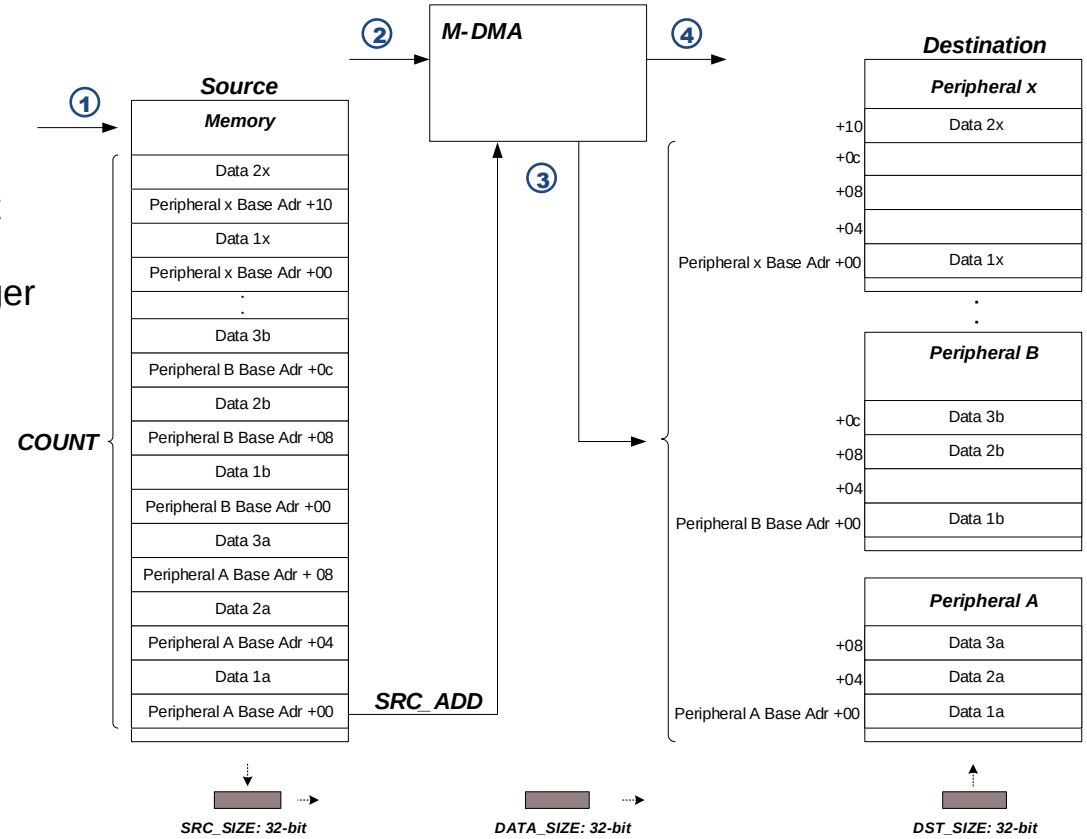

Copyright © Infineon Technologies AG 2022. All rights reserved.



Part of your life. Part of tomorrow.

Copyright © Infineon Technologies AG 2022. All rights reserved.

Revision History

Revision	ECN	Submission Date	Description of Change
**	7769084	2022-06-01	Initial release

Copyright © Infineon Technologies AG 2022. All rights reserved.