Errata Sheet

Rel. 1.4, 2016-11

Device	**XMC1300**
Marking/Step	**EES-AB, ES-AB, AB**
Package	**PG-TSSOP-16/28/38, PG-VQFN-24/40**

Overview

This “Errata Sheet” describes product deviations with respect to the user documentation listed below.

Table 1 Current User Documentation

Document	Version	Date
XMC1300 Reference Manual AB-step	V1.3	Aug 2016
XMC1300 Data Sheet AB-step	V1.8	Sep 2016

Make sure that you always use the latest documentation for this device listed in category “Documents” at **http://www.infineon.com/xmc1000**.

Notes

1. *The errata described in this sheet apply to all temperature and frequency versions and to all memory size and configuration variants of affected devices, unless explicitly noted otherwise.*
2. *Devices marked with EES or ES are engineering samples which may not be completely tested in all functional and electrical characteristics, therefore they must be used for evaluation only. The specific test conditions for EES and ES are documented in a separate “Status Sheet”.*

Subject to Agreement on the Use of Product Information

Conventions used in this Document

Each erratum is identified by **Module_Marker**.**TypeNumber**:

- **Module**: Subsystem, peripheral, or function affected by the erratum.
- **Marker**: Used only by Infineon internal.
- **Type**: type of deviation
  - **(none)**: Functional Deviation
  - **P**: Parametric Deviation
  - **H**: Application Hint
  - **D**: Documentation Update
- **Number**: Ascending sequential number. As this sequence is used over several derivatives, including already solved deviations, gaps inside this enumeration can occur.

Subject to Agreement on the Use of Product Information

1 History List / Change Summary

Table 2 History List

Version	Date	Remark
1.4	2016-11	This Document. Changes see column “Chg” in the table below.

Table 3 Errata fixed in this step

Errata	Short Description	Change
ADC_AI.003	Additonal bit to enable ADC function	Fixed
ADC_AI.004	ADC Calibration Weakness	Fixed
ADC_AI.010	ADC Operating Range	Fixed
ADC_AI.013	Sigma-Delta Loop	Fixed
ADC_AI.014	Wrong Result of Conversion in Cancel-Inject-Repeat Mode	Fixed
ADC_AI.015	Sporadic Result Errors when Operated in Low Voltage Range	Fixed
BCCU_CM.001	Channel output not switched to passive level when channel is disabled	Fixed
BCCU_CM.002	No interrupt generated when software trap is triggered via EVFSR.TPS	Fixed
BCCU_CM.003	Channel shadow transfer bit is cleared on wrong clock	Fixed
BCCU_CM.004	Dimming engine shadow transfer bit is cleared on wrong clock	Fixed
BCCU_CM.005	Disallowed ONCMP-OFFCMP combinations	Fixed
BCCU_CM.006	No packer trigger for stable signal if channel is configured for falling edge trigger	Fixed
BCCU_CM.007	Shadow process with dithering may not reach target level if follows a bypass shadow process	Fixed

Subject to Agreement on the Use of Product Information

Table 3 Errata fixed in this step (cont'd)

Errata	Short Description	Change
BCCU_CM.010	Shadow process with dithering may not reach target level if dimming level is previously set to 1-127	Fixed
BCCU_CM.011	Trigger mode 1 cannot be used with trigger delay	Fixed
CCU8_AI.002	CC82 Timer of the CCU8x module cannot use the external shadow transfer trigger connected to the POSIFx module	Fixed
CCU8_AI.004	CCU8 output PWM glitch when using low side modulation via the Multi Channel Mode	Fixed
Firmware_CM.001	User routine _NvmProgVerify stalls the system bus for two to three maximum 10 µs periods	Fixed
PORTS_CM.004	Outputs of CCU4, BCCU and ACMP cannot be used to effectively control the pull devices on Pin	Fixed
SCU_CM.010	Handling of Master Reset via bit RSTCON.MRSTEN	Fixed
SCU_CM.011	Incomplete Initialisation after a System Reset	Fixed
SCU_CM.012	Calibrating DCO based on Temperature Sensor	Removed
SCU_CM.013	Brownout reset triggered by External Brownout Detector (BDE)	Fixed
SCU_CM.014	Temperature Sensor User Routines in ROM	Fixed
SCU_CM.016	Usage of Offset Formulae for DCO Calibration based on Temperature	Fixed
ADC_AI.P002	DC Switching Level (VODC) of Out of Range Comparator	Fixed
BCCU_CM.H002	BCCU clocks may not freeze in Suspend Mode	Fixed

Table 3 Errata fixed in this step (cont'd)

Errata	Short Description	Change
BCCU_CM.H003	Dimming engine output not cleared upon disabling of dimming engine	Fixed
Firmware_CM.H001	Switching to high baudrates in enhanced ASC BSL	Fixed
NVM_CM.H001	Adding a wait loop to stand-alone verification sequences	Fixed

Table 4 Functional Deviations

Functional Deviation	Short Description	XMC1301	XMC1302	Chg	Pg
ACMP_CM.001	Operating range of the Analog Comparator Reference Divider function	X	X		9
ADC_AI.008	Wait-for-Read condition for register GLOBRES not detected in continuous auto-scan sequence	X	X		9
ADC_AI.016	No Channel Interrupt in Fast Compare Mode with GLOBRES	X	X		10
BCCU_CM.008	Linear walk starts with a delay after an aborted linear walk		X		10
BCCU_CM.009	Dimming level not immediately changed for first dimming operation		X		11
CCU_AI.005	CCU4 and CCU8 External IP clock Usage	X	X		11
CCU_AI.006	Value update not usable in period dither mode	X	X		12
CCU_AI.008	Clock ratio limitation when using MCSS inputs	X	X	New	13

Table 4 Functional Deviations (cont'd)

Functional Deviation	Short Description	XMC1301	XMC1302	Chg	Pg
CCU8_AI.003	CCU8 Parity Checker Interrupt Status is cleared automatically by hardware	X	X		14
CCU8_AI.006	Timer concatenation does not work when using external count signal	X	X	New	16
CPU_CM.002	Watchpoint PC functions can report false execution	X	X		17
CPU_CM.003	Prefetch faulting instructions can erroneously trigger breakpoints	X	X		19
Firmware_CM.002	Calculate Target Level for Temperature Comparison User Routine returns zero for valid temperature input parameter	X	X		19
Firmware_CM.004	SSC BSL is not supported	X	X	New	20
Firmware_CM.005	Last byte of SRAM is not available for ASC BSL	X	X	New	20
Firmware_CM.006	Header resend not supported for incorrect ASC BSL header byte	X	X	New	20
NVM_CM.001	NVM Write access to trigger NVM erase operation must NOT be executed from NVM	X	X		21
NVM_CM.002	Completion of NVM verify-only operations do not trigger NVM interrupt	X	X		22
POSIF_AI.001	Input Index signal from Rotary Encoder is not decoded when the length is 1/4 of the tick period	X	X		22

Table 4 Functional Deviations (cont'd)

Functional Deviation	Short Description	XMC1301	XMC1302	Chg	Pg
SCU_CM.019	Temperature Sensor User Routines in ROM	X	X		24
USIC_AI.008	SSC delay compensation feature cannot be used	X	X	New	25
USIC_AI.014	No serial transfer possible while running capture mode timer	X	X		25
USIC_AI.017	Clock phase of data shift in SSC slave cannot be changed	X	X		25
USIC_AI.018	Clearing PSR.MSLS bit immediately deasserts the SELOx output signal	X	X		26
WDT_CM.001	No overflow is generated for WUB default value	X	X	New	26

Table 5 Application Hints

Hint	Short Description	XMC1301	XMC1302	Chg	Pg
ACMP_CM.H001	Analog Comparator internal connection	X	X		28
ACMP_CM.H002	Disabling the ORC	X	X	New	28
ADC_AI.H006	Ratio of Module Clock to Converter Clock	X	X		28
ADC_AI.H007	Ratio of Sample Time t_S to SHS Clock f_{SH}	X	X		29
BCCU_CM.H001	Additional dimming clocks after dimming curve switch		X		30

Table 5 Application Hints (cont'd)

Hint	Short Description	XMC1301	XMC1302	Chg	Pg
BCCU_CM.H004	Packer threshold (CHCONFIGy.PKTH) accepted values		X		30
BCCU_CM.H005	Enable a dimming engine for global dimming		X		30
Firmware_CM.H002	Ensuring correct selection of RxD Pin in ASC Bootstrap Loader	X	X		31
SCU_CM.H001	Temperature Sensor Functionality	X	X		31
USIC_AI.H004	I2C slave transmitter recovery from deadlock situation	X	X		31

Table 6 Documentation Updates

Hint	Short Description	XMC1301	XMC1302	Chg	Pg
ADC_CM.D001	Definition of trigger bus bits in register OCS is wrong	X	X	New	33
SCU_CM.D001	SCU_CM.D001	X	X		33
STARTUP_CM.D001	SSC Bootstrap Loader Identification Byte is documented wrong	X	X	New	34
WDT_CM.D001	Correction to section "Pre-warning Mode"	X	X	New	34

Subject to Agreement on the Use of Product Information

2 Functional Deviations

The errata in this section describe deviations from the documented functional behavior.

ACMP_CM.001 Operating range of the Analog Comparator Reference Divider function

The Analog Comparator Reference Divider function is not available when V_{DDP} is below 3 V. To use this function, V_{DDP} must be between 3 V to 5.5 V.

Workaround

None

ADC_AI.008 Wait-for-Read condition for register GLOBRES not detected in continuous auto-scan sequence

In the following scenario:

- A continuous auto-scan is performed over several ADC groups and channels by the Background Scan Source, using the global result register (GLOBRES) as result target (GxCHCTRy.RESTBS=1_B), and
- The Wait-for-Read mode for GLOBRES is enabled (GLOBCR.WFR=1_B),

each conversion of the auto-scan sequence has to wait for its start until the result of the previous conversion has been read out of GLOBRES.

When the last channel of the auto-scan is converted and its result written to GLOBRES, the auto-scan re-starts with the highest channel number of the highest ADC group number. But the start of this channel does not wait until the result of the lowest channel of the previous sequence has been read from register GLOBRES, i.e. the result of the lowest channel may be lost.

Workaround

If either the last or the first channel in the auto-scan sequence does not write its result into GLOBRES, but instead into its group result register (selected via bit

GxCHCTRy.RESTBS=0_B), then the Wait-for-Read feature for GLOBRES works correctly for all other channels of the auto-scan sequence.

For this purpose, the auto-scan sequence may be extended by a “dummy” conversion of group x/ channel y, where the Wait-for-Read mode must not be selected (GxRCRy.WFR=0_B) if the result of this “dummy” conversion is not read.

ADC_AI.016 No Channel Interrupt in Fast Compare Mode with GLOBRES

In fast compare mode, the compare value is taken from bitfield RESULT of the selected result register and the result of the comparison is stored in the respective bit FCR.

A channel event can be generated when the input becomes higher or lower than the compare value.

In case the global result register GLOBRES is selected, the comparison is executed correctly, the target bit is stored correctly, source events and result events are generated, but a channel event is not generated.

Workaround

If channel events are required, choose a local result register GxRESy for the operation of the fast compare channel.

BCCU_CM.008 Linear walk starts with a delay after an aborted linear walk

If a linear walk is previously aborted, the subsequent linear walk starts with a delay. The maximum delay is one linear clock.

Workaround

None.

Subject to Agreement on the Use of Product Information

BCCU_CM.009 Dimming level not immediately changed for first dimming operation

For the first dimming operation, the dimming level is not immediately incremented or decremented upon a shadow bit (DES) assertion.

Workaround

None.

CCU_AI.005 CCU4 and CCU8 External IP clock Usage

Each CCU4/CCU8 module offers the possibility of selecting an external signal to be used as the master clock for every timer inside the module Figure 1. External signal in this context is understood as a signal connected to other module/IP or connected to the device ports.

The user has the possibility after selecting what is the clock for the module (external signal or the clock provided by the system), to also select if this clock needs to be divided. The division ratios start from 1 (no frequency division) up to 32768 (where the selected timer uses a frequency of the selected clock divided by 32768).

This division is selected by the PSIV field inside of the CC4yPSC/CC8yPSC register. Notice that each Timer Slice (CC4y/CC8y) have a specific PSIV field, which means that each timer can operate in a different frequency.

Currently is only possible to use an external signal as Timer Clock when a division ratio of 2 or higher is selected. When no division is selected (divided by 1), the external signal cannot be used.

The user must program the PSIV field of each Timer Slice with a value different from 0000_B - minimum division value is /2.

This is only applicable if the Module Clock provided by the system (the normal default configuration and use case scenario) is not being used. In the case that the normal clock configured and programmed at system level is being used, there is not any type of constraints.

Subject to Agreement on the Use of Product Information

One should not also confuse the usage of an external signal as clock for the module with the usage of an external signal for counting. These two features are completely unrelated and there are not any dependencies between both.

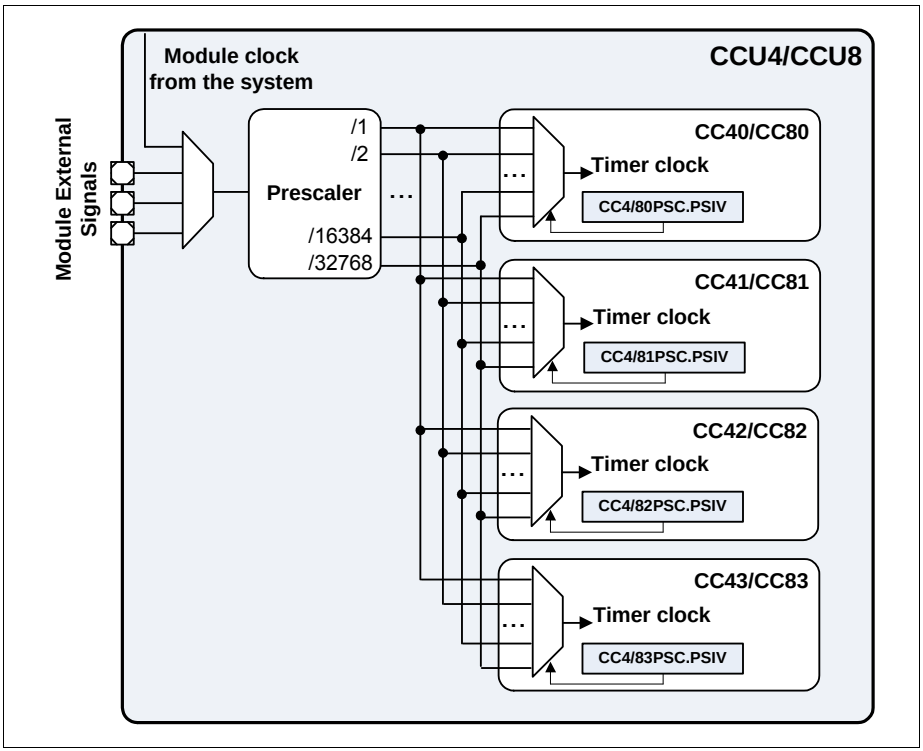

Figure 1 Clock Selection Diagram for CCU4/CCU8

Workaround

None.

CCU_AI.006 Value update not usable in period dither mode

Each CCU4/CCU8 timer gives the possibility of enabling a dither function, that can be applied to the duty cycle and/or period. The duty cycle dither is done to

increase the resolution of the PWM duty cycle over time. The period dither is done to increase the resolution of the PWM switching frequency over time.

Each of the dither configurations is set via the DITHE field:

- DITHE = 00_B - dither disabled
- DITHE = 01_B - dither applied to the duty-cycle (compare value)
- DITHE = 10_B - dither applied to the period (period value)
- DITHE = 11_B - dither applied to the duty-cycle and period (compare an period value)

Whenever the dither function is applied to the period (DITHE = 10_B or DITHE = 11_B) and an update of the period value is done via a shadow transfer, the timer can enter a stuck-at condition (stuck at 0).

Implication

Period value update via shadow transfer cannot be used if dither function is applied to the period (DITHE programmed to 10_B or 11_B).

Workaround

None

CCU_AI.008 Clock ratio limitation when using MCSS inputs

The MCSS input signals of CCU8 and CCU4 units are erroneously sampled with the AHB bus clock f_{PERIPH} instead of the module clock f_{CCU}.

Implication

If the f_{PERIPH} and f_{CCU} frequencies are programmed to a ratio different from 1:1 then the MCSS signals running from POSIF to CCU4/CCU8 are not correctly sampled by CCU8/CCU4.

This can for example affect brushless DC motor drive applications when a clock ratio different from 1:1 is required.

Workaround

None

Subject to Agreement on the Use of Product Information

CCU8_AI.003 CCU8 Parity Checker Interrupt Status is cleared automatically by hardware

Each CCU8 Module Timer has an associated interrupt status register. This Status register, CC8yINTS, keeps the information about which interrupt source triggered an interrupt. The status of this interrupt source can only be cleared by software. This is an advantage because the user can configure multiple interrupt sources to the same interrupt line and in each triggered interrupt routine, it reads back the status register to know which was the origin of the interrupt.

Each CCU8 module also contains a function called Parity Checker. This Parity Checker function, crosschecks the output of a XOR structure versus an input signal, as seen in Figure 1.

When using the parity checker function, the associated status bitfield, is cleared automatically by hardware in the next PWM cycle whenever an error is not present.

This means that if in the previous PWM cycle an error was detected and one interrupt was triggered, the software needs to read back the status register before the end of the immediately next PWM cycle.

This is indeed only necessary if multiple interrupt sources are ORed together in the same interrupt line. If this is not the case and the parity checker error source is the only one associated with an interrupt line, then there is no need to read back the status information. This is due to the fact, that only one action can be triggered in the software routine, the one linked with the parity checker error.

Subject to Agreement on the Use of Product Information

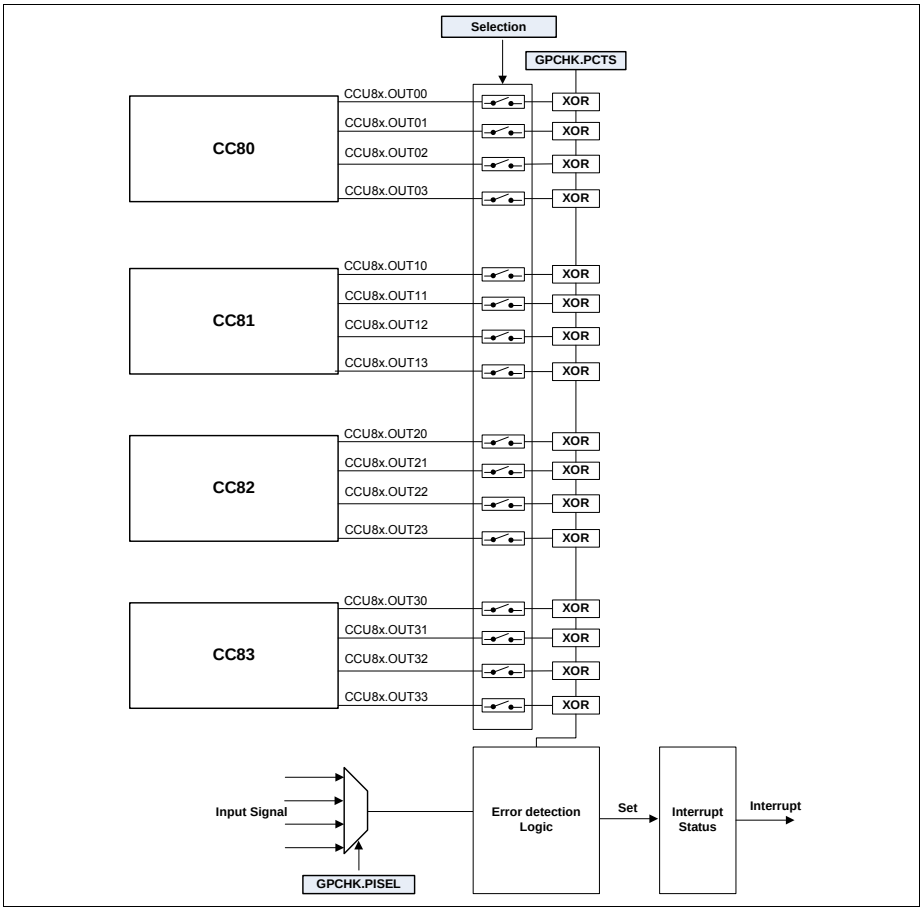

Figure 2 Parity Checker diagram

Workaround

Not ORing the Parity Checker error interrupt with any other interrupt source. With this approach, the software does not need to read back the status information to understand what was the origin of the interrupt - because there is only one source.

CCU8_AI.006 Timer concatenation does not work when using external count signal

Each CCU8 peripheral contains four sixteen bit timers. It is possible nevertheless to concatenate multiple timers to achieve a timer/counter with 32, 48 or 64 bits. To enable the concatenation feature, the CC8yCMC.TCE bitfield needs to be set to 1_B - Figure 1 a), where CCU8x represents a CCU8 peripheral instance x, and CC80 and CC81, represents timer 0 and timer 1 respectively (please notice that CC80 and CC81 are just used for simplicity, meaning that this function can be used also with the other timers inside CCU8x).

It is also possible to use an external signal as a count trigger. This means that when using an external count signal, the LSB timer is incremented each time that a transition on this external signal occurs - Figure 1 b).

When an external count signal is enabled - by programming the CC8yCMC.CNTS with 01_B, 10_B or 11_B - the concatenation function does not work. One cannot use in parallel the timer concatenation and external count signal features.

Note: On Figure 1, the count signal is used in CCU80 because this timer represents the LSBs. While the count signal could be enabled in the MSB timer (CC81), this does not make sense when the timers are concatenate - because the count should be used to increment the LSB timer. The LSB timer will then in each wrap around, increment the MSB timer.

Subject to Agreement on the Use of Product Information

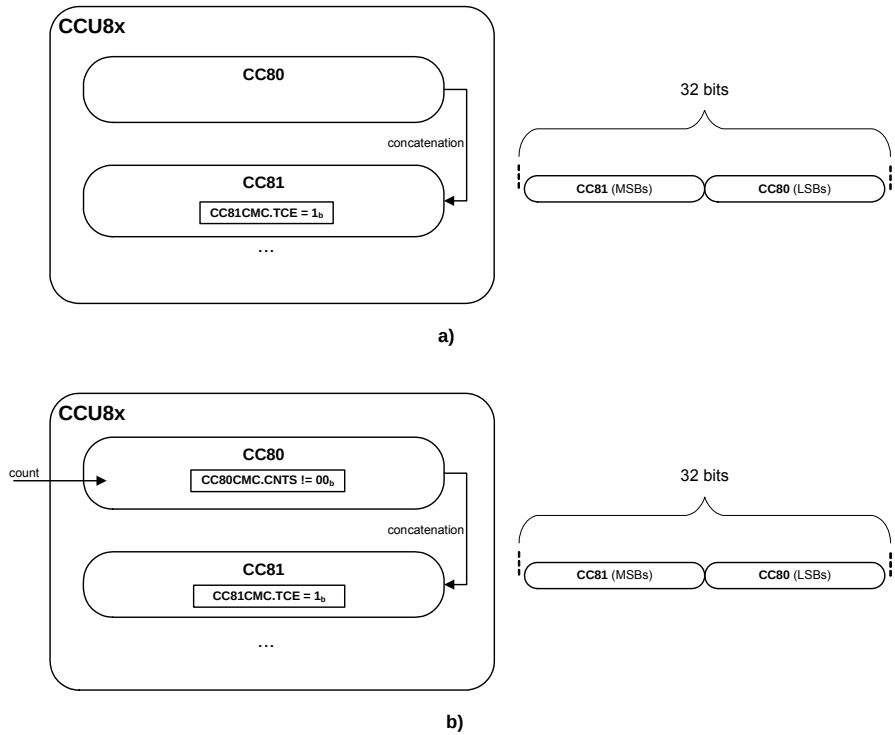

Figure 3 CCU8x concatenation feature resource configuration - a) without external count function; b) with external count function

Workaround

None

CPU_CM.002 Watchpoint PC functions can report false execution

In the presence of interrupts including those generated by the SVC instruction, it is possible for both the data watchpoint unit's PC match facility and PC

sample-register to operate as though the instruction immediately following the interrupted or SVC instruction had been executed.

Conditions

Either:

1. Halting debug is enabled via C_DEBUGEN = 1
2. Watchpoints are enabled via DWTENA = 1
3. A watchpoint is configured for PC sampling DWT_FUNCTION = 0x4
4. The same watchpoint is configured to match a `target instruction`
5. And either:
   a) The `target instruction` is interrupted before execution, or
   b) The `target instruction` is preceded by a taken SVC instruction
6. The DWT will unexpectedly match the `target instruction`
7. The processor will unexpectedly enter debug state once inside the exception handler

Or:

1. The debugger performs a read access to the DWT_PCSR
2. A `non-committed instruction` is preceded by a taken SVC instruction
3. The DWT_PCSR value unexpectedly matches the `non-committed instruction`

Implications

If halting debug is enabled and PC match watchpoints are being used, then spurious entry into halted debug state may occur under the listed conditions.

If the DWT_PCSR is being used for coarse grain profiling, then it is possible that the results can include hits for the address of an instruction immediately after an SVC instruction, even if said instruction is never executed.

Workaround

This errata does not impact normal execution of the processor.

A debug agent may choose to handle the infrequent false positive Debug state entry and erroneous PCSR values as spurious events.

CPU_CM.003 Prefetch faulting instructions can erroneously trigger breakpoints

External prefetch aborts on instruction fetches on which a BPU breakpoint has been configured, will cause entry to Debug state. This is prohibited by revision C of the ARMv6-M Architecture Reference Manual. Under this condition, the breakpoint should be ignored, and the processor should instead service the prefetch-abort by entering the HardFault handler.

Conditions

1. Halting debug is enabled via CDEBUG_EN == '1'
2. A BPU breakpoint is configured on an instruction in the first 0.5GB of memory
3. The fetch for said instruction aborts via an AHB Error response
4. The processor will erroneously enter Debug state rather than entering HardFault.

Implications

If halting debug is enabled and a BPU breakpoint is placed on an instruction with faults due to an external abort, then a non-compliant entry to Debug state will occur.

Workaround

This errata does not impact normal execution of the processor.

A debug agent may choose to avoid placing BPU breakpoints on addresses that generate AHB Error responses, or may simply handle the Debug state entry as a spurious debug event.

Firmware_CM.002 Calculate Target Level for Temperature Comparison User Routine returns zero for valid temperature input parameter

In Calculate Target Level for Temperature Comparison User Routine in Firmware, the temperature sensor threshold value is expected to be returned for a valid range of temperature input parameter of 233K to 388K. This user

function typically returns zero value for input parameter out of the valid range, also for some input parameters within the valid range.

Workaround

If user function returns zero for input parameter within the valid range, increase or decrease the input parameter by 1 degree Kelvin in order to use this user function.

Firmware_CM.004 SSC BSL is not supported

SSC Bootstrap Loader start-up mode is not supported for EES and ES samples.

Workaround

None.

Firmware_CM.005 Last byte of SRAM is not available for ASC BSL

For start-up mode selection of ASC BSL and ASC BSL with timeout modes, the last byte of available SRAM is not available for user application code.
Application length error (BSL_NOK) is transmitted back to the host for application code length of available SRAM size.

Workaround

Host to send application code length of available SRAM size - 1 Byte or less.

Firmware_CM.006 Header resend not supported for incorrect ASC BSL header byte

For start-up mode selection of ASC BSL and ASC BSL with timeout modes, the baud rate detection is performed based on the Start Byte (00_H) received from the host. Next, the Header Byte defined in **Table 7** is expected from the host.

An incorrect Header Byte received leads to a hang-up of the device.

Table 7 Header Byte definition in ASC BSL

Name	Length, Byte	Value	Description
Data sent by the Host:			
BSL_ASC_F	1	$6C_H$	Header requesting full duplex ASC mode with the current baud rate
BSL_ASC_H	1	12_H	Header requesting half duplex ASC mode with the current baud rate
BSL_ENC_F	1	93_H	Header requesting full duplex ASC mode with a request to switch the baud rate
BSL_ENC_H	1	ED_H	Header requesting half duplex ASC mode with a request to switch the baud rate

Workaround

None.

NVM_CM.001 NVM Write access to trigger NVM erase operation must NOT be executed from NVM

When the NVM write access to trigger an NVM erase operation is executed from NVM, the erase operation is not always executed.

Implications

This issue only affects the NVM operation ERASE. The remaining NVM operations WRITE and VERIFY are not affected.

Workaround

When implementing the Low-Level Programming Routines, the programmer has to take care that the write access to the NVM that is triggering the ERASE operation is not executed from NVM.

It is recommended to use always the NVM user routines provided in the ROM, especially for NVM erase.

NVM_CM.002 Completion of NVM verify-only operations do not trigger NVM interrupt

The completion of either one-shot or continuous verify-only operation (NVMPROG.ACTION = $D0_H$ or $E0_H$ respectively) does not trigger the NVM interrupt, contrary to specifications.

Implications

The NVM interrupt cannot be used to detect for the end of verify-only operations.

Workaround

To detect for the end of verify-only operations, poll the register bit NVMSTATUS.BUSY to be 0 after the specific verify-only operation has started.

POSIF_AI.001 Input Index signal from Rotary Encoder is not decoded when the length is 1/4 of the tick period

Each POSIF module can be used as an input interface for a Rotary Encoder. It is possible to configure the POSIF module to decode 3 different signals: Phase A, Phase B (these two signals are 90° out of phase) and Index. The index signal is normally understood as the marker for the zero position of the motor Figure 1.

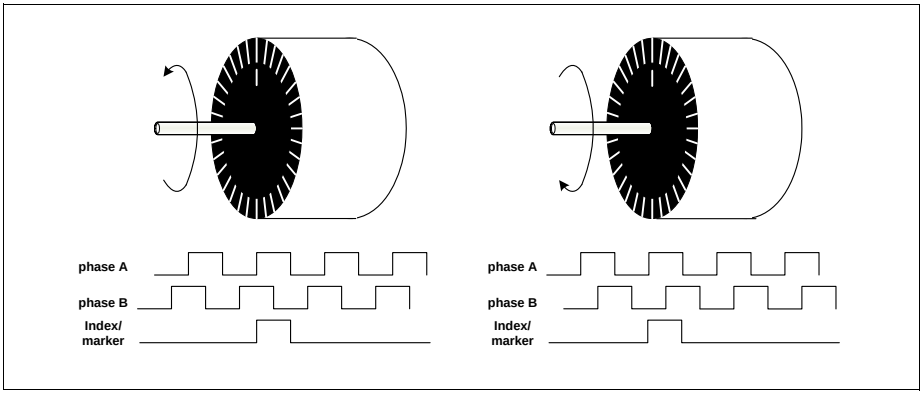

Figure 4 Rotary Encoder outputs - Phase A, Phase B and Index

Subject to Agreement on the Use of Product Information

There are several types of Rotary Encoder when it comes to length of the index signal:

- length equal or bigger than 1 tick period
- length equal or bigger than 1/2 tick period
- length equal or bigger than 1/4 tick period

When the index signal is smaller than 1/2 of the tick period, the POSIF module is not able to decode this signal properly, Figure 2 - notice that the reference edge of the index generation in this figure is the falling of Phase B, nevertheless this is an example and depending on the encoder type, this edge may be one of the other three.

Due to this fact it is not possible to use the POSIF to decode these type of signals (index with duration below 1/2 of the tick period).

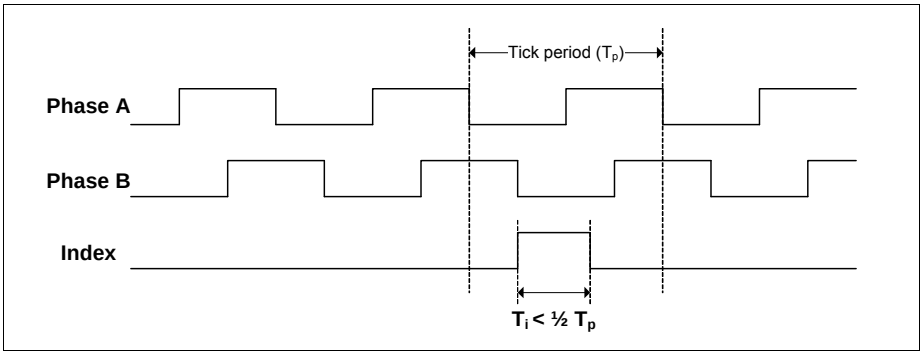

Figure 5 Different index signal types

Workaround

To make usage of the Index signal, when the length of this signal is less than 1/2 of the tick period, one should connect it directly to the specific counter/timer. This connection should be done at port level of the device (e.g. connecting the device port to the specific Timer/Counter(s)), Figure 3.

Subject to Agreement on the Use of Product Information

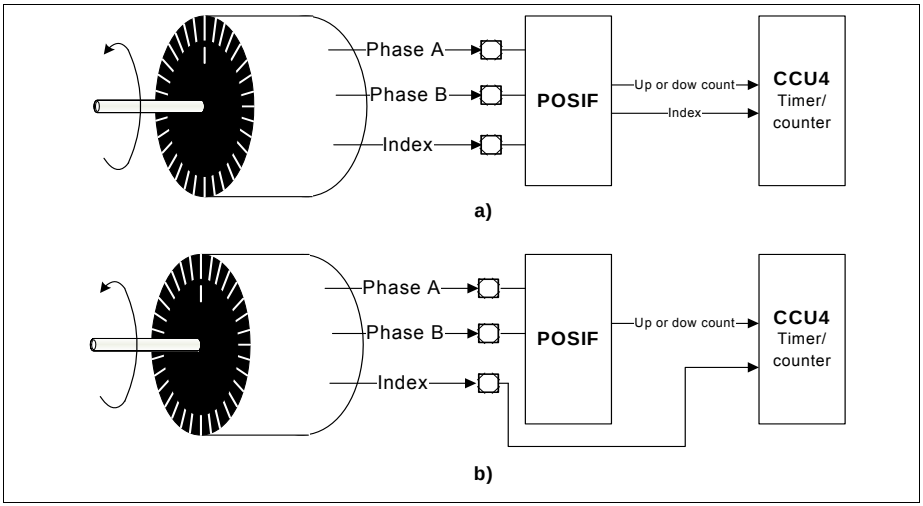

Figure 6 Index usage workaround - a) Non working solution; b) Working solution

SCU_CM.019 Temperature Sensor User Routines in ROM

These temperature sensor user routines in ROM cannot be used for EES and partial ES. For ES, the affected devices are identifiable through a 2-byte User Configuration Sector version 0002_H, stored in Flash Configuration Sector 0 (CS0), address $10000FEA_H$.

- Calculate Chip Temperature
- Calculate Target Level for Temperature Comparison

Workaround

Library functions are available and the details of these functions can be found in the Temperature Sensor Application Notes.

Subject to Agreement on the Use of Product Information

USIC_AI.008 SSC delay compensation feature cannot be used

SSC master mode and complete closed loop delay compensation cannot be used. The bit DX1CR.DCEN should always be written with zero to disable the delay compensation.

Workaround

None.

USIC_AI.014 No serial transfer possible while running capture mode timer

When the capture mode timer of the baud rate generator is enabled (BRG.TMEN = 1) to perform timing measurements, no serial transmission or reception can take place.

Workaround

None.

USIC_AI.017 Clock phase of data shift in SSC slave cannot be changed

Setting PCR.SLPHSEL bit to 1 in SSC slave mode is intended to change the clock phase of the data shift such that reception of data bits is done on the leading SCLKIN clock edge and transmission on the other (trailing) edge.

However, in the current implementation, the feature is not working.

Workaround

None.

Subject to Agreement on the Use of Product Information

USIC_AI.018 Clearing PSR.MSLS bit immediately deasserts the SELOx output signal

In SSC master mode, the transmission of a data frame can be stopped explicitly by clearing bit PSR.MSLS, which is achieved by writing a 1 to the related bit position in register PSCR.

This write action immediately clears bit PSR.MSLS and will deassert the slave select output signal SELOx after finishing a currently running word transfer and respecting the slave select trailing delay (T_{td}) and next-frame delay (T_{nf}).

However in the current implementation, the running word transfer will also be immediately stopped and the SELOx deasserted following the slave select delays.

If the write to register PSCR occurs during the duration of the slave select leading delay (T_{ld}) before the start of a new word transmission, no data will be transmitted and the SELOx gets deasserted following T_{td} and T_{nf}.

Workaround

There are two possible workarounds:

- Use alternative end-of-frame control mechanisms, for example, end-of-frame indication with TSCR.EOF bit.
- Check that any running word transfer is completed (PSR.TSIF flag = 1) before clearing bit PSR.MSLS.

WDT_CM.001 No overflow is generated for WUB default value

The Window Watchdog Timer (WDT) does not generate an overflow event if the default counter value $FFFFFFFF_H$ is used in register WUB.

Implications

Without an timer overflow no reset or pre-warning is requested. For other WUB values the WDT operates correctly and a reset or pre-warning is requested upon WDT overflow.

Subject to Agreement on the Use of Product Information

Workaround

Do not use $FFFFFFFF_H$ as counter value.

3 Application Hints

The errata in this section describe application hints which must be regarded to ensure correct operation under specific application conditions.

ACMP_CM.H001 Analog Comparator internal connection

The internal switch connects comparator pads ACMP0.INN to ACMP1.INP when ANACMP0.ACMP0_SEL is set to 1_B.

ACMP_CM.H002 Disabling the ORC

When the ORC is disabled while detecting an overvoltage, i.e. while its output signal is high, the output will not always return to zero, but may remain high after disabling.It is therefore recommended to disable the connected units (ERU, interrupt generation) before disabling the corresponding out-of-range comparator.

ADC_AI.H006 Ratio of Module Clock to Converter Clock

For back-to-back conversions, the ratio between the module clock f_{ADC} and the converter clock f_{SH} must meet the limits listed in **Table 8**.

Otherwise, when the internal bus clock $f_{ADC} = f_{MCLK}$ is too slow in relation to the converter clock f_{SH}, the internal result buffer may be overwritten with the result of the next conversion c_2 before the result of the previous conversion c_1 has been transferred to the specified result register.

Subject to Agreement on the Use of Product Information

Table 8 VADC: Ratio of Module Clock to Converter Clock

Conversion Type	f_{ADC} / f_{SH} (min.)	Example for f_{SH} = f_{CONV} = 32 MHz (SHS0_SHSCFG.DIVS = 0)
10-bit Fast Compare Mode (bitfield CMS / CME = 101_B)	3/7	f_{ADC} = f_{MCLK} > 13.72 MHz
Other Conversion Modes (8/10/12-bit)	1/3	f_{ADC} = f_{MCLK} > 10.67 MHz

ADC_AI.H007 Ratio of Sample Time t_S to SHS Clock f_{SH}

The sample time t_S is programmable to the requirements of the application.

To ensure proper operation of the internal control logic, t_S must be at least four cycles of the prescaled converter clock f_{SH}, i.e. $t_S \geq 4\ t_{CONV}$ x (DIVS+1).

(1) With **SHS*_TIMCFGx.SST > 0**, the sample time is defined by

t_S = SST x t_{ADC}.

In this case, the following relation must be fulfilled:

- SST ≥ 4 x t_{CONV}/t_{ADC} x (DIVS+1), i.e. SST ≥ 4 x f_{ADC}/f_{CONV} x (DIVS+1).
  - Example:
    with the default setting DIVS=0 and f_{ADC} = f_{MCLK} = 32 MHz, f_{SH} = f_{CONV} = 32 MHz (for DIVS = 0):
    select SST ≥ 4.

(2) With **SHS*_TIMCFGx.SST = 0**, the sample time is defined by

t_S = (2+STC) x t_{ADCI}, with t_{ADCI} = t_{ADC} x (DIVA+1)

In this case, the following relation must be fulfilled:

- [(2+STC) x (DIVA+1)] / (DIVS+1) ≥ 4 x t_{CONV}/t_{ADC} = 4 x f_{ADC}/f_{CONV}.
  - Example:
    With the default settings STC=0, DIVA=1, DIVS=0 and f_{ADC} = f_{MCLK} = 32 MHz, f_{SH} = f_{CONV} = 32 MHz (for DIVS = 0),
    this relation is fulfilled.

Subject to Agreement on the Use of Product Information

Note: In addition, the condition $f_{ADC} = f_{MCLK} \geq 0.55\ f_{SH}$ must be fulfilled. Note that this requirement is more restrictive than the requirement in ADC_AI.H006.

Definitions

DIVA: Divider Factor for the Analog Internal Clock, resulting from bit field GLOBCFG.DIVA (range: $1..32_D$)

DIVS: Divider Factor for the SHS Clock, resulting from bit field SHS*_SHSCFG.DIVS (range: $1..16_D$)

STC: Additional clock cycles, resulting from bit field STCS/STCE in registers GxICLASS*, GLOBICLACSSy (range: $0..256_D$)

SST: Short Sample Time factor, resulting from bit field SHS*_TIMCFGx.SST (range: $1..63_D$)

Recommendation

Select the parameters such that the sample time t_S is at least four cycles of the prescaled converter clock f_{SH}, as described above.

BCCU_CM.H001 Additional dimming clocks after dimming curve switch

If the dimming curve is switched (from coarse to fine or vice versa), the next dimming process takes additional dimming clocks.

BCCU_CM.H004 Packer threshold (CHCONFIGy.PKTH) accepted values

CHCONFIGy.PKTH is defined as 3-bits wide. However, only values 1-4 are accepted.

BCCU_CM.H005 Enable a dimming engine for global dimming

When using global dimming as the source of dimming input (CHCONFIG.DSEL = 111_B), enable at least one of the dimming engines (DEEN != 0).

Subject to Agreement on the Use of Product Information

Firmware_CM.H002 Ensuring correct selection of RxD Pin in ASC Bootstrap Loader

To provide flexible usage in application, USIC0 channel 0 or 1 are both checked automatically as ASC Bootstrap Loader channel. To prevent possible misidentification of an ASC BSL on the wrong RxD pin, the application must ensure that only the intended pin is activated.

For example, having a capacitor on the pin of an unintended ASC BSL channel, may result in a ramping signal and false detection as the selected ASC BSL channel. Connecting a capacitor to P0.14 when P1.3 is the intended channel, or to P1.3 when P0.14 is the intended channel, must be avoided when using the ASC Bootstrap Loader.

SCU_CM.H001 Temperature Sensor Functionality

EES samples are not temperature tested, therefore the temperature sensor functionality is not supported.

Workaround

None

USIC_AI.H004 I2C slave transmitter recovery from deadlock situation

While operating the USIC channel as an IIC slave transmitter, if the slave runs out of data to transmit before a master-issued stop condition, it ties the SCL infinitely low.

Recommendation

To recover and reinitialize the USIC IIC slave from such a deadlock situation, the following software sequence can be used:

1. Switch the SCL and SDA port functions to be general port inputs for the slave to release the SCL and SDA lines:
   a) Write 0 to the two affected Pn_IOCRx.PCy bit fields.

Subject to Agreement on the Use of Product Information

2. Flush the FIFO buffer:
   a) Write 1_B to both USICx_CHy_TRBSCR.FLUSHTB and FLUSHRB bits.
3. Invalidate the internal transmit buffer TBUF:
   a) Write 10_B to USICx_CHy_FMR.MTDV.
4. Clear all status bits and reinitialize the IIC USIC channel if necessary.
5. Reprogram the Pn_IOCRx.PCy bit fields to select the SCL and SDA port functions.

At the end of this sequence, the IIC slave is ready to communicate with the IIC master again.

Subject to Agreement on the Use of Product Information

4 Documentation Updates

The errata in this section contain updates to or completions of the user documentation. These updates are subject to be taken over into upcoming user documentation releases.

ADC_CM.D001 Definition of trigger bus bits in register OCS is wrong

The definition of register OCS contains bit fields controlling the OCDS trigger bus (OTBG). This trigger bus is not available in the product.

Correction

The following bit fields of register OCS are invalid:

- TGS
- TGB
- TG_P

The definition is changed to field “0”, type “r”, description “Reserved, write 0, read as 0”.

SCU_CM.D001 DCO nominal frequencies and accuracy based on Temperature Sensor calibration

These parameters of the 64 MHz DCO1 Characteristics and 32 kHz DCO2 Characteristics tables in the XMC1000 family Data Sheet V1.4 based on AA-step are not valid for the AB-step Data Sheet.

- The accuracy of DCO1 based on temperature sensor calibration parameter, Δf_{LTT}.
- The min and max limits for DCO1 and DCO2 nominal frequency, f_{NOM} under nominal conditions after trimming. These limits are defined by the specified accuracy parameter over temperature Δf_{LT}.

Subject to Agreement on the Use of Product Information

Documentation Update

These parameters are not presented in the XMC1000 family AB-step Data Sheet V1.6. To improve the accuracy of the DCO1 oscillator, refer to XMC1000 Oscillator Handling Application Note.

STARTUP_CM.D001 SSC Bootstrap Loader Identification Byte is documented wrong

Within chapter “SSC Bootstrap Loader” the “Identification Byte” is documented wrong as “$D5_H$”.

The correct value is “$5D_H$”.

WDT_CM.D001 Correction to section "Pre-warning Mode"

Section “Pre-warning Mode” of WDT chapter in the Reference Manual states the following:

"… The alarm status is shown via register WDTSTS and can be cleared via register WDTCLR. A clear of the alarm status will bring the WDT back to normal state. The alarm signal is routed as request to the SCU, where it can be promoted to NMI. …"

Correction

The statement "A clear of the alarm status will bring the WDT back to normal state" is wrong.

A clear of the alarm status bit via write to WDTCLR.ALMC will clear only the bit WDSTSTS.ALMS.

To transfer the WDT back to the normal state a WDT service request is required.

Subject to Agreement on the Use of Product Information