RF transitors

Flexibility and reliability for long-standing RF wireless systems

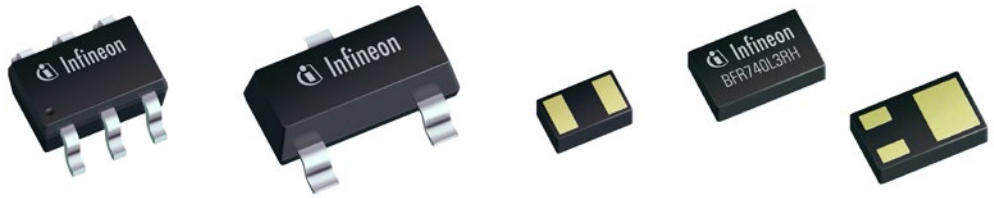

RF transistors

– Our versatile SiGe:C NPN transistor portfolio offers flexible and adaptable devices that deliver best-in-class RF performance to a wide range of market applications

Features

– Wide frequency coverage
– Low Noise Figure, high gain and linearity
– Very low power consumption
– Cost competitiveness

Target applications

– Active antenna applications
– GNSS navigation systems
– Wi-Fi routers, set-up boxes
– Applications operating <1GHz
– Home automation
– Industrial IoT applications

Benefits

– Flexible and customized circuit design
– Energy savings for extended battery life
– System cost reduction
– High quality and reliability for long-life systems



Application example: LiDAR LNA

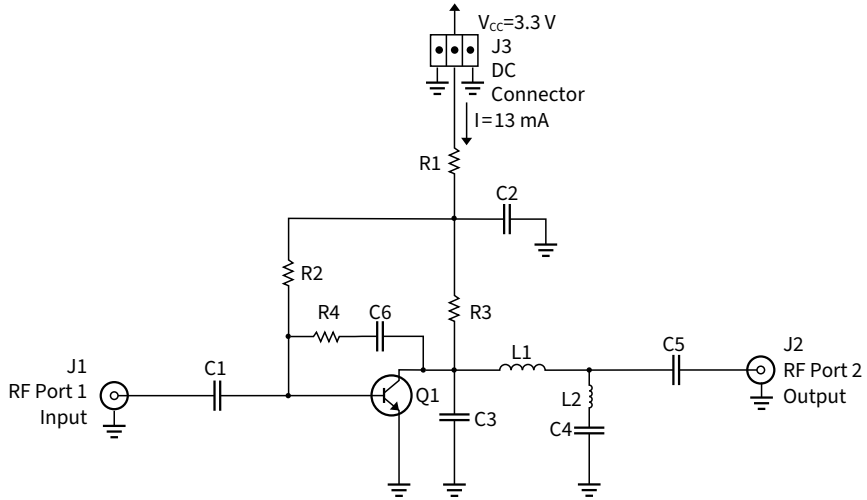

Useful links

RF transistors portfolio

S-paramter measurements for devices at different biasing levels
Infineon-RFTransistor-SPAR.zip-SM-v02_20-EN EN

Device libraries for all major simulation softwares
MWO **Infineon-RFTransistor-AWR_MWO_Design_Kit-SM-v02_10-EN EN**
ADS **Infineon-RFTransistor-Keysight_ADS_Design_Kit-SM-v02_10-EN EN**
SPICE **Infineon-RFTransistor-SPICE.lib-SM-v02_10-EN EN**