RF switches

Highest RF design flexibility and performance for wireless systems



RF switches

– Compact RF ICs for antenna selection or signal routing (Tx/Rx switching) allowing design flexibility, more features, and system optimization

Target applications

– Mobile devices, tablets, laptops
– Wearables, hearables
– Smart home appliances
– CPE, Wi-Fi / 5G routers
– M2M / IoT modules

Features

– Wideband applicable up to 9 GHz
– Fast switching speed
– Low insertion loss
– High RF power-handling +38 dBm
– MIPI and GPIO variants
– Low current consumption

Benefits

– Simplify system design
– BOM savings help reduce signal losses
– Efficient (re-)use of frequency through switching
– Increased data rates
– Power efficiency



Block diagram

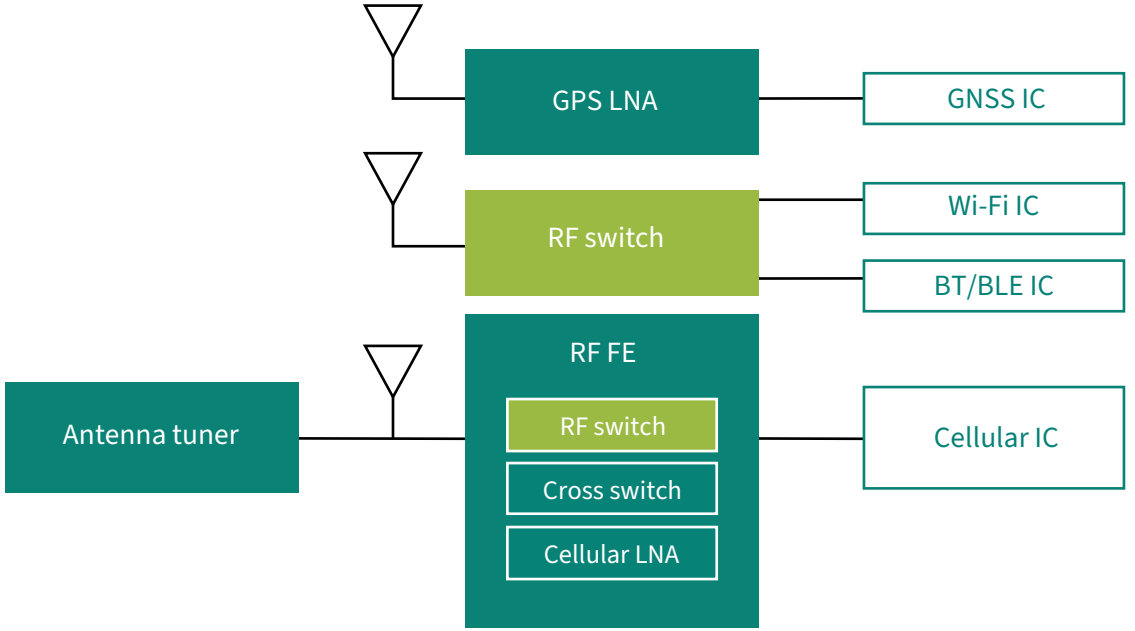

Useful links

RF switch portfolio
RF product selection guide