TVS Diode

Transient Voltage Suppressor Diodes

ESD5V3L1B Series

Bi-directional Low Capacitance ESD / Transient Protection Diode

ESD5V3L1B-02LRH
ESD5V3L1B-02LS

Data Sheet

Revision 1, 2011-08-04
Final

Industrial and Multi-Market

Edition 2011-08-04

Published by
Infineon Technologies AG
81726 Munich, Germany

© 2011 Infineon Technologies AG
All Rights Reserved.

Legal Disclaimer

The information given in this document shall in no event be regarded as a guarantee of conditions or characteristics. With respect to any examples or hints given herein, any typical values stated herein and/or any information regarding the application of the device, Infineon Technologies hereby disclaims any and all warranties and liabilities of any kind, including without limitation, warranties of non-infringement of intellectual property rights of any third party.

Information

For further information on technology, delivery terms and conditions and prices, please contact the nearest Infineon Technologies Office (**www.infineon.com**).

Warnings

Due to technical requirements, components may contain dangerous substances. For information on the types in question, please contact the nearest Infineon Technologies Office.

Infineon Technologies components may be used in life-support devices or systems only with the express written approval of Infineon Technologies, if a failure of such components can reasonably be expected to cause the failure of that life-support device or system or to affect the safety or effectiveness of that device or system. Life support devices or systems are intended to be implanted in the human body or to support and/or maintain and sustain and/or protect human life. If they fail, it is reasonable to assume that the health of the user or other persons may be endangered.

Revision History	
Page or Item	**Subjects (major changes since previous revision)**
Revision 1, 2011-08-04	
8	**Figure 3-1** have been updated.
Revision 1.0, 2011-05-04	

Trademarks of Infineon Technologies AG

AURIX™, BlueMoon™, C166™, CanPAK™, CIPOS™, CIPURSE™, COMNEON™, EconoPACK™, CoolMOS™, CoolSET™, CORECONTROL™, CROSSAVE™, DAVE™, EasyPIM™, EconoBRIDGE™, EconoDUAL™, EconoPIM™, EiceDRIVER™, eupec™, FCOS™, HITFET™, HybridPACK™, I²RF™, ISOFACE™, IsoPACK™, MIPAQ™, ModSTACK™, my-d™, NovalithIC™, OmniTune™, OptiMOS™, ORIGA™, PRIMARION™, PrimePACK™, PrimeSTACK™, PRO-SIL™, PROFET™, RASIC™, ReverSave™, SatRIC™, SIEGET™, SINDRION™, SIPMOS™, SMARTi™, SmartLEWIS™, SOLID FLASH™, TEMPFET™, thinQ!™, TRENCHSTOP™, TriCore™, X-GOLD™, X-PMU™, XMM™, XPOSYS™.

Other Trademarks

Advance Design System™ (ADS) of Agilent Technologies, AMBA™, ARM™, MULTI-ICE™, KEIL™, PRIMECELL™, REALVIEW™, THUMB™, µVision™ of ARM Limited, UK. AUTOSAR™ is licensed by AUTOSAR development partnership. Bluetooth™ of Bluetooth SIG Inc. CAT-iq™ of DECT Forum. COLOSSUS™, FirstGPS™ of Trimble Navigation Ltd. EMV™ of EMVCo, LLC (Visa Holdings Inc.). EPCOS™ of Epcos AG. FLEXGO™ of Microsoft Corporation. FlexRay™ is licensed by FlexRay Consortium. HYPERTERMINAL™ of Hilgraeve Incorporated. IEC™ of Commission Electrotechnique Internationale. IrDA™ of Infrared Data Association Corporation. ISO™ of INTERNATIONAL ORGANIZATION FOR STANDARDIZATION. MATLAB™ of MathWorks, Inc. MAXIM™ of Maxim Integrated Products, Inc. MICROTEC™, NUCLEUS™ of Mentor Graphics Corporation. Mifare™ of NXP. MIPI™ of MIPI Alliance, Inc. MIPS™ of MIPS Technologies, Inc., USA. muRata™ of MURATA MANUFACTURING CO., MICROWAVE OFFICE™ (MWO) of Applied Wave Research Inc., OmniVision™ of OmniVision Technologies, Inc. Openwave™ Openwave Systems Inc. RED HAT™ Red Hat, Inc. RFMD™ RF Micro Devices, Inc. SIRIUS™ of Sirius Satellite Radio Inc. SOLARIS™ of Sun Microsystems, Inc. SPANSION™ of Spansion LLC Ltd. Symbian™ of Symbian Software Limited. TAIYO YUDEN™ of Taiyo Yuden Co. TEAKLITE™ of CEVA, Inc. TEKTRONIX™ of Tektronix Inc. TOKO™ of TOKO KABUSHIKI KAISHA TA. UNIX™ of X/Open Company Limited. VERILOG™, PALLADIUM™ of Cadence Design Systems, Inc. VLYNQ™ of Texas Instruments Incorporated. VXWORKS™, WIND RIVER™ of WIND RIVER SYSTEMS, INC. ZETEX™ of Diodes Zetex Limited.

Last Trademarks Update 2010-10-26

Table of Contents

Table of Contents 4
List of Figures 5
List of Tables 6
1 Bi-directional Low Capacitance ESD / Transient Protection Diode 7
1.1 Features 7
1.2 Application Examples 7
2 Product Description 7
3 Characteristics 8
3.1 Electrical Characteristics at T_A = 25 °C, unless otherwise specified 8
4 Typical Characteristics at T_A = 25 °C, unless otherwise specified 10
5 Application Information 14
6 Ordering Information Scheme (Examples) 15
7 Package Information 16
7.1 PG-TSLP-2-17 (mm) [2] 16
7.2 PG-TSSLP-2-1 (mm) [2] 17
References 18
Terminology 19
Predefined Names 20

List of Figures

Figure 2-1 Pin Configuration and Schematic Diagram . . . 7
Figure 3-1 Definitions of electrical characteristics . . . 8
Figure 4-1 Reverse current: $I_R = f(V_R)$ . . . 10
Figure 4-2 Line capacitance: $C_L = f(V_R)$, f = 1MHz . . . 10
Figure 4-3 Clamping voltage (TLP): $I_{TLP} = f(V_{TLP})$, from pin 1 to pin 2 [1] . . . 11
Figure 4-4 Clamping voltage (TLP): $I_{TLP} = f(V_{TLP})$, from pin 2 to pin 1 [1] . . . 11
Figure 4-5 IEC61000-4-2 : $V_{CL} = f(t)$, 8 kV positive pulse from pin 1 to pin 2 . . . 12
Figure 4-6 IEC61000-4-2 : $V_{CL} = f(t)$, 8 kV negative pulse from pin 1 to pin 2 . . . 12
Figure 4-7 IEC61000-4-2 : $V_{CL} = f(t)$, 15 kV positive pulse from pin 1 to pin 2 . . . 13
Figure 4-8 IEC61000-4-2 : $V_{CL} = f(t)$, 15 kV negative pulse from pin 1 to pin 2 . . . 13
Figure 5-1 Single line, bi-directional ESD / Transient protection . . . 14
Figure 6-1 Ordering information scheme . . . 15
Figure 7-1 PG-TSLP-2-17: Package overview . . . 16
Figure 7-2 PG-TSLP-2-17: Footprint . . . 16
Figure 7-3 PG-TSLP-2-17: Packing . . . 16
Figure 7-4 PG-TSLP-2-17: Marking (example) . . . 16
Figure 7-5 PG-TSSLP-2-1: Package overview . . . 17
Figure 7-6 PG-TSSLP-2-1: Footprint . . . 17
Figure 7-7 PG-TSSLP-2-1: Packing . . . 17
Figure 7-8 PG-TSSLP-2-1: Marking (example) . . . 17

List of Tables

Table 2-1 Ordering Information 7
Table 3-1 Maximum Ratings at T_A = 25 °C, unless otherwise specified 8
Table 3-2 DC Characteristics at T_A = 25 °C, unless otherwise specified 8
Table 3-3 RF Characteristics at T_A = 25 °C, unless otherwise specified 9
Table 3-4 ESD Characteristics at T_A = 25 °C, unless otherwise specified 9

1 Bi-directional Low Capacitance ESD / Transient Protection Diode

1.1 Features

- ESD / transient protection of signal lines in low voltage applications according to:
  - IEC61000-4-2 (ESD): ±20 kV (air / contact)
  - IEC61000-4-4 (EFT): 40 A (5/50 ns)
- Bi-directional, symmetrical working voltage up to V_{RWM} = ±5.3 V
- Low capacitance: C_L = 5 pF (typical)
- Low clamping voltage, low dynamic resistance down to: R_{DYN} = 0.22 Ω (typical)
- Pb-free (RoHS compliant) and halogen free package, very small form factor: 0.62 x 0.32 x 0.31 mm^3

RoHS

1.2 Application Examples

- Keypad, touchpad, buttons, convenience keys
- LCD displays, Camera, audio lines, mobile communication, Consumer products (E-Book, MP3, DVD, DSC...)
- Notebooks tablets and desktop computers and their peripherals

2 Product Description

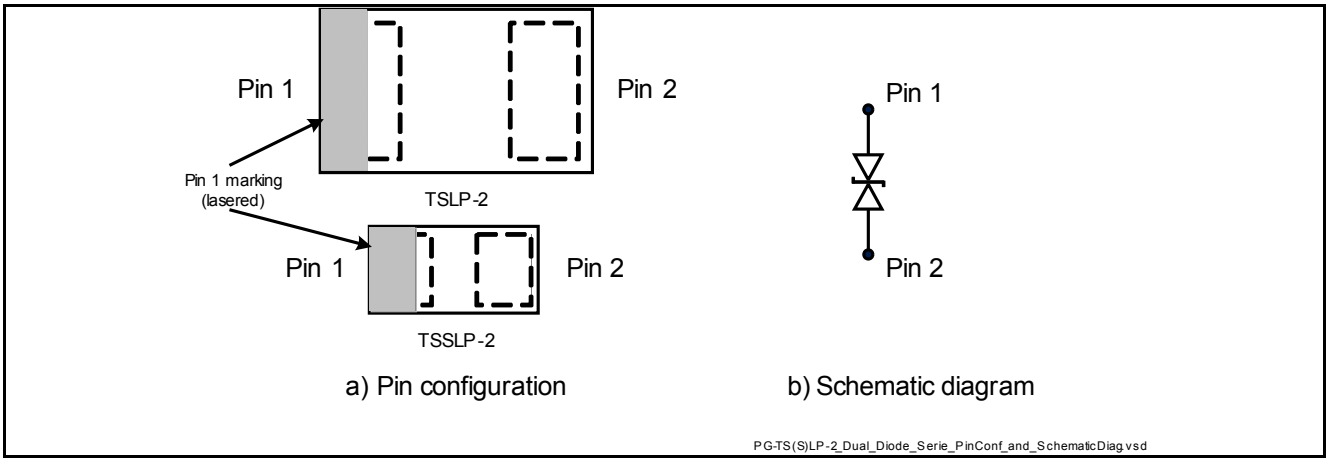

Figure 2-1 Pin Configuration and Schematic Diagram

Table 2-1 Ordering Information

Type	Package	Configuration	Marking code
ESD5V3L1B-02LRH	PG-TSLP-2-17	1 line, bi-directional	4
ESD5V3L1B-02LS	PG-TSSLP-2-1	1 line, bi-directional	C

3 Characteristics

Table 3-1 Maximum Ratings at T_A = 25 °C, unless otherwise specified

Parameter	Symbol	Values			Unit
		Min.	Typ.	Max.	
ESD contact discharge[1)]	V_{ESD}	–	–	20	kV
Operating temperature range	T_{OP}	-40	–	125	°C
Storage temperature	T_{stg}	-65	–	150	°C

1) V_{ESD} according to IEC61000-4-2

3.1 Electrical Characteristics at T_A = 25 °C, unless otherwise specified

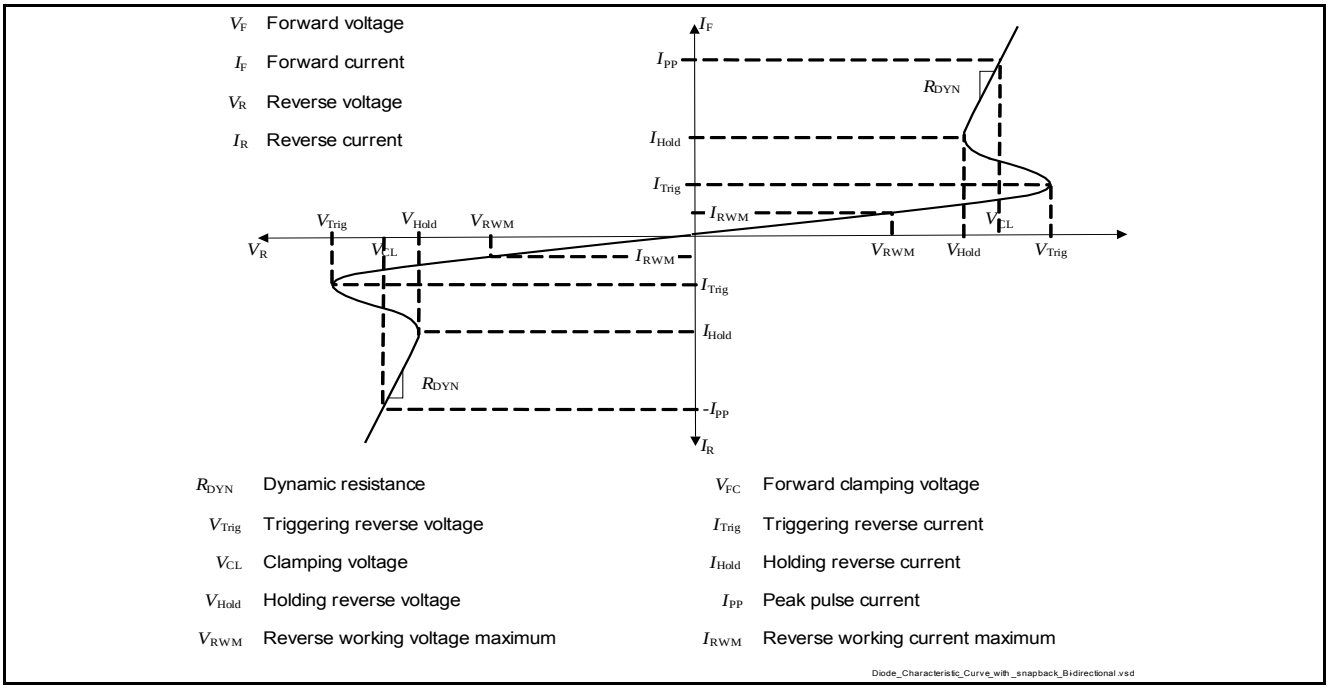

Figure 3-1 Definitions of electrical characteristics

Table 3-2 DC Characteristics at T_A = 25 °C, unless otherwise specified

Parameter	Symbol	Values			Unit	Note / Test Condition
		Min.	Typ.	Max.		
Reverse working voltage	V_{RWM}	-5.3	–	5.3	V	
Breakdown voltage	V_{BR}	6	–	10	V	I_{BR} = 1 mA
Reverse current	I_R	–	–	100	nA	V_R = 5.3 V

Table 3-3 RF Characteristics at T_A = 25 °C, unless otherwise specified

Parameter	Symbol	Values			Unit	Note / Test Condition
		Min.	Typ.	Max.		
Line capacitance	C_L	4	–	7	pF	V_R = 0 V, f = 1 MHz
Serie inductance	L_S	–	0.4	–	nH	PG-TSLP-2-17
			0.2			PG-TSSLP-2-1

Table 3-4 ESD Characteristics at T_A = 25 °C, unless otherwise specified

Parameter	Symbol	Values			Unit	Note / Test Condition
		Min.	Typ.	Max.		
Clamping voltage [1]	V_{CL}	–	10.2	–	V	I_{PP} = 16 A, from Pin 1 to Pin 2
		–	13.2	–	V	I_{PP} = 30 A, from Pin 1 to Pin 2
		–	12.1	–		I_{PP} = 16 A, from Pin 2 to Pin 1
		–	17.2	–		I_{PP} = 30 A, from Pin 2 to Pin 1
Dynamic resistance [1]	R_{DYN}	–	0.22	–	Ω	Pin 1 to Pin 2
		–	0.37	–	Ω	Pin 2 to Pin 1

1) Please refer to Application Note AN210 [1]. TLP parameter: Z_0 = 50 Ω, t_p = 100ns, t_r = 300ps, averaging window: t_1 = 30 ns to t_2 = 60 ns, extraction of dynamic resistance using least squares fit of TLP charactertistics between I_{PP1} = 10 A and I_{PP2} = 40 A.

4 Typical Characteristics at T_A = 25 °C, unless otherwise specified

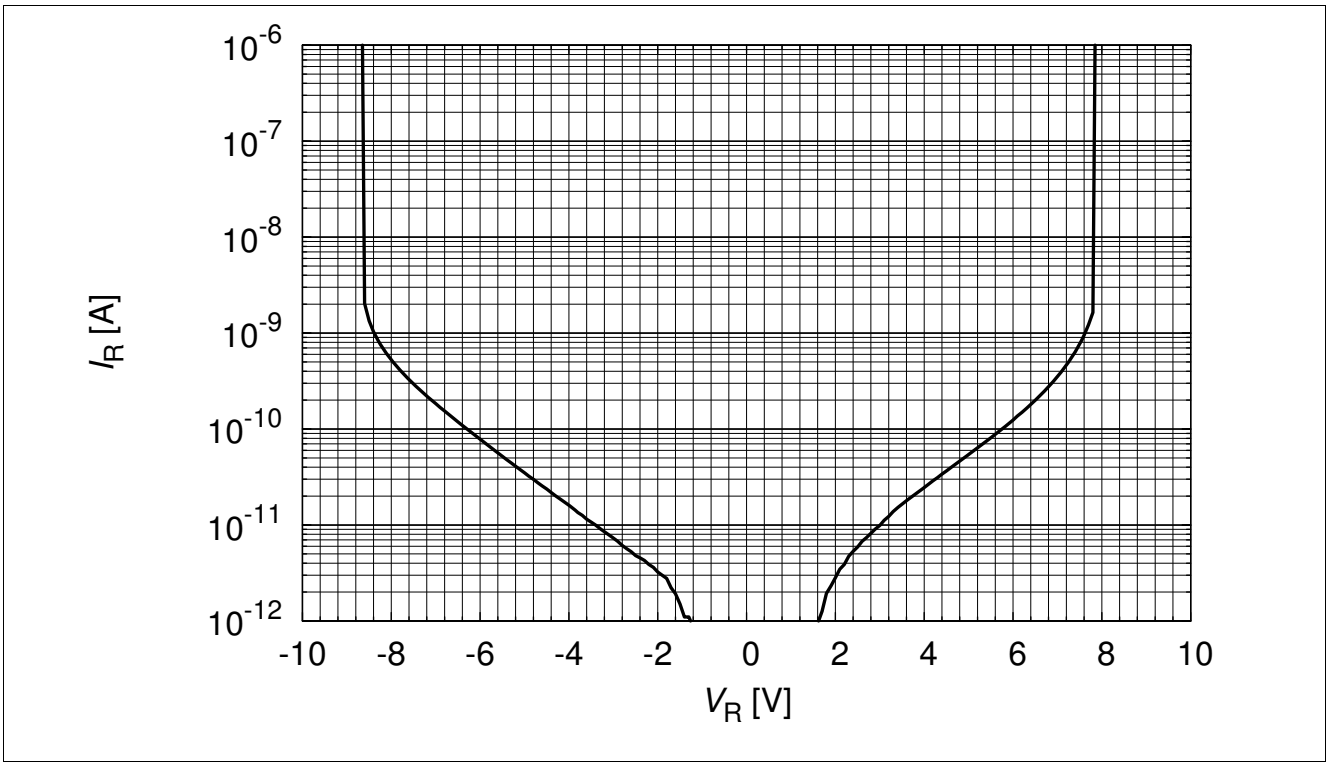

Figure 4-1 Reverse current: $I_R = f(V_R)$

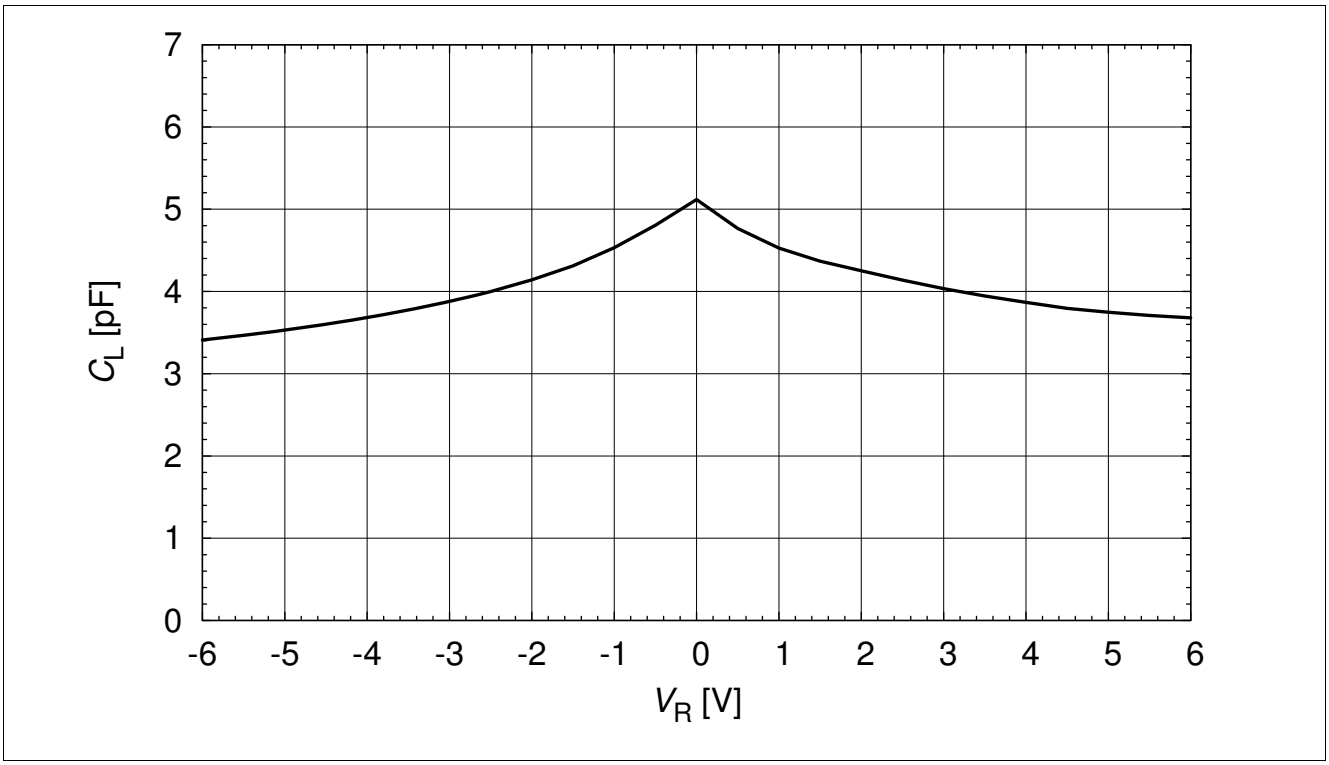

Figure 4-2 Line capacitance: $C_L = f(V_R)$, f = 1MHz

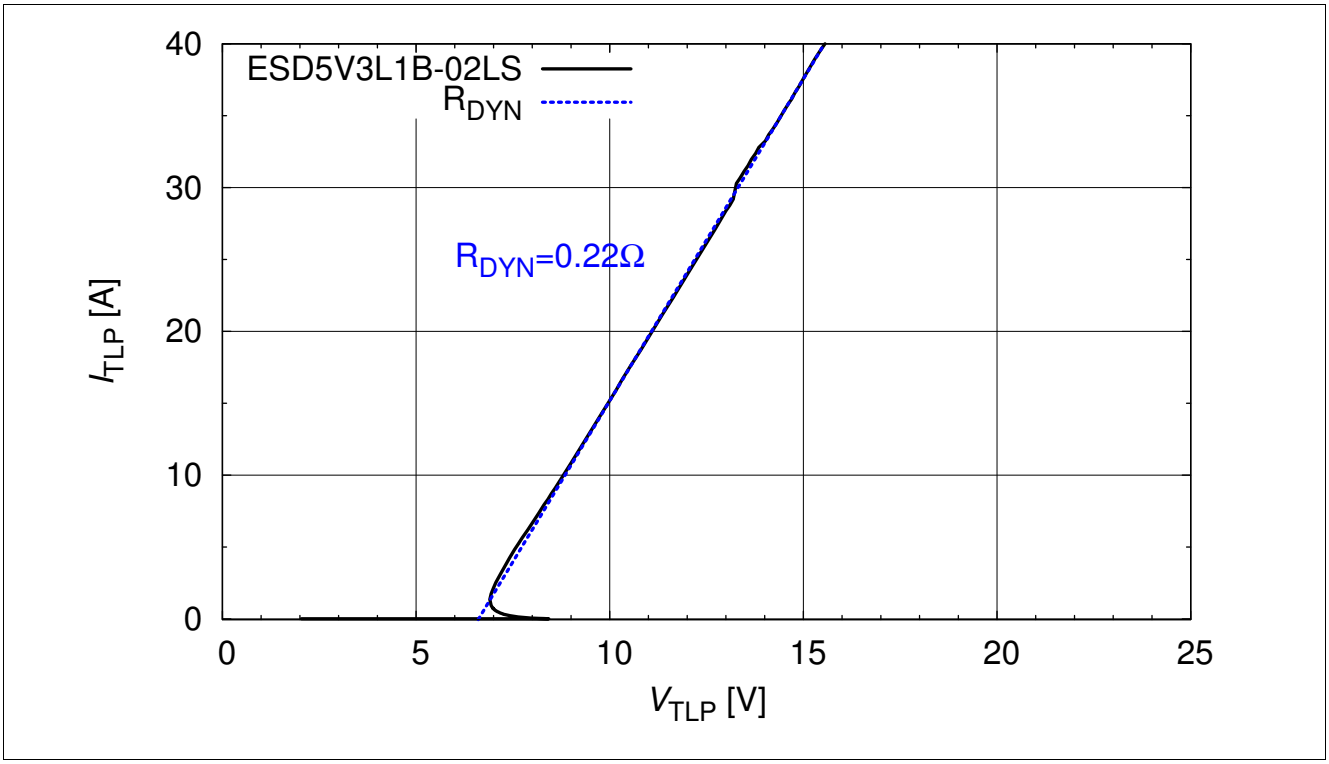

Figure 4-3 Clamping voltage (TLP): $I_{TLP} = f(V_{TLP})$, from pin 1 to pin 2 [1]

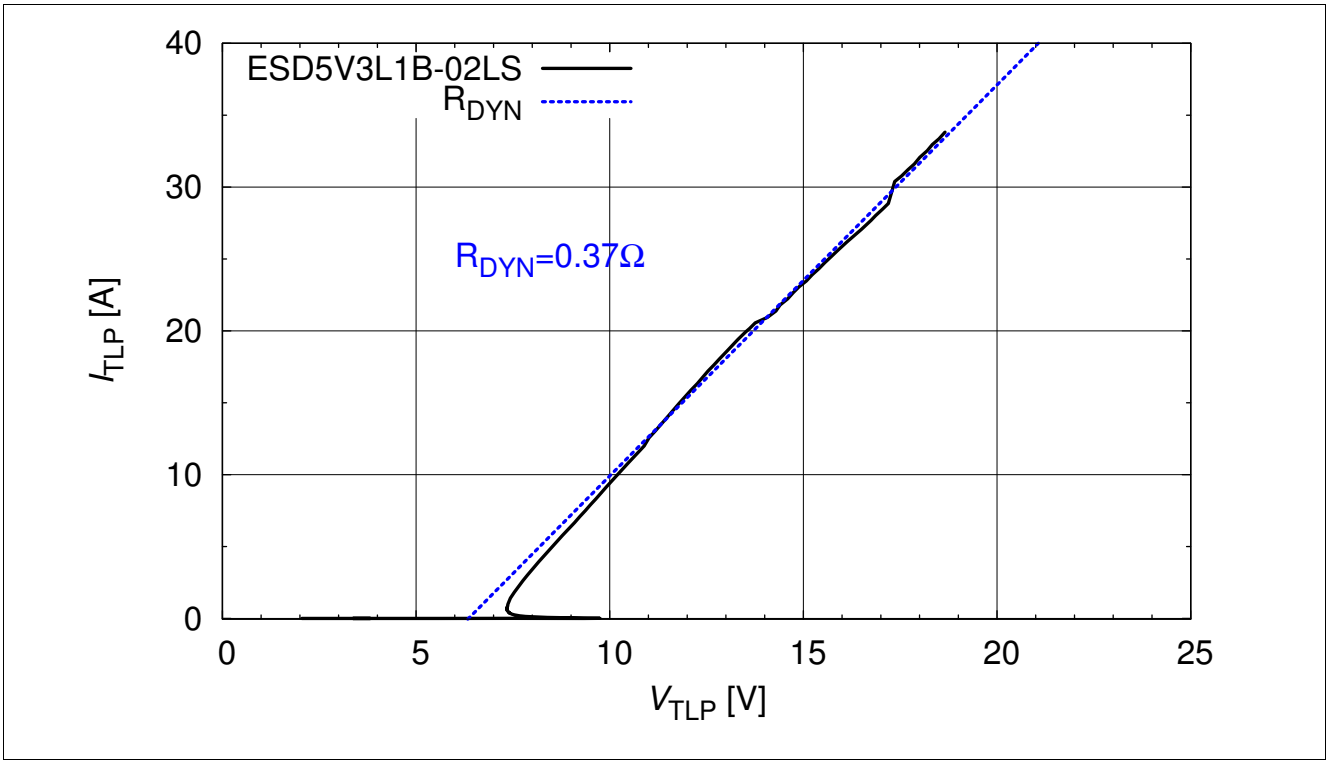

Figure 4-4 Clamping voltage (TLP): $I_{TLP} = f(V_{TLP})$, from pin 2 to pin 1 [1]

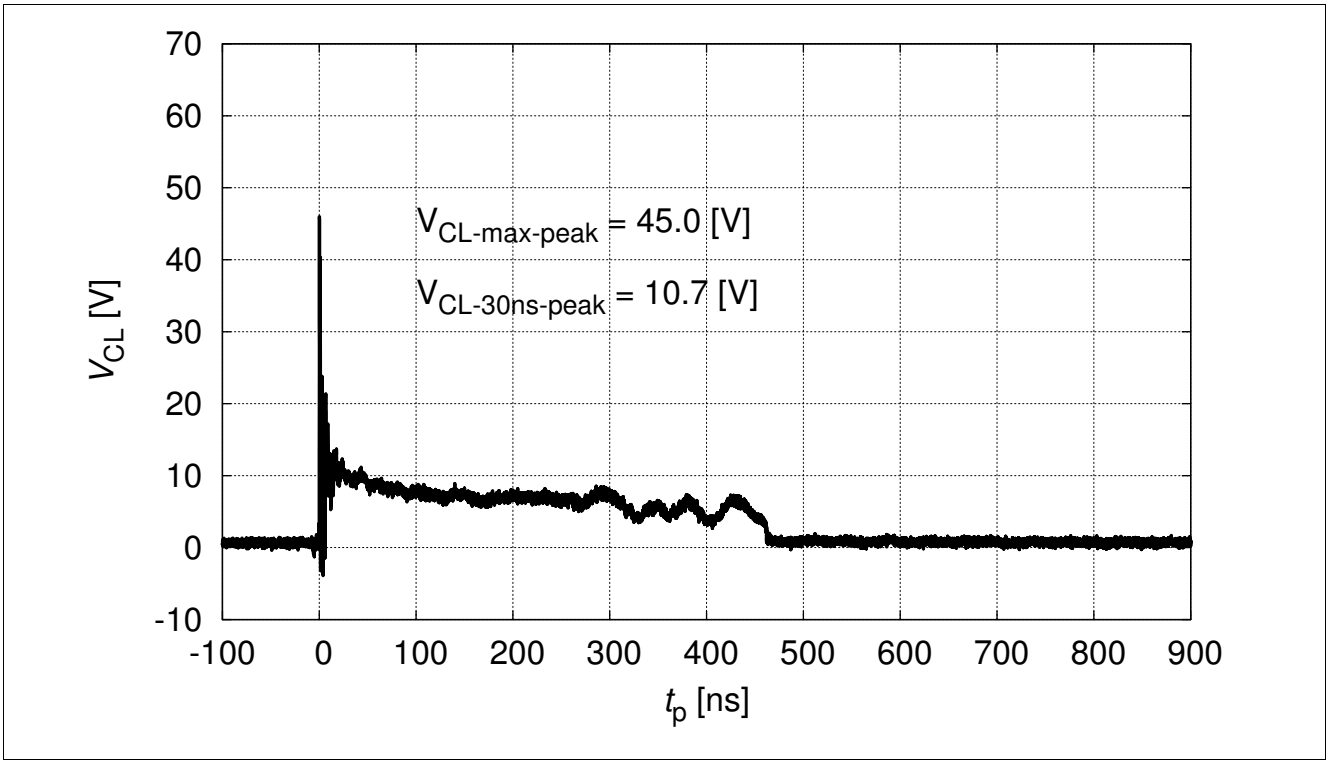

Figure 4-5 IEC61000-4-2 : V_{CL} = $f(t)$, 8 kV positive pulse from pin 1 to pin 2

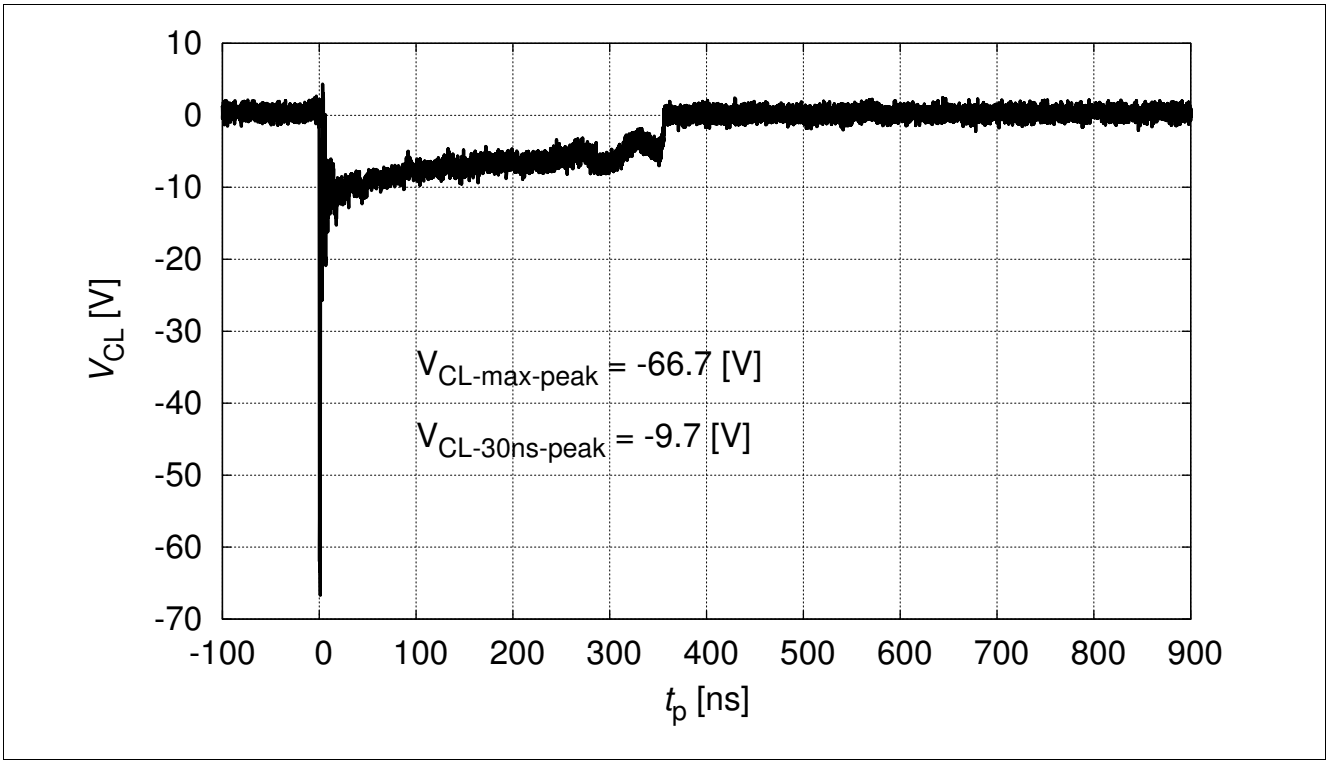

Figure 4-6 IEC61000-4-2 : V_{CL} = $f(t)$, 8 kV negative pulse from pin 1 to pin 2

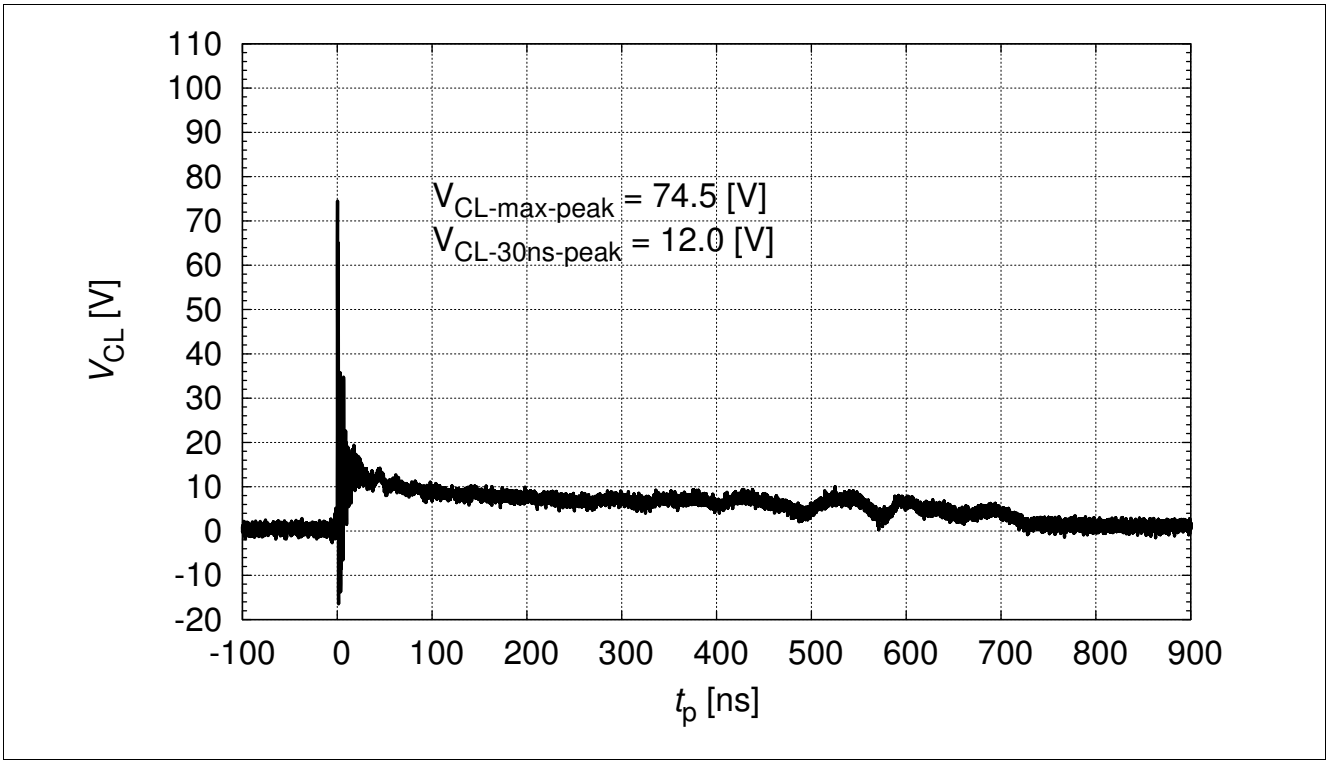

Figure 4-7 IEC61000-4-2 : V_{CL} = *f*(*t*), 15 kV positive pulse from pin 1 to pin 2

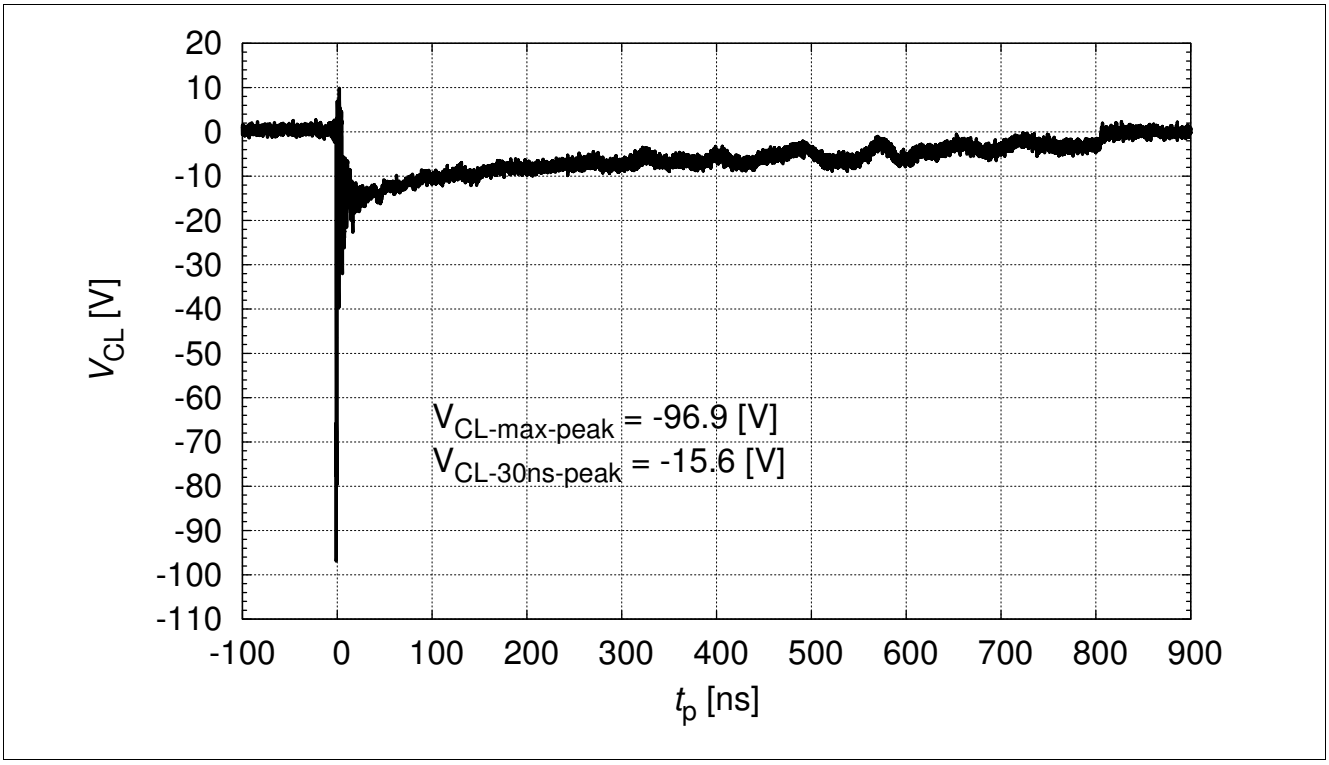

Figure 4-8 IEC61000-4-2 : V_{CL} = *f*(*t*), 15 kV negative pulse from pin 1 to pin 2

5 Application Information

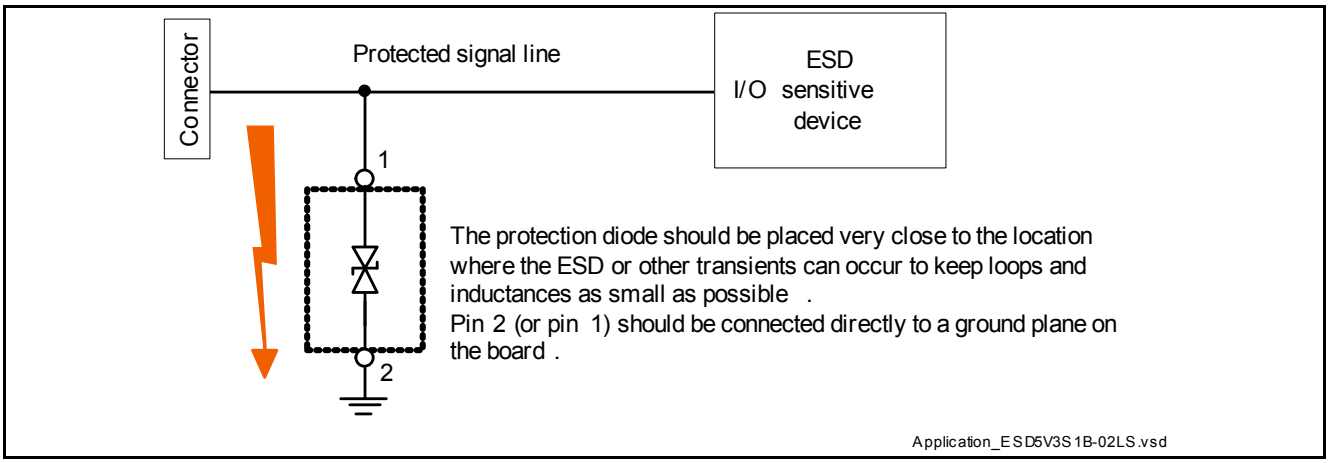

Figure 5-1 Single line, bi-directional ESD / Transient protection

6 Ordering Information Scheme (Examples)

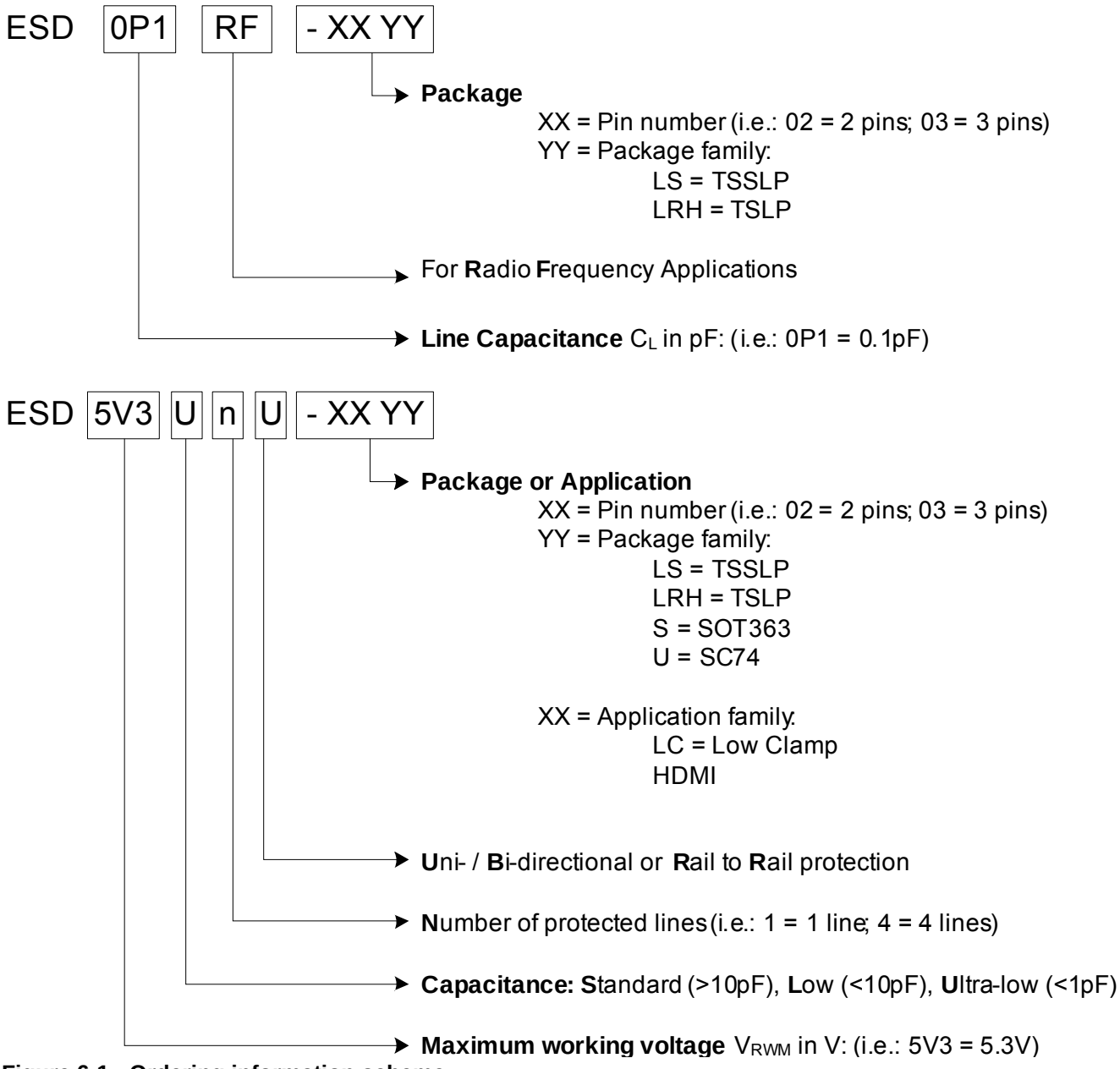

Figure 6-1 Ordering information scheme

7 Package Information

7.1 PG-TSLP-2-17 (mm) [2]

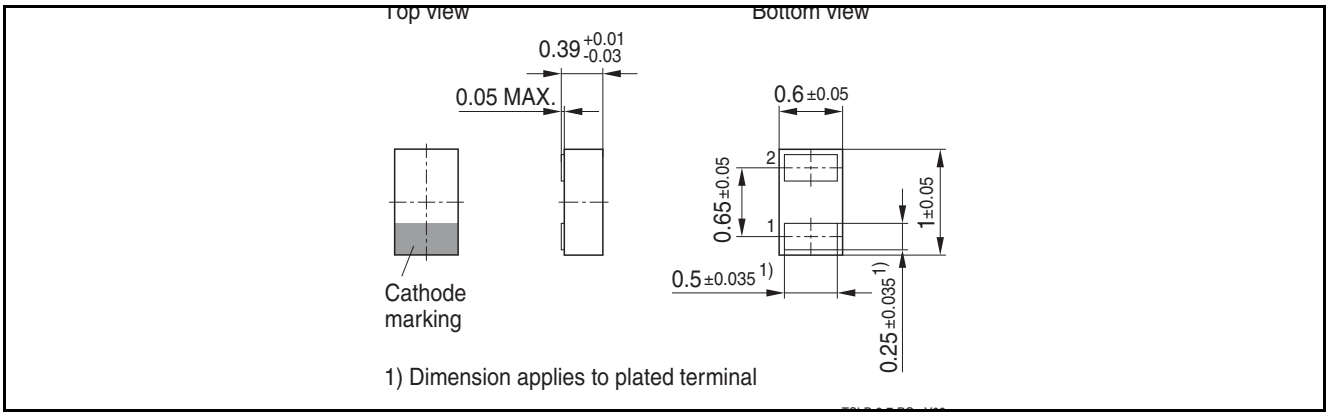

Figure 7-1 PG-TSLP-2-17: Package overview

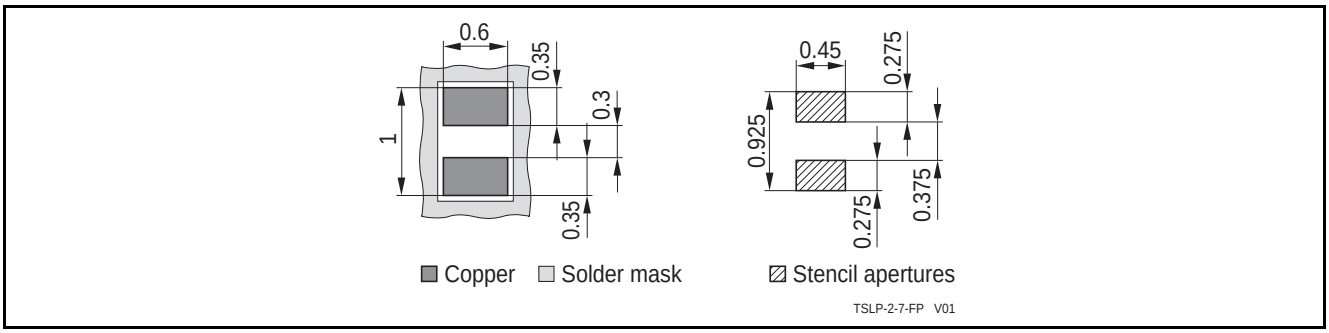

Figure 7-2 PG-TSLP-2-17: Footprint

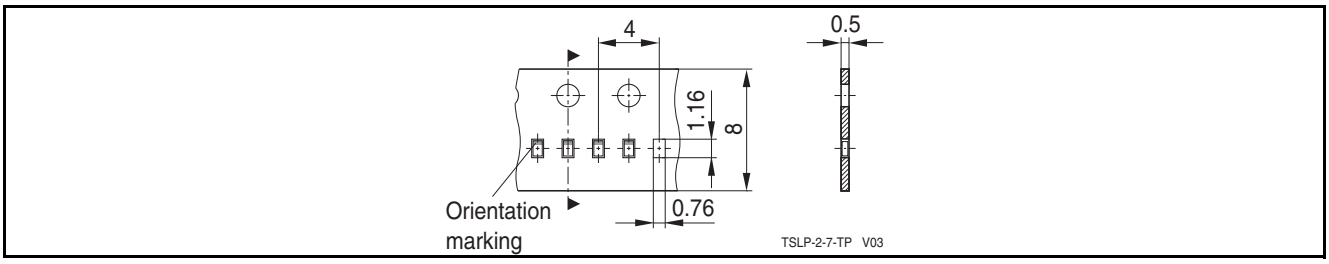

Figure 7-3 PG-TSLP-2-17: Packing

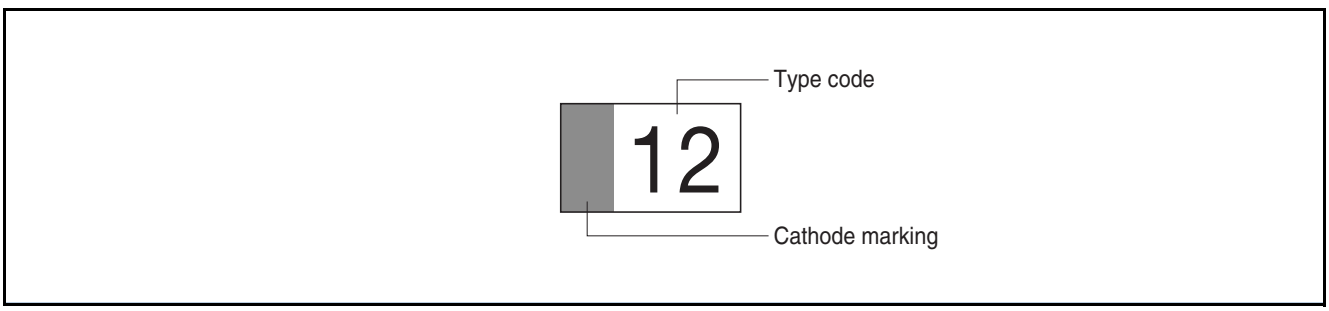

Figure 7-4 PG-TSLP-2-17: Marking (example)

7.2 PG-TSSLP-2-1 (mm) [2]

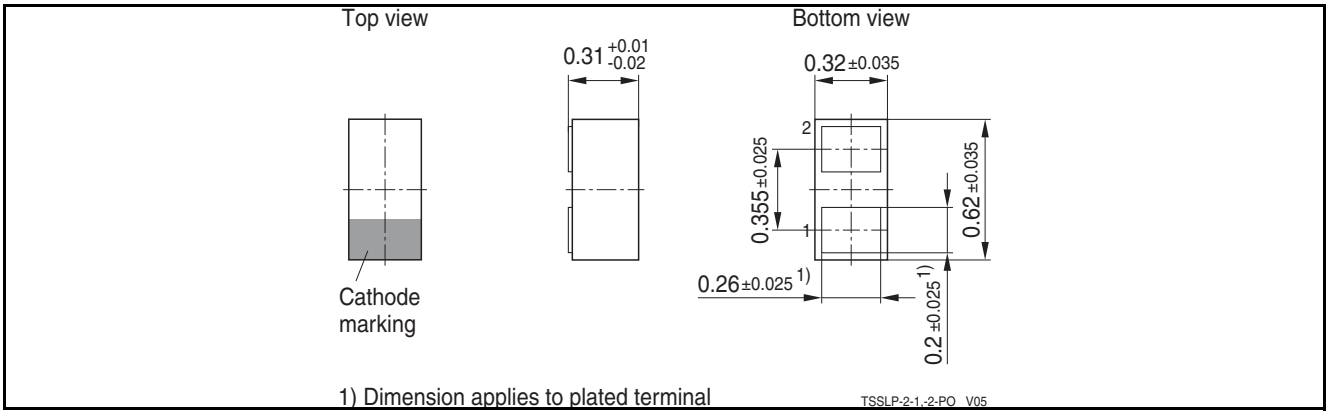

Figure 7-5 PG-TSSLP-2-1: Package overview

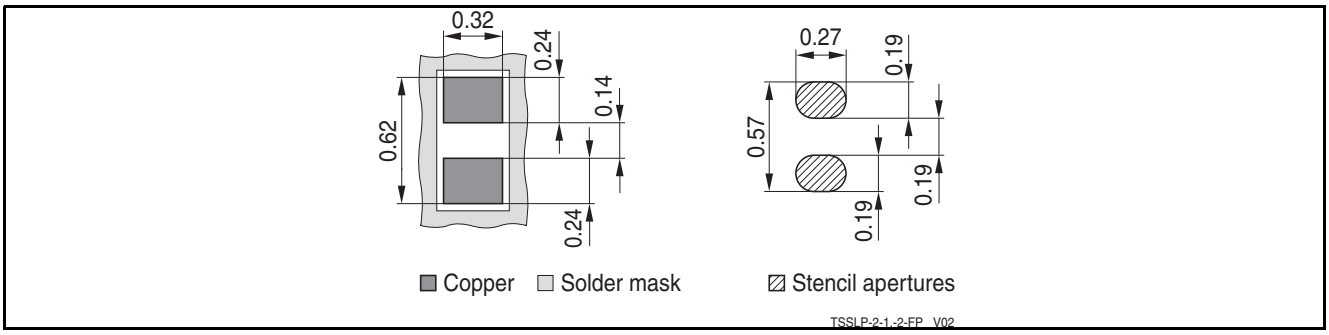

Figure 7-6 PG-TSSLP-2-1: Footprint

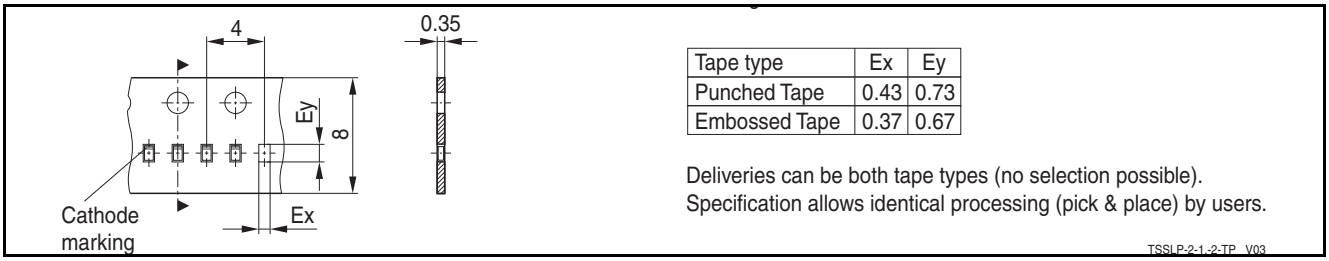

Figure 7-7 PG-TSSLP-2-1: Packing

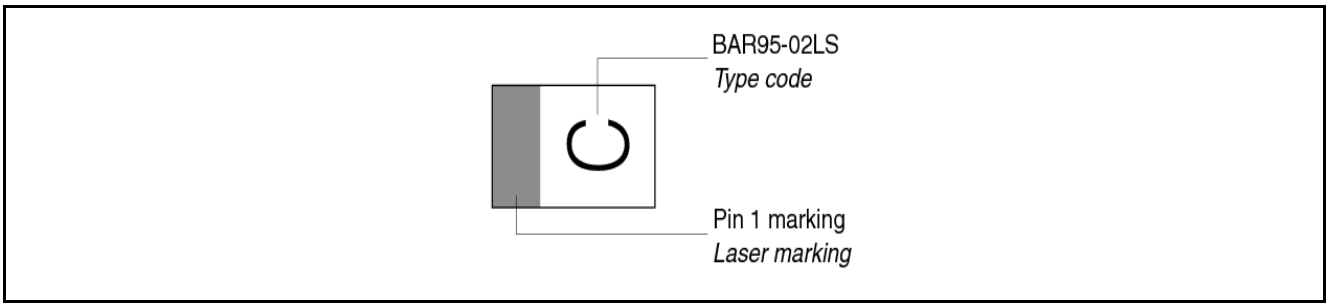

Figure 7-8 PG-TSSLP-2-1: Marking (example)

References

[1] Infineon AG - **Application Note AN210:** Effective ESD Protection design at System Level Using VF-TLP Characterization Methodology

[2] Infineon AG - Recommendations for PCB Assembly of Infineon TSLP and TSSLP Packages

Terminology

C_L	Line capacitance
DSC	Digital Still Camera
DVD	Digital Versatile Disc
EFT	Electrical Fast Transient
ESD	Electrostatic Discharge
I_{PP}	Peak pulse current
I_R	Reverse current
LCD	Liquid Crystal Display
MP3	Audio player device based on MPEG Audio Layer III
$\boldsymbol{P_{PK}}$	Peak pulse power
R_{DYN}	Dynamic resistance
RoHs	Restriction of Hazardous Substance directive
STB	Set-Top-Box
T_A	Ambient temperature
T_{OP}	Operation temperature
t_p	Pulse duration
T_{stg}	Storage temperature
V_{BR}	Breakdown voltage
V_{CL}	Reverse clamping voltage
V_{ESD}	Electrostatic discharge voltage
V_R	Reverse voltage
V_{RWM}	Reverse working voltage maximum

Predefined Names

Name	Initial Cross-Reference
X-GOLD	X-GOLD
XMM	XMM

Definition of “Predefined Names”

Frequently used expressions, such as component names, file names, tools releases, version numbers, proprietary variables and software links, can be used in a similar way as user variables. However, they must be listed in a special table and **not** in the standard file “Variables”.

Correct Usage

Steps:

1. Insert all expressions into the left column of the above table.
2. Insert an initial Cross-Reference into the right column of the same row. The initial Cross-Reference is necessary to ensure that a single ID is used in all your documents using the “Predefined_Names.fm” file (Example: **X-GOLD** has the unique ID = CHDGHJGH).
3. Insert a Cross-Reference (Element “CrossReference”) into your document to the Element Identifier of the “Predefined_Names.fm” file. Set the output format of the Cross-Reference to “Variable” (example: X-GOLD).

Notes

1. *All documents in a project (such as XMM) and within a book should use the same file “Predefined Names”. This allows copying content between different documents. For this reason, local versions of “Predefined Names” must not be produced.*
2. *New definitions must be inserted in a new row. Never change existing definitions, as they might be used in other documents.*
3. *This file does not need to be included in your book, but it must be in the fm sub-folder of your document.*
4. *You can sort the above table with FrameMaker only if the initial cross-reference in the right column has been properly inserted. Otherwise, the table may only be sorted by hand, as the cross-references to your document would get lost.*

w w w . i n f i n e o n . c o m

Published by Infineon Technologies AG