5-6 GHz WLAN 802.11ac Low-Noise Amplifier Design and Their Challenges

Using Infineon's New Generation Bipolar SiGe:C Transistor



IFAG PMM RPD BD TM
RF & Protection Devices

Dr. Chih-I Lin
Shamsuddin Ahmed (Rumi)

28 Nov 2012

Infineon Offers RF Analog Circuit Designers Brand New Experience to do Simulation in MWO

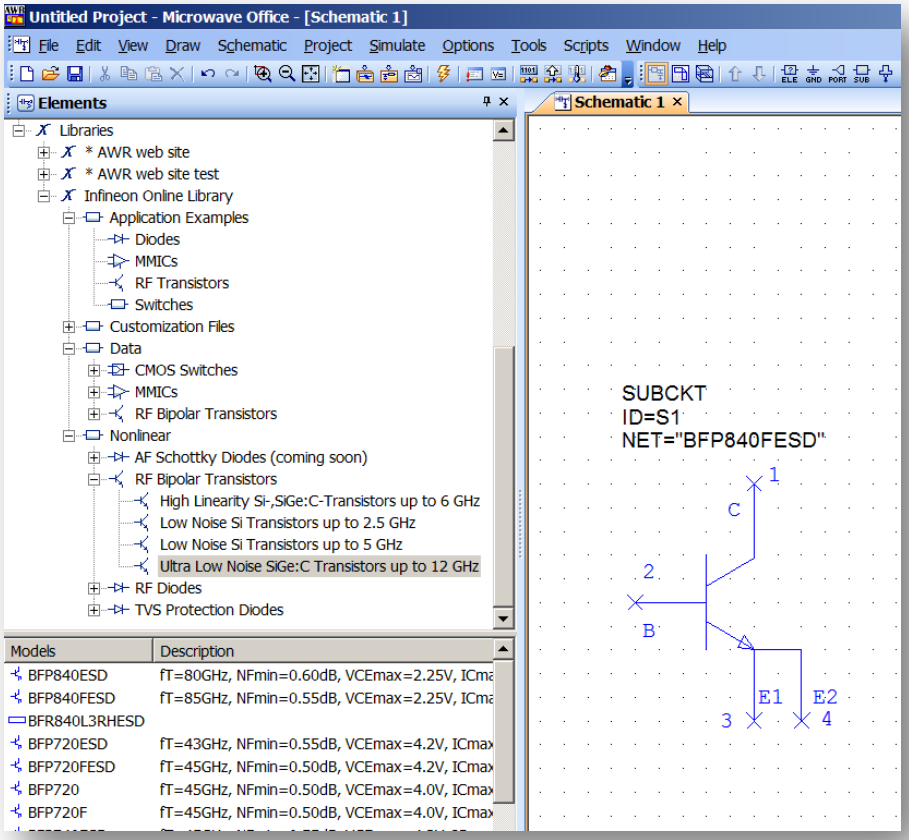

Infineon Online Library includes:

- **RF and ESD products:**
  - BJT transistors
  - RF MMICs
  - RF CMOS Switches (tbd)
  - RF Diodes
  - ESD Diodes
- **spice and/or MDIF S-Par**
- **product overview and links**
- **application examples** (started)

Just add the following line into your AWR lib.xlm file to Enjoy the advantage of using Infineon ‘s new cloud device library:

<FILE Name="Infineon Online Library">http://www.infineon.com/cms/media/mwo_models/xml/infineon_top.xml</FILE>

Dualband IEEE 802.11 b/g/n/a/ac Wi-Fi System Diagram



Uplink / Sensitivity

Downlink / Long Range

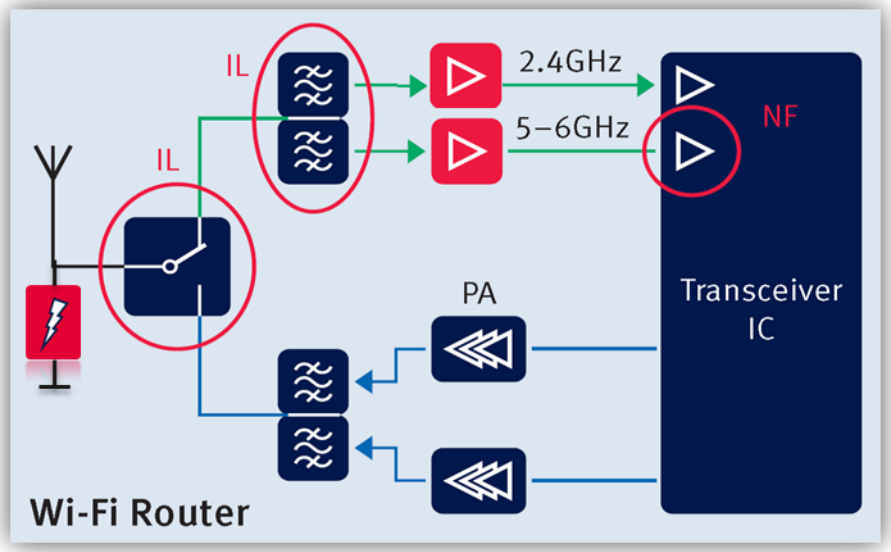

LNA	**2–4 GHz Transistors**	BFP842ESD, BFP840(F)ESD BFP740(F)ESD, BFP760, BFP640(F)ESD
	5–6 GHz Transistors	BFP840(F)ESD, BFR840L3RHESD, BFP740(F)ESD, BFR740L3RH, BFP760
	5–6 GHz MMIC	BGA758L7
Switch	**2–6 GHz**	**SPDT**: BGS12SL6 **SP3T**: BGS13SL9
ESD Protection	**2–6 GHz**	ESD0P2RF-02LS ESD0P2RF-02LRH

New Products in RED !

Infinen's newest SiGe:C Bipolar Transistors BFP840 Series

Boost your system performance…

BFP840ESD
Standard SOT343
f = 5.5 GHz
NF: 0.85 dB
Gmax: 22.5 dB
Vcc: 1.2 .. 2.8V
ESD: 1.5kV (HBM)

BFP840FESD
Flat lead TSFP-4
f = 5.5 GHz
NF: 0.75 dB
Gmax: 23 dB
Vcc: 1.2 .. 2.8V
ESD: 1.5kV (HBM)

BFR840L3RHESD
0.31mm-height TSLP
f = 5.5 GHz
NF: 0.65 dB
Gmax: 22 dB
Vcc: 1.2 .. 2.8V
ESD: 1.5kV (HBM)



Customer Decision Criteria	Product Benefits for customer	Product VALUE to customer (as measured in the application)
Lowest noise figure and highest gain	Gain: 15 – 18 dB @ 6GHz NF: ~ 1.0 dB @6GHz	higher SNR -> higher sensitivity Up to 5dB sensitivity improvement verified
Low BOM Cost	Less matching elements needed due to inherent matching	Only 8 external passives -> 40% less passive costs
Diversity of packages	Standard, flat-lead and low height packages available	TSLP-3-9 0.31mm height suitable for Wi-Fi modules
High out-of-band rejection	By implementing an input notch filter to reject the other band in applicaction	0 dBm IP1dB at 2.4 GHz achievable with 2 externals more -> 10 passives in total
Short On/Off switching	Very fast switching times in the < 250 ns range	Less capacity loss in TDD Wi-Fi systems.
ESD robustness	ESD HBM: 1.5 kV Max. RF Input: 20 dBm	Robustness against ESD strikes High immunity against jammers

Contents

- Wi-Fi System Overview, LNA requirements and Challenges
- Application Circuit and Measurement Results
- Measurement vs Simulation: Step-by-step Approach
- Further Work

Wi-Fi System, LNA Requirements and Challenges



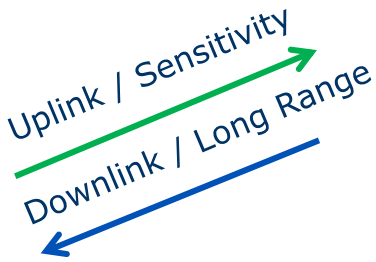

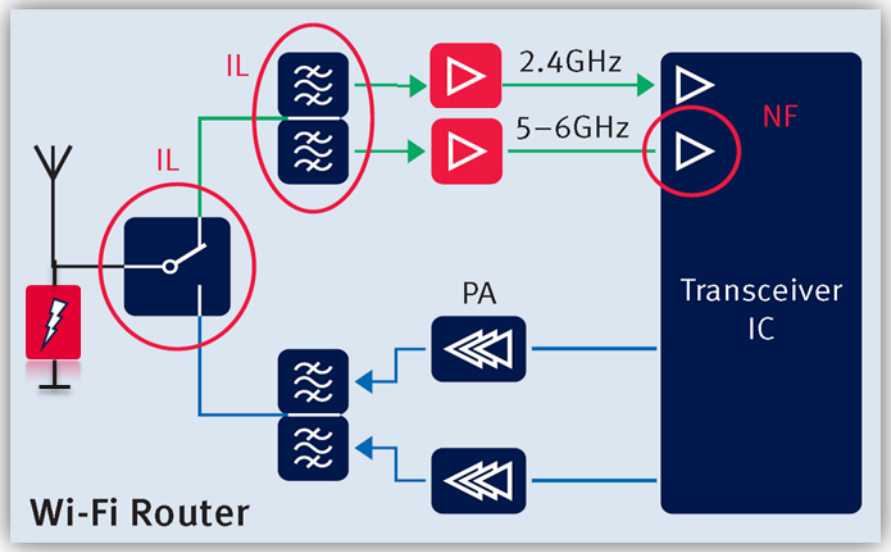

Challenges for IEEE 802.11ac Wi-Fi

- Wider coverage range
- Stringent SNR requirement: emerging high throughput wireless specifications like 256-QAM
- System NF requirement about 2dB: Problem: High system NF generated by switch, BPF/diplexer and integrated LNA
- Major performance criteria: sensitivity, strong signal capability and interference immunity

Low Parts Count Low Noise Amplifier for 5 to 6 GHz WLAN with BFR840L3RHESD using 0201 SMDs

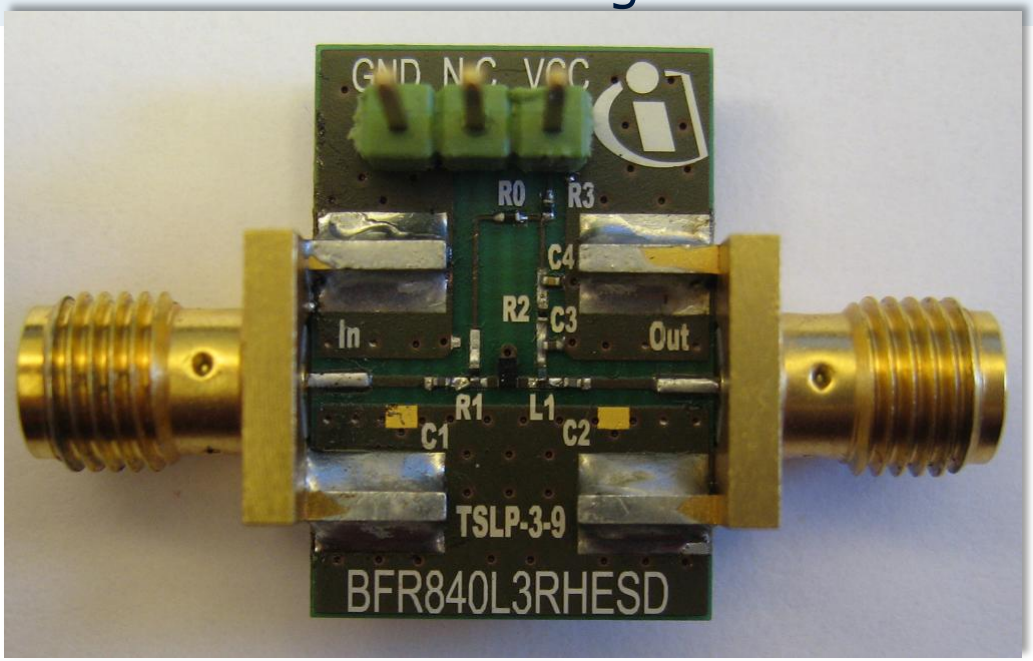



Summary of Measurement Results

Parameter	Symbol	Value			Unit
DC Voltage	Vcc		3.0		V
DC Current	Icc		9.4		mA
Frequency Range	Freq	5100	5500	5900	MHz
Gain	G	15.5	15.1	14.7	dB
Noise Figure	NF	0.98	0.96	0.92	dB
Input Return Loss	RLin	10	11	13	dB
Output Return Loss	RLout	12	13	14	dB
Reverse Isolation	IRev	22	21	20	dB
Input P1dB	IP1dB		-8		dBm
Output P1dB	OP1dB		+6		dBm
Input IP3	IIP3		+2		dBm
Output IP3	OIP3		+17		dBm
Stability	k		> 1.0		--

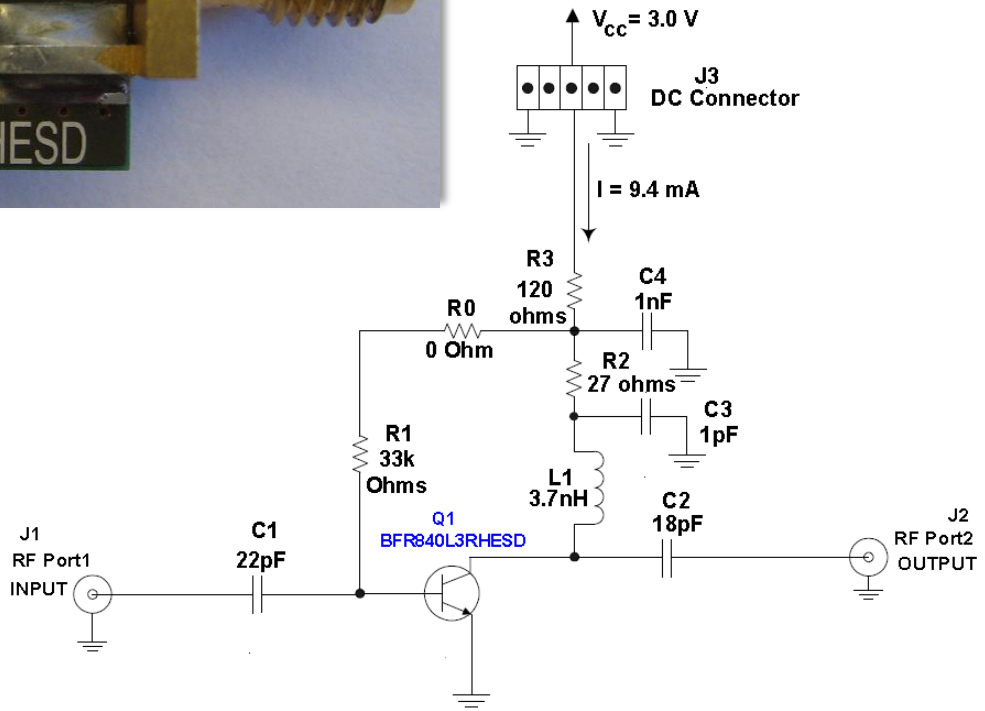

Starting Point: Simulation Setup

Designder friendly Simulation Environment for LNA Design

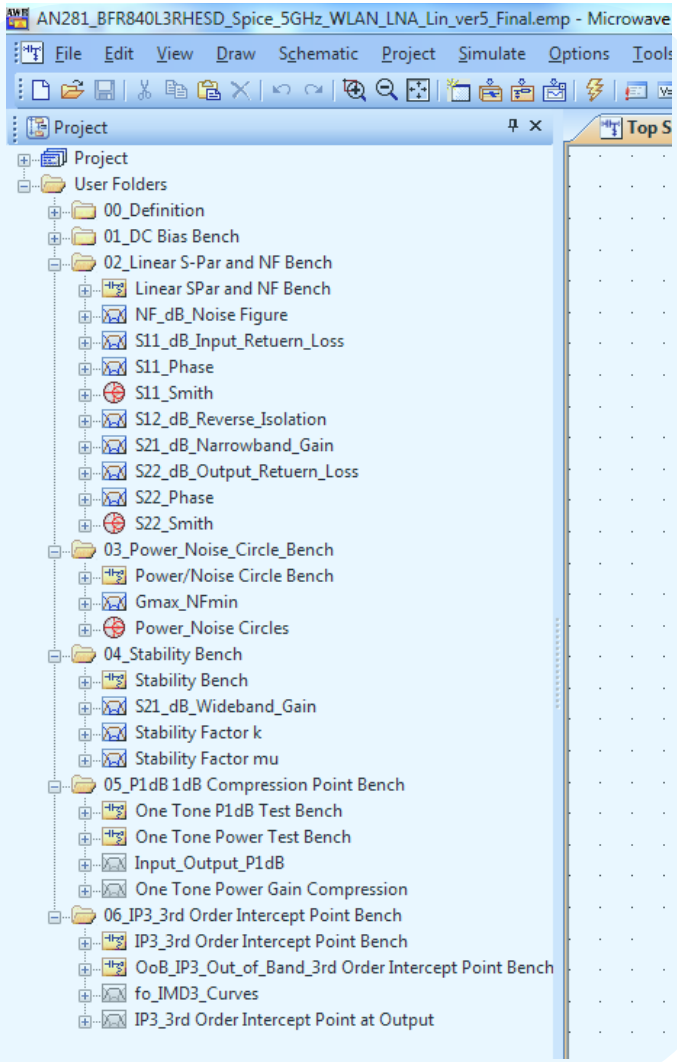

First Simulation Considered:

- Murata SMD L,C models (upto 6GHz)
- BFR840L3RHESD spice model
- FR4 substrate with Er=4.3

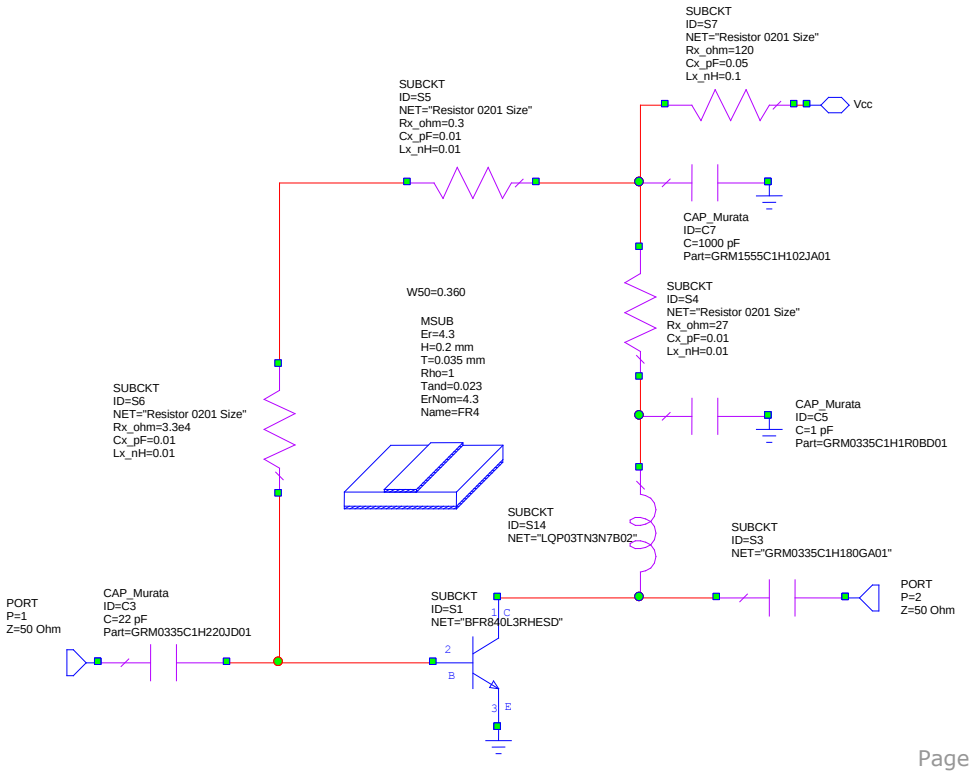

Starting Point:
Simulation (Blue) vs Measurement (Brown)

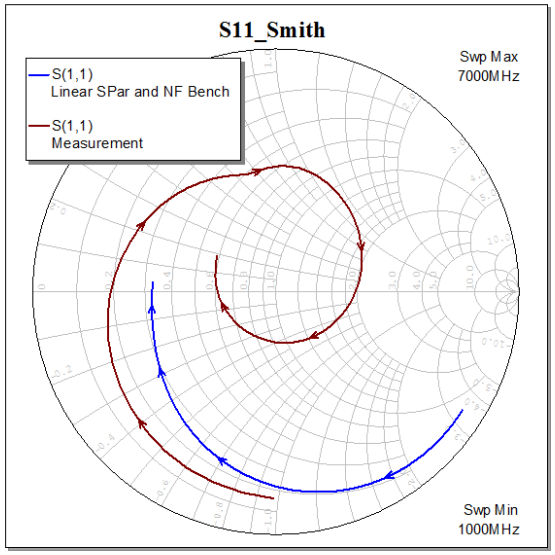

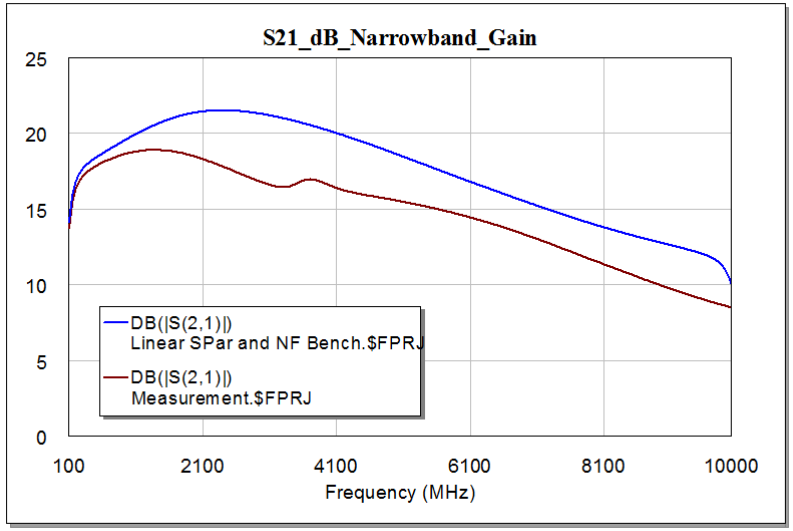

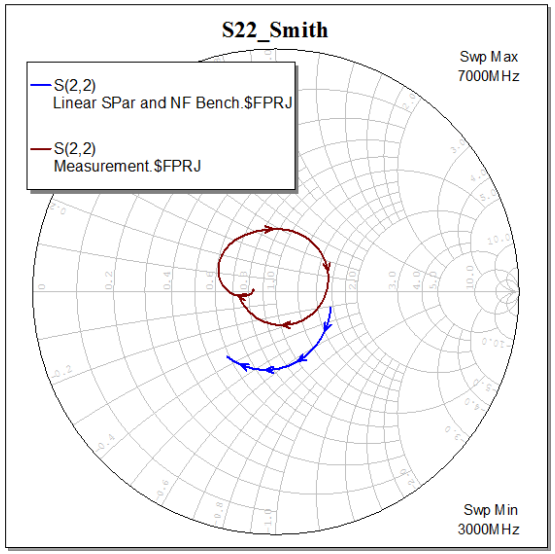

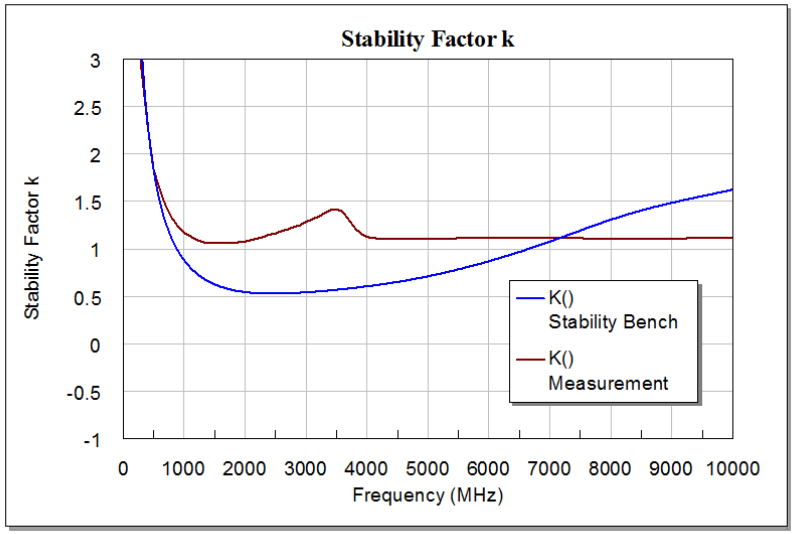

Step 1:
Simulation Setup

Further Simulation Considered:

- Board design/modeling
- Emitter degeneration
- Reference plane for RF elements
- Simple resistor model

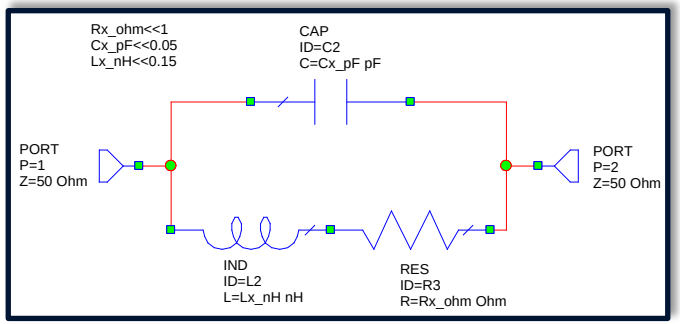

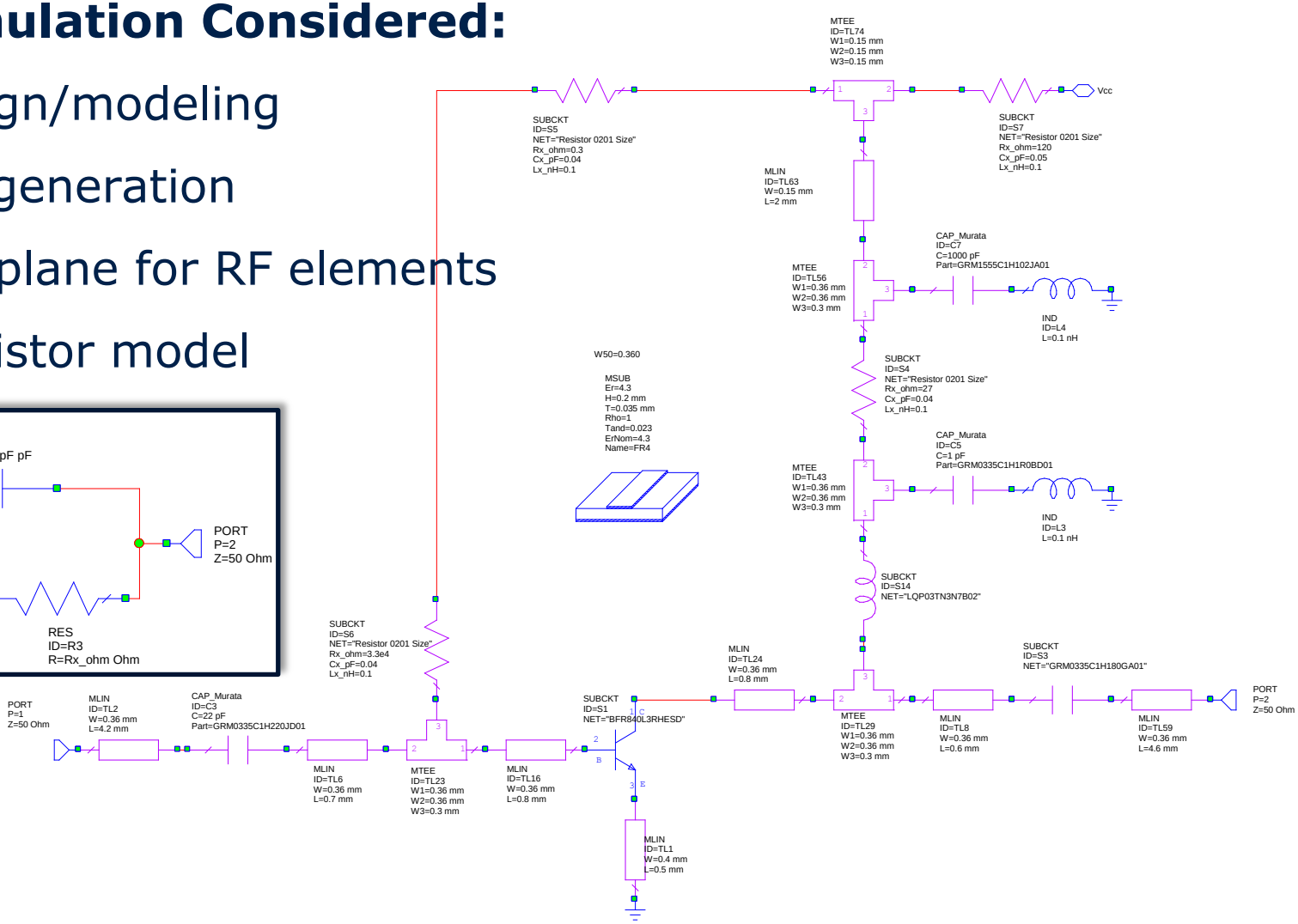

Step 1:
Simulation (Blue) vs Measurement (Brown)

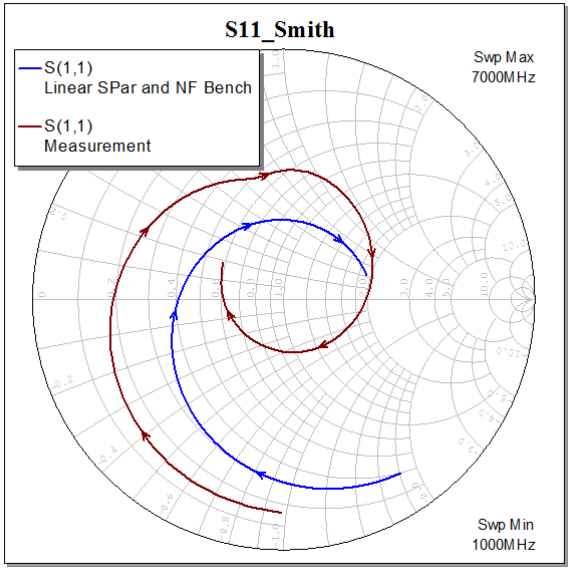

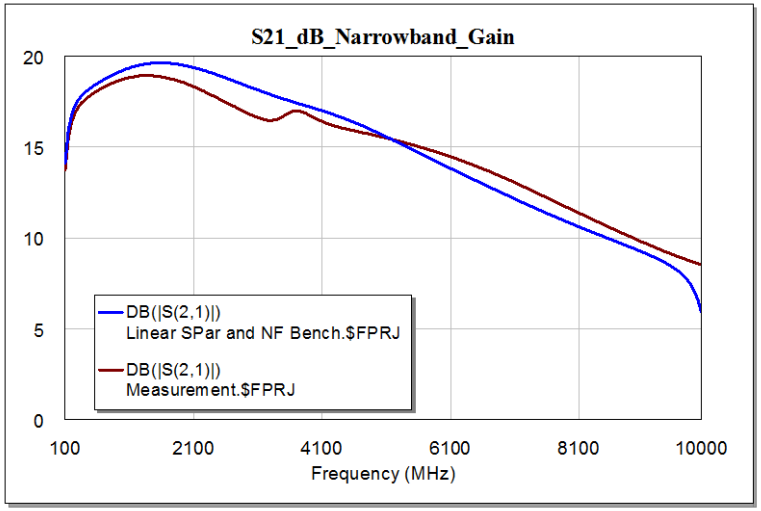

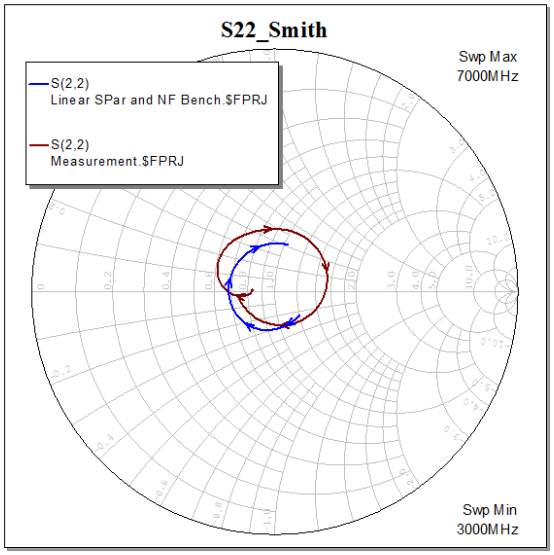

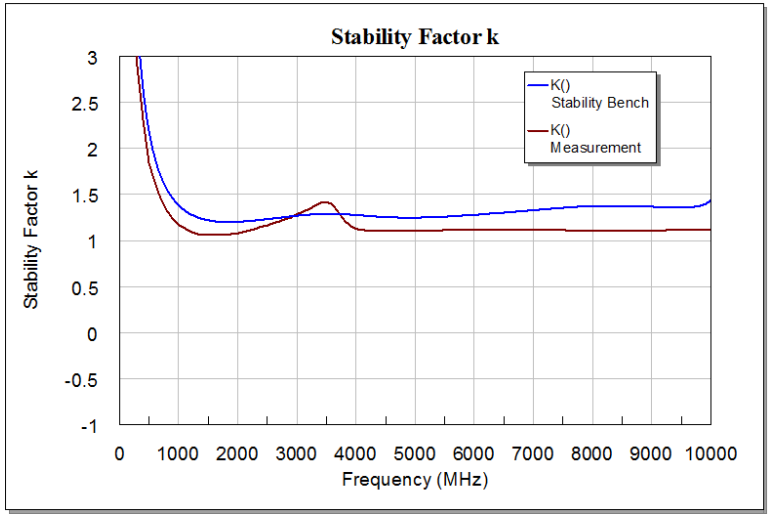

Step 2:
Simulation Setup

Further Simulation Considered:

- Influence of SMA connector
- SMA-to-Microstrip line transition

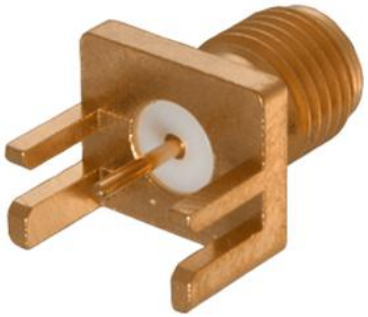

Step 2:
Simulation (Blue) vs Measurement (Brown)

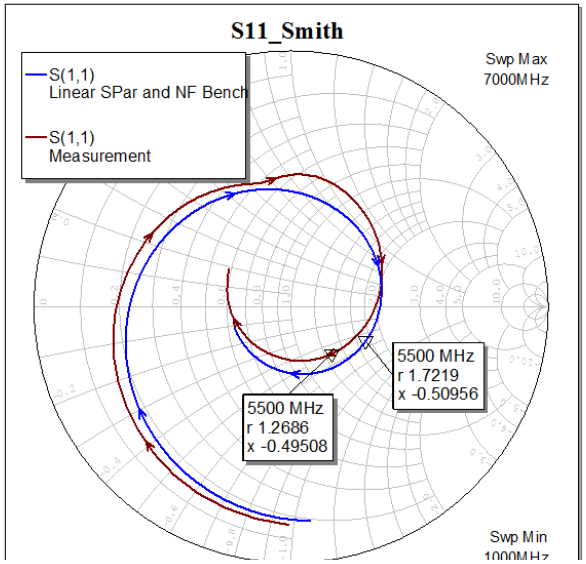

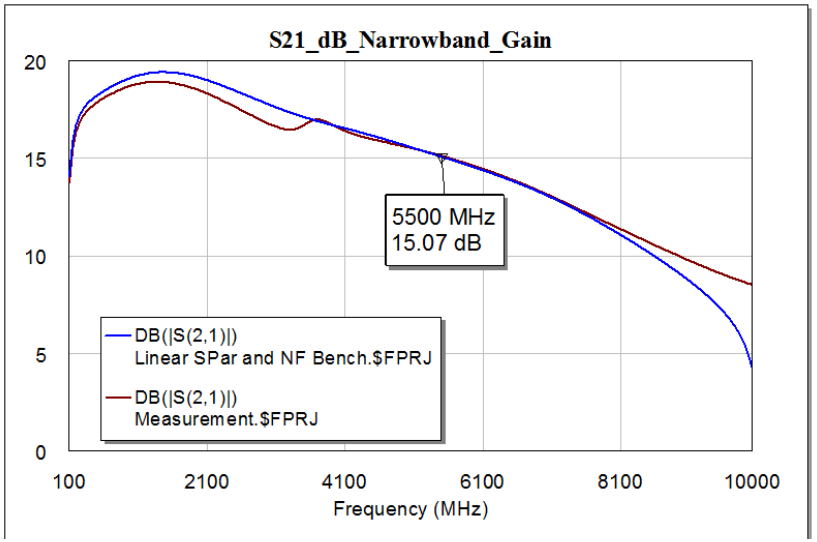

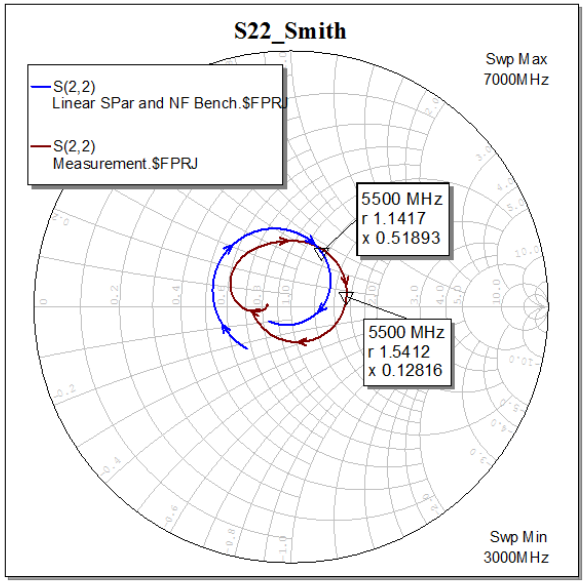

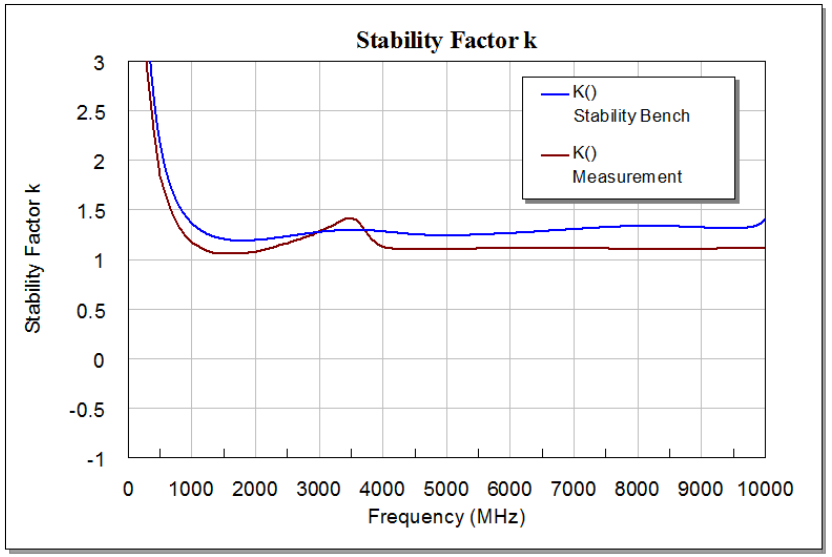

Final Step:
Simulation Setup

Simulation Considered:

- Influence of DC line
- Pad capacitance

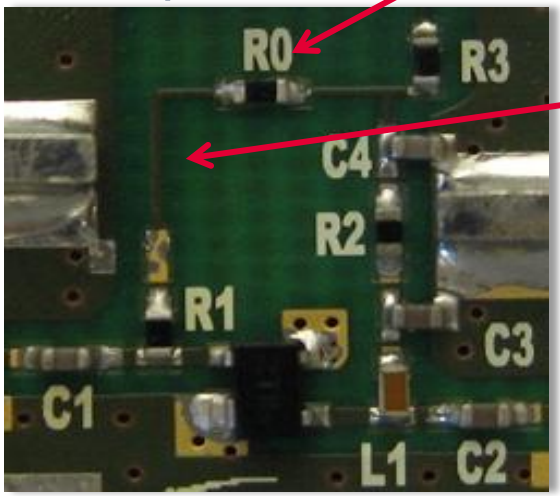

Final Step:
Simulation (Blue) vs Measurement (Brown)

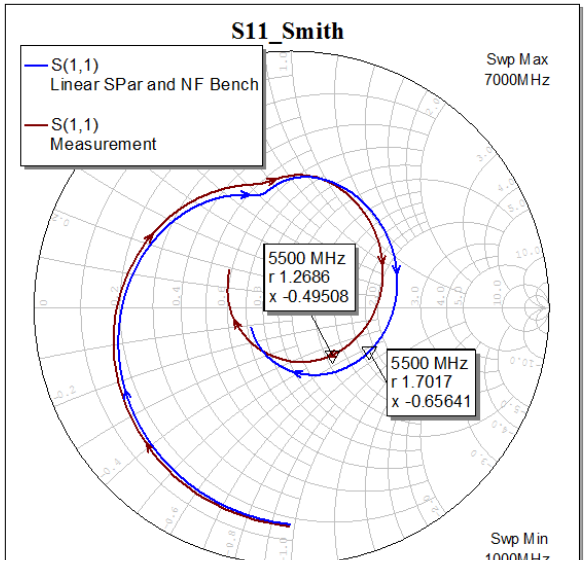

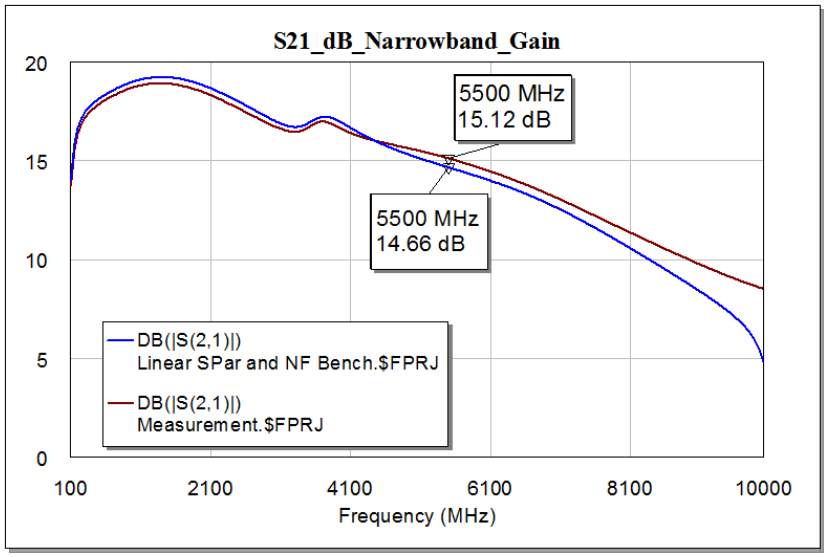

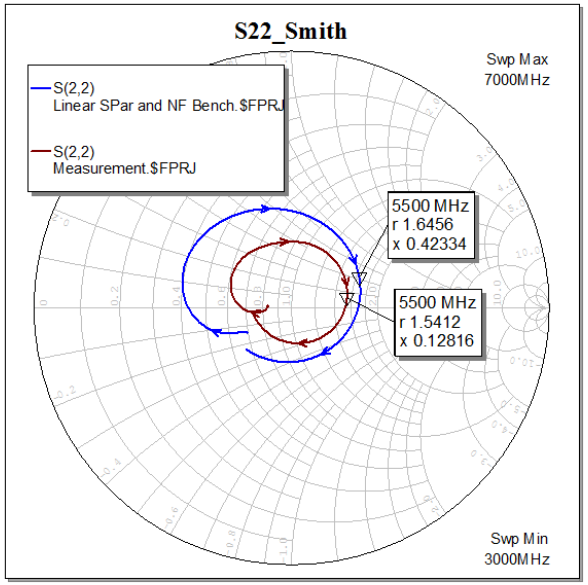

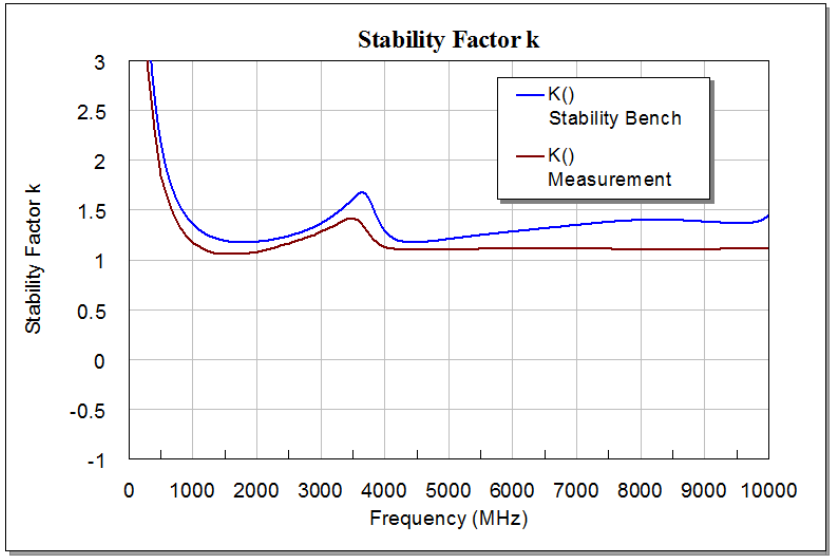

NF, P1dB, IP3 Simulation

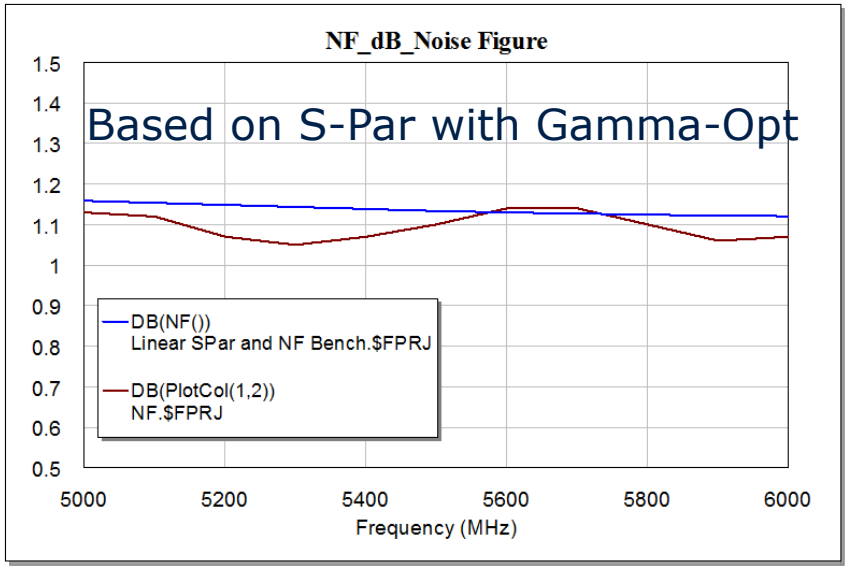

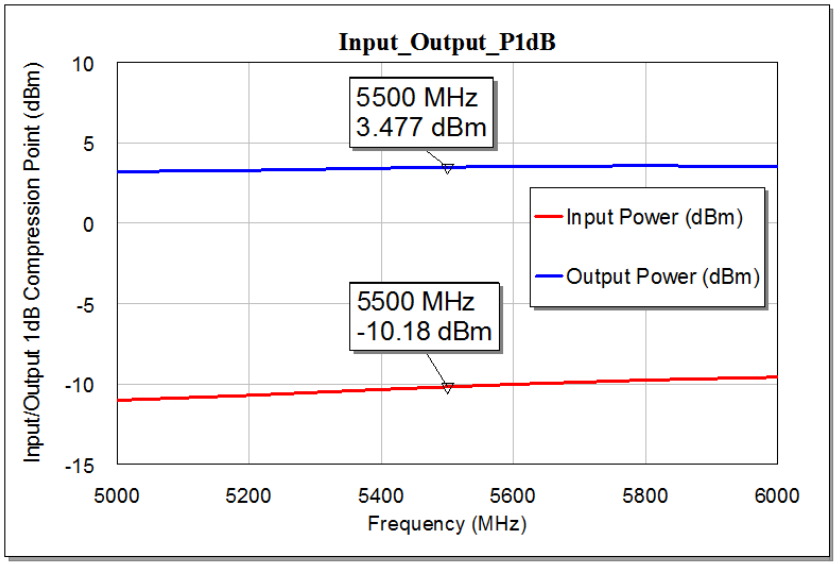

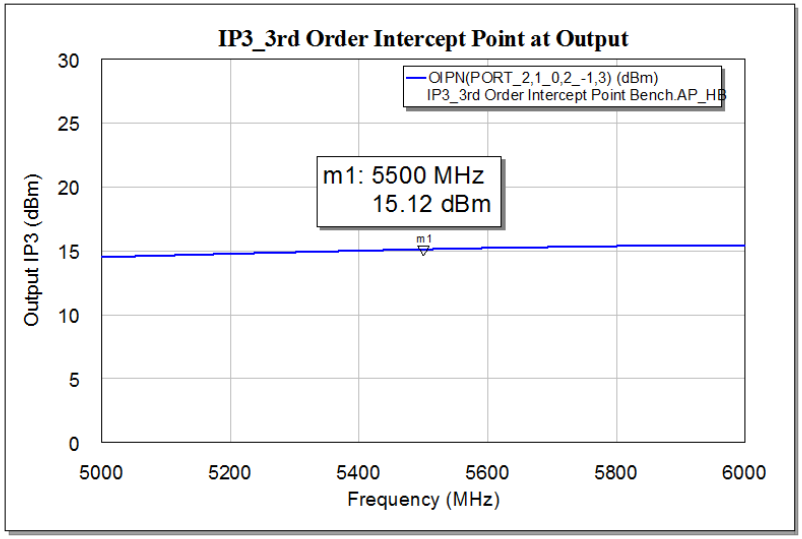

Further Work…

- SMA-to-PCB RF line transition → EM Simulation
- SMA-to-PCB ground transition → EM Simulation
- Deembedding and calibration uncertainty
- Study of non-ideal lossy substrate material above 8GHz
- Improvement Noise Parameter in spice model
- Provide simple simulation environment for circuit designer to enable fast LNA design

ENERGY EFFICIENCY
MOBILITY
SECURITY

Innovative semiconductor solutions for energy efficiency, mobility and security.



