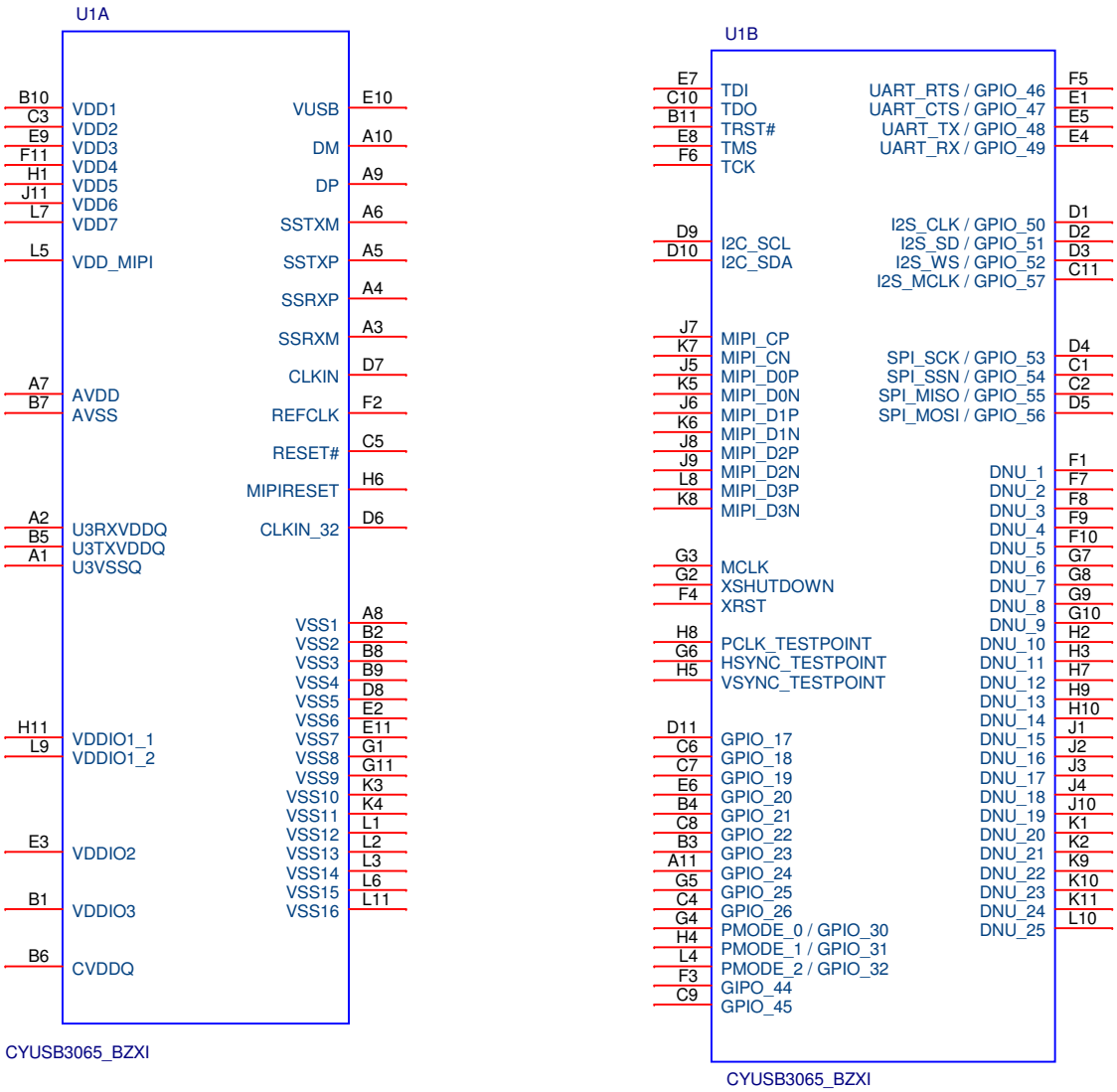


NOTE:
The same symbol can be used for CYUSB3065-BZXC also

| CYPRESS SEMICONDUCTOR © 2014 | | |
|---|---|---|
| Title: CYUSB3065-BZXI OrCAD Symbol | | |
| Size: A4 | Document Number | Rev: 1.1 |
| Date: Thursday, February 05, 2015 | Sheet 1 of 2 | |

| Revision | Description of the change |
|---|---|
| 1.1 | 1. Grouped the pins by function and arranged alphabetically<br>2. Pin B4 has been corrected from VSS to GPIO21 |
| | |

CYPRESS SEMICONDUCTOR © 2014

Title: REVISION HISTORY

Size: A4 | Document Number | Rev: 1.1

Date: Thursday, February 05, 2015 | Sheet 2 of 2