# BFP720ESD

Robust Low Noise Silicon Germanium Bipolar RF Transistor

## Data Sheet

Revision 1.1, 2012-10-15

RF & Protection Devices

**Edition 2012-10-15**

**Published by**
**Infineon Technologies AG**
**81726 Munich, Germany**

**© 2012 Infineon Technologies AG**
**All Rights Reserved.**

### Legal Disclaimer

The information given in this document shall in no event be regarded as a guarantee of conditions or characteristics. With respect to any examples or hints given herein, any typical values stated herein and/or any information regarding the application of the device, Infineon Technologies hereby disclaims any and all warranties and liabilities of any kind, including without limitation, warranties of non-infringement of intellectual property rights of any third party.

### Information

For further information on technology, delivery terms and conditions and prices, please contact the nearest Infineon Technologies Office (**www.infineon.com**).

### Warnings

Due to technical requirements, components may contain dangerous substances. For information on the types in question, please contact the nearest Infineon Technologies Office.

Infineon Technologies components may be used in life-support devices or systems only with the express written approval of Infineon Technologies, if a failure of such components can reasonably be expected to cause the failure of that life-support device or system or to affect the safety or effectiveness of that device or system. Life support devices or systems are intended to be implanted in the human body or to support and/or maintain and sustain and/or protect human life. If they fail, it is reasonable to assume that the health of the user or other persons may be endangered.

**BFP720ESD, Robust Low Noise Silicon Germanium Bipolar RF Transistor**

**Revision History: 2012-10-15, Revision 1.1**

| Page | Subjects (changes since previous revision) |
|---|---|
| | This data sheet replaces the revision from 2010-06-29.<br>The product itself has not been changed and the device characteristics remain unchanged.<br>Only the product description and information available in the data sheet have been expanded and updated. |
| | |
| | |
| | |
| | |
| | |
| | |

**Trademarks of Infineon Technologies AG**

AURIX™, C166™, CanPAK™, CIPOS™, CIPURSE™, EconoPACK™, CoolMOS™, CoolSET™, CORECONTROL™, CROSSAVE™, DAVE™, DI-POL™, EasyPIM™, EconoBRIDGE™, EconoDUAL™, EconoPIM™, EconoPACK™, EiceDRIVER™, eupec™, FCOS™, HITFET™, HybridPACK™, I²RF™, ISOFACE™, IsoPACK™, MIPAQ™, ModSTACK™, my-d™, NovalithIC™, OptiMOS™, ORIGA™, POWERCODE™; PRIMARION™, PrimePACK™, PrimeSTACK™, PRO-SIL™, PROFET™, RASIC™, ReverSave™, SatRIC™, SIEGET™, SINDRION™, SIPMOS™, SmartLEWIS™, SOLID FLASH™, TEMPFET™, thinQ!™, TRENCHSTOP™, TriCore™.

**Other Trademarks**

Advance Design System™ (ADS) of Agilent Technologies, AMBA™, ARM™, MULTI-ICE™, KEIL™, PRIMECELL™, REALVIEW™, THUMB™, µVision™ of ARM Limited, UK. AUTOSAR™ is licensed by AUTOSAR development partnership. Bluetooth™ of Bluetooth SIG Inc. CAT-iq™ of DECT Forum. COLOSSUS™, FirstGPS™ of Trimble Navigation Ltd. EMV™ of EMVCo, LLC (Visa Holdings Inc.). EPCOS™ of Epcos AG. FLEXGO™ of Microsoft Corporation. FlexRay™ is licensed by FlexRay Consortium. HYPERTERMINAL™ of Hilgraeve Incorporated. IEC™ of Commission Electrotechnique Internationale. IrDA™ of Infrared Data Association Corporation. ISO™ of INTERNATIONAL ORGANIZATION FOR STANDARDIZATION. MATLAB™ of MathWorks, Inc. MAXIM™ of Maxim Integrated Products, Inc. MICROTEC™, NUCLEUS™ of Mentor Graphics Corporation. MIPI™ of MIPI Alliance, Inc. MIPS™ of MIPS Technologies, Inc., USA. muRata™ of MURATA MANUFACTURING CO., MICROWAVE OFFICE™ (MWO) of Applied Wave Research Inc., OmniVision™ of OmniVision Technologies, Inc. Openwave™ Openwave Systems Inc. RED HAT™ Red Hat, Inc. RFMD™ RF Micro Devices, Inc. SIRIUS™ of Sirius Satellite Radio Inc. SOLARIS™ of Sun Microsystems, Inc. SPANSION™ of Spansion LLC Ltd. Symbian™ of Symbian Software Limited. TAIYO YUDEN™ of Taiyo Yuden Co. TEAKLITE™ of CEVA, Inc. TEKTRONIX™ of Tektronix Inc. TOKO™ of TOKO KABUSHIKI KAISHA TA. UNIX™ of X/Open Company Limited. VERILOG™, PALLADIUM™ of Cadence Design Systems, Inc. VLYNQ™ of Texas Instruments Incorporated. VXWORKS™, WIND RIVER™ of WIND RIVER SYSTEMS, INC. ZETEX™ of Diodes Zetex Limited.

Last Trademarks Update 2011-11-11

# Table of Contents

**Table of Contents** . . . . 4
**List of Figures** . . . . 5
**List of Tables** . . . . 6
**1 Product Brief** . . . . 7
**2 Features** . . . . 8
**3 Maximum Ratings** . . . . 9
**4 Thermal Characteristics** . . . . 10
**5 Electrical Characteristics** . . . . 11
5.1 DC Characteristics . . . . 11
5.2 General AC Characteristics . . . . 11
5.3 Frequency Dependent AC Characteristics . . . . 12
5.4 Characteristic DC Diagrams . . . . 17
5.5 Characteristic AC Diagrams . . . . 20
**6 Simulation Data** . . . . 26
**7 Package Information SOT343** . . . . 27

# List of Figures

Figure 4-1 Total Power Dissipation $P_{tot} = f(T_s)$ . . . 10
Figure 5-1 BFP720ESD Testing Circuit . . . 12
Figure 5-2 Collector Current vs. Collector Emitter Voltage $I_C = f(V_{CE})$, $I_B$ = Parameter in µA . . . 17
Figure 5-3 DC Current Gain $h_{FE} = f(I_C)$, $V_{CE}$ = 3 V . . . 17
Figure 5-4 Collector Current vs. Base Emitter Voltage $I_C = f(V_{BE})$, $V_{CE}$ = 2 V . . . 18
Figure 5-5 Base Current vs. Base Emitter Forward Voltage $I_B = f(V_{BE})$, $V_{CE}$ = 2 V . . . 18
Figure 5-6 Base Current vs. Base Emitter Reverse Voltage $I_B = f(V_{EB})$, $V_{CE}$ = 2 V . . . 19
Figure 5-7 Transition Frequency $f_T = f(I_C)$, $f$ = 1 GHz, $V_{CE}$ = Parameter in V . . . 20
Figure 5-8 3rd Order Intercept Point $OIP_3 = f(I_C)$, $Z_S = Z_L$ = 50 Ω, $V_{CE}$, $f$ = Parameters . . . 20
Figure 5-9 Collector Base Capacitance $C_{CB} = f(V_{CB})$, $f$ = 1 MHz . . . 21
Figure 5-10 Gain $G_{ma}$, $G_{ms}$, $|S_{21}|^2 = f(f)$, $V_{CE}$ = 3 V, $I_C$ = 15 mA . . . 21
Figure 5-11 Maximum Power Gain $G_{max} = f(I_C)$, $V_{CE}$ = 3 V, $f$ = Parameter in GHz . . . 22
Figure 5-12 Maximum Power Gain $G_{max} = f(V_{CE})$, $I_C$ = 15 mA, $f$ = Parameter in GHz . . . 22
Figure 5-13 Input Matching $S_{11} = f(f)$, $V_{CE}$ = 3 V, $I_C$ = 5 / 15 mA . . . 23
Figure 5-14 Source Impedance for Minimum Noise Figure $Z_{opt} = f(f)$, $V_{CE}$ = 3 V, $I_C$ = 5 / 15 mA . . . 23
Figure 5-15 Output Matching $S_{22} = f(f)$, $V_{CE}$ = 3 V, $I_C$ = 5 / 15 mA . . . 24
Figure 5-16 Noise Figure $NF_{min} = f(f)$, $V_{CE}$ = 3 V, $I_C$ = 5 / 15 mA, $Z_S = Z_{opt}$ . . . 24
Figure 5-17 Noise Figure $NF_{min} = f(I_C)$, $V_{CE}$ = 3 V, $Z_S = Z_{opt}$, $f$ = Parameter in GHz . . . 25
Figure 5-18 Noise Figure $NF_{50} = f(I_C)$, $V_{CE}$ = 3 V, $Z_S$ = 50 Ω, $f$ = Parameter in GHz . . . 25
Figure 7-1 Package Outline . . . 27
Figure 7-2 Package Foot Print . . . 27
Figure 7-3 Marking Description (Marking BFP720ESD: T3s) . . . 27
Figure 7-4 Tape Dimensions . . . 27

# List of Tables

Table 3-1 Maximum Ratings at $T_A$ = 25 °C (unless otherwise specified). . . . . 9
Table 4-1 Thermal Resistance . . . . . 10
Table 5-1 DC Characteristics at $T_A$ = 25 °C . . . . . 11
Table 5-2 General AC Characteristics at $T_A$ = 25 °C . . . . . 11
Table 5-3 AC Characteristics, $V_{CE}$ = 3 V, $f$ = 150 MHz . . . . . 12
Table 5-4 AC Characteristics, $V_{CE}$ = 3 V, $f$ = 450 MHz . . . . . 13
Table 5-5 AC Characteristics, $V_{CE}$ = 3 V, $f$ = 900 MHz . . . . . 13
Table 5-6 AC Characteristics, $V_{CE}$ = 3 V, $f$ = 1.5 GHz . . . . . 14
Table 5-7 AC Characteristics, $V_{CE}$ = 3 V, $f$ = 1.9 GHz . . . . . 14
Table 5-8 AC Characteristics, $V_{CE}$ = 3 V, $f$ = 2.4 GHz . . . . . 15
Table 5-9 AC Characteristics, $V_{CE}$ = 3 V, $f$ = 3.5 GHz . . . . . 15
Table 5-10 AC Characteristics, $V_{CE}$ = 3 V, $f$ = 5.5 GHz . . . . . 16
Table 5-11 AC Characteristics, $V_{CE}$ = 3 V, $f$ = 10 GHz . . . . . 16

# 1 Product Brief

The BFP720ESD is a very low noise wideband NPN bipolar RF transistor. The device is based on Infineon's reliable high volume silicon germanium carbon (SiGe:C) heterojunction bipolar technology. The collector design supports voltages up to $V_{CEO}$ = 4.2 V and currents up to $I_C$ = 30 mA. The device is especially suited for mobile applications in which low power consumption is a key requirement. The typical transition frequency is approximately 43 GHz, hence the device offers high power gain at frequencies up to 12 GHz in amplifier applications. The transistor is fitted with internal protection circuits, which enhance the robustness against electrostatic discharge (ESD) and high levels of RF input power. The device is housed in an easy to use plastic package with visible leads.

# 2 Features

- Robust very low noise amplifier based on Infineon´s reliable, high volume SiGe:C wafer technology
- 2 kV ESD robustness (HBM) due to integrated protection circuits
- High maximum RF input power of 21 dBm
- 0.65 dB minimum noise figure typical at 2.4 GHz, 0.9 dB at 5.5 GHz, 5mA
- 26 dB maximum gain $G_{ms}$ typical at 2.4 GHz, 19.5 dB $G_{ma}$ at 5.5 GHz, 15 mA
- 22 dBm $OIP_3$ typical at 5.5 GHz, 15 mA
- Easy to use Pb-free (RoHS compliant) and halogen-free standard package with visible leads
- Qualification report according to AEC-Q101 available

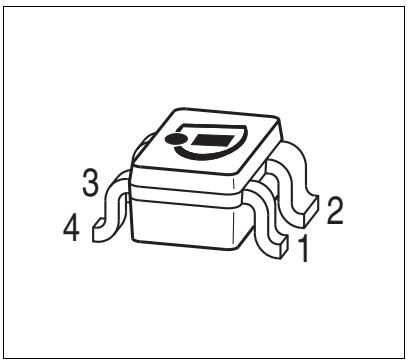


RoHS

### Applications

As Low Noise Amplifier (LNA) in

- Mobile, portable and fixed connectivity applications: WLAN 802.11a/b/g/n, WiMax 2.5/3.5/5 GHz, UWB, Bluetooth
- Satellite communication systems: Navigation (GPS, Glonass), satellite radio (SDARs, DAB) and LNB
- 3G/4G UMTS/LTE mobile phone applications
- Multimedia applications such as mobile/portable TV, CATV, FM Radio
- ISM applications like RKE, AMR and Zigbee, as well as for emerging wireless applications

As discrete active mixer, amplifier in VCO´s and buffer amplifier.

***Attention: ESD (Electrostatic discharge) sensitive device, observe handling precautions***

| Product Name | Package | Pin configuration | | | | Marking |
|---|---|---|---|---|---|---|
| BFP720ESD | SOT343 | 1 = B | 2 = E | 3 = C | 4 = E | T3s |

# 3 Maximum Ratings

**Table 3-1 Maximum Ratings at $T_A$ = 25 °C (unless otherwise specified)**

| Parameter | Symbol | Values | | | Unit | Note / Test Condition |
|---|---|---|---|---|---|---|
| | | Min. | Typ. | Max. | | |
| Collector emitter voltage | $V_{CEO}$ | | | | | Open base |
| | | – | – | 4.2 | V | $T_A$ = 25 °C |
| | | – | – | 3.7 | V | $T_A$ = -55 °C |
| Collector base voltage[1)] | $V_{CBO}$ | | | | | Open emitter |
| | | – | – | 4.9 | V | $T_A$ = 25 °C |
| | | – | – | 4.4 | V | $T_A$ = -55 °C |
| Collector emitter voltage[2)] | $V_{CES}$ | | | | | E-B short circuited |
| | | – | – | 4.2 | V | $T_A$ = 25 °C |
| | | – | – | 3.7 | V | $T_A$ = -55 °C |
| Base current[3)] | $I_B$ | -10 | | 3 | mA | – |
| Collector current | $I_C$ | – | – | 30 | mA | – |
| RF input power[4)] | $P_{RFin}$ | – | – | 21 | dBm | – |
| ESD stress pulse[5)] | $V_{ESD}$ | -2 | – | 2 | kV | HBM, all pins, acc. to JESD22-A114 |
| Total power dissipation[6)] | $P_{tot}$ | – | – | 100 | mW | $T_S \leq$ 108 °C |
| Junction temperature | $T_J$ | – | – | 150 | °C | – |
| Storage temperature | $T_{Stg}$ | -55 | – | 150 | °C | – |

1) Low $V_{CBO}$ due to integrated protection circuits.
2) $V_{CES}$ is identical to $V_{CEO}$ due to integrated protection circuits.
3) Sustainable reverse bias current is high due to integrated protection circuits.
4) RF input power is high due to integrated protection circuits.
5) ESD robustness is high due to integrated protection circuits.
6) $T_S$ is the soldering point temperature. $T_S$ is measured on the emitter lead at the soldering point of the pcb.

***Attention: Stresses above the max. values listed here may cause permanent damage to the device. Exposure to absolute maximum rating conditions for extended periods may affect device reliability. Maximum ratings are absolute ratings; exceeding only one of these values may cause irreversible damage to the integrated circuit.***

# 4 Thermal Characteristics

**Table 4-1 Thermal Resistance**

| Parameter | Symbol | Values | | | Unit | Note / Test Condition |
|---|---|---|---|---|---|---|
| | | Min. | Typ. | Max. | | |
| Junction - soldering point[1)] | $R_{thJS}$ | – | 415 | – | K/W | – |

1) For calculation of $R_{thJA}$ please refer to Application Note AN077 (Thermal Resistance Calculation)

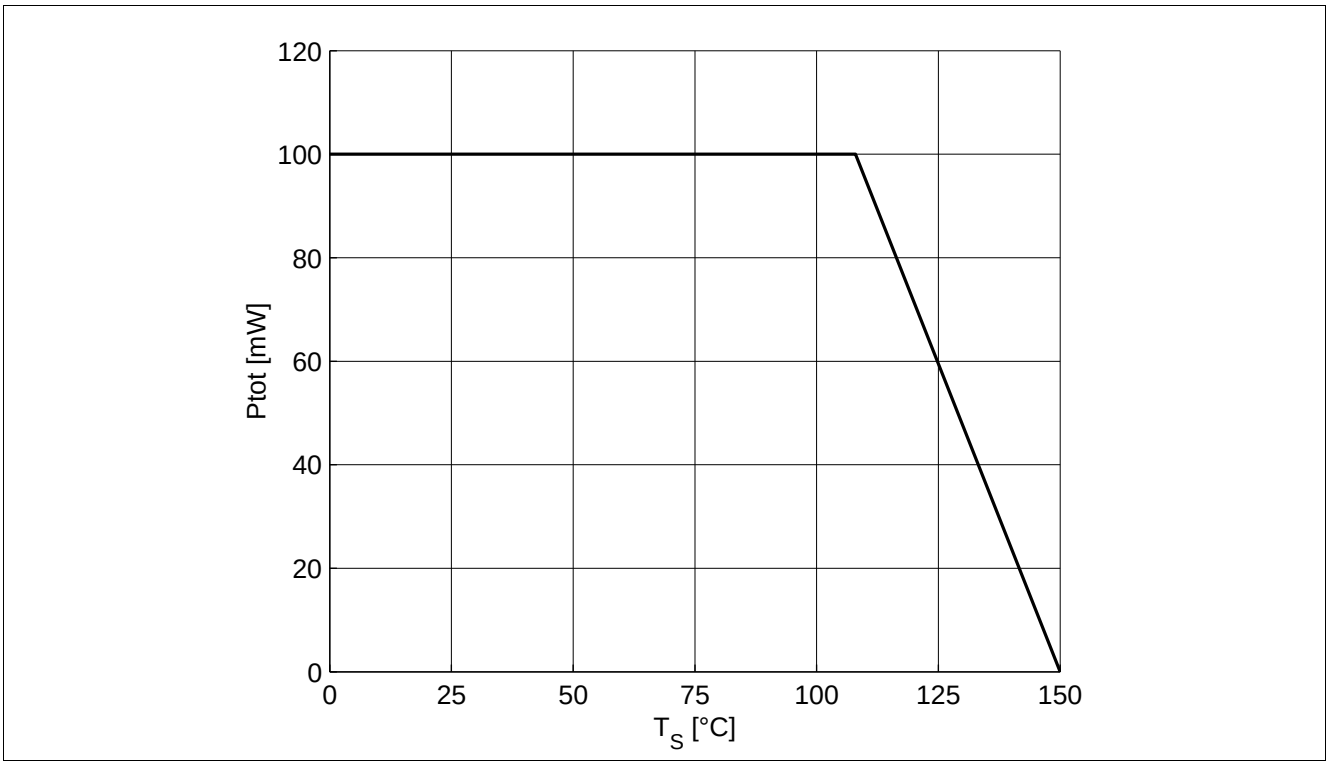


**Figure 4-1 Total Power Dissipation $P_{tot} = f(T_S)$**

# 5 Electrical Characteristics

## 5.1 DC Characteristics

**Table 5-1 DC Characteristics at $T_A$ = 25 °C**

| Parameter | Symbol | Values | | | Unit | Note / Test Condition |
|---|---|---|---|---|---|---|
| | | Min. | Typ. | Max. | | |
| Collector emitter breakdown voltage | $V_{(BR)CEO}$ | 4.2 | 4.7 | – | V | $I_C$ = 1 mA, $I_B$ = 0<br>Open base |
| Collector emitter leakage current | $I_{CES}$ | – | – | 400 | nA | $V_{CE}$ = 2 V, $V_{BE}$ = 0<br>E-B short circuited |
| Collector base leakage current | $I_{CBO}$ | – | – | 400 | nA | $V_{CB}$ = 2 V, $I_E$ = 0<br>Open emitter |
| Emitter base leakage current | $I_{EBO}$ | – | – | 10 | µA | $V_{EB}$ = 0.5 V, $I_C$ = 0<br>Open collector |
| DC current gain | $h_{FE}$ | 160 | 250 | 400 | | $V_{CE}$ = 3 V, $I_C$ = 15 mA<br>Pulse measured |

## 5.2 General AC Characteristics

**Table 5-2 General AC Characteristics at $T_A$ = 25 °C**

| Parameter | Symbol | Values | | | Unit | Note / Test Condition |
|---|---|---|---|---|---|---|
| | | Min. | Typ. | Max. | | |
| Transition frequency | $f_T$ | – | 43 | – | GHz | $V_{CE}$ = 3 V, $I_C$ = 15 mA<br>$f$ = 1 GHz |
| Collector base capacitance | $C_{CB}$ | – | 0.05 | – | pF | $V_{CB}$ = 3 V, $V_{BE}$ = 0<br>$f$ = 1 MHz<br>Emitter grounded |
| Collector emitter capacitance | $C_{CE}$ | – | 0.4 | – | pF | $V_{CE}$ = 3 V, $V_{BE}$ = 0<br>$f$ = 1 MHz<br>Base grounded |
| Emitter base capacitance | $C_{EB}$ | – | 0.45 | – | pF | $V_{EB}$ = 0.4 V, $V_{CB}$ = 0<br>$f$ = 1 MHz<br>Collector grounded |

## 5.3 Frequency Dependent AC Characteristics

Measurement setup is a test fixture with Bias T's in a 50 Ω system, $T_A$ = 25 °C

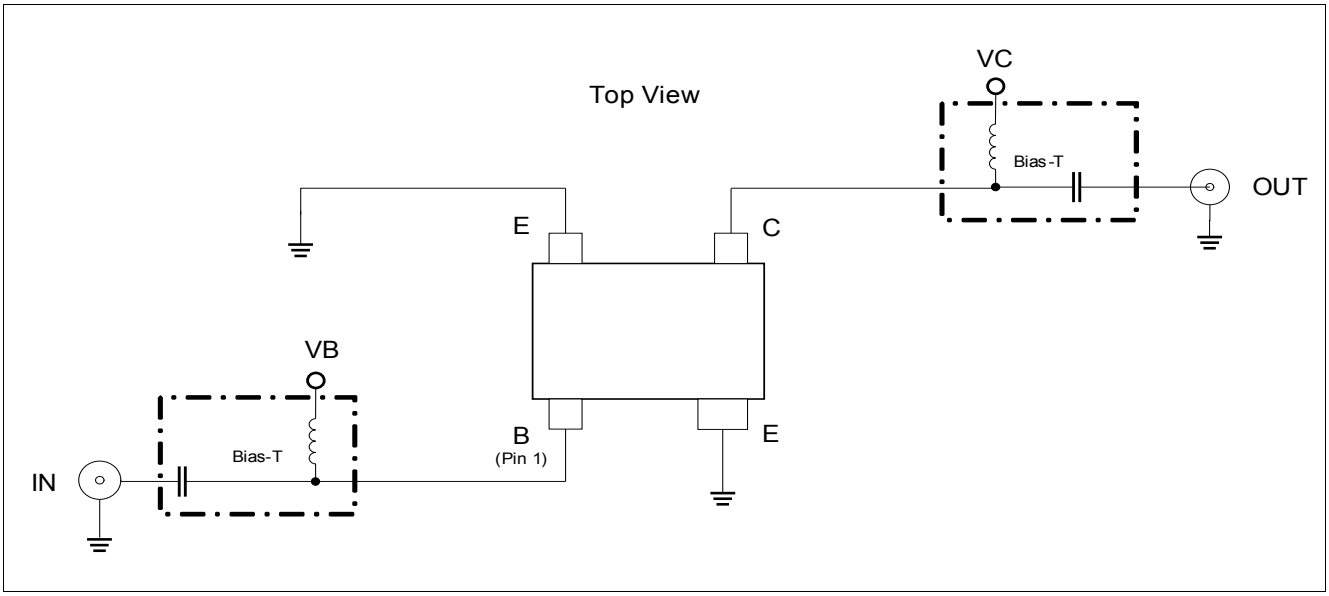


**Figure 5-1 BFP720ESD Testing Circuit**

**Table 5-3 AC Characteristics, $V_{CE}$ = 3 V, $f$ = 150 MHz**

| Parameter | Symbol | Values | | | Unit | Note / Test Condition |
|---|---|---|---|---|---|---|
| | | Min. | Typ. | Max. | | |
| **Maximum power gain** | | | | | dB | |
| Low noise operation point | $G_{ms}$ | – | 34.5 | – | | $I_C$ = 5 mA |
| High linearity operation point | $G_{ms}$ | – | 38.5 | – | | $I_C$ = 15 mA |
| **Transducer gain** | | | | | dB | $Z_S = Z_L$ = 50 Ω |
| Low noise operation point | $S_{21}$ | – | 23.5 | – | | $I_C$ = 5 mA |
| High linearity operation point | $S_{21}$ | – | 30.5 | – | | $I_C$ = 15 mA |
| **Minimum noise figure** | | | | | dB | $Z_S = Z_{opt}$ |
| Minimum noise figure | $NF_{min}$ | – | 0.55 | – | | $I_C$ = 5 mA |
| Associated gain | $G_{ass}$ | – | 30.5 | – | | $I_C$ = 5 mA |
| **Linearity** | | | | | dBm | $Z_S = Z_L$ = 50 Ω |
| 1 dB gain compression point | $OP_{1dB}$ | – | 6.5 | – | | $I_C$ = 15 mA |
| 3rd order intercept point | $OIP_3$ | – | 21.5 | – | | $I_C$ = 15 mA |

**Table 5-4 AC Characteristics, $V_{CE}$ = 3 V, $f$ = 450 MHz**

| Parameter | Symbol | Values | | | Unit | Note / Test Condition |
|---|---|---|---|---|---|---|
| | | Min. | Typ. | Max. | | |
| **Maximum power gain** | | | | | dB | |
| Low noise operation point | $G_{ms}$ | – | 30 | – | | $I_C$ = 5 mA |
| High linearity operation point | $G_{ms}$ | – | 33.5 | – | | $I_C$ = 15 mA |
| **Transducer gain** | | | | | dB | $Z_S = Z_L$ = 50 Ω |
| Low noise operation point | $S_{21}$ | – | 23 | – | | $I_C$ = 5 mA |
| High linearity operation point | $S_{21}$ | – | 30 | – | | $I_C$ = 15 mA |
| **Minimum noise figure** | | | | | dB | $Z_S = Z_{opt}$ |
| Minimum noise figure | $NF_{min}$ | – | 0.55 | – | | $I_C$ = 5 mA |
| Associated gain | $G_{ass}$ | – | 29 | – | | $I_C$ = 5 mA |
| **Linearity** | | | | | dBm | $Z_S = Z_L$ = 50 Ω |
| 1 dB gain compression point | $OP_{1dB}$ | – | 6.5 | – | | $I_C$ = 15 mA |
| 3rd order intercept point | $OIP_3$ | – | 21.5 | – | | $I_C$ = 15 mA |

**Table 5-5 AC Characteristics, $V_{CE}$ = 3 V, $f$ = 900 MHz**

| Parameter | Symbol | Values | | | Unit | Note / Test Condition |
|---|---|---|---|---|---|---|
| | | Min. | Typ. | Max. | | |
| **Maximum power gain** | | | | | dB | |
| Low noise operation point | $G_{ms}$ | – | 26.5 | – | | $I_C$ = 5 mA |
| High linearity operation point | $G_{ms}$ | – | 30.5 | – | | $I_C$ = 15 mA |
| **Transducer gain** | | | | | dB | $Z_S = Z_L$ = 50 Ω |
| Low noise operation point | $S_{21}$ | – | 22.5 | – | | $I_C$ = 5 mA |
| High linearity operation point | $S_{21}$ | – | 28 | – | | $I_C$ = 15 mA |
| **Minimum noise figure** | | | | | dB | $Z_S = Z_{opt}$ |
| Minimum noise figure | $NF_{min}$ | – | 0.6 | – | | $I_C$ = 5 mA |
| Associated gain | $G_{ass}$ | – | 27 | – | | $I_C$ = 5 mA |
| **Linearity** | | | | | dBm | $Z_S = Z_L$ = 50 Ω |
| 1 dB gain compression point | $OP_{1dB}$ | – | 6 | – | | $I_C$ = 15 mA |
| 3rd order intercept point | $OIP_3$ | – | 21.5 | – | | $I_C$ = 15 mA |

**Table 5-6 AC Characteristics, $V_{CE}$ = 3 V, $f$ = 1.5 GHz**

| Parameter | Symbol | Values | | | Unit | Note / Test Condition |
|---|---|---|---|---|---|---|
| | | Min. | Typ. | Max. | | |
| **Maximum power gain** | | | | | dB | |
| Low noise operation point | $G_{ms}$ | – | 24.5 | – | | $I_C$ = 5 mA |
| High linearity operation point | $G_{ms}$ | – | 28 | – | | $I_C$ = 15 mA |
| **Transducer gain** | | | | | dB | $Z_S = Z_L$ = 50 Ω |
| Low noise operation point | $S_{21}$ | – | 21.5 | – | | $I_C$ = 5 mA |
| High linearity operation point | $S_{21}$ | – | 26 | – | | $I_C$ = 15 mA |
| **Minimum noise figure** | | | | | dB | $Z_S = Z_{opt}$ |
| Minimum noise figure | $NF_{min}$ | – | 0.6 | – | | $I_C$ = 5 mA |
| Associated gain | $G_{ass}$ | – | 24.5 | – | | $I_C$ = 5 mA |
| **Linearity** | | | | | dBm | $Z_S = Z_L$ = 50 Ω |
| 1 dB gain compression point | $OP_{1dB}$ | – | 6 | – | | $I_C$ = 15 mA |
| 3rd order intercept point | $OIP_3$ | – | 21.5 | – | | $I_C$ = 15 mA |

**Table 5-7 AC Characteristics, $V_{CE}$ = 3 V, $f$ = 1.9 GHz**

| Parameter | Symbol | Values | | | Unit | Note / Test Condition |
|---|---|---|---|---|---|---|
| | | Min. | Typ. | Max. | | |
| **Maximum power gain** | | | | | dB | |
| Low noise operation point | $G_{ms}$ | – | 23.5 | – | | $I_C$ = 5 mA |
| High linearity operation point | $G_{ms}$ | – | 27 | – | | $I_C$ = 15 mA |
| **Transducer gain** | | | | | dB | $Z_S = Z_L$ = 50 Ω |
| Low noise operation point | $S_{21}$ | – | 21 | – | | $I_C$ = 5 mA |
| High linearity operation point | $S_{21}$ | – | 24.5 | – | | $I_C$ = 15 mA |
| **Minimum noise figure** | | | | | dB | $Z_S = Z_{opt}$ |
| Minimum noise figure | $NF_{min}$ | – | 0.6 | – | | $I_C$ = 5 mA |
| Associated gain | $G_{ass}$ | – | 23.5 | – | | $I_C$ = 5 mA |
| **Linearity** | | | | | dBm | $Z_S = Z_L$ = 50 Ω |
| 1 dB gain compression point | $OP_{1dB}$ | – | 6.5 | – | | $I_C$ = 15 mA |
| 3rd order intercept point | $OIP_3$ | – | 22 | – | | $I_C$ = 15 mA |

**Table 5-8 AC Characteristics, $V_{CE}$ = 3 V, $f$ = 2.4 GHz**

| Parameter | Symbol | Values | | | Unit | Note / Test Condition |
|---|---|---|---|---|---|---|
| | | Min. | Typ. | Max. | | |
| **Maximum power gain** | | | | | dB | |
| Low noise operation point | $G_{ms}$ | – | 22.5 | – | | $I_C$ = 5 mA |
| High linearity operation point | $G_{ms}$ | – | 26 | – | | $I_C$ = 15 mA |
| **Transducer gain** | | | | | dB | $Z_S = Z_L$ = 50 Ω |
| Low noise operation point | $S_{21}$ | – | 20 | – | | $I_C$ = 5 mA |
| High linearity operation point | $S_{21}$ | – | 23 | – | | $I_C$ = 15 mA |
| **Minimum noise figure** | | | | | dB | $Z_S = Z_{opt}$ |
| Minimum noise figure | $NF_{min}$ | – | 0.65 | – | | $I_C$ = 5 mA |
| Associated gain | $G_{ass}$ | – | 21.5 | – | | $I_C$ = 5 mA |
| **Linearity** | | | | | dBm | $Z_S = Z_L$ = 50 Ω |
| 1 dB gain compression point | $OP_{1dB}$ | – | 7.5 | – | | $I_C$ = 15 mA |
| 3rd order intercept point | $OIP_3$ | – | 22.5 | – | | $I_C$ = 15 mA |

**Table 5-9 AC Characteristics, $V_{CE}$ = 3 V, $f$ = 3.5 GHz**

| Parameter | Symbol | Values | | | Unit | Note / Test Condition |
|---|---|---|---|---|---|---|
| | | Min. | Typ. | Max. | | |
| **Maximum power gain** | | | | | dB | |
| Low noise operation point | $G_{ms}$ | – | 21.5 | – | | $I_C$ = 5 mA |
| High linearity operation point | $G_{ms}$ | – | 24 | – | | $I_C$ = 15 mA |
| **Transducer gain** | | | | | dB | $Z_S = Z_L$ = 50 Ω |
| Low noise operation point | $S_{21}$ | – | 18 | – | | $I_C$ = 5 mA |
| High linearity operation point | $S_{21}$ | – | 20 | – | | $I_C$ = 15 mA |
| **Minimum noise figure** | | | | | dB | $Z_S = Z_{opt}$ |
| Minimum noise figure | $NF_{min}$ | – | 0.75 | – | | $I_C$ = 5 mA |
| Associated gain | $G_{ass}$ | – | 18.5 | – | | $I_C$ = 5 mA |
| **Linearity** | | | | | dBm | $Z_S = Z_L$ = 50 Ω |
| 1 dB gain compression point | $OP_{1dB}$ | – | 7.5 | – | | $I_C$ = 15 mA |
| 3rd order intercept point | $OIP_3$ | – | 22.5 | – | | $I_C$ = 15 mA |

**Table 5-10 AC Characteristics, $V_{CE}$ = 3 V, $f$ = 5.5 GHz**

| Parameter | Symbol | Values | | | Unit | Note / Test Condition |
|---|---|---|---|---|---|---|
| | | Min. | Typ. | Max. | | |
| **Maximum power gain** | | | | | dB | |
| Low noise operation point | $G_{ms}$ | – | 20 | – | | $I_C$ = 5 mA |
| High linearity operation point | $G_{ma}$ | – | 19.5 | – | | $I_C$ = 15 mA |
| **Transducer gain** | | | | | dB | $Z_S = Z_L$ = 50 Ω |
| Low noise operation point | $S_{21}$ | – | 14.5 | – | | $I_C$ = 5 mA |
| High linearity operation point | $S_{21}$ | – | 16 | – | | $I_C$ = 15 mA |
| **Minimum noise figure** | | | | | dB | $Z_S = Z_{opt}$ |
| Minimum noise figure | $NF_{min}$ | – | 0.9 | – | | $I_C$ = 5 mA |
| Associated gain | $G_{ass}$ | – | 14.5 | – | | $I_C$ = 5 mA |
| **Linearity** | | | | | dBm | $Z_S = Z_L$ = 50 Ω |
| 1 dB gain compression point | $OP_{1dB}$ | – | 8 | – | | $I_C$ = 15 mA |
| 3rd order intercept point | $OIP_3$ | – | 22 | – | | $I_C$ = 15 mA |

**Table 5-11 AC Characteristics, $V_{CE}$ = 3 V, $f$ = 10 GHz**

| Parameter | Symbol | Values | | | Unit | Note / Test Condition |
|---|---|---|---|---|---|---|
| | | Min. | Typ. | Max. | | |
| **Maximum power gain** | | | | | dB | |
| Low noise operation point | $G_{ms}$ | – | 15.5 | – | | $I_C$ = 5 mA |
| High linearity operation point | $G_{ms}$ | – | 15.5 | – | | $I_C$ = 15 mA |
| **Transducer gain** | | | | | dB | $Z_S = Z_L$ = 50 Ω |
| Low noise operation point | $S_{21}$ | – | 7.5 | – | | $I_C$ = 5 mA |
| High linearity operation point | $S_{21}$ | – | 9.5 | – | | $I_C$ = 15 mA |
| **Minimum noise figure** | | | | | dB | $Z_S = Z_{opt}$ |
| Minimum noise figure | $NF_{min}$ | – | 1.55 | – | | $I_C$ = 5 mA |
| Associated gain | $G_{ass}$ | – | 11 | – | | $I_C$ = 5 mA |
| **Linearity** | | | | | dBm | $Z_S = Z_L$ = 50 Ω |
| 1 dB gain compression point | $OP_{1dB}$ | – | 5.5 | – | | $I_C$ = 15 mA |
| 3rd order intercept point | $OIP_3$ | – | 20 | – | | $I_C$ = 15 mA |

**Notes**

1. *$G_{ms} = |S_{21} / S_{12}|$ for $k < 1$; $G_{ma} = |S_{21} / S_{12}|(k-(k^2-1)^{1/2})$ for $k > 1$*
2. *In order to get the $NF_{min}$ values stated in this chapter the test fixture losses have been subtracted from all measured results.*
3. *$OIP_3$ value depends on termination of all intermodulation frequency components. Termination used for this measurement is 50 Ω from 0.2 MHz to 12 GHz.*

## 5.4 Characteristic DC Diagrams

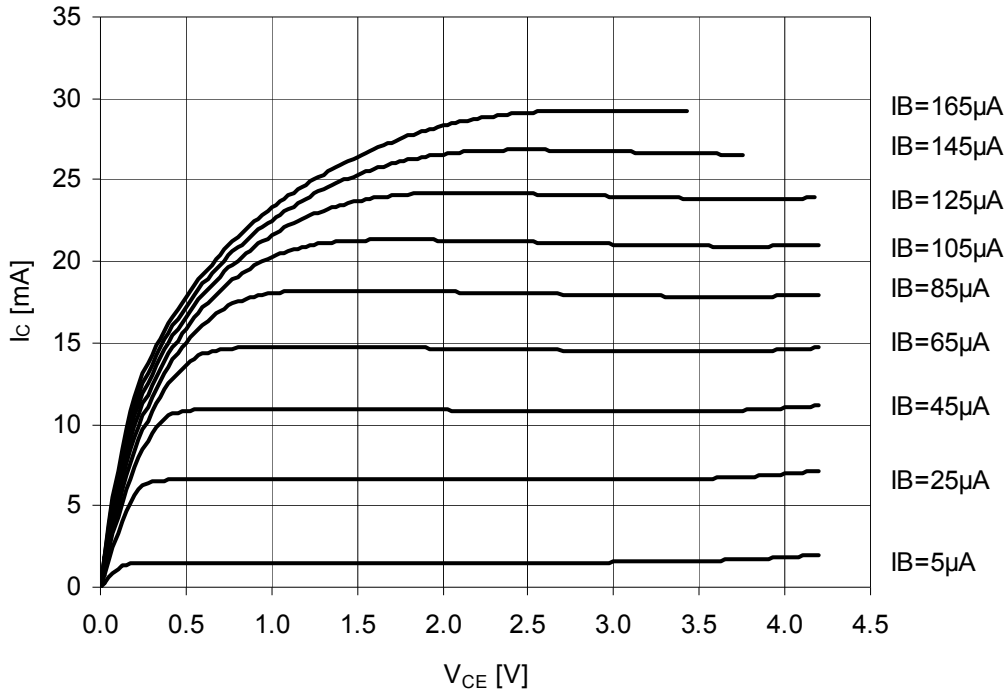


**Figure 5-2 Collector Current vs. Collector Emitter Voltage $I_C = f(V_{CE})$, $I_B$ = Parameter in µA**

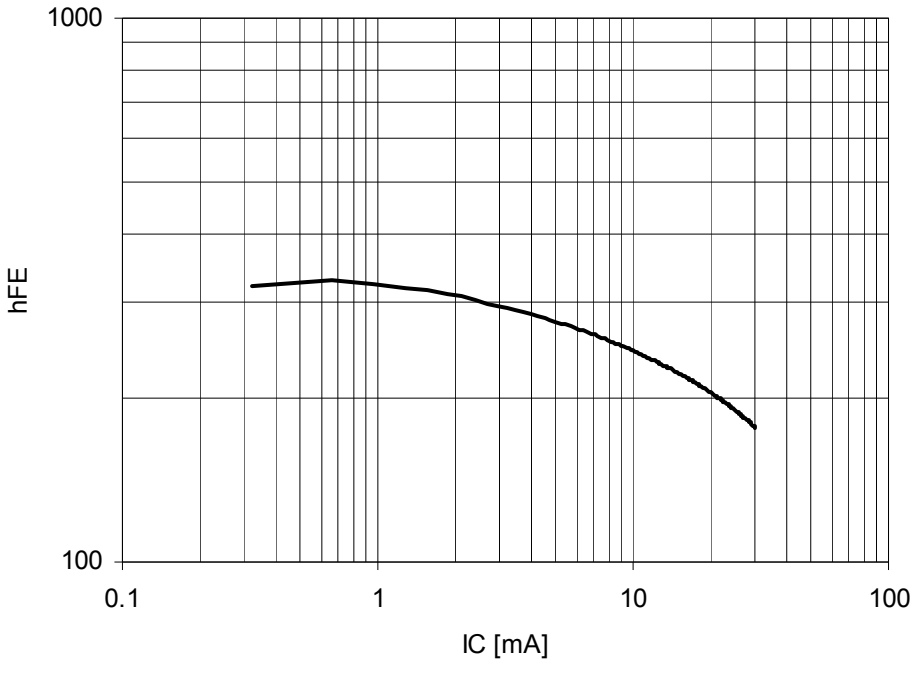


**Figure 5-3 DC Current Gain $h_{FE} = f(I_C)$, $V_{CE}$ = 3 V**

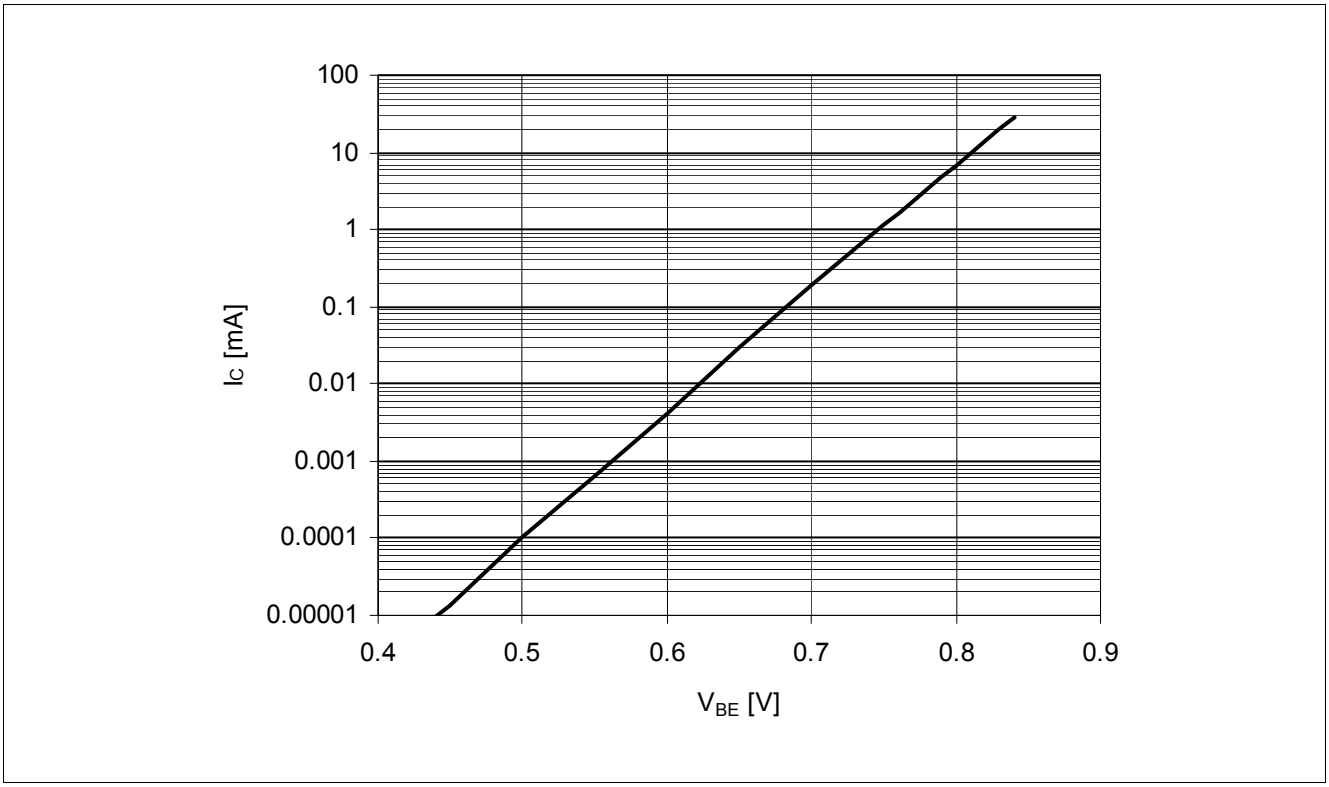


**Figure 5-4 Collector Current vs. Base Emitter Voltage $I_C = f(V_{BE})$, $V_{CE}$ = 2 V**

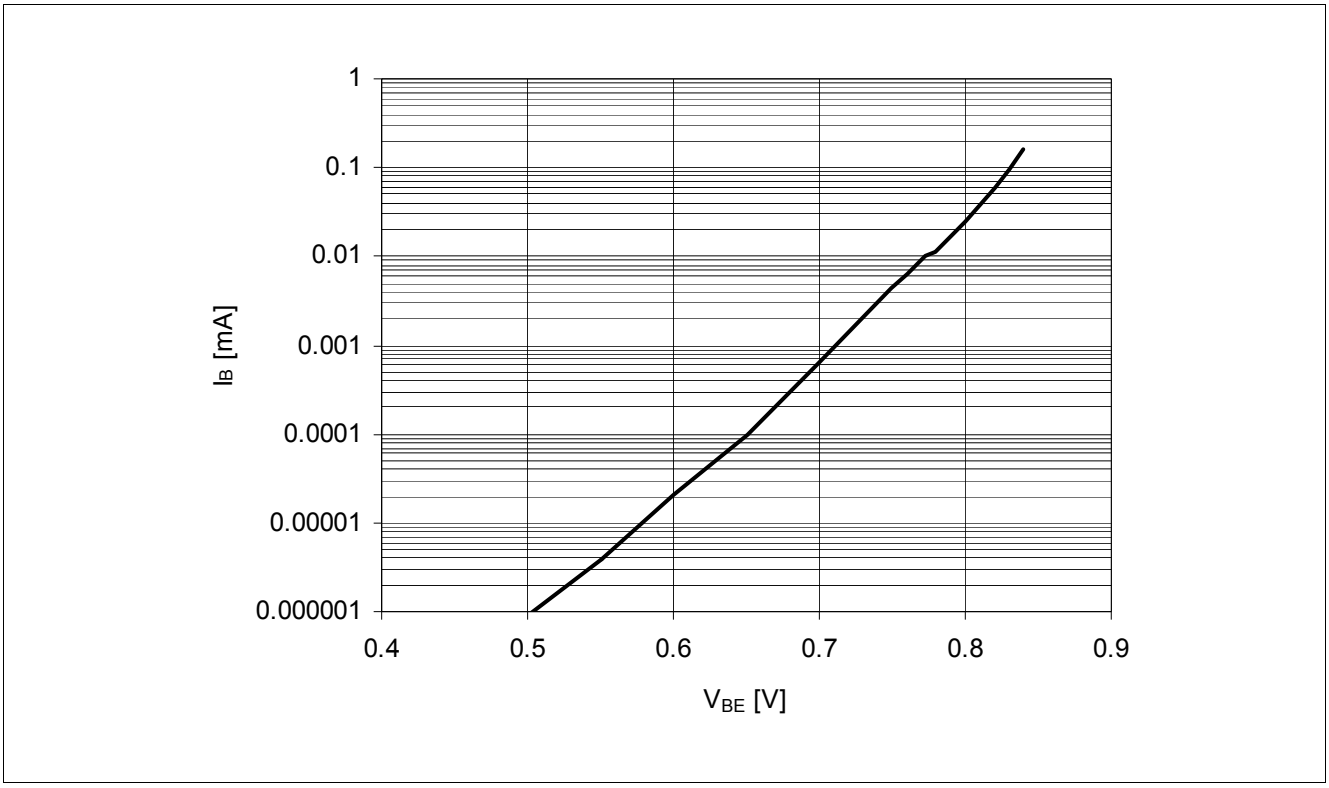


**Figure 5-5 Base Current vs. Base Emitter Forward Voltage $I_B = f(V_{BE})$, $V_{CE}$ = 2 V**

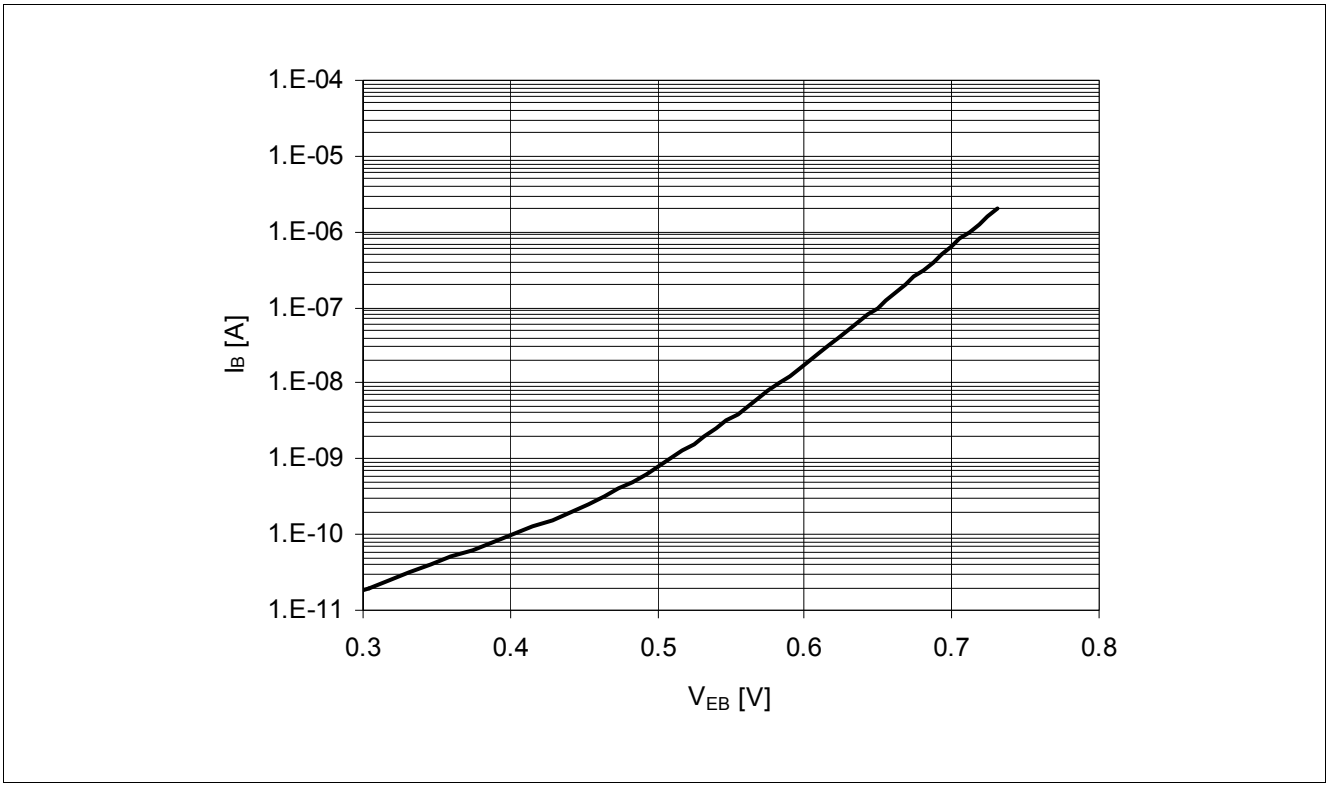


**Figure 5-6 Base Current vs. Base Emitter Reverse Voltage $I_B = f(V_{EB})$, $V_{CE}$ = 2 V**

## 5.5 Characteristic AC Diagrams

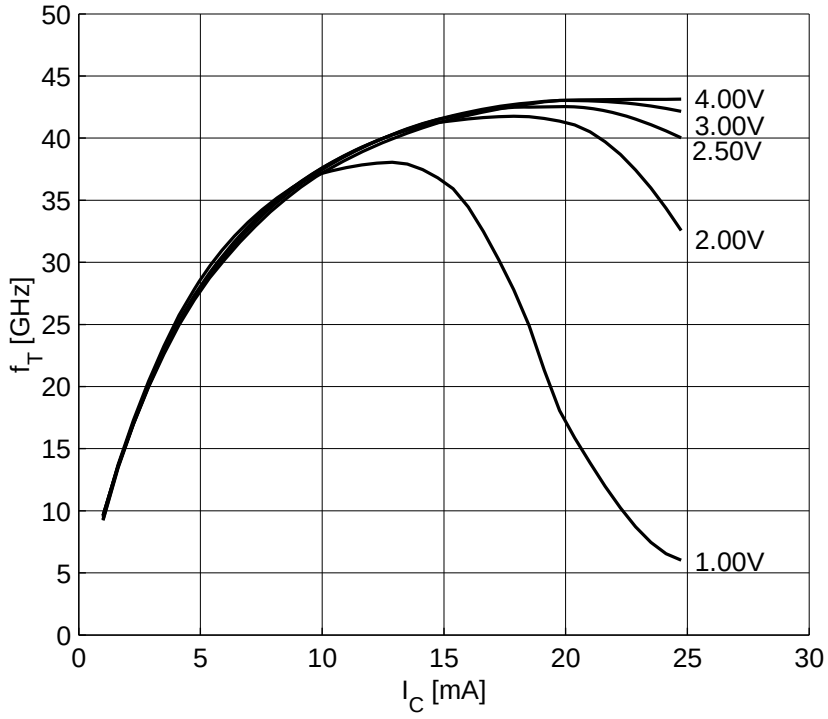


**Figure 5-7 Transition Frequency $f_T = f(I_C)$, $f$ = 1 GHz, $V_{CE}$ = Parameter in V**

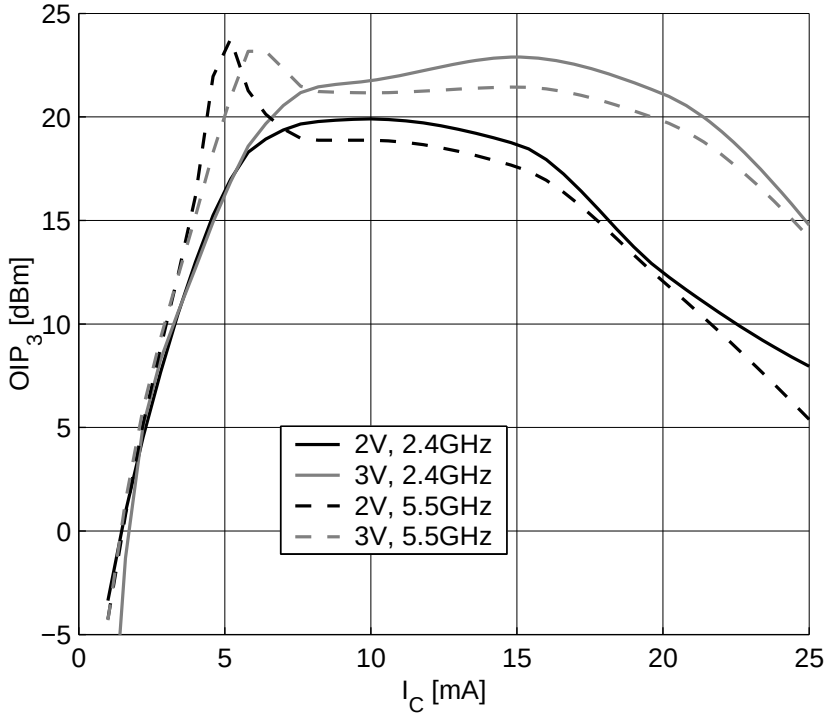


**Figure 5-8 3rd Order Intercept Point $OIP_3 = f(I_C)$, $Z_S = Z_L$= 50 Ω, $V_{CE}$, $f$ = Parameters**

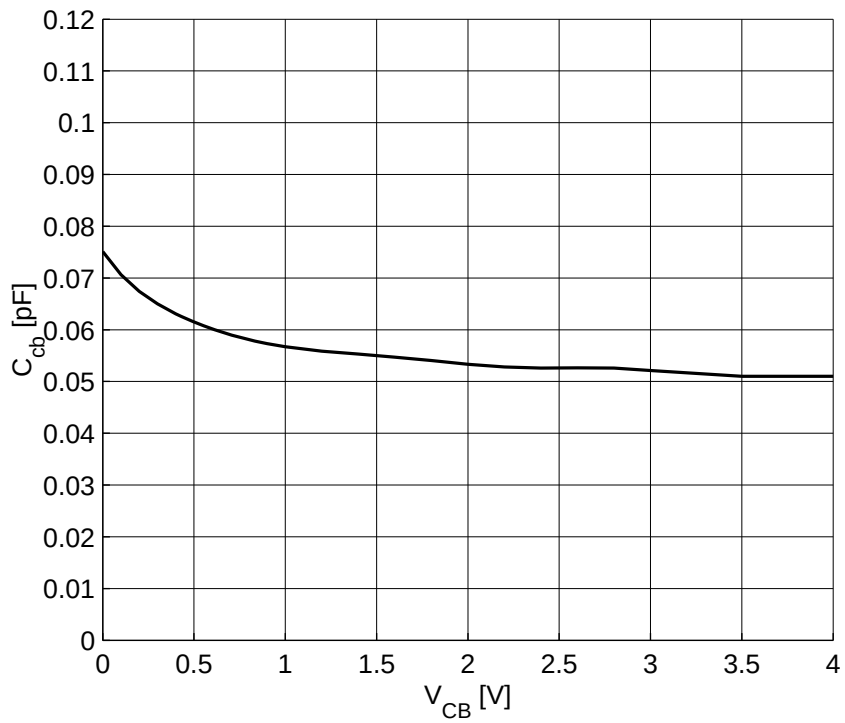


**Figure 5-9 Collector Base Capacitance $C_{CB} = f(V_{CB})$, $f$ = 1 MHz**

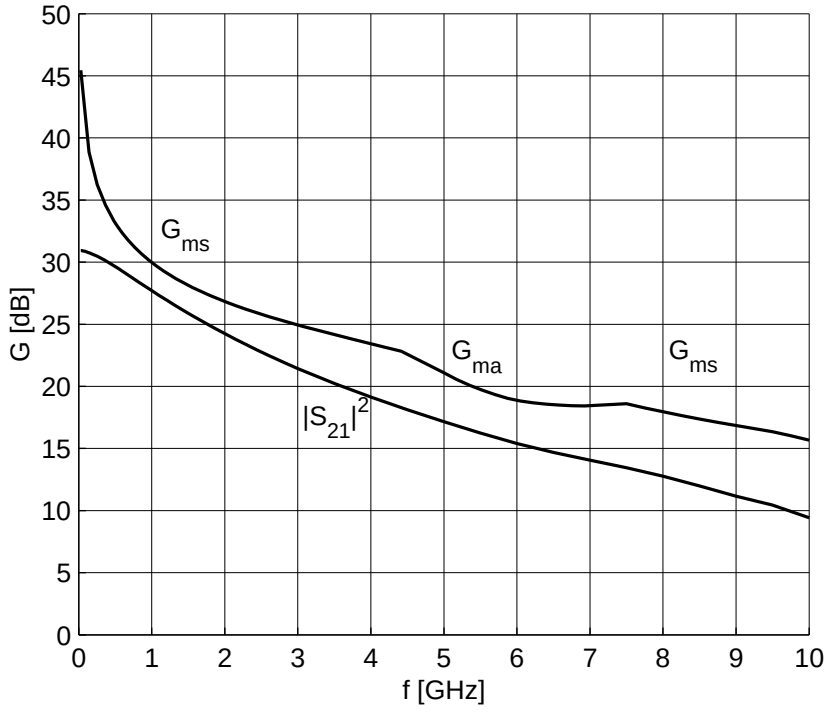


**Figure 5-10 Gain $G_{ma}$, $G_{ms}$, $|S_{21}|^2 = f(f)$, $V_{CE}$ = 3 V, $I_C$ = 15 mA**

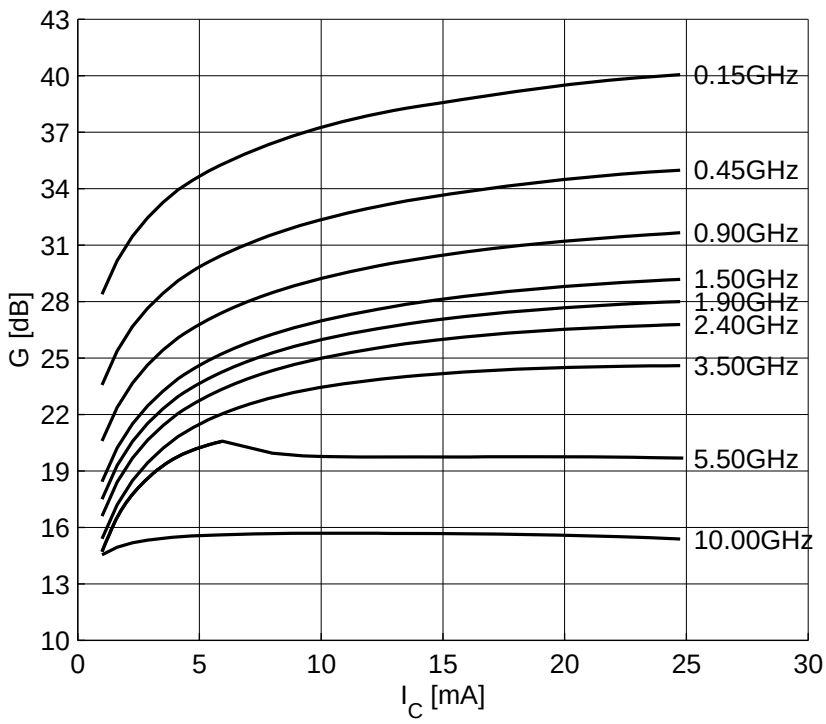


**Figure 5-11 Maximum Power Gain $G_{max} = f(I_C)$, $V_{CE}$ = 3 V, $f$ = Parameter in GHz**

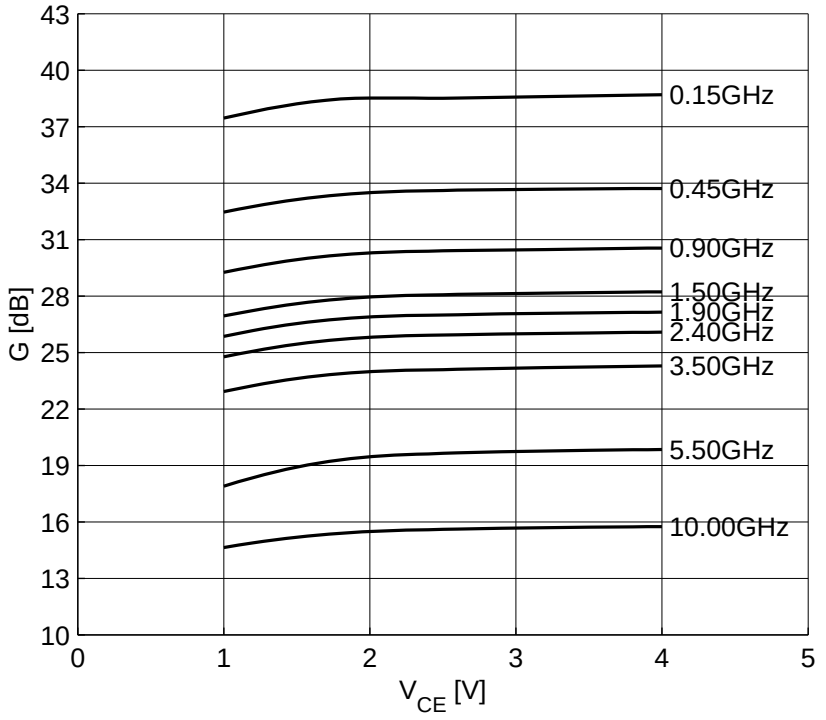


**Figure 5-12 Maximum Power Gain $G_{max} = f(V_{CE})$, $I_C$ = 15 mA, $f$ = Parameter in GHz**

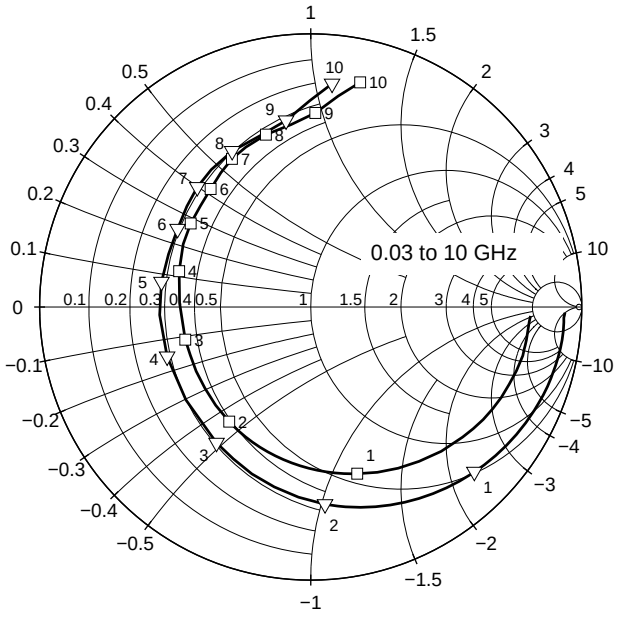


**Figure 5-13 Input Matching $S_{11}$ = *f* (*f*), $V_{CE}$ = 3 V, $I_C$ = 5 / 15 mA**

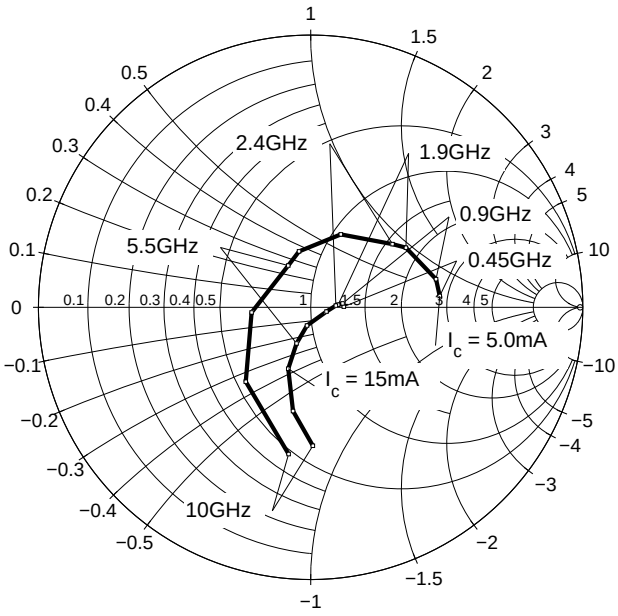


**Figure 5-14 Source Impedance for Minimum Noise Figure $Z_{opt}$ = *f* (*f*), $V_{CE}$ = 3 V, $I_C$ = 5 / 15 mA**

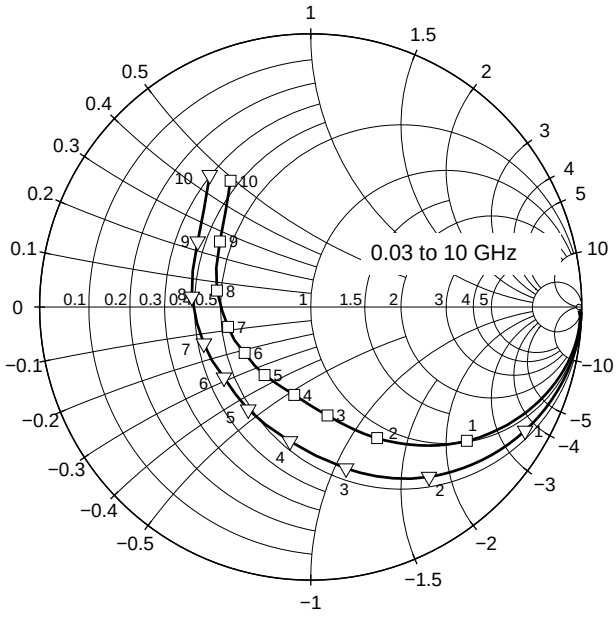


**Figure 5-15 Output Matching $S_{22}$ = f (f), $V_{CE}$ = 3 V, $I_C$ = 5 / 15 mA**

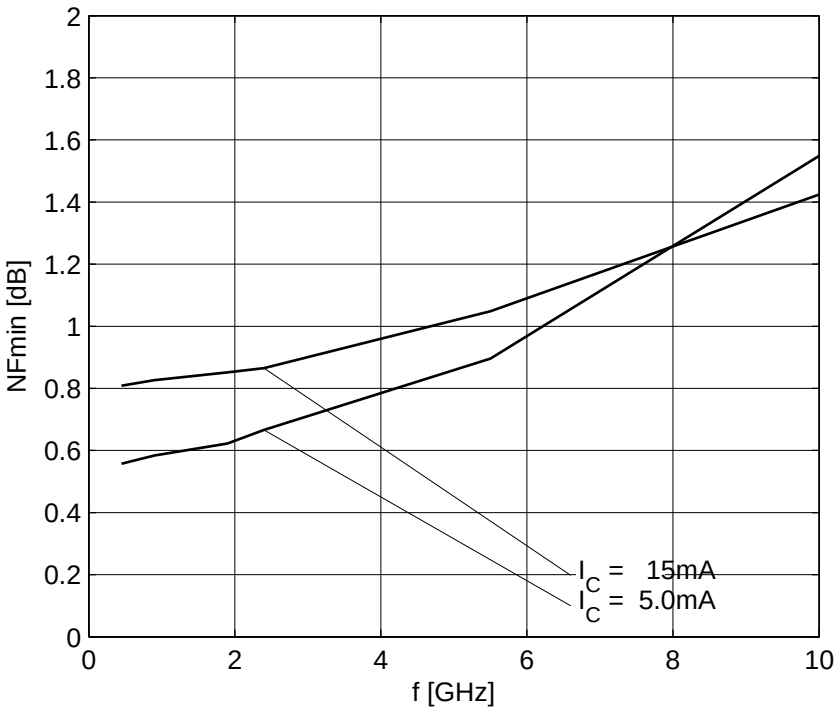


**Figure 5-16 Noise Figure $NF_{min}$ = f (f), $V_{CE}$ = 3 V, $I_C$ = 5 / 15 mA, $Z_S$ = $Z_{opt}$**

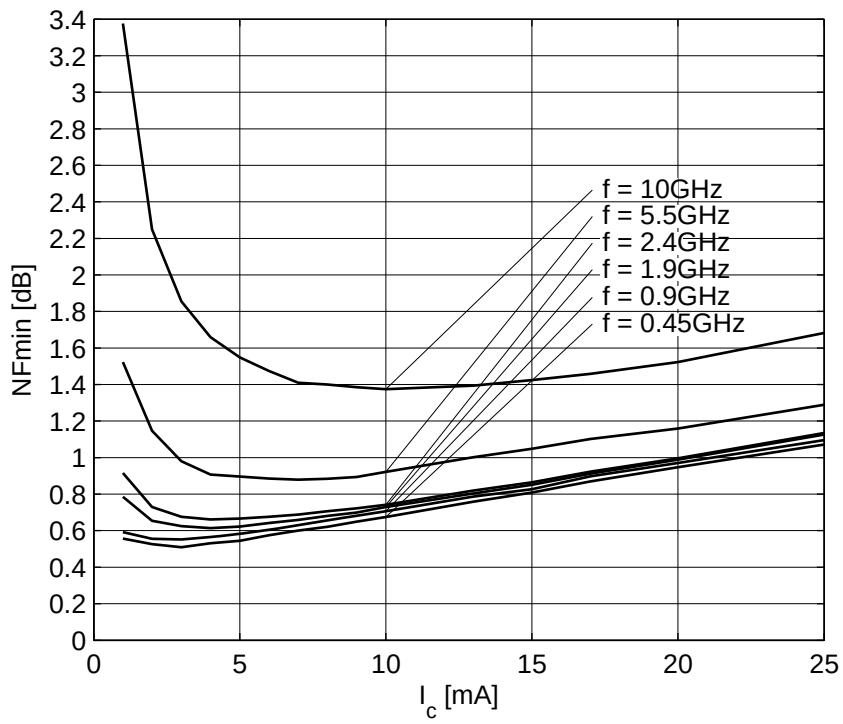


**Figure 5-17 Noise Figure $NF_{min} = f(I_C)$, $V_{CE}$ = 3 V, $Z_S = Z_{opt}$, $f$ = Parameter in GHz**

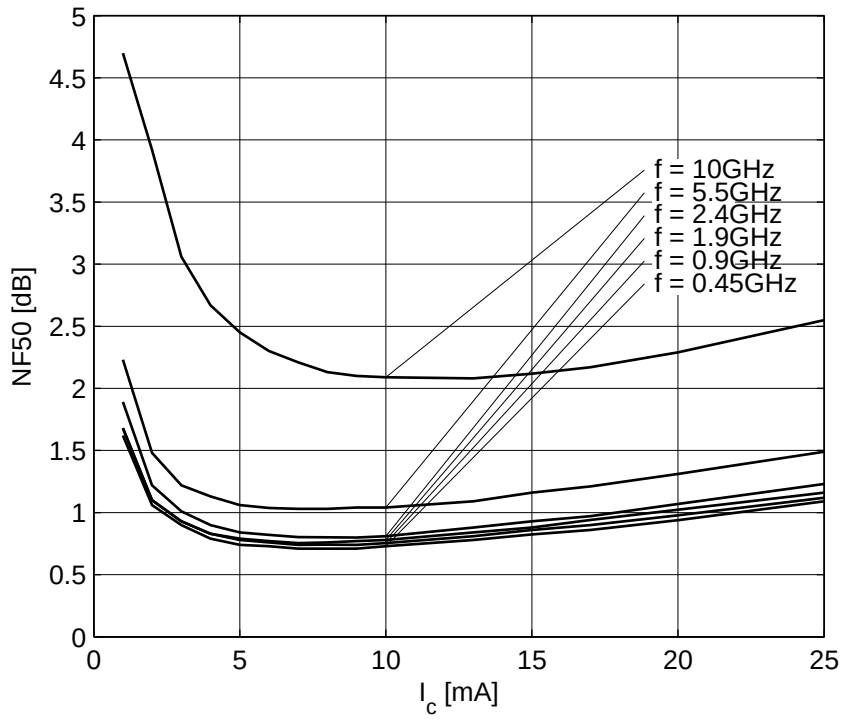


**Figure 5-18 Noise Figure $NF_{50} = f(I_C)$, $V_{CE}$ = 3 V, $Z_S$ = 50 Ω, $f$ = Parameter in GHz**

*Note: The curves shown in this chapter have been generated using typical devices but shall not be considered as a guarantee that all devices have identical characteristic curves. $T_A$ = 25 °C*

# 6 Simulation Data

For the SPICE Gummel Poon (GP) model as well as for the S-parameters (including noise parameters) please refer to our internet website: **www.infineon.com/rf.models**. Please consult our website and download the latest versions before actually starting your design.
You find the BFP720ESD SPICE GP model in the internet in MWO- and ADS-format, which you can import into these circuit simulation tools very quickly and conveniently. The model already contains the package parasitics and is ready to use for DC- and high frequency simulations. The terminals of the model circuit correspond to the pin configuration of the device.
The model parameters have been extracted and verified up to 10 GHz using typical devices. The BFP720ESD SPICE GP model reflects the typical DC- and RF-performance within the limitations which are given by the SPICE GP model itself. Besides the DC characteristics all S-parameters in magnitude and phase, as well as noise figure (including optimum source impedance, equivalent noise resistance and flicker noise) and intermodulation have been extracted.

# 7 Package Information SOT343

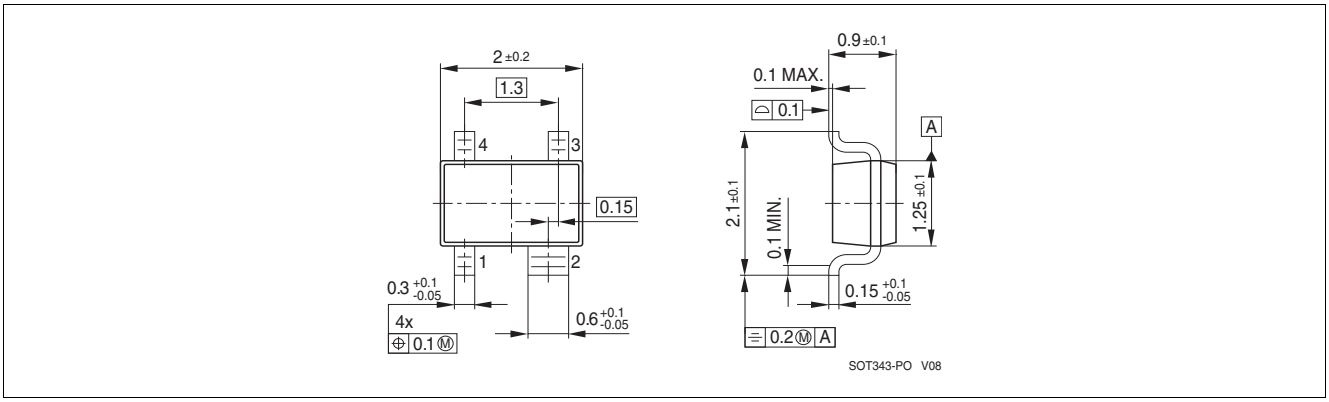


**Figure 7-1 Package Outline**

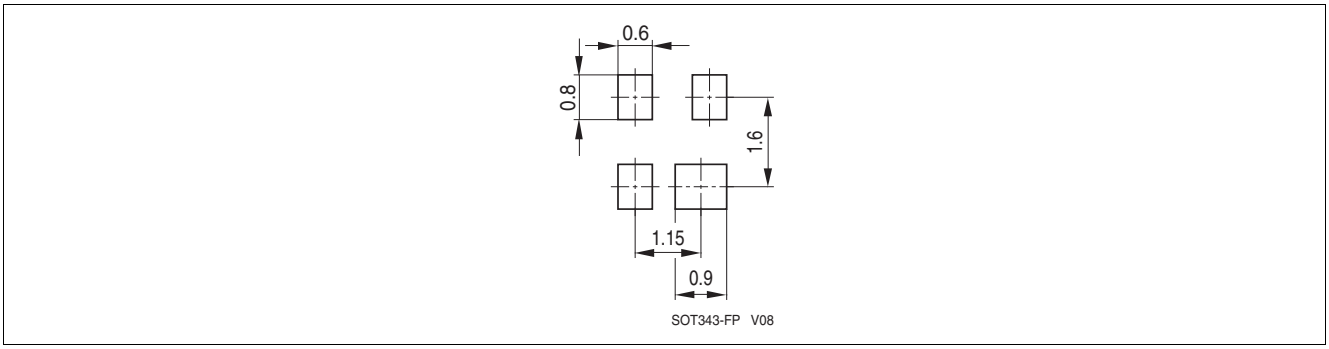


**Figure 7-2 Package Foot Print**

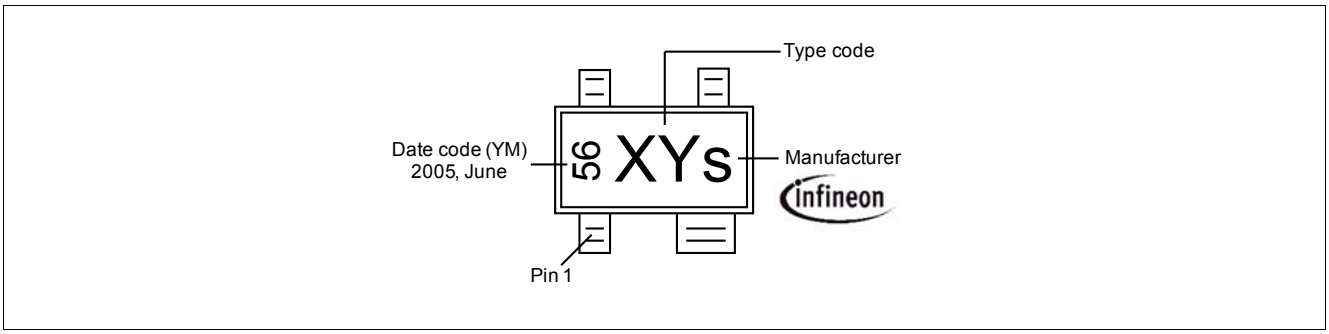


**Figure 7-3 Marking Description (Marking BFP720ESD: T3s)**

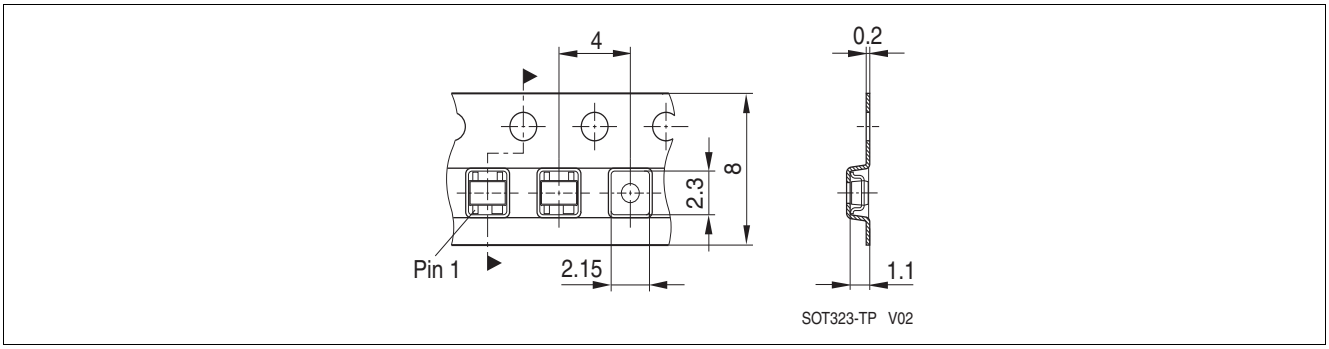


**Figure 7-4 Tape Dimensions**

w w w . i n f i n e o n . c o m

Published by Infineon Technologies AG