XENSIV™ TMR wheel speed sensor for magnetic encoder application

Features

- Valid and correct direction on first output protocol
- Enhanced digital algorithm ensures correct protocols even under mechanical vibration conditions
- Advanced stop-start capabilities including no loss of direction information
- Differential concept for robustness against external magnetic disturbance
- ISO 26262 safety element out of context for safety requirements up to ASIL D

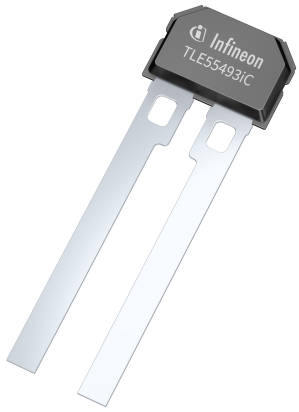

Potential applications

- Anti-lock braking system
- Indirect tire pressure monitoring system
- Hill holder and electronic parking brake
- Autonomous parking

Product validation

Product validation according to AEC-Q100, Grade 0. Qualified for automotive applications.

AEC Qualified

RoHS

ISO 26262 compliant

Description

The TLE55493iC is a wheel speed sensor featuring fast direction detection, designed for sophisticated vehicle control systems and autonomous parking applications.

The rotational speed is sensed with high accuracy for best in class jitter performance, enabling the sensor to be used as a component of indirect tire pressure monitoring systems (iTPMS). It is based on linearized TMR, providing a wide linear range and operating area. Thanks to the differential sensing principle, excellent robustness against external homogeneous magnetic field disturbances is achieved to support new requirements coming from electrification. Excellent sensitivity to magnetic field is specified over a wide temperature range to support a larger operating area. To meet harsh automotive requirements, robustness to electrostatic discharge (ESD) and electromagnetic compatibility (EMC) has been maximized without the need of additional external components.

Note

This document provides an extract of the full datasheet. A detailed version of the datasheet is available upon request through your Infineon regional representative.

Ordering information

Name	Marking	Ordering Code	Package
TLE55493iC-LR	493X6A	SP005904492	PG-SSO-2-51
TLE55493iC-PW2-50	493X6E	SP005904510	PG-SSO-2-51

Table of contents

Table of contents 2
1 Pin configuration and application circuit 3
2 Operating range 4
3 Parametric characteristics 5
4 Functional description 8
4.1 Undervoltage and power-on 8
4.2 Output protocol (PW2) 9
4.3 Output protocol (AK) 9
4.3.1 AK bits definition 9
4.3.1.1 AK-LR 9
4.3.1.2 LM bits encoding 10
4.3.2 Bit stump suppression 11
5 ESD and EMC characteristics 12
6 Package 13
7 Revision history 16
Disclaimer 17

1 Pin configuration and application circuit

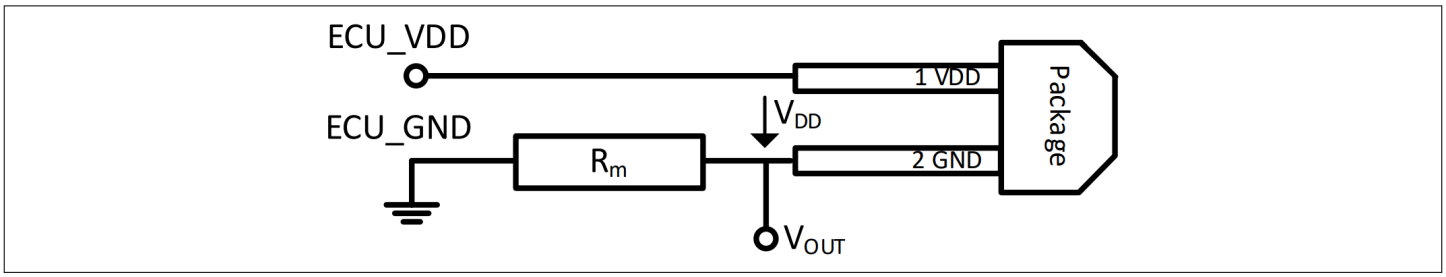

Figure 1 **Application circuit example - load resistor (R_m) on GND pin**

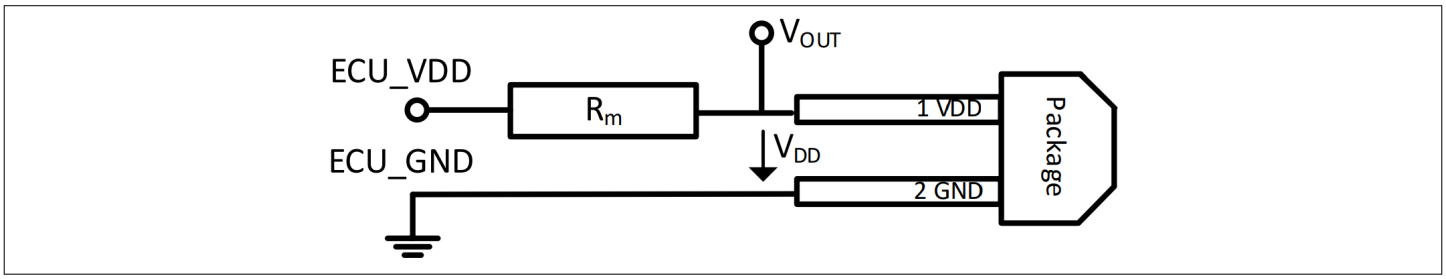

Figure 2 **Application circuit example - load resistor (R_m) on V_{DD} pin**

Pin No.	Symbol	Function
1	V_{DD}	Supply voltage
2	GND	Ground

2 Operating range

All parameters specified as parametric characteristics (see Table 2) refer to the below-listed operating conditions unless otherwise stated. The operating range does not specify technical requirements, but rather defines the boundary conditions of the requirements and their verification.

Table 1 Operating range

Parameter	Symbol	Values			Unit	Note or condition
		Min.	Typ.	Max.		
Electrical						
Supply voltage	V_{DD}	3.5+V_{HYST}	-	20	V	at sensor pins, V_{HYST}=V_{DD_HYST}
Load resistor	R_m	3	-	50	Ω	-
Application temperature mission profile						
Junction temperature	T_J	-40	-	110	°C	either 12500 h
		-40	-	170	°C	or 500 h
		-10	-	60	°C	additional 30000 h (battery charging time)
Magnetical						
Magnetic signal frequency range	f_{MAG}	0	-	3000	Hz	Footnote [1)]
Magnetic input signal at each sensing element	B_N	-29.1	-	29.1	mT	T_J = 25°C, $B_N = \sqrt{(B_X^2+B_Y^2)}$
Differential input signal range in speed path	dB_{SP}	-60	-	60	mT	T_J = 25°C
Differential input signal range in direction path	dB_{DR}	-20.0	-	20.0	mT	T_J = 25°C
Limit threshold speed	dB_{LIMIT}	135	180	225	µT	T_J = 25°C, Footnote [2)] [3)]
Static homogeneous external disturbance field	B_{EXT_DC}	-5	-	5	mT	static field, same field at all sensing elements, Footnote [4)]

1) Startup switching behavior to be considered especially at high speed.
2) Amplitude value, differential field.
3) No missing protocol while differential magnetic input is above max. dB_{LIMIT} . No protocol delivered while differential magnetic input is below min. dB_{LIMIT}. Verified with constant amplitude, constant offset and constant operating condition and at f_{MAG}≥1Hz.
4) Criterion: no additional/ missing protocols. Parametric characteristics valid only at typical value.

3 Parametric characteristics

The product characteristics are valid over the operating range. All values are specified for a sinusoidal signal with constant amplitude and offset, at constant operating conditions (i.e. wheel rotation direction, supply voltage, junction temperature). Typical values correspond to V_{DD} = 12 V and T_A = 25°C. Not all product characteristics are subject to production test, some are verified by design/characterization.

Table 2 Parametric characteristics

Parameter	Symbol	Values			Unit	Note or condition
		Min.	Typ.	Max.		
Period jitter on speed zero-crossing protocols						
Period jitter on speed zero-crossing protocols	S_{JIT_ZC}	-	-	0.15	%	$dB_{SP} > 2 \cdot dB_{LIMIT}$, ±1σ
Duty cycle of speed zero-crossing protocols						
Duty cycle of speed zero-crossing protocols	DC_{ZC}	45.0	-	55.0	%	$dB_{SP} > 2 \cdot dB_{LIMIT}$, calibrated mode
Duty cycle variation on consecutive zero-crossing protocols	DC_{VAR_ZC}	-	1	1.5	%	$dB_{SP} > 2 \cdot dB_{LIMIT}$, calibrated mode, Footnote [1)]
Power-on and startup behavior						
Protocols required to have valid direction	n_{DIR}	-	-	0	-	Footnote [2) 3)]
Electrical						
Output current slew rate	SR_R SR_F	11	-	28	mA/µs	$SR_R = (I_{10\%} - I_{90\%}) / t_R$, $SR_F = (I_{90\%} - I_{10\%}) / t_F$, Footnote [4)]
Failure indication current	I_{ERR}	0	2.2	3	mA	Footnote [5)]
Output current during static output low state	I_{LOW}	6.2	7	7.8	mA	-
Output current during static output mid state	I_{MID}	12.6	14	15.4	mA	-
Output current during static output high state	I_{HIGH}	25.4	28	30.6	mA	-
Supply current ratio	I_{MID} / I_{LOW}	1.9	-	2.2	-	same temperature and same R_M for both current levels
	I_{HIGH} / I_{LOW}	3.8	-	4.5	-	same temperature and same R_M for both current levels
Line regulation	G_L	-	-	90	µA/V	dI/dV_{DD}, quasi static
Reset level	V_{DD_RESET}	-	-	3.5	V	-
Supply Hysteresis	V_{DD_HYST}	1.5	-	1.7	V	AK protocol
		0.65	-	0.75	V	PW2 protocol
Thermal						
Thermal resistance	R_{th}	-	120	190	K/W	junction-to-ambient, PG-SSO-2 package

1) Variation between consecutive duty cycle values. Absolute value.
2) 1st protocol delivers valid and correct direction information.
3) 2nd protocol delivers valid and correct direction information in case of a temperature watchdog event triggered by sensor self-heating (change of T_J).
4) Valid for any current level transition, for any resistor value in the valid range and no external capacitor.
5) I_{ERR} is a low current level implemented to signalize failures which might severely impact the sensor's functionality. For more details, please refer to the product-specific safety manual.

Table 3 Output protocol (PW2)

Parameter	Symbol	Values			Unit	Note or condition
		Min.	Typ.	Max.		
Pre-low length	$t_{PRE\text{-}LOW}$	38	45	52	µs	-
Length of warning pulse	t_{WARN}	38	45	52	µs	-
Threshold for warning pulse (Speed)	$dB_{WARN,SP}$	-	$2 \cdot dB_{LIMIT}$	-	µT	amplitude value, differential field
Length of DR-L protocol	$t_{DR\text{-}L}$	76	90	104	µs	wheel rotation from V_{DD} to GND
Cutoff frequency (DR-L)	$f_{CUT,DR\text{-}L}$	2700	-	-	Hz	calibrated mode
Length of DR-R protocol	$t_{DR\text{-}R}$	153	180	207	µs	wheel rotation from GND to V_{DD}
Cutoff frequency (DR-R)	$f_{CUT,DR\text{-}R}$	1700	-	-	Hz	calibrated mode
Length of DR-L & EL pulse	$t_{DR\text{-}L,EL}$	306	360	414	µs	wheel rotation from V_{DD} to GND $f_{MAG} \le f_{EL}$ AND $dB_{SP} \le dB_{EL}$
Length of DR-R & EL pulse	$t_{DR\text{-}R,EL}$	616	720	828	µs	wheel rotation from GND to V_{DD} $f_{MAG} \le f_{EL}$ AND $dB_{SP} \le dB_{EL}$
Output of EL pulse, activation frequency	$f_{EL\ act}$	91	107	113	Hz	on coil, Footnote 1)
Output of EL pulse, deactivation frequency	f_{EL_deact}	95	117	138	Hz	on coil, Footnote 1)
Threshold for EL pulse	dB_{EL}	-	$4 \cdot dB_{LIMIT}$	-	µT	amplitude value, differential field
Length of standstill protocol	t_{STILL}	1.232	1.4	1.656	ms	-
Standstill period	t_{STILL_PD}	590	737	848	ms	-
Delay between magnetic event and output protocol	t_{DELAY}	-	-	100	µs	Footnote 2)

1) Frequency hysteresis implemented: EL protocols are activated below 107Hz and deactivated above 117Hz (for a typical device with a hysteresis of 10Hz).
2) t_{DELAY} = time between digital switching event (zero crossing or angle threshold) and rising edge of protocol.

Table 4 Output protocol (AK)

Parameter	Symbol	Values			Unit	Note or condition
		Min.	Typ.	Max.		
AK bit time	t_P	40	43	46	µs	compliant with VDA 4.0 (AK protocol)

(table continues...)

Table 4 (continued) Output protocol (AK)

Parameter	Symbol	Values			Unit	Note or condition
		Min.	Typ.	Max.		
Standstill period						
Standstill period	t_{STOP}	127.5	150	172.5	ms	-
Delay between magnetic event and output protocol	t_{DELAY}	58	65	72	µs	Footnote [1)]

1) Time between digital switching event (zero crossing or angle threshold) and rising edge of the first AK protocol pulse (t_P for bit stump + t_P / 2 for initial I_{LOW} state).

4 Functional description

The sensor features a magnetic sensing interface, which senses the magnetic field change generated by the movement of a magnetized encoder wheel, and detects its rotational direction. The sensing principle is based on linearized TMR, sensitive to the magnetic field in x-direction. In the following figure the typical placement of the TLE55493iC facing a magnetic encoder wheel is shown.

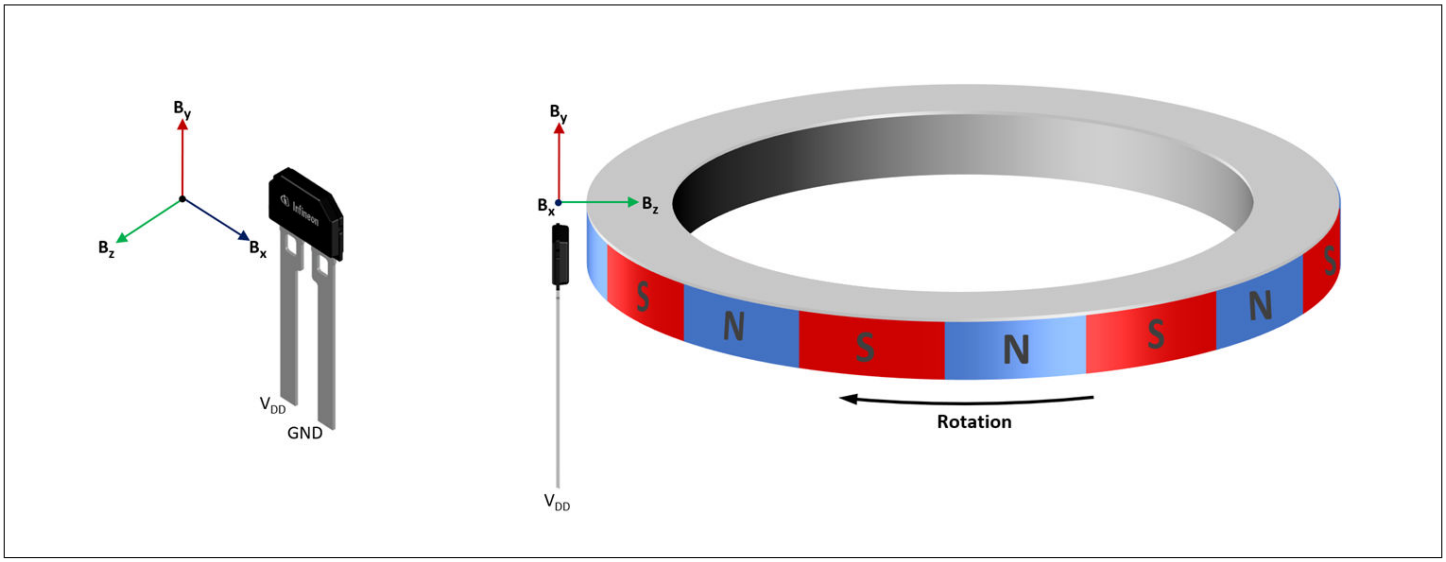

Figure 3 **TLE55493iC coordinate system and typical mounting position in magnetic encoder applications**

Note: Y = 0 mm refers to the By = 0 mT line of the magnetized stripe.

4.1 Undervoltage and power-on

The sensor implements an undervoltage comparator capable to trigger a reset signal when the supply voltage (i.e. V_{DD}) drops below the defined reset threshold V_{DD_RESET}.

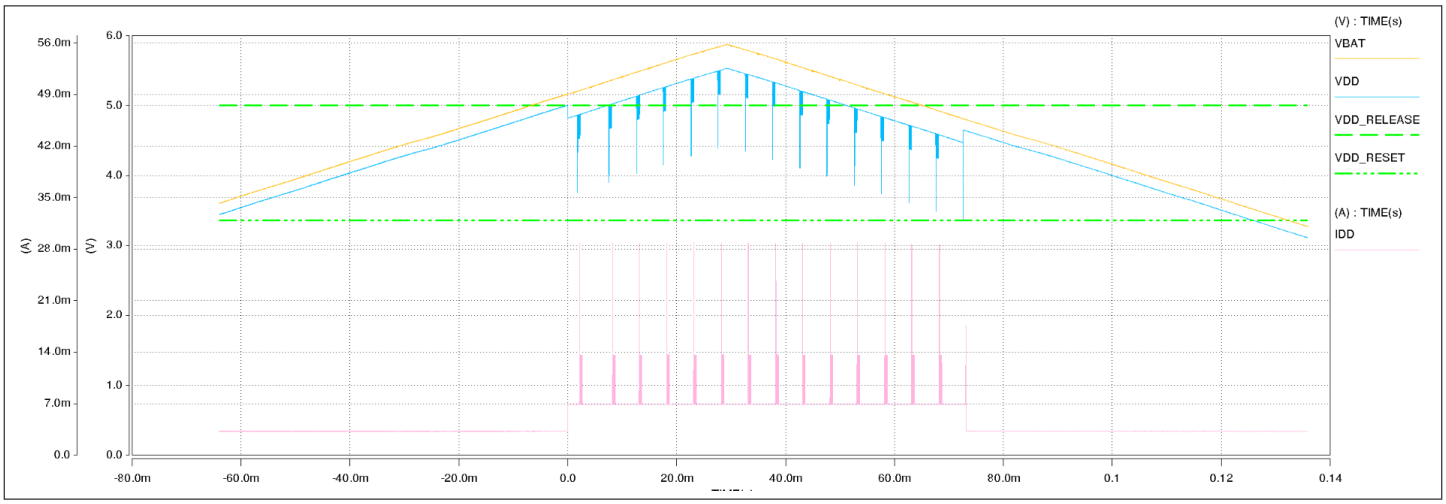

Figure 4 **Undervoltage behavior**

If V_{DD} drops below V_{DD_RESET}, then the sensor goes into reset state and reduces its current consumption down to I_{ERR}.

If V_{DD} rises above $V_{DD\ (MIN)}$ level, then the sensor resumes the defined behavior within its power-on time.

$V_{DD_RELEASE} = V_{DD_RESET} + V_{DD_HYST}$

During the startup phase the current reaches the value of I_{ERR} before V_{DD} achieves $V_{DD_RELEASE}$.

The initial current level for uncalibrated mode (I_{LOW}) is reached within the sensor power-on time and it fulfills the specified current limits as long as V_{DD} is above $V_{DD_RELEASE}$.

4.2 Output protocol (PW2)

Each switching event triggers an output pulse indicated by a transition of the current from I_{LOW} to I_{MID}.

Between each magnetic event and the rising edge of the corresponding output pulse, the output current stays at I_{LOW} for $t_{PRE\text{-}LOW}$ time.

If there is a new magnetic switching event while a pulse is being sent already, the pulse that is being sent is cut and the new pulse is issued after $t_{PRE\text{-}LOW}$ time. In such a condition, the protocol length of the cut protocol can be shorter than the corresponding specified minimal value.

The sensor sends out warning protocols in correspondence of switching events when the following occurs:

In UNCAL mode, if:

- watchdog is activated (1 warning protocol is delivered before sensor reset)

In CAL mode, if:

- watchdog is activated (1 warning protocol is delivered before sensor reset); or
- magnetic differential input field is below $dB_{WARN,SP}$ or $dB_{WARN,DR}$ or
- direction information is not valid.

The warning pulse output has priority over the direction and the assembly position (EL) information.

In case of a standstill situation only t_{STILL} protocols are delivered. Speed protocols might be delivered on slow movement or vibrations.

If there is no switching event for a time longer than the standstill period t_{STILL_PD}, the standstill pulse is transmitted.

4.3 Output protocol (AK)

The AK output protocol is compliant to the document: "*Requirement Specifications for Standardized Interface for Wheel Speed Sensors with Additional Information “AK-Protokoll”* " Version: 4.0 13.02.2008 of Daimler AG, unless otherwise stated.

4.3.1 AK bits definition

4.3.1.1 AK-LR

Bits 0 - 8 are designated as data protocol and their purpose is to transfer additional information to the ECU. Bit #0 is used as an indication of air gap reserve (LR). Bit #1 (M), bit #3 (GDR), bit #4 (DR) and bit #8 (P) encode information regarding sensor calibration, validity of direction, direction of rotation and parity, respectively. Bit #2 is not used, while bits #5, #6, #7 (LM0, LM1, LM2) encode information regarding the amplitude of the magnetic field. Zero-crossing protocols provide a first current pulse at I_{HIGH} level, while standstill protocols provide a first current pulse at I_{MID} level.

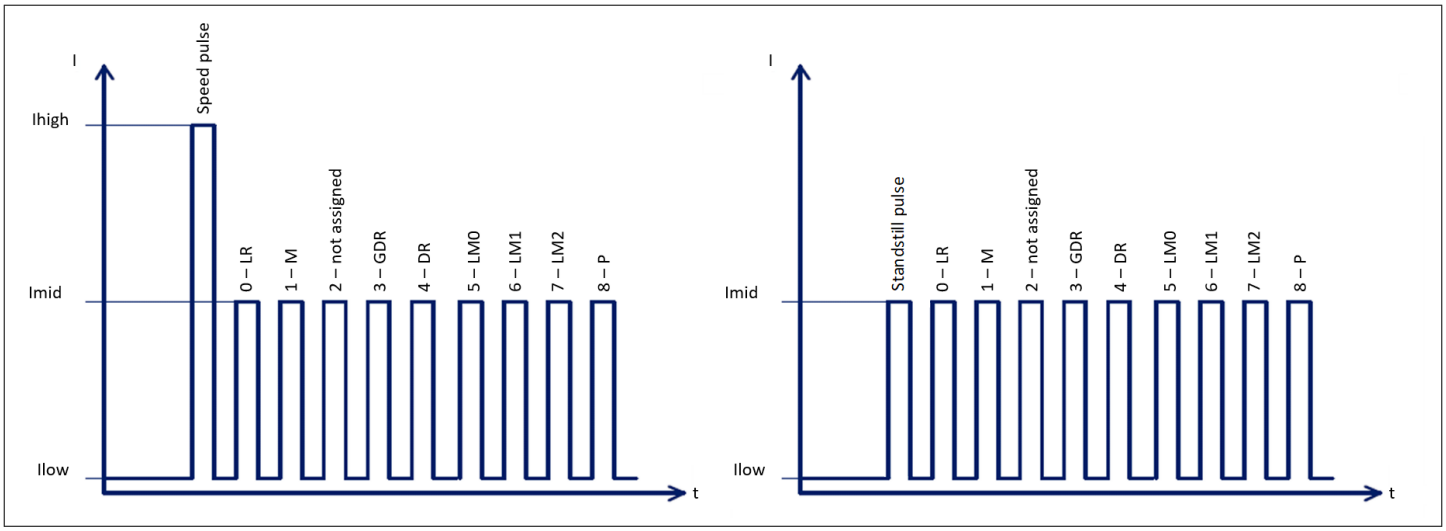

Figure 5 AK-LR bits encoding

The AK bits are encoded according to the following table

Table 5 Bits Definition (AK-LR)

Bit	Content	Abbrv.	Value after power-on	Coding	Comments
0	Airgap reserve	LR	'0'	'1' if airgap reserve is reached	if $dB_{LIMIT}<dB_{SP}<2\cdot dB_{LIMIT}$ or $dB_{LIMIT,DR}<dB_{DR}<2\cdot dB_{LIMIT,DR}$
1	Modus bit	M	'1'	'1' in uncalibrated mode, '0' in calibrated mode	if M='0', then LM info is valid
2	-	-	-	-	-
3	Direction validity	GDR	'1'	'1' if direction of rotation is valid	-
4	Direction	DR	acc. wheel movement	'0' if direction of rotation is positive	-
5	LM bits	LM0	'0'	See LM bits encoding	LM might also be updated while M='1'
6		LM1	'0'		
7		LM2	'0'		
8	Parity	P	Parity	'1' if parity including parity bit is even	-

4.3.1.2 LM bits encoding

The measured speed signal amplitude value is transmitted in the AK protocol using the LM bits. There is no hysteresis implemented for the calculation of the LM bits values. After power on the default value for LM is '000'. The speed signal amplitude is measured both in uncalibrated and calibrated mode. Nevertheless, LM values are valid only in calibrated mode, which is flagged by the M bit.

The relation between differential magnetic field and LM bits value is given in the following table.

Table 6 LM bits encoding

LM decimal	LM binary	Level in relation to dB_{LIMIT}
0	000	≤ 2
1	001	> 2
2	010	> 4
3	011	> 8
4	100	> 16
5	101	> 32
6	110	> 64
7	111	> 96

4.3.2 Bit stump suppression

The suppression of bit stumps in the Wheel Speed Sensor is required, so that the combination of sensors and ECUs from different manufacturers is as robust as possible. In this case, the sensor output is always completely shifted by a constant bit time when a new protocol start occurs. This is equivalent to a time output offset. The suppression of bit stumps is active in all speed ranges and in all operating states of the sensor.

5 ESD and EMC characteristics

EMC verification is performed based on standardized test methods under nominal environmental and operational conditions within typical application circuits, which are in detail documented within the test report. The procedure is consistent with Generic IC EMC Test Specification (BISS v2.1) and according ISO 26262 Part 5, Clause 10. EMC test pass/fail criteria are derived from product specifications, application requirements and top-level safety requirements. A defined relevant subset of the functional behavior and parameters of an IC is monitored during EMC tests. Observed deviations from the intended IC behavior are part of the test documentation. EMC requirements are not subject to production test and are verified by design and/or characterization based on typical samples from a typical lot. The characterization results will be assessed by technical experts and shared with the customer as a reference. Given the dependency of EMC performance on the integration on system level, it is the system integrators responsibility to ensure performance on system level.

Table 7 ESD characteristics

Parameter	Symbol	Values			Unit	Note or condition
		Min.	Typ.	Max.		
ESD HBM Voltage	V_{HBM}	-12	-	12	kV	Method AEC-Q100 -002 C=100pF, R=1500Ω

6 Package

The product is RoHS compliant (restriction of hazardous substances directive).

By following the application note "Recommendation for handling and assembly of Infineon PG-SSO Sensor Packages", the sensor terminals can be bent without causing incipient cracks influencing the sensor element function.

Please refer to your key account team or regional sales if you need further information.

Table 8 Package parameters

Parameter	Material
Lead Frame	CuCrSiTi (K75 UNS:C18070)
Lead Plating	Sn

The product is delivered in blister packing.

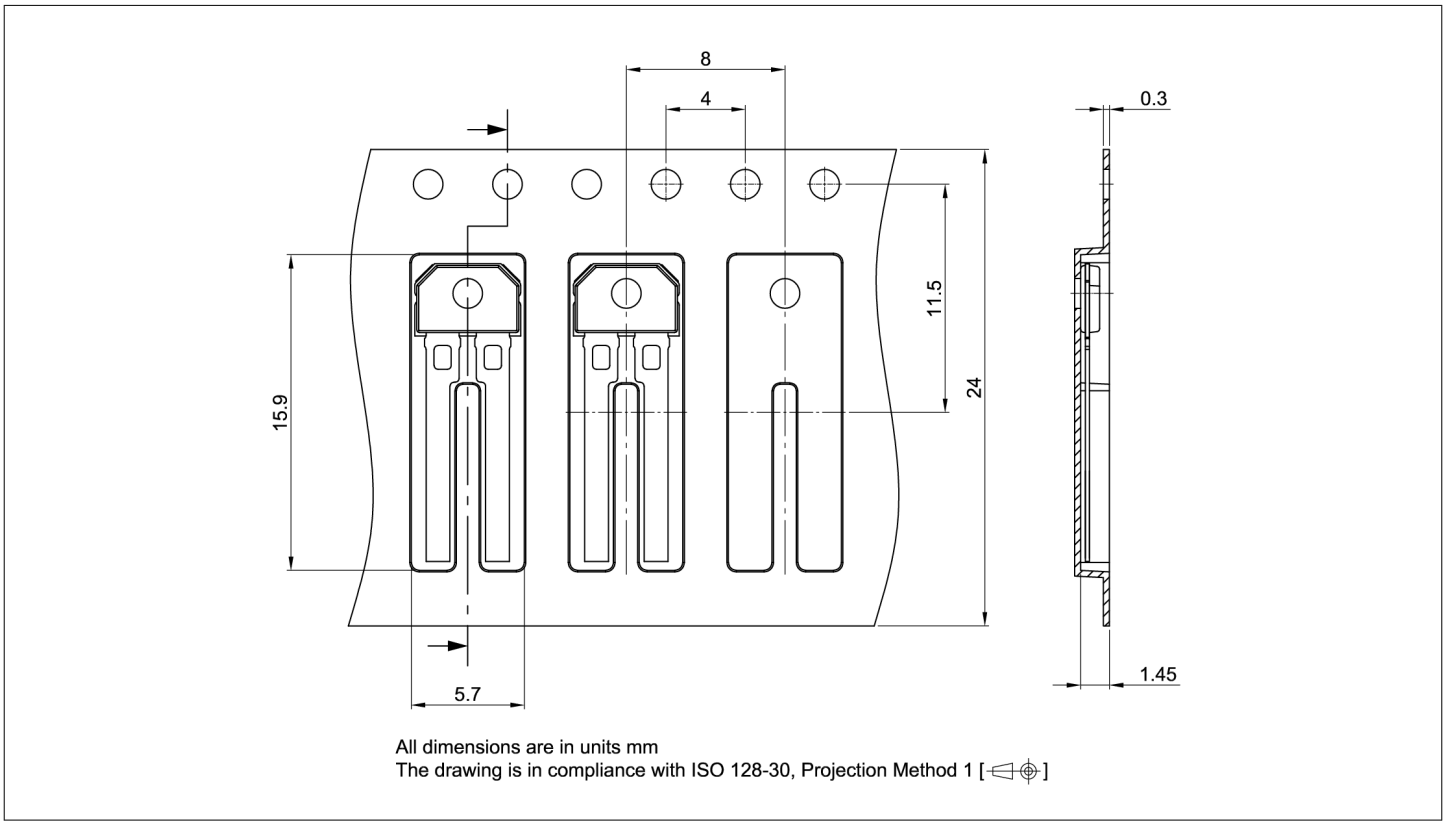

Figure 6 Packing dimensions of PG-SSO-2-51 in blister packing

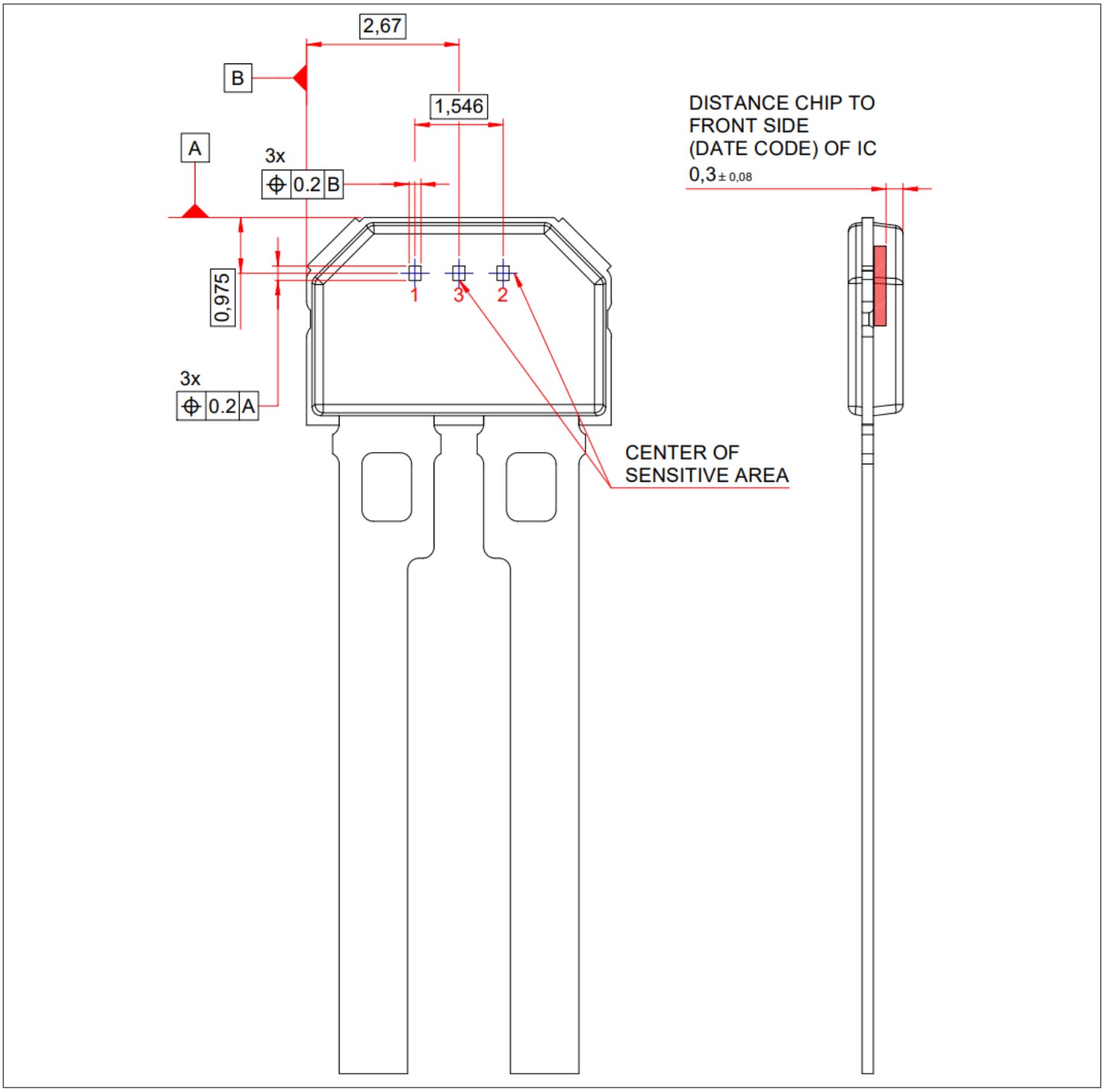

Figure 7 **PG-SSO-2-51 package outline - sensing elements position details**

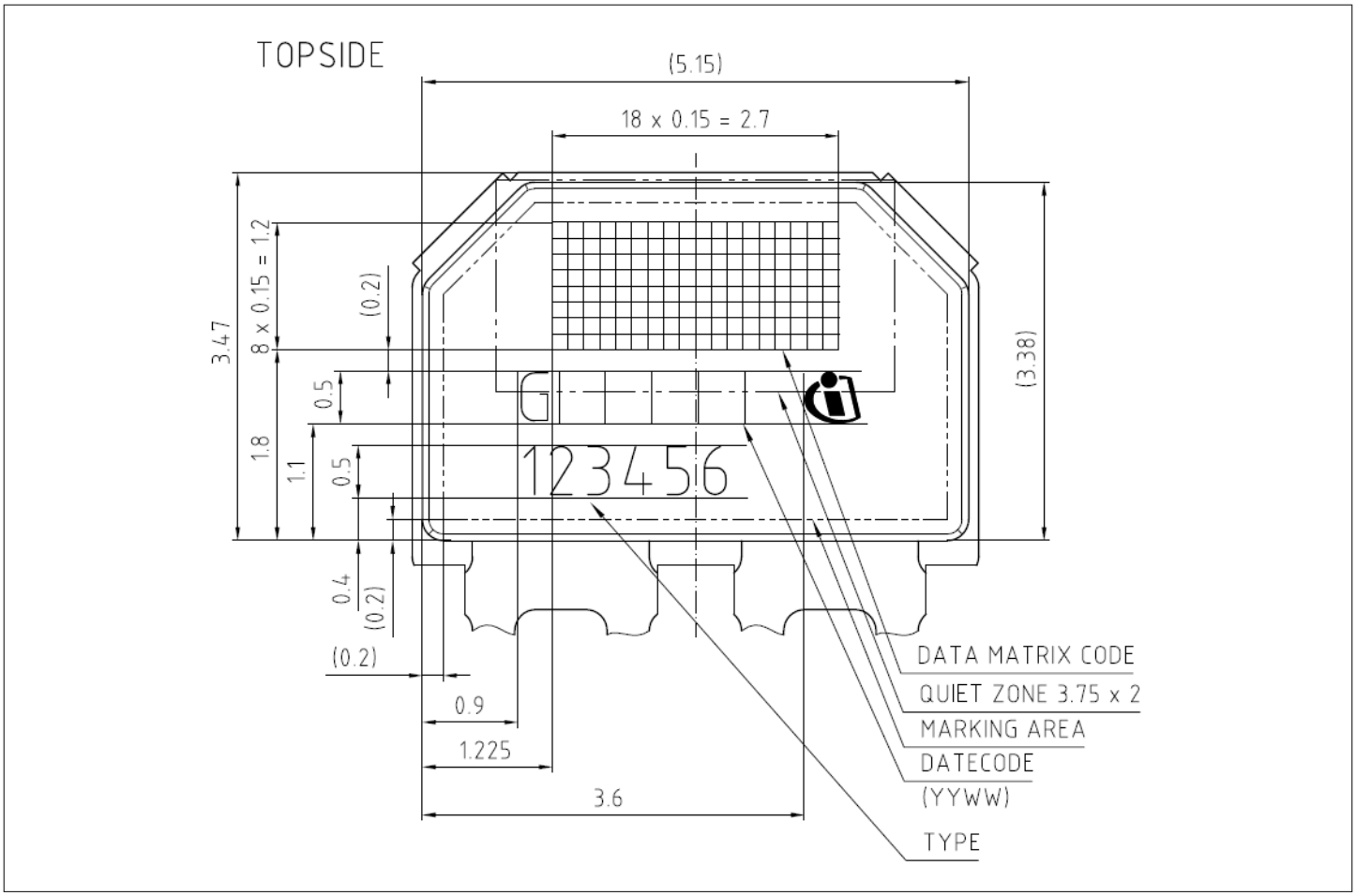

Figure 8 **PG-SSO-2-51 marking**

7 Revision history

Date	Version	Change Description
2025-05-09	1.00	Initial release
2026-01-12	1.01	Classification set to "public"; Editorial changes

Trademarks

All referenced product or service names and trademarks are the property of their respective owners.

Edition 2026-01-12

Published by

Infineon Technologies AG

81726 Munich, Germany

© 2026 Infineon Technologies AG

All Rights Reserved.

Do you have a question about any aspect of this document?

Email: erratum@infineon.com

Document reference
IFX-Z8F80792246
jobid__20260112153149596_LastLeaf2

Important notice

The information given in this document shall in no event be regarded as a guarantee of conditions or characteristics ("Beschaffenheitsgarantie").

With respect to any examples, hints or any typical values stated herein and/or any information regarding the application of the product, Infineon Technologies hereby disclaims any and all warranties and liabilities of any kind, including without limitation warranties of non-infringement of intellectual property rights of any third party.

In addition, any information given in this document is subject to customer's compliance with its obligations stated in this document and any applicable legal requirements, norms and standards concerning customer's products and any use of the product of Infineon Technologies in customer's applications.

The data contained in this document is exclusively intended for technically trained staff. It is the responsibility of customer's technical departments to evaluate the suitability of the product for the intended application and the completeness of the product information given in this document with respect to such application.

Warnings

Due to technical requirements products may contain dangerous substances. For information on the types in question please contact your nearest Infineon Technologies office.

Except as otherwise explicitly approved by Infineon Technologies in a written document signed by authorized representatives of Infineon Technologies, Infineon Technologies' products may not be used in any applications where a failure of the product or any consequences of the use thereof can reasonably be expected to result in personal injury.