XENSIV™ high accuracy coreless current sensor for external current rail applications

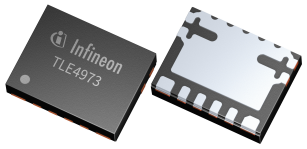

RoHS

AEC Qualified

ISO 26262 compliant

Features

- Highly accurate, scalable, DC & AC current sensing
- Full scale up to ±20.8 mT in default sensitivity range, programmable up to ±41.6 mT
- 5 V supply voltage
- Ratiometric single-ended analog output
- ISO 26262 Safety Element out of Context for safety requirements up to ASIL B
- Small form factor enables high power density
- Improved offset error over temperature and lifetime in default sensitivity range
- Very low sensitivity error over temperature and lifetime
- Differential sensor principle ensures superior magnetic stray field suppression
- High bandwidth provides fast response time and low phase delay
- Over-Current Detection with configurable threshold (max detection time < 1.0 µs)
- EEPROM with integrated charge-pump for in-system programming and end-of-line calibration without additional circuitry
- Different package solutions for optimal system integration in different wiring schemes
- Digital control and diagnostic interface. It provides: temperature readout, safety status readout, read/write programming access to internal EEPROM, control of diagnosis mode
- Pre-calibrated over temperature with possibility of in-system end-of-line calibration to compensate system-level errors

Potential applications

- Main and auxiliary electrical drives
- Over-load and over-current detection
- Battery main switch
- Smart circuit breakers
- PV inverters
- Current monitoring and power supplies

Product validation

Qualified for automotive applications. Product validation according to AEC-Q100, Grade 0.

Description

TLE4973 is a high precision miniature coreless magnetic current sensor for AC and DC measurements with analog interface and fast over-current detection output. Negative effects (saturation, hysteresis) known from open loop sensors using flux concentration techniques are avoided. The differential measurement principle allows great stray field suppression for operation in harsh environments. The high configurability enables customization for a variety of applications. User-programmable parameters such as OCD thresholds and sensitivity settings are stored in an embedded EEPROM. Device configuration can be performed in-situ through a one-wire UART based interface called Digital Control Diagnostic Interface (DCDI). The DCDI interface provides read/write access to internal registers of the device and allows to trigger the diagnostic mode and to read temperature, OCD and safety status. It has an auto-addressing functionality and can handle up to 8 slaves on one bus.

Product type	Package	Marking	Ordering code
TLE4973-RE35S5-S3510	PG-VSON-6	H73EDS50	SP006133056

Table of contents

Product validation . . . 1
Table of contents . . . 2
1 Standard configuration . . . 3
2 Functional block diagram . . . 4
3 Pin configuration . . . 5
4 General product characteristics . . . 6
4.1 Absolute maximum ratings . . . 6
4.2 Functional range . . . 7
5 Product features . . . 8
5.1 Electrical characteristics . . . 8
5.2 Sensing characteristics . . . 9
5.2.1 Full scale definition . . . 12
5.3 Functional Description . . . 13
5.3.1 Output voltage and current polarity . . . 13
5.3.2 Output behavior . . . 13
5.3.2.1 Single-ended AOUT only output mode . . . 13
5.3.3 Output noise density . . . 14
5.3.4 Safety and diagnostic . . . 14
5.3.4.1 OCD - Over Current Detection . . . 14
5.3.4.1.1 OCD pins external connection . . . 14
5.3.4.1.2 OCD thresholds . . . 14
5.3.4.1.3 OCD output timing behavior . . . 15
5.3.4.2 Undervoltage / Overvoltage detection . . . 17
5.3.4.3 DCDI - Digital Control Diagnostic Interface . . . 18
5.3.4.3.1 DCDI slave addressing . . . 18
5.3.4.3.2 DCDI features . . . 18
5.3.4.4 Diagnostic mode . . . 19
6 Application Information . . . 20
6.1 Application circuit example for single-ended AOUT only output mode . . . 20
7 Package . . . 21
8 Revision History . . . 22
Disclaimer . . . 23

1 Standard configuration

Table 1 TLE4973 standard configuration

Name	RATIO	FS [mT] 1)	FS_{5V} [mT] 1)	Sx [mV/mT] 1)	B_{THR} [mT] 1)	OCD_{GL_MUL} 1)	V_{OQ} [V]	OP_{MODE}
TLE4973-RE35S5-S3510	on	±17.01	±20.79	105.8	±22.9	0, filter disabled	V_{DD} / 2	Single-ended AOUT only

RATIO = Ratiometricity to V_{DD}, FS = minimum Full Scale, FS_{5V} = Full Scale at V_{DD} = 5 V, Sx = Sensitivity, B_{THR} = OCD threshold level, OCD_{GL_MUL} = Deglitch filter setting, V_{OQ} = Quiescent output voltage, OP_{MODE} = Output mode.

1) Configuration can be changed by the user. Initial offset, offset drift over temperature and total drift are affected by the S_X configuration change.

2 Functional block diagram

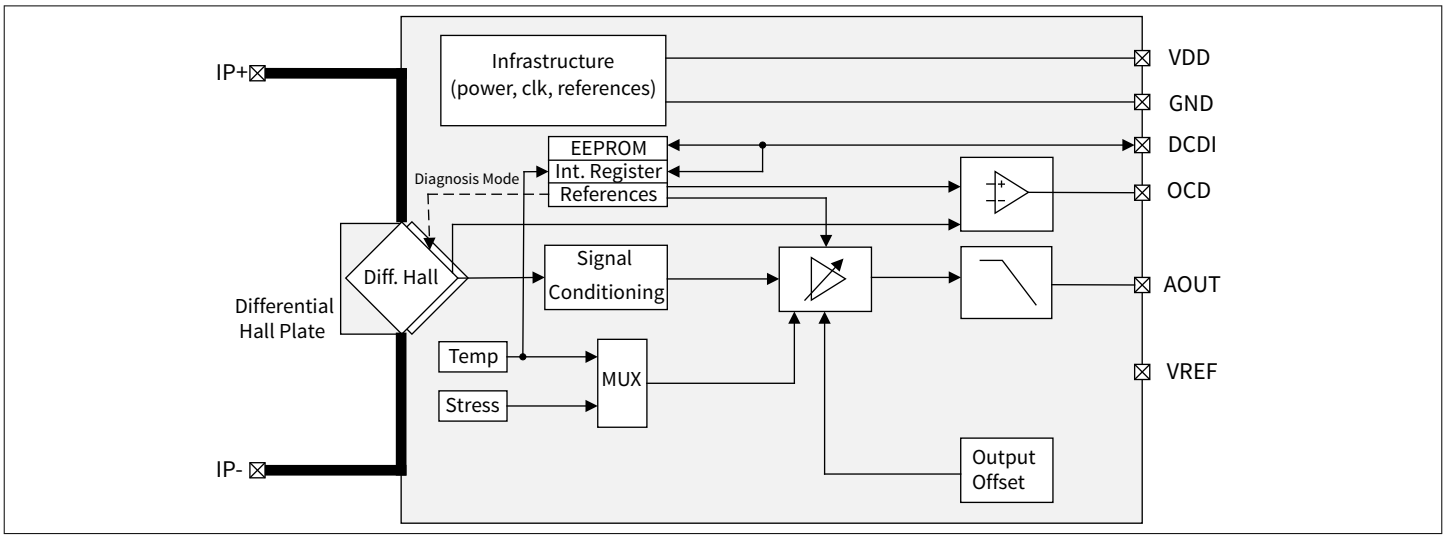

Figure 1 Device functional block diagram

The current flowing through an external current rail induces a magnetic field that is measured by two Hall probes differentially. The differential measurement principle provides superior magnetic stray field suppression. A high-performance amplifier combines the signal resulting from the differential field and the compensation information provided by the temperature and stress compensation unit. Finally, the amplifier output signal is fed into a differential output amplifier which drives the analog output of the sensor.

3 Pin configuration

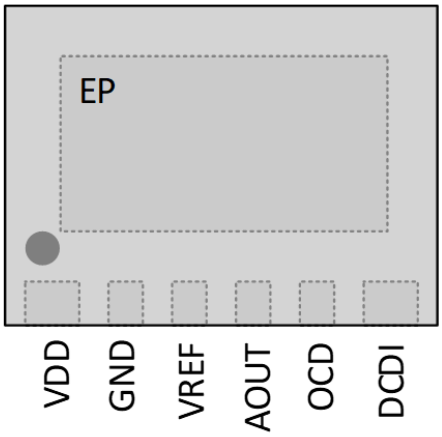

Figure 2 **Pin configuration (PG-VSON-6)**

Table 2 **Pin definitions and functions (PG-VSON-6)**

Pin No.	Symbol	Function	Comment
1	VDD	Supply voltage	–
2	GND	Ground	–
3	VREF	Not used	Keep open
4	AOUT	Analog output	–
5	OCD	Over Current Detection output	Open drain output, short to GND if not used
6	DCDI	DCDI communication interface	Open drain input / output, short to VDD if not used
7	EP	Exposed pad	Shall be connected to GND

4 General product characteristics

4.1 Absolute maximum ratings

Table 3 Absolute maximum ratings

Parameter	Symbol	Values			Unit	Note or condition
		Min.	Typ.	Max.		
Supply voltage maximum ratings	V_{DD}	-0.3	–	6.5	V	
Voltage on interface pins VREF, AOUT	V_{IO_A}	-0.3	–	V_{DD}	V	Pull-up resistors are connected to V_{DD}
Voltage on interface pins OCD, DCDI	V_{IO_D}	-0.3	–	V_{DD}	V	Pull-up resistors of the open-drain drivers are connected to V_{DD}
ESD voltage HBM (human body model)	V_{ESD_HBM}	-2	–	2	kV	Human Body Model (HBM), according to AEC Q100-002 standard
ESD voltage CDM (charged device model)	V_{ESD_CDM}	-1	–	1	kV	Charged Device Model (CDM), according to JEDEC JS-002 standard
Junction temperature maximum ratings	T_{J_MAX}	–	–	175	°C	
Storage temperature	T_{A_STORE}	-40	–	150	°C	

***Attention**: Stresses above those listed under "Absolute Maximum Ratings" may cause permanent damage to the device. This is a stress rating only and functional operation of the device at these or any other conditions above those indicated in the section "functional range" of this data sheet is not implied. Furthermore, only single error cases are assumed. More than one stress/error case may also damage the device. Exposure to absolute maximum rating conditions for extended periods may affect device reliability. During absolute maximum rating overload conditions the voltage on V_{DD} pins with respect to ground must not exceed the values defined by the absolute maximum ratings. Lifetime statements are an anticipation based on an extrapolation of Infineon's qualification test results. The actual lifetime of a component depends on its form of application and type of use etc. and may deviate from such statement. Lifetime statements shall in no event extend the agreed warranty period.*

4.2 Functional range

The following operating range must not be exceeded in order to ensure correct operation of the device. All parameters specified in the following sections refer to these operating conditions unless otherwise indicated.

Table 4 Functional range

Parameter	Symbol	Values			Unit	Note or condition
		Min.	Typ.	Max.		
Operating supply voltage	V_{DD}	4.5	5	5.5	V	
Ambient temperature	T_A	-40	–	150	°C	
Operating junction temperature	T_{J_OP}	-40	–	160	°C	
Capacitance on AOUT pin	C_{AOUT}	6	6.8	8	nF	Without series resistor, including parasitic capacitance on the board
Sensitivity calibration range	S_{CAL_MG}	-15	–	15	%	Minimum residual calibration range available for customer sensitivity calibration after Infineon end of production line

5 Product features

5.1 Electrical characteristics

Table 5 Electrical characteristics

Parameter	Symbol	Values			Unit	Note or condition
		Min.	Typ.	Max.		
Current consumption	I_{DD}	–	17.5	21	mA	I_{AOUT} = 0 mA
Programming current	I_{PROG}	–	–	25	mA	Total current consumption during EEPROM programming
Power-on delay time	t_{POR}	–	–	1.5	ms	V_{DD} rising 0 V to 5.0 V. Starts when the V_{DD} reaches the minimum allowed operating conditions and stops when the device is fully operational. OCD is set to GND within this time. DCDI pin is set to high ohmic 'Z'
Quiescent output voltage bidirectional	V_{OQBID}	–	$V_{DD}/2$	–	V	
Analog output linear range	V_{AOUT_LR}	0.3	–	4.7	V	V_{DD} = 5 V, -6.53 mA ≤ I(AOUT) ≤ 6.53 mA
Analog output drive capability	I_{AOUT}	-6.53	–	6.53	mA	DC current
Analog output saturation voltage	V_{CL_H}	–	–	300	mV	I(AOUT) = -6.53 mA
	V_{CL_L}	V_{DD} - 0.3	–	–	V	I(AOUT) = 6.53 mA
Analog output diagnosis mode output amplitude variation	V_{DIAG_VAR}	-20	–	20	%	Over temperature and life time with respect to diagnosis mode test signal

5.2 Sensing characteristics

Table 6 Sensing characteristics

Parameter	Symbol	Values			Unit	Note or condition
		Min.	Typ.	Max.		
Sensitivity, range S1	*S1*	–	52.89	–	mV/mT	Bidirectional output mode: • FS = ±34.04 mT • FS_{5V} = ±41.6 mT for V_{DD} = 5 V
Sensitivity, range S2	*S2*	–	63.47	–	mV/mT	Bidirectional output mode: • FS = ±28.36 mT • FS_{5V} = ±34.66 mT for V_{DD} = 5 V
Sensitivity, range S3	*S3*	–	84.63	–	mV/mT	Bidirectional output mode: • FS = ±21.27 mT • FS_{5V} = ±26 mT for V_{DD} = 5 V
Sensitivity, range S3.5	*S3.5*	–	105.8	–	mV/mT	Bidirectional output mode: • FS = ±17.01 mT • FS_{5V} = ±20.79 mT for V_{DD} = 5 V
Sensitivity, range S4	*S4*	–	126.95	–	mV/mT	Bidirectional output mode: • FS = ±14.18 mT • FS_{5V} = ±17.33 mT for V_{DD} = 5 V
Sensitivity, range S4.5	*S4.5*	–	148.12	–	mV/mT	Bidirectional output mode: • FS = ±12.15 mT • FS_{5V} = ±14.85 mT for V_{DD} = 5 V
Sensitivity, range S5	*S5*	–	169.26	–	mV/mT	Bidirectional output mode: • FS = ±10.64 mT • FS_{5V} = ±13 mT for V_{DD} = 5 V
Sensitivity, range S5.5	*S5.5*	–	190.44	–	mV/mT	Bidirectional output mode: • FS = ±9.45 mT • FS_{5V} = ±11.55 mT for V_{DD} = 5 V
Sensitivity, range S6	*S6*	–	253.89	–	mV/mT	Bidirectional output mode: • FS = ±7.09 mT • FS_{5V} = ±8.67 mT for V_{DD} = 5 V
Quiescent ratiometricity factor	K_{OQ}	–	1	–	–	
Sensitivity ratiometricity factor	K_S	–	1	–	–	

(table continues...)

Table 6 (continued) Sensing characteristics

Parameter	Symbol	Values			Unit	Note or condition
		Min.	Typ.	Max.		
Transfer function cutoff frequency	BW	120	210	–	kHz	-3dB criterion, C_{AOUT} = 6.8 nF
Output phase delay	φ_{DELAY}	–	43.2	60.5	°	f_{SIGNAL} = 120 kHz
Output group delay	φ_{G_DELAY}	–	1.0	1.4	µs	
Output group delay variation	$\varphi_{G_DELAY_VAR}$	-20	–	20	%	Over temperature and lifetime
Output noise density	B_{NOISE}	–	70	175	nT/√Hz	Referenced to input differential magnetic field. Typical value is for T_A = 25 °C. Max value is for T_A ≤ 150 °C [1)]
External homogeneous magnetic field suppression	B_{SR}	34	40	–	dB	With respect to the external homogeneous field applied, up to 20 mT. Frequency up to 4 kHz
Initial sensitivity error	E_{SENS}	-5.0	±2.7	5.0	%	Typical value is ±3 sigma. T_A = 25 °C; can be compensated in the application by end-of-line calibration at RT.
Sensitivity calibration resolution	E_{SENS_CAL}	–	0.12	–	%	Calibration resolution varies with calibration code. Further details to be found in the user manual
Sensitivity drift over temperature	E_{SENS_T}	-1.35	±0.8	1.35	%	Bidirectional output mode. Typical is ±3 sigma. At 0h. [2)]
Sensitivity drift over temperature and lifetime	E_{SENS_L}	-1.9	±1.2	1.9	%	Bidirectional output mode. T_A = 25°C to 150°C. [2) 3)]
Initial offset error	E_{OFF_INIT}	-100	±50	100	µT	In S3.5 range. Typical value is ± 3 sigma. T_A = 25 °C; can be compensated in the application by end-of-line calibration at RT
		-200	±80	200	µT	In S1 to S6 ranges, S3.5 excluded. Typical value is ± 3 sigma. T_A = 25 °C; can be compensated in the application by end-of-line calibration at RT
Offset calibration resolution	E_{OFF_CAL}	–	12.9	–	µT	Further details to be found in the user manual

(table continues...)

Table 6 (continued) Sensing characteristics

Parameter	Symbol	Values			Unit	Note or condition
		Min.	Typ.	Max.		
Output offset variation over temperature	E_{OFF_T}	-60	±35	60	µT	Bidirectional output mode in S3.5 range. Typical is ±3 sigma. At 0h. [2]
		-100	±50	100	µT	Bidirectional output mode in S1 to S6 ranges, S3.5 excluded. Typical is ±3 sigma. At 0h. [2]
Output offset variation over temperature and lifetime	E_{OFF_L}	-60	±35	60	µT	Bidirectional output mode in S3.5 range. [2] [3]
		-100	±50	100	µT	Bidirectional output mode in S1 to S6 ranges, S3.5 excluded. [2] [3]
Total drift over temperature	E_{TOT_T}	-1.6	±1	1.6	%	Bidirectional output mode in S3.5 range. Typical is ±3 sigma. At 0h. [2] Percentage of full scale. Includes sensitivity, offset and linearity errors.
Total drift over temperature and lifetime	E_{TOT_L}	-2	±1.35	2	%	Bidirectional output mode in S3.5 range. T_A = 25 °C to 150 °C. [2] [3] Percentage of full scale. Includes sensitivity, offset and linearity errors.
Sensitivity ratiometricity error over temperature and lifetime	E_{SRATIO_L}	–	±0.05	–	%/%V_{DD}	Bidirectional output mode. ±10% V_{DD} variation. [3]
Offset ratiometricity error over temperature and lifetime	E_{ORATIO_L}	–	±6	–	µT	Bidirectional output mode. ±10% V_{DD} variation. [3]
Temperature sensor sensitivity	S_{TEMP}	–	16	–	LSB/°C	
Temperature sensor RMS noise	$NRMS_{TEMP}$	–	–	0.5	°C	In the range of 25 °C to max operating T_J
Temperature sensor linearity error	E_{TEMP}	-5	–	5	°C	In the range of 25 °C to max operating T_J
Temperature sensor error	E_{TEMP_TOT}	-5	–	5	°C	T_J in the range 115°C to 135°C

(table continues...)

Table 6 (continued) Sensing characteristics

Parameter	Symbol	Values			Unit	Note or condition
		Min.	Typ.	Max.		
Temperature sensor error drift over lifetime	$E_{TEMP_TOT_L}$	-2	–	2	°C	T_J in the range 115°C to 135°C [3)]

1) Output noise density can be expressed according to the formula shown in Chapter 5.3.3.
2) Specified accuracy errors are only valid for the pre-programmed ratiometricity setting.
3) Min/Max values derived from AEC-Q100 qualification. Typical values are ±3 sigma values measured during AEC-Q100 qualification.

5.2.1 Full scale definition

The full scale input magnetic field range and the corresponding full scale output voltage range on AOUT pin are defined as follows.

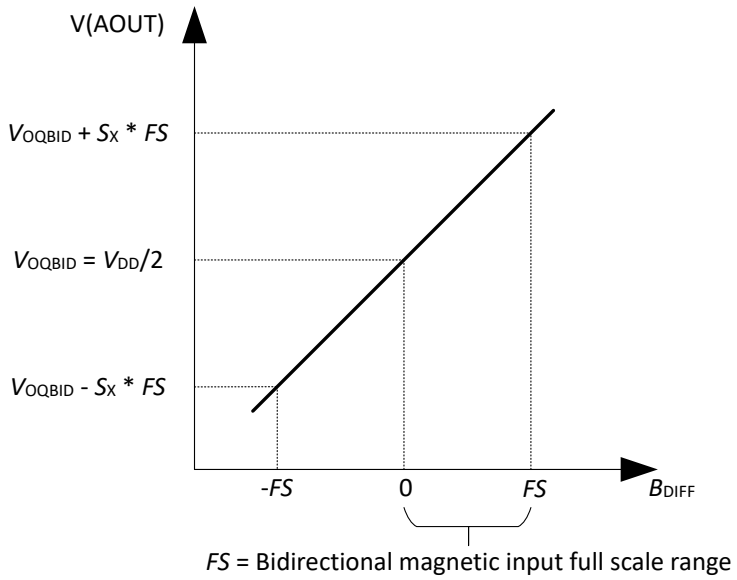

Figure 3 Full scale range definition (*FS*)

In Table 6 the full scale range *FS* is defined with respect to the sensitivity S_X. The total error drift specification in Table 6 considers the full scale range *FS* to be related to the maximum absolute value measurable by the sensor and not the whole excursion from -*FS* to +*FS*. Referring the total error to the whole excursion would reduce the total error, which is defined as % of *FS*, by factor 2.

5.3 Functional Description

5.3.1 Output voltage and current polarity

TLE4973 coreless magnetic current sensor measures the differential magnetic field caused by a current flowing in an external conductor. The figures below show that the magnetic fields B_{H1} and B_{H2} at the sensor's Hall cell position depend on the current I_{PN}. The sensor provides an output voltage with the same polarity of the current I_{PN}.

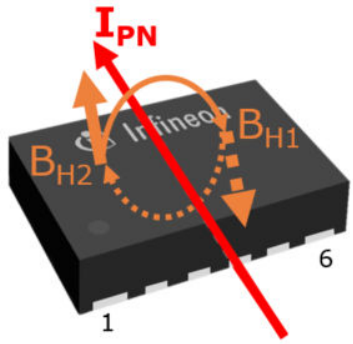

Figure 4 Current polarity (PG-VSON-6)

The current I_{PN} is positive when it flows in the direction as shown in the figure above through an external current rail.

5.3.2 Output behavior

5.3.2.1 Single-ended AOUT only output mode

The AOUT pin operates as an output and provides a single-ended output voltage.

Being S the sensitivity and V_{OQ} the quiescent voltage of the sensor, the output voltage on AOUT is described as follows:

$$V(AOUT) = V_{OQ} + S \cdot B_{DIFF} \tag{1}$$

Where B_{DIFF} is defined as the average differential magnetic field at the Hall probes location:

$$B_{DIFF} = \frac{B_{H1} - B_{H2}}{2} \tag{2}$$

The nominal quiescent voltage value at the pin AOUT is programmable at 2 different values (V_{OQBID}, V_{OQUNI}) and is ratiometric with respect to V_{DD} as defined in the following formula:

$$V_{OQ}\left(V_{DD}\right) = V_{OQ}\left(5V\right) \cdot \left[1 + \frac{(V_{DD} - 5V) \cdot K_{OQ}}{5V}\right] \tag{3}$$

Since nominal value of the ratiometric factor K_{OQ} is 1, the formula becomes:

$$V_{OQ}\left(V_{DD}\right) = \frac{V_{DD}}{2} \tag{4}$$

The sensitivity S is ratiometric to V_{DD} and is expressed as follows:

$$S\left(V_{DD}\right) = S\left(5V\right) \cdot \left[1 + \frac{(V_{DD} - 5V) \cdot K_S}{5V}\right] \tag{5}$$

Since the nominal value of the ratiometric factor is 1 the formula simplifies as follows:

$$S\left(V_{DD}\right) = S\left(5V\right) \cdot \frac{V_{DD}}{5V} \tag{6}$$

5.3.3 Output noise density

Output noise density referenced to input differential magnetic field can be expressed according to the following formula:

$$B_{NOISE} = \frac{V_{NOISE}}{\sqrt{\frac{\pi}{2} \cdot BW}} \cdot \frac{1}{S} \cdot 10^9 \tag{7}$$

Where:

- B_{NOISE} is the output noise density in [nT/√Hz];
- V_{NOISE} is the output noise voltage in [VRMS];
- BW is the transfer function cutoff frequency in [Hz];
- S is the sensitivity in [mV/mT].

5.3.4 Safety and diagnostic

5.3.4.1 OCD - Over Current Detection

The device provides fast Over Current Detection (OCD) output on OCD pin in case of an over-current event. Over-current condition is present when the input current absolute value (positive or negative) is higher than the chosen threshold level.

5.3.4.1.1 OCD pins external connection

The OCD pin operates as active low, open-drain output. This allows easy setup of a wired-AND configuration enabling the monitoring of several current sensors outputs via only one microcontroller pin. The OCD pins can be connected to a logic input pin of the microcontroller and/or the gate-driver, to quickly react to over current events.

The device has an EEPROM option to configure over current detection output to latched or not-latched mode.

In case latched mode is selected, OCD output is permanently latched to low state on over-current event. Latch can be reset via DCDI interface.

In case not-latched mode is selected,OCD output is set to low state on overcurrent event on the current rail and is released when overcurrent event disappears.

5.3.4.1.2 OCD thresholds

The threshold level of the OCD output is programmable. Threshold level is used symmetrically for positive and negative over current events. The possible thresholds levels can be calculated with the formulas below:

$$OCD_{THR} = \frac{B_{THR} \cdot 1000}{TF} = \frac{[(OCD_{CODE} \cdot 1.745) + 10.714]_{[mT]} \cdot 1000}{TF} \tag{8}$$

Where:

- OCD_{THR} is the OCD threshold level in [A];
- B_{THR} is the nominal OCD threshold level in [mT];
- OCD_{CODE} is the decimal value of a 6 bits code;
- TF is the current rail transfer factor in [µT/A].

Table 7 TLE4973 OCD thresholds

OCD_{CODE}	B_{THR} [mT]	Notes
0	10.7	Minimum setting
7	22.9	Pre-programmed setting
63	121	Maximum setting

5.3.4.1.3 OCD output timing behavior

OCD output features a deglitch filter with programmable deglitching delay time in order to avoid false OCD triggers due to noise spikes on the current rail. The specified deglitching timing is valid when the input current step overtakes the threshold of at least 10%. As a consequence, the OCD output will only be activated when the over-current condition is present for a time interval longer than the chosen deglitching delay. See more detailed explanation in the OCD timing diagram. Available options for deglitching delay include 0 and are listed in the OCD parameters table.

Deglitching delay associated with OCD output is reset as soon as the over-current condition is removed.

Figure below shows the OCD output pin nominal behavior during an overcurrent event and defines important timing quantities for which the limits are listed in the parameters table.

Overcurrent pulse 1 is an overcurrent event, where the duration of the overcurrent condition exceeds the overcurrent response time t_{D_OCD} + response time jitter Δt_{D_OCD} + deglitch filter time $t_{DEGLITCH}$. Overcurrent conditions 2 and 3 are not long enough to trigger the OCD output. Pulse 2 is shorter than the overcurrent response time t_{D_OCD} and therefore no OCD event is generated. In overcurrent condition 3, the overcurrent condition is longer than the response time t_{D_OCD} + response time jitter Δt_{D_OCD}, but is not exceeding the glitch filter time $t_{DEGLITCH}$ and no OCD event is generated.

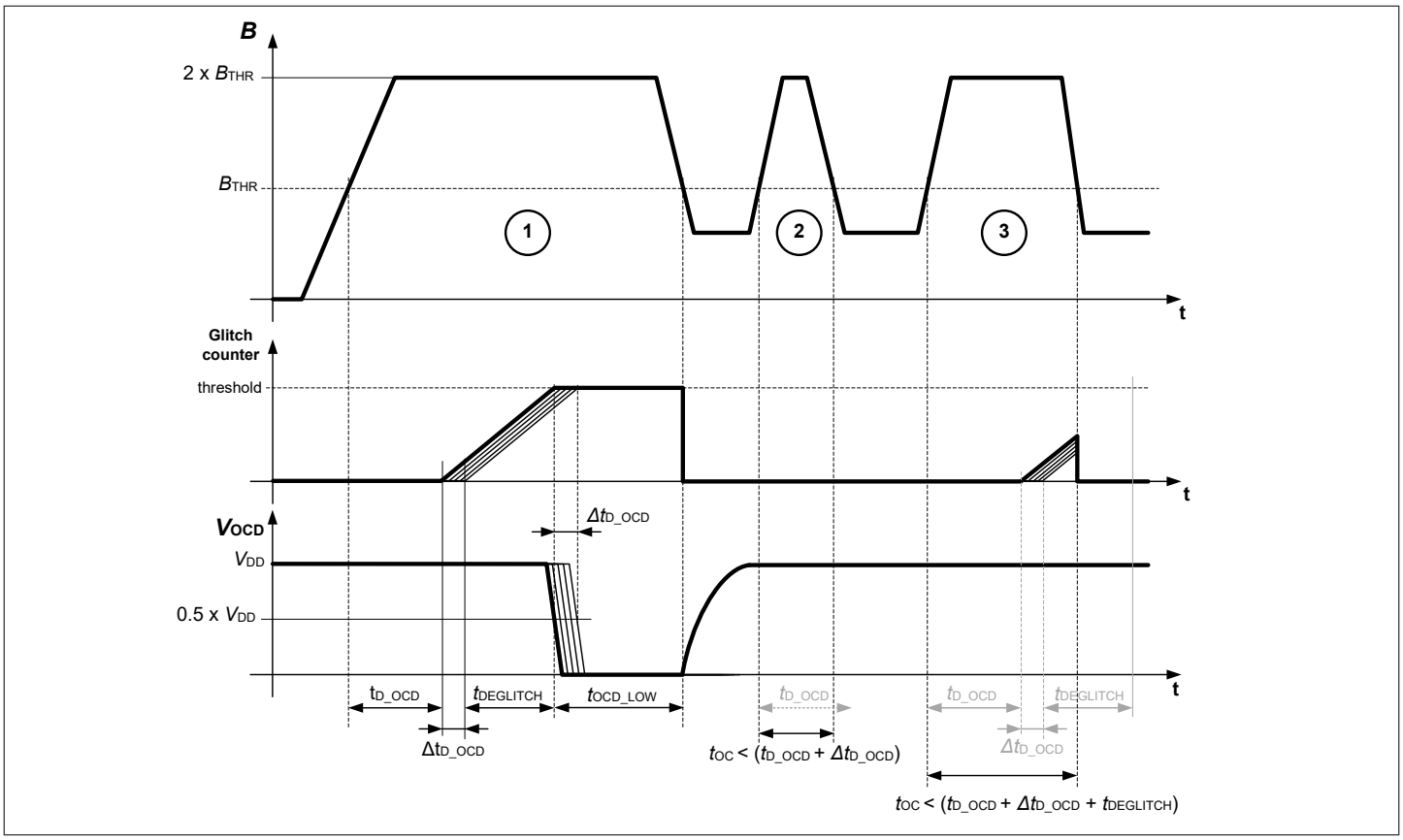

Figure 5 **OCD output timing behavior**

Note: *General conditions (unless otherwise specified): C_{OCD} = 1 nF; R_{OCD_PU} = 4.7 kΩ*

Table 8 **OCD characteristics**

Parameter	Symbol	Values			Unit	Note or condition
		Min.	Typ.	Max.		
Threshold level tolerance	OCD_{THR_TOL}	-10	–	+10	%	
OCD detection minimum time	t_{OCD_LOW}	3	–	–	µs	Once the over-current is signaled on the OCD, the signal is kept active for at least this time
OCD response time	t_{D_OCD}	–	0.7	1.0	µs	B_{DIFF} = 2 x B_{THR} [1)]
OCD fall time	t_{F_OCD}	–	100	150	ns	From 90% to 10% V_{DD}. Load capacitance C_L = 1 nF
OCD response time jitter	Δt_{D_OCD}	–	–	0.11	µs	standard deviation, B_{DIFF} = 2 x B_{THR}, input rise time 1 µs
OCD de-glitch filter basic time	t_{OCDGL}	400	500	600	ns	
OCD de-glitch filter setting	OCD_{GL_MUL}	0	–	7	–	$t_{DEGLITCH}$ = OCD_{GL_MUL} x t_{OCDGL}; pre-configured setting = 0 [2)]

(table continues...)

Table 8 (continued) OCD characteristics

Parameter	Symbol	Values			Unit	Note or condition
		Min.	Typ.	Max.		
OCD load capacitance	C_{OCD}	–	1	1.3	nF	
OCD pull-up resistor	R_{OCD_PU}	0.9	4.7	10	kΩ	To V_{DD}
OCD low-side resistance	R_{OCD_LOW}	–	–	100	Ω	From OCD pin to GND, when OCD pin is driven low

1) Falling edge level of OCD-pin < 0.5 x V_{DD}.
2) The specified deglitching timing is valid when input current step overtakes the threshold of at least 10%.

The device triggers an OCD diagnosis mode when a correspondent command is received through the DCDI interface, in regular operating mode (after the startup time).

It is possible to set the OCD output pin into over current detection mode only. In this mode the OCD pin would not indicate an error except under or overvoltage on the OCD pin.

5.3.4.2 Undervoltage / Overvoltage detection

The device activates OCD output and suspends DCDI communication if its own voltage power supply (V_{DD}) is in an under-voltage condition.

Under-voltage condition is present when V_{DD} is between the values indicated in the V_{DD_OCD} parameter.

In case of overvoltage condition, the sensor provides supply fault indication by disabling the DCDI interface.

Over-voltage condition is present if V_{DD} higher than the over-voltage threshold parameter (V_{OV_RES}).

Table 9 Undervoltage / Overvoltage characteristics

Parameter	Symbol	Values			Unit	Note or condition
		Min.	Typ.	Max.		
Undervoltage/ Overvoltage detection delay	t_{UVOV_DELAY}	1	2.4	3	µs	
Undervoltage reset threshold	V_{UV_RES}	4.2	–	–	V	V_{DD} falling
Undervoltage release threshold	V_{UV_REL}	–	–	4.5	V	V_{DD} rising
OCD undervoltage condition	V_{DD_OCD}	2.7	–	V_{UV_REL}	V	OCD pulled to "low" level
Overvoltage reset threshold	V_{OV_RES}	–	–	5.8	V	V_{DD} rising
Overvoltage release threshold	V_{OV_REL}	5.5	–	–	V	V_{DD} falling

5.3.4.3 DCDI - Digital Control Diagnostic Interface

The device provides a bus compatible fast one-wire DCDI communication interface on pin DCDI operating as input/output.

The DCDI interface is a single-master, multi-slave UART based interface.

The DCDI pin operates as open-drain.

The device provides a mechanism to detect an internal saturation of the analog output. The detection information is provided on the DCDI interface.

5.3.4.3.1 DCDI slave addressing

The device provides an auto-addressing functionality in order to allow the master in the system to address different sensors connected on a bus.

After the device receives the auto addressing broadcast the slave provides its dynamic address (modulated in a voltage level) to the master via the AOUT pin. The master performs the auto addressing broadcast command as long as all sensors provide a unique dynamic address on the dedicated AOUT pin. After the master addresses the dynamic slave address and reassign a static address to each slave, the static address will be stored in the device EEPROM. Up to 8 independent slaves can be addressed by the system.

It is possible that the sensor uses the static address stored in EEPROM, if the EEPROM is configured to use stored address (static). In this case broadcast command to automatically change the address is ignored.

5.3.4.3.2 DCDI features

The EEPROM of the device is programmable via the DCDI interface.

It is possible to read the calibration related register content via the DCDI interface.

The DCDI interface protocol layer provides internal errors status information to the master node within each communication frame.

If OCD diagnosis mode or analog output diagnosis mode are activated, the diagnosis mode status bit in the DCDI interface frame will be set to '1'.

The sensor provides the status of the single internal safety mechanisms if requested by master.

Digital value proportional to the internally measured temperature can be read through the DCDI interface.

The DCDI end-to-end frame protection provides a failure detection rate of more than 99% .

For additional information please refer to the user manual of the device.

Table 10 DCDI characteristics

Parameter	Symbol	Values			Unit	Note or condition
		Min.	Typ.	Max.		
DCDI number of slaves	$DCDI_{SLV}$	–	–	8	–	The number of slaves to be addressed and served in one system
DCDI communication speed	$DCDI_{SP}$	2400	–	57600	bit/s	The baud rate is programmable in 6 different speeds (57600 / 38400 / 19200 / 9600 / 4800 / 2400 bit/s) configurable through 3 bits
DCDI bus voltage	$DCDI_{VBUS}$	–	V_{DD}	–	V	The voltage level for the pull up resistor has the same specification as the sensor supply voltage V_{DD}
DCDI low voltage level	V_{DCDI_LOW}	–	–	1	V	Low state, transition from high to low

(table continues...)

Table 10 (continued) DCDI characteristics

Parameter	Symbol	Values			Unit	Note or condition
		Min.	Typ.	Max.		
DCDI high voltage level	V_{DCDI_HIGH}	1.6	–	–	V	High state, transition from low to high
DCDI pull-up resistor	R_{DCDI_PU}	433	–	1320	Ω	
DCDI low-side resistance	R_{DCDI_LOW}	–	–	100	Ω	From DCDI pin to GND, when DCDI pin is driven low
DCDI maximum bus load	C_{DCDI}	–	–	1.25	nF	Baud rate = 57600 bit/s. For slower baud rates higher capacitance values are allowed.

5.3.4.4 Diagnostic mode

The device triggers an analog diagnosis mode when the corresponding command is received through DCDI interface in regular operating mode (after the startup time).

The test signal is programmable at four nominal values.

Table 11 Diagnostic mode

Parameter	Symbol	Values			Unit	Note or condition
		Min.	Typ.	Max.		
Diagnosis mode test amplitude 1	$B_{TST_DIAG_1}$	–	5	–	mT	
Diagnosis mode test amplitude 2	$B_{TST_DIAG_2}$	–	10	–	mT	
Diagnosis mode test amplitude 3	$B_{TST_DIAG_3}$	–	15	–	mT	
Diagnosis mode test amplitude 4	$B_{TST_DIAG_4}$	–	20	–	mT	

6 Application Information

6.1 Application circuit example for single-ended AOUT only output mode

The figure below shows an example application circuit of the device. Numbers in the application diagram are examples for typical values that could be used in the application.

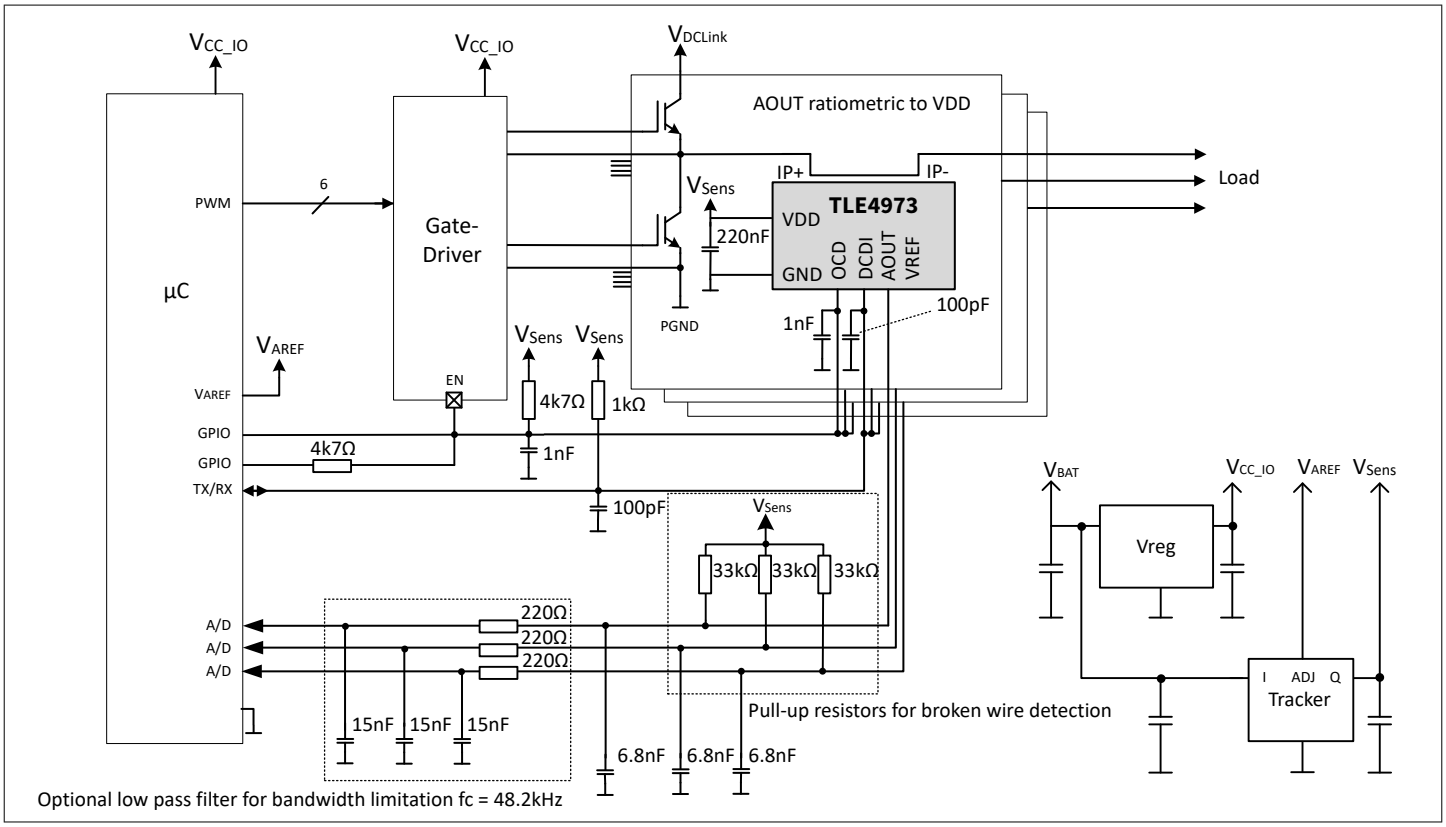

Figure 6 Example application diagram for single-ended AOUT only output mode

Note: This is a simplified example of an application circuit. The function must be verified in the real application.

7 Package

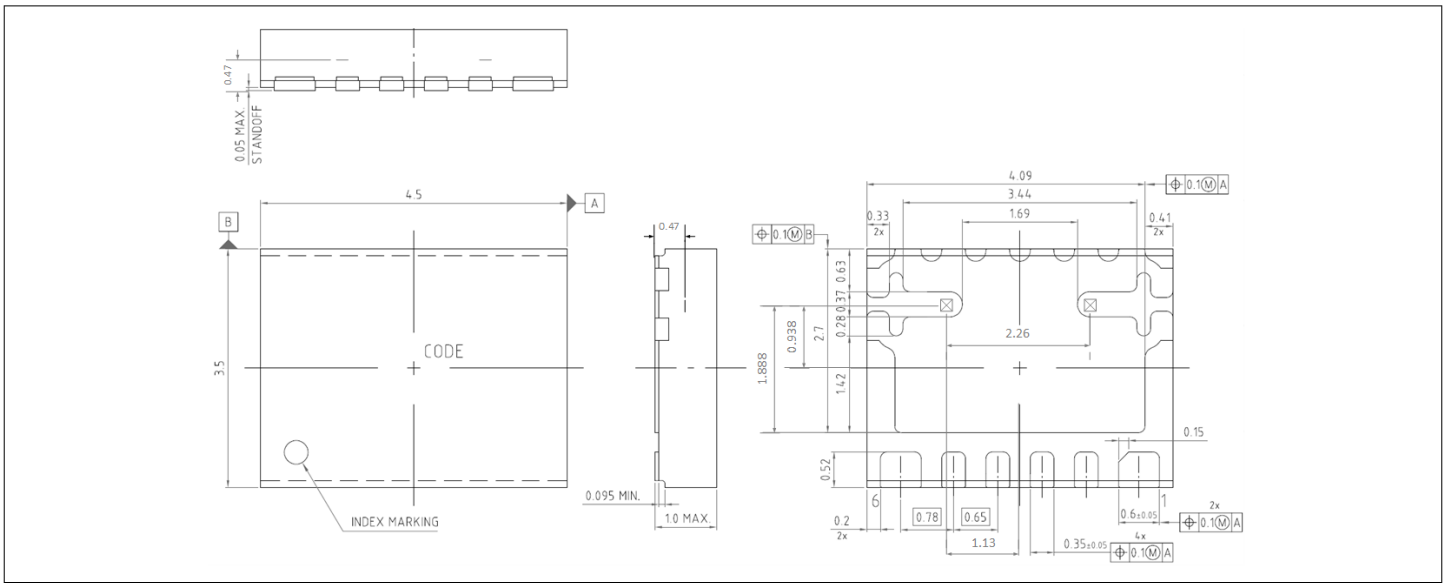

Figure 7 **PG-VSON-6 package outline. Sensing elements position not in scale**

Table 12 **Package grade and moisture sensitivity level according to AEC Q100 standard**

Package	Grade	MSL
PG-VSON-6	0	3

The package marking of the device in PG-VSON-6 is as shown in the figure below.

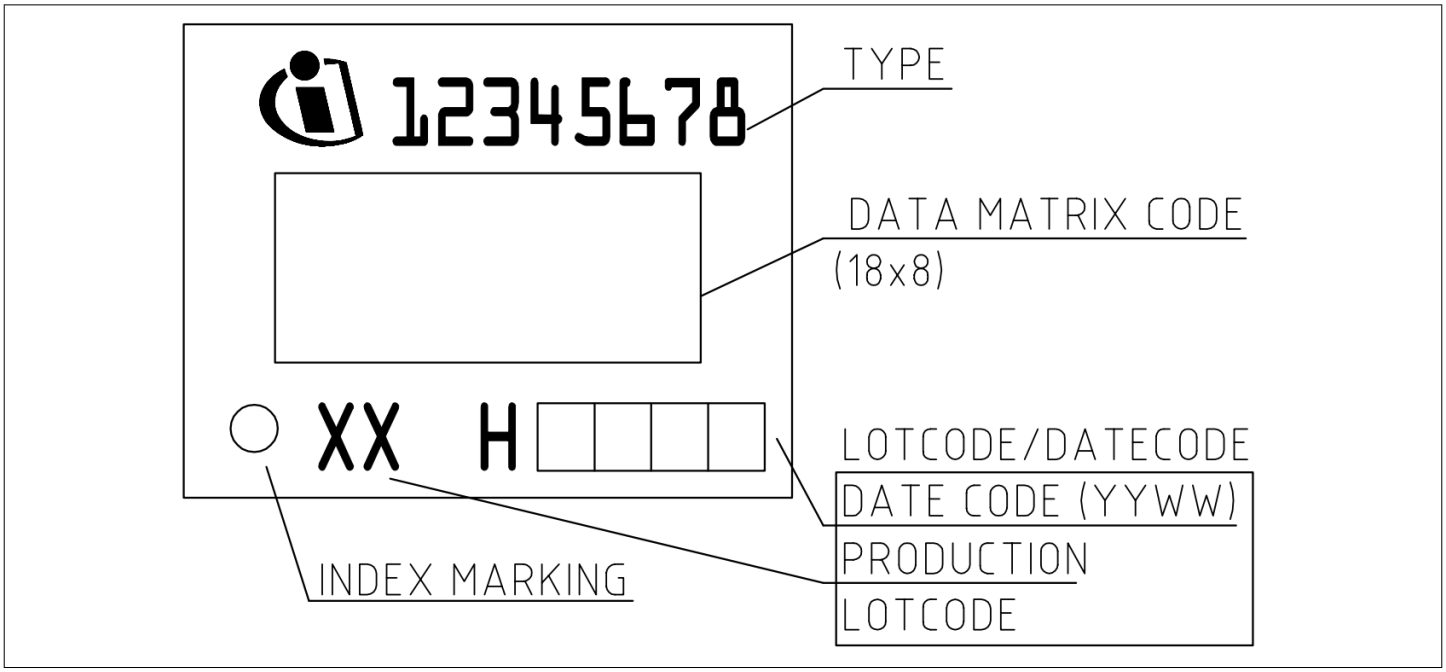

Figure 8 **Package marking (PG-VSON-6)**

8 Revision History

Table 13 Revision History

Revision number	Date of release	Description of changes
1.20	2026-04-09	Total error specification for the integrated temperature sensor for junction temperature in the range 115°C to 135°C
1.10	2025-09-19	Enabled reprogramming of Sx ranges
1.00	2025-07-10	Initial release

Trademarks

All referenced product or service names and trademarks are the property of their respective owners.

Edition 2026-04-09

Published by

Infineon Technologies AG

81726 Munich, Germany

© 2026 Infineon Technologies AG

All Rights Reserved.

Do you have a question about any aspect of this document?

Email: erratum@infineon.com

Document reference
IFX-bri1737986748851

Important notice

The information given in this document shall in no event be regarded as a guarantee of conditions or characteristics ("Beschaffenheitsgarantie").

With respect to any examples, hints or any typical values stated herein and/or any information regarding the application of the product, Infineon Technologies hereby disclaims any and all warranties and liabilities of any kind, including without limitation warranties of non-infringement of intellectual property rights of any third party.

In addition, any information given in this document is subject to customer's compliance with its obligations stated in this document and any applicable legal requirements, norms and standards concerning customer's products and any use of the product of Infineon Technologies in customer's applications.

The data contained in this document is exclusively intended for technically trained staff. It is the responsibility of customer's technical departments to evaluate the suitability of the product for the intended application and the completeness of the product information given in this document with respect to such application.

Warnings

Due to technical requirements products may contain dangerous substances. For information on the types in question please contact your nearest Infineon Technologies office.

Except as otherwise explicitly approved by Infineon Technologies in a written document signed by authorized representatives of Infineon Technologies, Infineon Technologies' products may not be used in any applications where a failure of the product or any consequences of the use thereof can reasonably be expected to result in personal injury.