Datasheet

Features

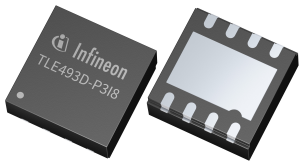

Green

AEC Qualified

ISO 26262 compliant

- Best accuracy package-size fit
- Operating supply voltage 3.3 V and 5 V
- ISO 26262 SEooC for safety requirements up to ASIL B
- 3D magnetic field sensing of ±50, ±100 and ±160 mT
- Enables low power applications
- Integrated temperature measurement
- Operating temperature range T_j = -40°C to 150°C
- 2 MHz SPI for measurement control and data read out

Potential applications

- Long stroke linear position measurement
- Angular position measurement
- Control elements: turn indicator, gear stick, joystick, thumbwheel...
- Pedal/valve position sensing

Benefits

- Component reduction due to 3D magnetic measurement principle
- Wide application range addressable due to high flexibility
- Platform adaptability due to device configurability
- Very low system power consumption due to Wake Up mode

Product validation

Qualified for automotive applications. Product validation according to AEC-Q100.

Description

This sensor measures the magnetic field in three orthogonal dimensions and operates as SPI bus slave. An external SPI master device, e.g. a microcontroller, is used to configure the sensor and read-out the measurement data. The sensor is developed according to ISO26262 and provides built-in diagnosis functions to support functional safety applications with ASIL-B. A Wake Up function provides the capability to wake up a sleeping system.

Product Type	Marking[1)]	Ordering Code
TLE493D-P3I8	E5	SP005633649

[1] Engineering samples are marked with "SA".

Table of contents

Features . . . 1
Potential applications . . . 1
Product validation . . . 1
Description . . . 1
Table of contents . . . 2
1 Block diagram . . . 4
2 Pin Configuration, Definition of Magnetic Field and Sensitive Area . . . 5
2.1 Pin Configuration . . . 5
2.2 Definition of the magnetic field . . . 6
2.3 Sensitive Area . . . 6
3 General Product Characteristics . . . 7
3.1 Absolute maximum ratings . . . 7
3.2 Functional range . . . 7
3.3 Current Consumption and Pin Characteristics . . . 8
3.4 Sensor reset . . . 9
4 Product Features . . . 10
4.1 Measurement . . . 10
4.1.1 Magnetic measurements . . . 11
4.1.2 Temperature measurement . . . 13
4.1.3 Compensation and calibration . . . 14
4.1.4 Measurement Timing . . . 15
4.2 Wake Up . . . 19
4.3 Diagnosis . . . 20
4.4 Test functions . . . 21
4.4.1 Vhall bias/Vext test function . . . 21
4.4.2 Spintest/Vint test function . . . 22
4.4.3 SAT test function . . . 24
4.5 Trigger options in the Master Controlled Mode . . . 25
5 Functional Block Description . . . 26
5.1 SPI interface . . . 26
5.1.1 SPI protocol description . . . 26
5.1.1.1 SPI write command . . . 26
5.1.1.2 SPI read commands . . . 28
5.1.1.3 SPI timing characteristics . . . 30
5.2 Registers . . . 32
5.2.1 Registers overview . . . 32
5.2.2 Register descriptions . . . 33

5.2.2.1 Magnetic X-value MSBs register . . . 33
5.2.2.2 Magnetic X-value LSBs register . . . 33
5.2.2.3 Magnetic Y-value MSBs register . . . 34
5.2.2.4 Magnetic Y-value LSBs register . . . 34
5.2.2.5 Magnetic Z-value MSBs register . . . 34
5.2.2.6 Magnetic Z-value LSBs register . . . 35
5.2.2.7 Temperature value MSBs register . . . 35
5.2.2.8 Temperature value LSBs register . . . 35
5.2.2.9 Communication CRC . . . 36
5.2.2.10 Diagnosis register . . . 36
5.2.2.11 Sensor mode register 1 . . . 37
5.2.2.12 Sensor mode register 2 . . . 38
5.2.2.13 Wake Up X-high threshold MSBs register . . . 39
5.2.2.14 Wake Up X-low threshold MSBs register . . . 39
5.2.2.15 Wake Up Y-high threshold MSBs register . . . 40
5.2.2.16 Wake Up Y-low threshold MSBs register . . . 40
5.2.2.17 Wake Up Z-high threshold MSBs register . . . 40
5.2.2.18 Wake Up Z-low threshold MSBs register . . . 41
5.2.2.19 Wake Up XY thresholds LSBs register . . . 41
5.2.2.20 Wake Up Z thresholds LSBs register . . . 41
5.2.2.21 Reset register . . . 42
5.2.2.22 Unique chip identifier register 0 . . . 42
5.2.2.23 Unique chip identifier register 1 . . . 43
5.2.2.24 Unique chip identifier register 2 . . . 43
5.2.2.25 Unique chip identifier register 3 . . . 43
5.2.2.26 Unique chip identifier register 4 . . . 44
5.2.2.27 Unique chip identifier register 5 . . . 44

6 Application Information . . . 45

7 Package Information . . . 46
7.1 Package Parameters . . . 46
7.2 Package Outlines . . . 47

8 Terminology . . . 49

9 Revision history . . . 50

Disclaimer . . . 51

1 Block diagram

The main functions and its cooperation is shown in the block diagram

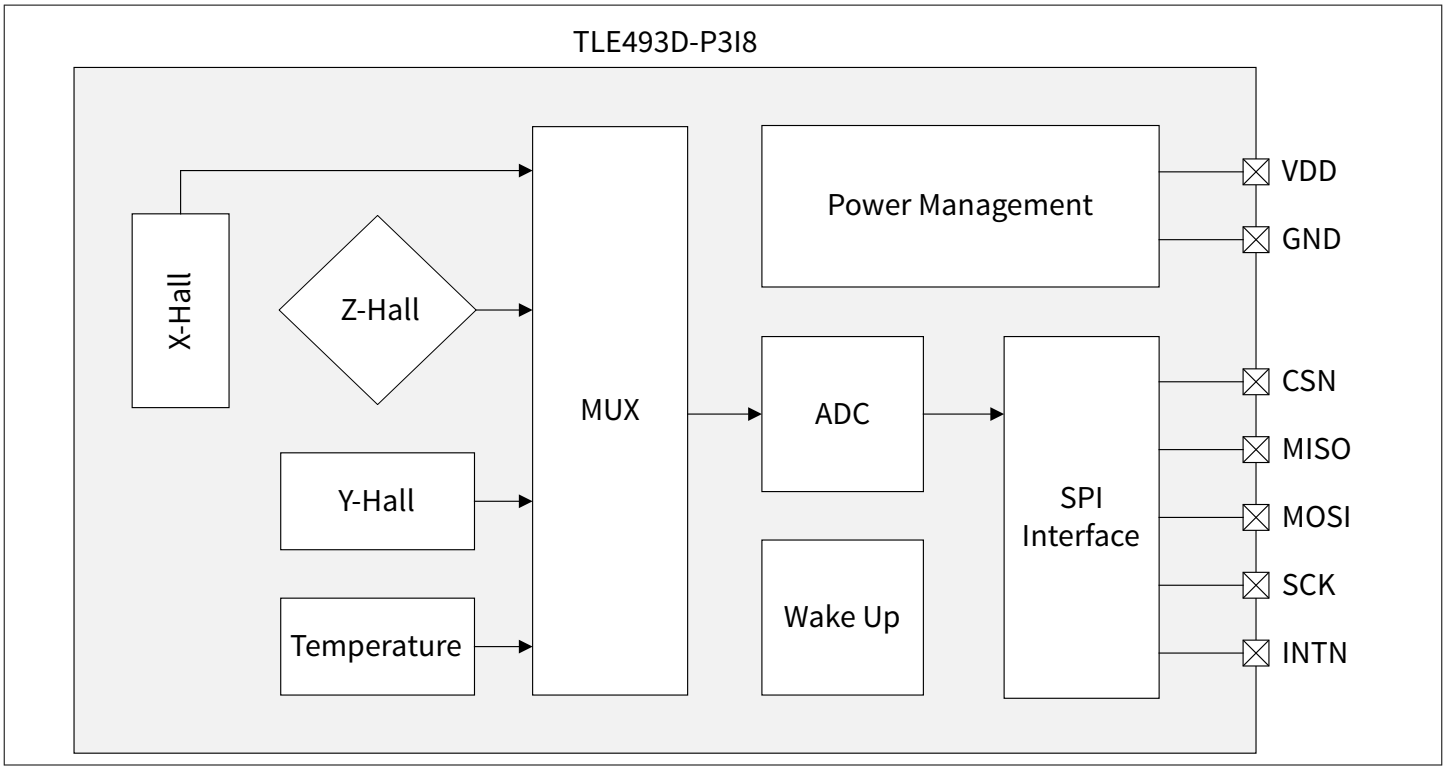

Figure 1 Block Diagram

2 Pin Configuration, Definition of Magnetic Field and Sensitive Area

The sensor's electrical and magnetical connecting point to the application are the pin configuration, the definition of the magnetic field direction and the sensitive area, which are listed in the following subchapters.

2.1 Pin Configuration

The pinout of the sensor is the following:

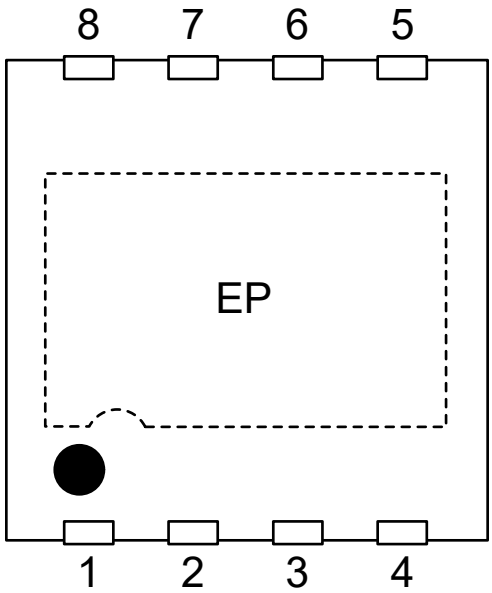

Figure 2 **Sensor pinout**

Table 1 **PG-VSON-8-2 pin description and configuration (see Figure 2)**

Pin number	Name	Description
1	MOSI	SPI serial data input
2	MISO	SPI serial data output
3	NC	Not connected (it is recommended to connect this pin externally to GND)
4	VDD	Supply pin
5	GND	Ground pin
6	CSN	SPI chip select not input
7	SCK	SPI serial clock input
8	INTN	Interrupt output pin (if INTN is not used, it is recommended to connect this pin externally to GND)
EP	EP-GND	Exposed Pad: This pin must be connected to GND externally.

2.2 Definition of the magnetic field

A positive field is considered as south-pole facing the corresponding Hall element. Figure 3 shows the definition of the magnetic field directions X, Y and Z of the 3D-Hall sensor.

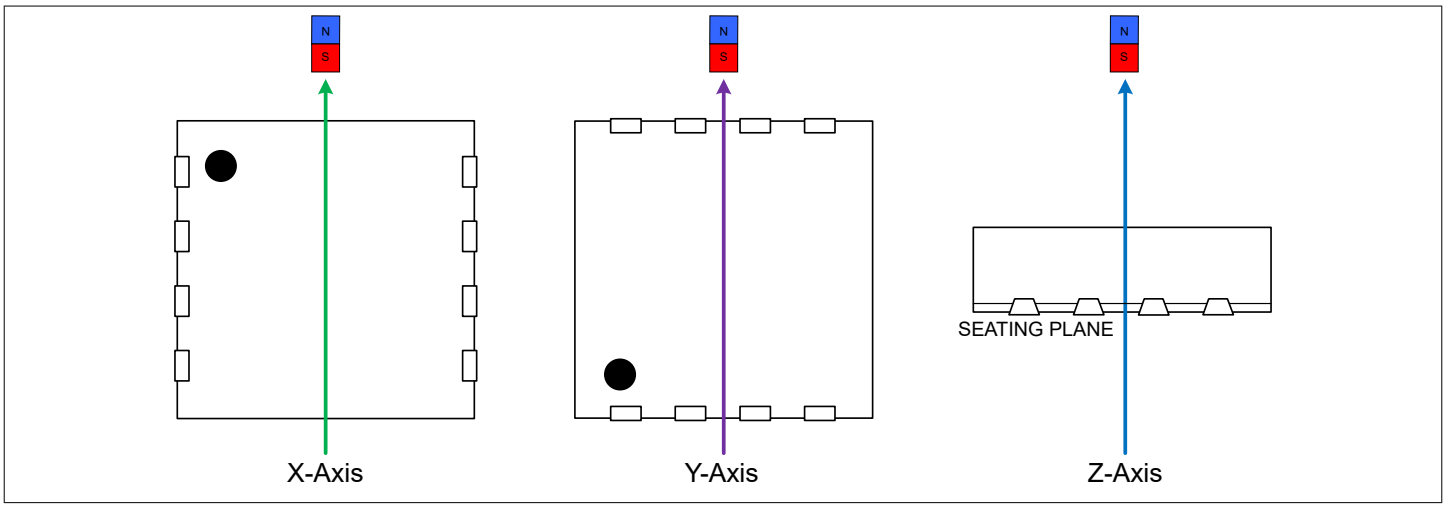

Figure 3 Definition of magnetic field direction

2.3 Sensitive Area

The magnetic sensitive area for the Hall measurement is shown in Figure 4.

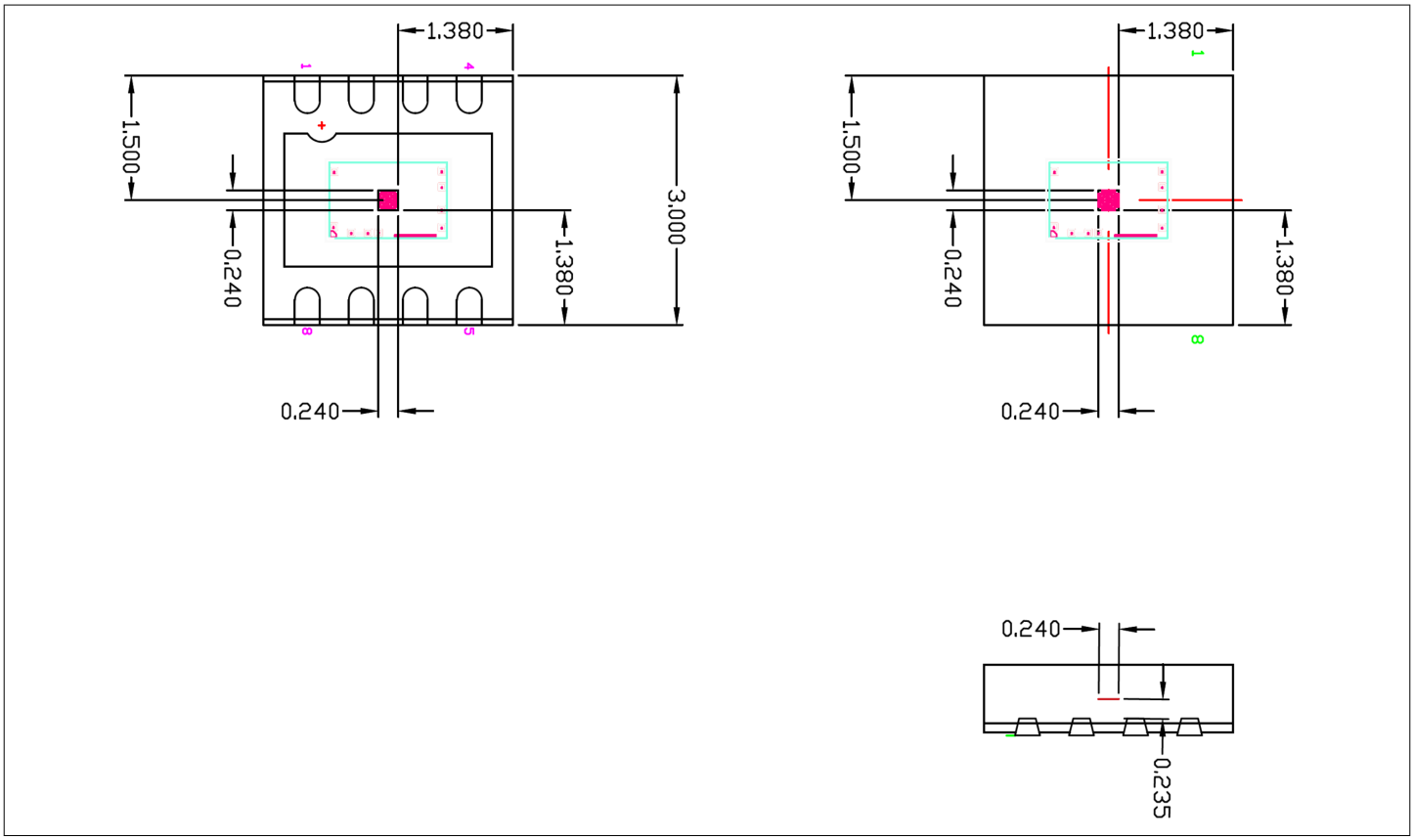

Figure 4 Center of sensitive Area (dimensions in mm)

3 General Product Characteristics

This chapter describes the environmental conditions required by the device (magnetic, thermal and electrical).

3.1 Absolute maximum ratings

Stresses above those listed under Table 2 may cause permanent damage to the device. This is a stress rating only and functional operation of the device at these or any other conditions above those indicated in the operational sections of this specification is not implied. Exposure to absolute maximum rating conditions for extended periods may affect device reliability.

Table 2 Absolute maximum ratings

Parameter	Symbol	Values			Unit	Note or condition
		Min.	Typ.	Max.		
Junction temperature	T_j	-40	–	150	°C	
Voltage on any pin to GND	V_{max}	-0.3	–	6	V	
Voltage range on MISO, MOSI, CSN, SCK, and INTN to GND	V_{IO_max}	–	–	V_{DD} + 0.5	V	
Magnetic field	B_{max}	–	–	±1	T	

Table 3 ESD robustness

Ambient temperature T_a = 25°C

Parameter	Symbol	Values			Unit	Note or condition
		Min.	Typ.	Max.		
ESD robustness (HBM)	$V_{ESD\text{-}HBM}$	-4	–	4	kV	For all pins [2]
ESD robustness (CDM)	$V_{ESD\text{-}CDM_corner}$	-0.75	–	0.75	kV	For corner pins [3]
ESD robustness (CDM)	$V_{ESD\text{-}CDM}$	-0.5	–	0.5	kV	For all pins [3]

3.2 Functional range

This sensor is designed to operate within the conditions described in this chapter.

Table 4 Functional Range

Parameter	Symbol	Values			Unit	Note or condition
		Min.	Typ.	Max.		
Operating temperature	T_j	-40	–	150	°C	
Operating supply voltage	V_{DD}	2.8	–	5.5	V	
Register reset level	V_{res}	1	–	2.3	V	
Register reset level hysteresis	$V_{res\text{-}hys}$	25	50	–	mV	
ADC restart level	V_{ADCr}	2.3	2.6	2.8	V	min. ADC operating level

(table continues...)

2 Human Body Model (HBM) robustness: Class HBM 3A according to AEC-Q100-002.
3 Charged Device Model (CDM) robustness: Class C2b according to AEC-Q100-011.

Table 4 (continued) Functional Range

Parameter	Symbol	Values			Unit	Note or condition
		Min.	Typ.	Max.		
ADC restart hysteresis	$V_{ADCr\text{-}hys}$	25	50	–	mV	
Magnetic range (full range)	B_{XYZ}	-160	–	160	mT	
Magnetic range (short range)	B_{XYZ_SR}	-100	–	100	mT	
Magnetic range (extra short range)	B_{XYZ_XSR}	-50	–	50	mT	

If the supply voltage V_{DD} drops below the "register reset" the sensor enters an undefined state. If the supply voltage V_{DD} recoveres above the "register reset" threshold the sensor registers are reset to their default values. This register reset is indicated with the "rst_flg" bit.

As long as V_{DD} remains above the sensors "register reset" threshold the digital interface is working as specified.

After a register reset the sensor enters the following state:

- INTN disabled
- Low power mode with f_{Update} = 1kHz (typ.)
- Collision avoidance disabled
- Full range

3.3 Current Consumption and Pin Characteristics

The electrical parameters are listed in Table 5.

Table 5 Electrical Pin Characteristics

All voltages with respect to ground, positive current flowing into pin

Parameter	Symbol	Values			Unit	Note or condition
		Min.	Typ.	Max.		
Supply current Power Down	I_{DD_pd}	–	500	1000	nA	T_j = 25°C; supply current at VDD pin in power down; no communication and no floating pins at the interface
Supply current Power Down @ 85°C	I_{DD_pd}	–	–	6	µA	T_j = 85°C; supply current at VDD pin in power down; no communication and no floating pins at the interface
Supply current active	I_{DD_active}	–	4.2	6	mA	Supply current at VDD pin while ADC active
Supply current at power up	I_{DD_pu}	–	–	8.5	mA	Supply current at VDD pin during power up
Input voltage low threshold	V_{IL}	25	–	–	% V_{DD}	all input pads
Input voltage high threshold	V_{IH}	–	–	75	% V_{DD}	all input pads
Input voltage hysteresis	V_{IHYS}	5	–		% V_{DD}	all input pads
Output voltage low level, MISO	V_{OL}	–	–	0.4	V	static load, I_{OL} = 2 mA

(table continues...)

Table 5 (continued) Electrical Pin Characteristics

All voltages with respect to ground, positive current flowing into pin

Parameter	Symbol	Values			Unit	Note or condition
		Min.	Typ.	Max.		
Output voltage high level, MISO	V_{OH}	V_{DD} - 0.4	–	–	V	static load, I_{OH} = -2 mA
Output voltage low level, INTN	V_{OL_INTN}	–	–	0.4	V	static load, I_{OL} = 5 mA
Fall time INTN signal	t_{FALL}	–	0.25	0.3	µs	70% V_{DD} to 30% V_{DD}, see application circuit
IO pin leakage current	$I_{leakage_IO}$	-3	–	3	µA	0 V ≤ V_{IO} ≤ V_{DD} MISO, MOSI, SCK, INTN
CSN pin leakage current	$I_{leakage_CSN}$	-45	–	1	µA	0 V ≤ V_{IO} ≤ V_{DD}; CSN
MISO, MOSI, SCK pin capacitance	C_{MISO}, C_{MOSI}, C_{SCK}	–	–	10	pF	
CSN pin capacitance	C_{CSN}	–	–	35	pF	

$$I_{DD_avg} \approx f_{Update} \cdot \left(I_{DD_{active}} \cdot t_{ADC} + I_{DD_pd} \cdot \left(\frac{1}{f_{Update}} - t_{ADC} \right) \right)$$

Equation 1 Measurement cycle averaged, typical I_{DD} current consumption estimation formula

Timing details are described in chapter Measurement Timing.

3.4 Sensor reset

This sensor provides internal and external reset functionality.

Internal:

- Register reset, resets the sensor after power up or under voltage events.
- ADC restart, refreshes a measurement in case of inefficient supply voltage.

External:

- Software reset, provides a software driven reset via SPI.

Software reset

The operation to perform a sensor reset is the following:

- microcontroller sets the soft_rst bit to '1'

4 Product Features

The ability of the magnetic and thermal measurements are described as well as the Wake Up feature. Diagnosis features are available with each measurement in contrary to test functions, which needs to be triggered by the microcontroller independent from any measurement.

4.1 Measurement

This sensor is intended to provide a space saving 3DHall solution. This implies that the sensor provides uncompensated raw data which can be compensated in a microcontroller. The equations and explanations, needed for the compensation, are described in the chapter "Compensation and calibration". In this chapter are also provided information for further improvement of the measurement accuracy, which can be achieved with a end of line calibration of the sensor.

The nomenclature of the used symbols is illustrated in the following holistic figure.

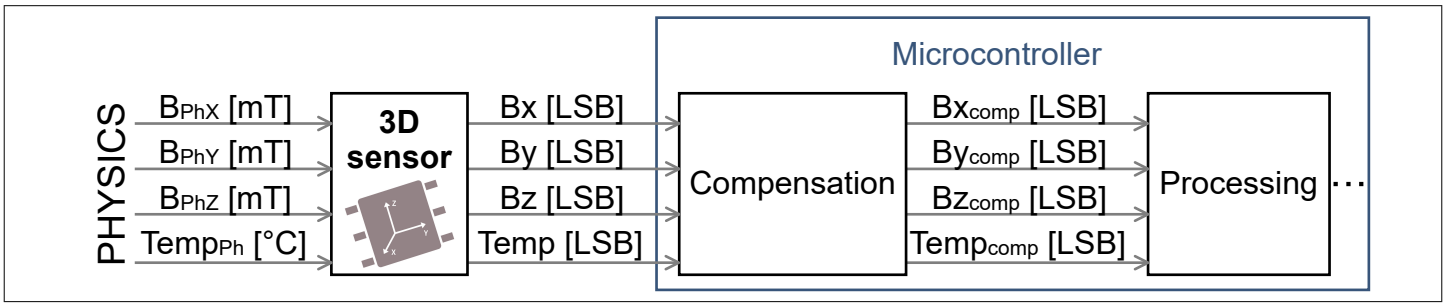

Figure 5 **Measurement symbol definition**

Table 6 **Measurement symbol definition**

Physical values	Sensor raw measurement values	Compensated measurement values
B_{PhX} [mT]	Bx [LSB]	Bx_{comp} [LSB]
B_{PhY} [mT]	By [LSB]	By_{comp} [LSB]
B_{PhZ} [mT]	Bz [LSB]	Bz_{comp} [LSB]
$Temp_{Ph}$ [°C]	Temp [LSB]	$Temp_{comp}$ [LSB]

The compensation in the microcontroller can be implemented according to the chapter Compensation and calibration.

4.1.1 Magnetic measurements

The magnetic measurement values are provided in the two's complement with 14 bit resolution in the registers with the symbols Bx, By and Bz.

Table 7 Initial magnetic characteristics

Values for 0 h and T_j = 25°C (unless otherwise specified)

Parameter	Symbol	Values			Unit	Note or condition
		Min.	Typ.	Max.		
Sensitivity X, Y, Z (full range)	S_X, S_Y, S_Z	23	29.5	38	LSB_{14}/mT	
Sensitivity X, Y, Z (short range)	S_{X_SR}, S_{Y_SR}, S_{Z_SR}	46	59	76	LSB_{14}/mT	
Sensitivity X, Y, Z (extra short range)	S_{X_XSR}, S_{Y_XSR}, S_{Z_XSR}	92	118	152	LSB_{14}/mT	
Offset X, Y, Z (all ranges)	O_X, O_Y, O_Z	-0.5	±0.2	0.5	mT	B_{Ph} = 0 mT
X to Y magnetic matching (all ranges)	M_{XY}	-5	±1	5	%	
X/Y to Z magnetic matching (all ranges)	$M_{X/YZ}$	-15	±5	15	%	

Table 8 Compensated magnetic drift characteristics

Drifts are changes from the initial characteristics due to external influences.

Values for all range settings, static magnetic field within full magnetic linear range (unless otherwise specified).

All values are compensated according Compensation and calibration.

Parameter	Symbol	Values			Unit	Note or condition
		Min.	Typ.	Max.		
Sensitivity drift X, Y, Z	$S_{X_D_comp}$, $S_{Y_D_comp}$, $S_{Z_D_comp}$	-9	–	9	%	T_j = -40...85°C
		-10	±5	10		T_j = -40...105°C
		-10.5	–	10.5		T_j = -40...125°C
		-14	–	14		T_j = -40...150°C
Offset drift X, Y, Z	$O_{X_D_comp}$, $O_{Y_D_comp}$, $O_{Z_D_comp}$	-0.3	–	0.3	mT	T_j = -40...85°C, B_{Ph} = 0 mT
		-0.3	–	0.3		T_j = -40...105°C, B_{Ph} = 0 mT
		-0.3	–	0.3		T_j = -40...125°C, B_{Ph} = 0 mT
		-0.5	–	0.5		T_j = -40...150°C, B_{Ph} = 0 mT
X to Y magnetic matching drift	$M_{XY_D_comp}$	-1.65	–	1.65	%	T_j = -40...85°C
		-1,7	-	1,7		T_j = -40...105°C
		-1.9	–	1.9		T_j = -40...125°C
		-2.5	–	2.5		T_j = -40...150°C
X/Y to Z magnetic matching drift	M_{X/YZ_D_comp}	-6.5	–	6.5	%	T_j = -40...85°C
		-6.75	–	6.75		T_j = -40...105°C
		-8	–	8		T_j = -40...125°C
		-8.5	–	8.5		T_j = -40...150°C

Table 9 Raw magnetic drift characteristics

Drifts are changes from the initial characteristics due to external influences.

Values for T_j = -40°C to 105°C, all ranges, static magnetic field within full magnetic linear range (unless otherwise specified). Without compensation.

Parameter	Symbol	Values			Unit	Note or condition
		Min.	Typ.	Max.		
Sensitivity drift X, Y, Z	S_{X_D}, S_{Y_D}, S_{Z_D}	-12.7	–	12.7	%	
Offset drift X, Y, Z	O_{X_D}, O_{Y_D}, O_{Z_D}	-0.35	–	0.35	mT	B_{Ph} = 0 mT
X to Y magnetic matching drift	M_{XY_D}	-1.7	–	1.7	%	
X/Y to Z magnetic matching drift	M_{X/YZ_D}	-7.5	–	7.5	%	

Table 10 Magnetic non-linearity and noise

Values for T_j = -40°C to 105°C (unless otherwise specified)

Parameter	Symbol	Values			Unit	Note or condition
		Min.	Typ.	Max.		
Integral non linearity (full range)	INL	-40	–	40	LSB_{14}	Bx, By and Bz
Integral non linearity (short range)	INL_{SR}	-80	–	80	LSB_{14}	Bx, By and Bz
Integral non linearity (extra short range)	INL_{XSR}	-160	–	160	LSB_{14}	Bx, By and Bz
Differential non linearity (full range)	DNL	-16	–	16	LSB_{14}	Bx, By and Bz
Differential non linearity (short range)	DNL_{SR}	-32	–	32	LSB_{14}	Bx, By and Bz
Differential non linearity (extra short range)	DNL_{XSR}	-64	–	64	LSB_{14}	Bx, By and Bz
Z-magnetic noise (full range, rms)	B_{NeffZ}	–	–	173	µT	rms = 1 sigma
XY-magnetic noise (full range, rms)	B_{NeffXY}	–	–	250	µT	rms = 1 sigma
Z-magnetic noise (short range, rms)	B_{NeffZ_SR}	–	–	122	µT	rms = 1 sigma
XY-magnetic noise (short range, rms)	B_{NeffXY_SR}	–	–	176	µT	rms = 1 sigma
Z-magnetic noise (extra short range, rms)	B_{NeffZ_XSR}	–	–	86	µT	rms = 1 sigma
XY-magnetic noise (extra short range, rms)	B_{NeffXY_XSR}	–	–	125	µT	rms = 1 sigma

$$M_{XY} = 100 \cdot 2 \cdot \frac{S_X - S_Y}{S_X + S_Y} \; [\%]$$

Equation 2 Equation for parameter "X to Y magnetic matching"

$$M_{X/YZ} = 100 \cdot 2 \cdot \frac{S_X + S_Y - 2 \cdot S_Z}{S_X + S_Y + 2 \cdot S_Z} \; [\%]$$

Equation 3 Equation for parameter "X/Y to Z magnetic matching"

4.1.2 Temperature measurement

The sensor provides an internal temperature measurement proportional to the junction temperature. The result can be read out from the Temp register with 14 bit resolution.

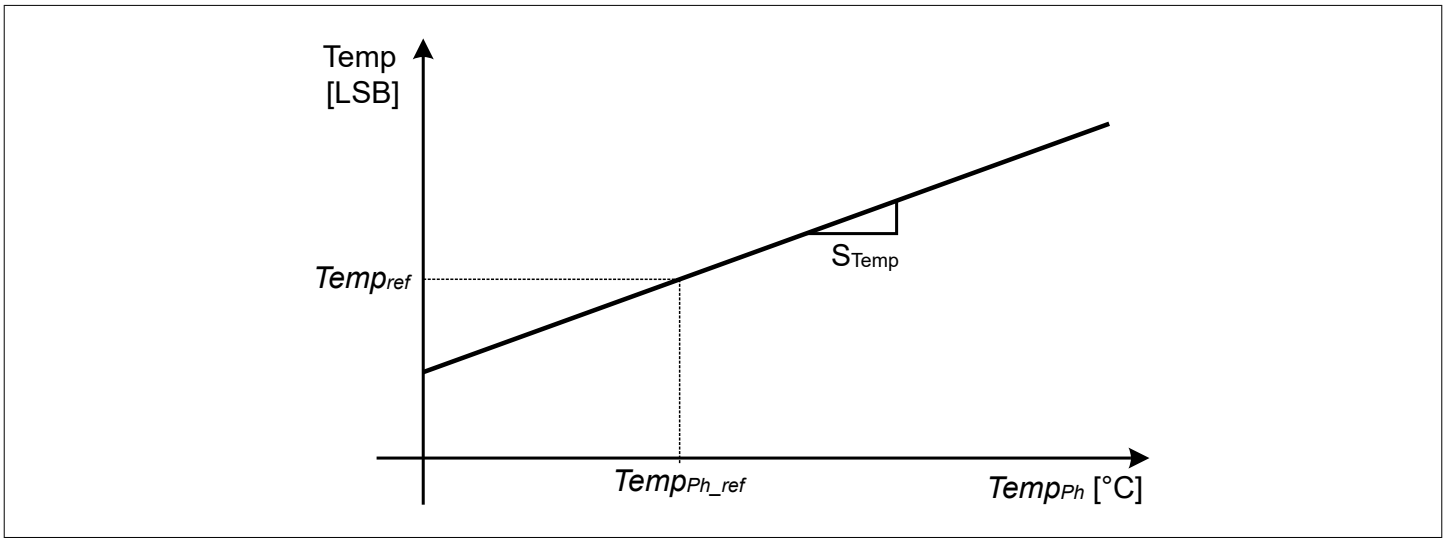

Figure 6 Temperature measurement

The temperature information is used in the external compensation to improve the accuracy of the magnetic measurement over the full temperature range.

It is further possible to utilize the temperature sensor data in the application. Note that the measured temperature is proportional to the junction temperature and may deviate from the respective ambient temperature.

Table 11 Temperature measurement characteristics

Parameter	Symbol	Values			Unit	Note or condition
		Min.	Typ.	Max.		
Temperature sensitivity	S_{Temp}	13.3	15.2	17.2	LSB_{14}/K	referring to T_j
Temp reference value	$Temp_{ref}$	3880	4200	4500	LSB_{14}	$Temp_{Ph} = Temp_{Ph_ref}$
Physical temperature reference	$Temp_{Ph_ref}$	–	25	–	°C	

4.1.3 Compensation and calibration

The values $Bxyz_{comp}$ must be calculated with the following equations out of the sensors raw data Bxyz.

$$Bx_{comp} = r \cdot (O_{0x} + O_{1x} \cdot Temp + O_{2x} \cdot Temp^2 + O_{3x} \cdot Temp^3) + Bx \cdot (L_{0x} + L_{1x} \cdot Temp + L_{2x} \cdot Temp^2 + L_{3x} \cdot Temp^3)$$

$$By_{comp} = r \cdot (O_{0y} + O_{1y} \cdot Temp + O_{2y} \cdot Temp^2 + O_{3y} \cdot Temp^3) + By \cdot \left(L_{0y} + L_{1y} \cdot Temp + L_{2y} \cdot Temp^2 + L_{3y} \cdot Temp^3\right)$$

$$Bz_{comp} = r \cdot (O_{0z} + O_{1z} \cdot Temp + O_{2z} \cdot Temp^2 + O_{3z} \cdot Temp^3) + Bz \cdot (L_{0z} + L_{1z} \cdot Temp + L_{2z} \cdot Temp^2 + L_{3z} \cdot Temp^3)$$

Equation 4

Table 12 Compensation range factors

Factor	Full range	Short range	Extra short range
r	1	2	4

Table 13 Compensation coefficients

Parameter	Symbol	Values			Unit	Note or condition
		Min.	Typ.	Max.		
Coefficient O0x	O_{0x}	–	52.46501931	–	–	
Coefficient O1x	O_{1x}	–	$-30.828402 \cdot 10^{-3}$	–	–	
Coefficient O2x	O_{2x}	–	$6.06444 \cdot 10^{-6}$	–	–	
Coefficient O3x	O_{3x}	–	$-4.20546 \cdot 10^{-10}$	–	–	
Coefficient L0x	L_{0x}	–	-2.109359211	–	–	
Coefficient L1x	L_{1x}	–	$2.248525 \cdot 10^{-3}$	–	–	
Coefficient L2x	L_{2x}	–	$-5.25818 \cdot 10^{-7}$	–	–	
Coefficient L3x	L_{3x}	–	$3.99648 \cdot 10^{-11}$	–	–	
Coefficient O0y	O_{0y}	–	7.574714985	–	–	
Coefficient O1y	O_{1y}	–	$-4.602293 \cdot 10^{-3}$	–	–	
Coefficient O2y	O_{2y}	–	$8.61016 \cdot 10^{-7}$	–	–	
Coefficient O3y	O_{3y}	–	$-7.47545 \cdot 10^{-11}$	–	–	
Coefficient L0y	L_{0y}	–	-2.106808409	–	–	
Coefficient L1y	L_{1y}	–	$2.234594 \cdot 10^{-3}$	–	–	
Coefficient L2y	L_{2y}	–	$-5.22864 \cdot 10^{-7}$	–	–	
Coefficient L3y	L_{3y}	–	$3.97614 \cdot 10^{-11}$	–	–	
Coefficient O0z	O_{0z}	–	9.233258372	–	–	
Coefficient O1z	O_{1z}	–	$-3.911673 \cdot 10^{-3}$	–	–	
Coefficient O2z	O_{2z}	–	$7.01838 \cdot 10^{-7}$	–	–	
Coefficient O3z	O_{3z}	–	$-4.38542 \cdot 10^{-11}$	–	–	
Coefficient L0z	L_{0z}	–	-0.96458813	–	–	
Coefficient L1z	L_{1z}	–	$1.445091 \cdot 10^{-3}$	–	–	
Coefficient L2z	L_{2z}	–	$-3.42739 \cdot 10^{-7}$	–	–	
Coefficient L3z	L_{3z}	–	$2.63 \cdot 10^{-11}$	–	–	

4.1.4 Measurement Timing

For a good adaptation on application requirements this sensor is equipped with 2 modes:

- Low Power Mode: In this mode the measurements are triggered sensor internally.
- Master Controlled Mode: In this mode the measurements are triggered externally.

In both modes, in between the measurements, the sensor is in Power Down.

The measurement modes can be configured for a

- 3 dimensional and temperature measurement
- 2 dimensional measurement
- 1 dimensional and temperature measurement for X and Z

An overview is listed in Table 14.

Table 14 Overview of modes

Mode	Measurement	Typ. f_{Update}	Description
Power Down	No measurements	-	Lowest possible supply current I_{DD_pd}.
Low Power Mode (full range, short range and extra short range)	Bx, By, Bz, Temp	16 Hz	Self triggered cyclic measurements. f_{Update} is valid with the second conversion after power up and/or register reset.
	Bx, By	31 Hz	
	Bx, Temp	125 Hz	
	Bz, Temp	1000 Hz	
Master Controlled Mode (full range)	Bx, By, Bz, Temp	Up to 3.7 kHz	Measurements are triggered by the microcontroller.
	Bx, By	Up to 7 kHz	
	Bx, Temp		
	Bz, Temp		
Master Controlled Mode (short range)	Bx, By, Bz, Temp	Up to 2.7 kHz	
	Bx, By	Up to 5.3 kHz	
	Bx, Temp		
	Bz, Temp		
Master Controlled Mode (extra short range)	Bx, By, Bz, Temp	Up to 1.8 kHz	
	Bx, By	Up to 3.6 kHz	
	Bx, Temp		
	Bz, Temp		

The sequence of the measurement is always the same, independent of the measurement configuration. The timing of a measurement depends on the selected configuration. From measurement timing point of view important contributors are:

- measurement range (full range, short range, extra short range)
- configured measurements (3 dimensional and temperature or 2 dimensional or 1 dimensional and temperature)

The configuration of the measurement modes (Low Power Mode or Master Controlled Mode) influences the update frequency of the measurement results.

ADC restart

In case of a voltage drop during t_{ADC} ($V_{res} < V_{DD} < V_{ADCr}$) the measurement is aborted and as soon as the supply voltage recovers $V_{DD} > V_{ADCr}$ the full measurement is restarted at the beginning of t_{ADC}. The "measurement success flag" indicates a successfully finished measurement.

The timings of a measurement (t_{Bx}, t_{By}, t_{Bz}, t_{Temp}, t_{trig_d}, t_{INTN_d}, t_{INTN}, $1/f_{Update}$) are shown in the following picture, as well as the points in time when measurement values for Bx, By, Bz and Temp are available in the registers.

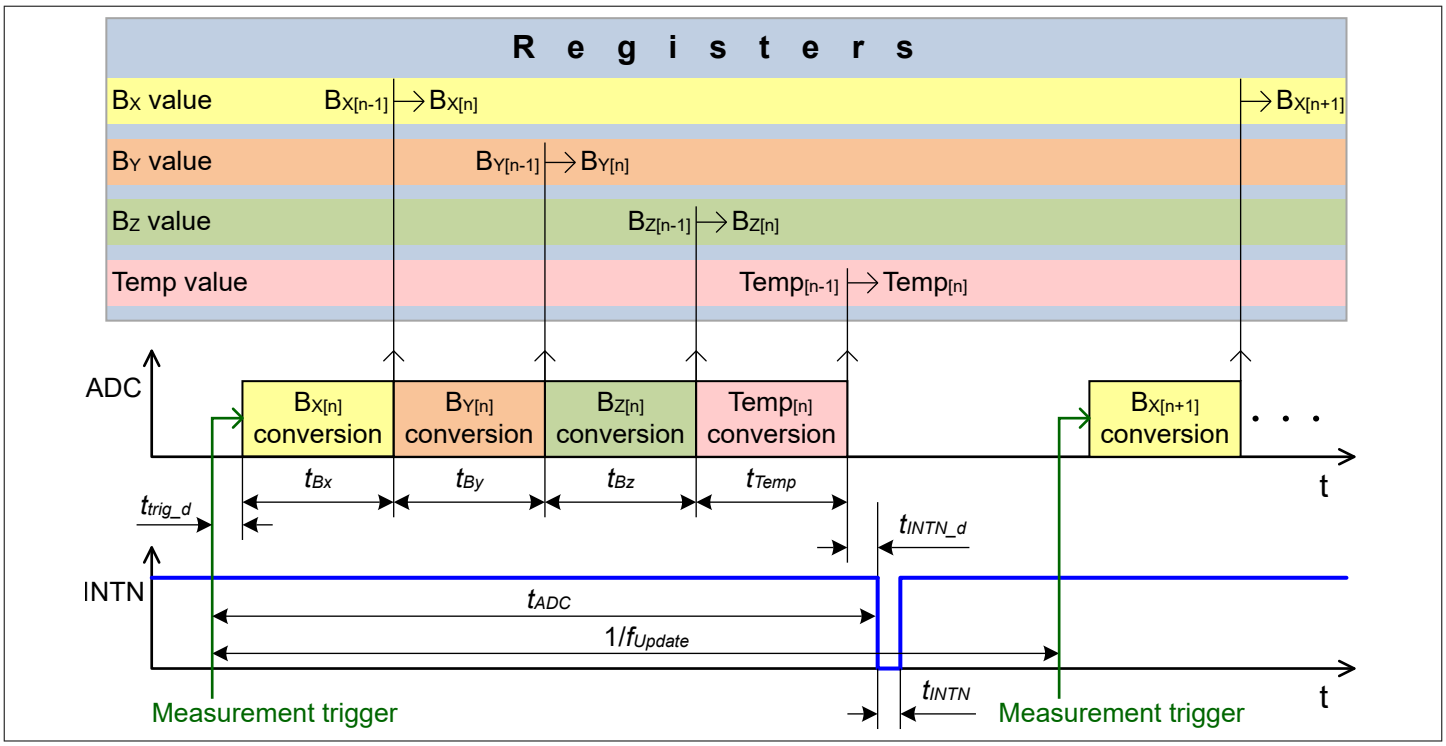

Figure 7 **Measurement timing**

Measurement triggers are described in

- ADC trigger before reading data
- ADC trigger at the CSN rising edge

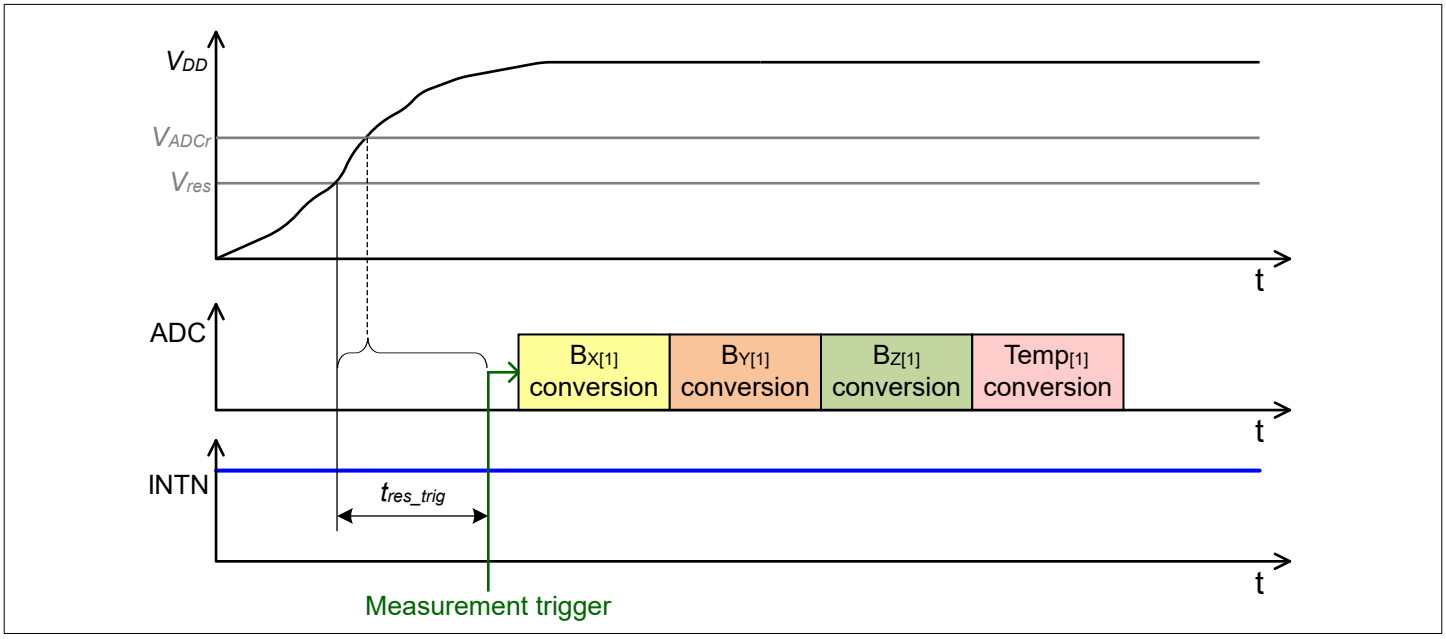

Figure 8 **1st measurement time after a register reset (V_{res}) and a ADC restart ($VADC_r$)**

Table 15 Measurement timing

Parameter	Symbol	Values			Unit	Note or condition
		Min.	Typ.	Max.		
Oscillator period	t_{osc}	360	500	640	ns	
First measurement time	t_{res_trig}	–	–	75	µs	ADC restart (V_{ADCr}) within t_{res_trig}. See Figure 8
Trigger delay	t_{trig_d}	10	16	23	µs	

Measurement oscillator cycles

The sensor timings are derived from the sensors oscillator periode t_{OSC}.

Table 16 Measurement oscillator cycles

Parameter	Symbol	Values			Unit
		full range	short range	extra short range	
INTN pulse width	t_{INTN}	5	5	5	t_{OSC}
Bx, By, Bz conversion time	t_{Bx}. t_{By}, t_{Bz}	86	118	182	t_{OSC}
Temp conversion time	t_{Temp}	86	86	86	t_{OSC}
INTN delay	t_{INTN_d}	1	1	1	t_{OSC}

4.2 Wake Up

This Wake Up mode can be used to allow the sensor to continue performing magnetic field measurements while the microcontroller is in the power-down state, which means the power consumption of the application is significantly reduced and the microcontroller accesses the sensor only if relevant measurement data are available.

For each of the three magnetic channels (Bx, By, Bz), the Wake Up function has a lower and an upper threshold. The thresholds have a resolution of 10 bits, corresponding to the 10 MSB of the magnetic measurement results Bx, By and Bz.

The magnetic measurement results of Bx, By and Bz are compared to the corresponding lower and upper Wake Up thresholds. If one of the magnetic measurement results is above the upper or below the lower threshold, an interrupt pulse INTN is generated. If all magnetic measurement results are within the envelope of lower and upper Wake Up threshold, no interrupt pulse will be provided. See also Figure 9.

In the Wake Up mode the interrupt pulse INTN is always activated, independent of the interrupt configuration.

Each of the 3 Wake Up channels X, Y and Z can be disabled individually by configuring the upper Wake Up threshold to the maximum value and the lower Wake Up threshold to the minimum value. In this configuration no interrupt INTN is provided for the disabled channel.

The Wake Up mode is intended to be used together with the Low Power mode. Note that the collision avoidance also applies on the Wake Up interrupt pulse INTN.

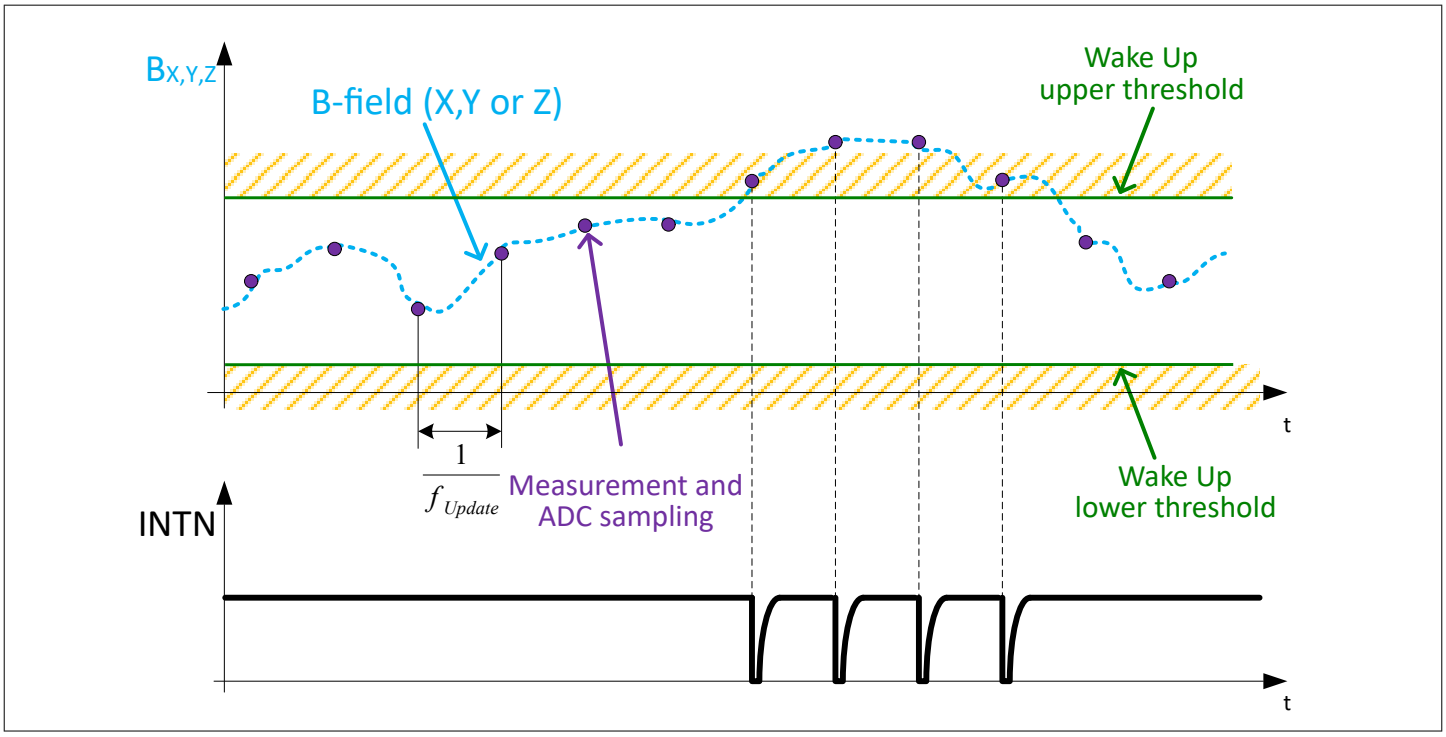

Figure 9 Wake Up threshold operation

The Wake Up function is activated when the following conditions are simultaneously met:

- Low Power mode must be activated
- wu_en or wu_en_cp must be set
- test functions must be disabled (channel_sel = 0000_B or 1100_B or 1101_B or 1110_B)
- Wake Up parity bit wu_par must be OK

4.3 Diagnosis

The sensor provides diagnostic functions. These functions are running in the background, providing results, which can be checked by the microcontroller for the verification of the measurement results.

The diagnosis flags are updated continuously.

Wake up parity bit and flag

A Wake Up parity check comprises all Wake Up registers of the sensor and the Wake Up parity bit (wu_par bit), which must be odd. The result of the parity check is indicated with a Wake Up parity flag wu_par_flg at the diagnosis readout. After a sensor reset or startup the Wake Up parity flag wu_par_flg is correct by default.

Measurement success flag

The diagnosis meas_flg shows that all read out measurement values including the frame counter belong to the same measurement or test function cycle and that during the cycle no shift between measurement and test function occurred.

Test function flag

The test function test_flg indicates if the registers Bx, By, Bz and Temp contain measurement or test data.

Frame counter

A two bit frame counter frame_counter is incremented at every finished measurement, as configured by CHANNEL_SEL, once a complete ADC conversion cycle is finished and the new measurement results have been stored in the registers 00_H to 07_H.

CRC

Used CRC polynomial:

- 8 bit
- $2F_H = x^8+x^5+x^3+x^2+x+1$
- Start value = 00_H

Readout from the sensor to the microcontroller:

- The measurement data, diagnosis information and configuration are used to calculate the CRC-byte by the sensor.
- This function is always active.

The crc_wr_flg indicates if data with correct CRC has been received by the sensor when the CRC at write is enabled.

- Relevant for the CRC calculation are all bytes in the communication frame excluding the last byte which is the CRC computed by the microcontroller.
- By default this function is disabled. It can be enabled with the crc_wr_en configuration bit.
- If a write command disables the CRC at write, the CRC calculation for this and further write commands is not executed.
- Independent from the crc_wr_flg the transmitted data are executed immediately by the sensor.
- The CRC at write configuration bit is not CRC write protected. The CRC at write configuration can be checked by reading the crc_wr_flg.
- The structure of the write command differs, dependent on the CRC at write configuration bit. See the write command description.

Loss of GND

This sensor has no capability to detect a loss of GND, neither any capability to handle this issue.

4.4 Test functions

Test functions are only executed by the sensor following a request by the microcontroller. The test functions provide test values instead of measurement values, which can be used to check if the sensor is working properly.

The test functions can be executed in the Master Controlled Mode and Low Power Mode. To activate a test function the channel_sel bits must be configured accordingly.

All reference values generated during module production test must be measured within $T_{ref\text{-}ambient}$.

Table 17 Calibration temperature

Parameter	Symbol	Values			Unit	Note or condition
		Min.	Typ.	Max.		
Calibration temperature	$T_{ref\text{-}ambient}$	10	-	40	°C	E.g. module production test

4.4.1 Vhall bias/Vext test function

This test checks the signal path, the Hall devices bias voltage and the external supply voltage.

Instead of measuring the Hall voltages on the probe (which depend on the external magnetic field), the Hall probes bias voltage is measured. Instead of measuring the temperature the external supply voltage, applied via the VDD-pin, is measured.

As the Hall bias voltage and the external supply voltage are known, any unexpected result would detect a malfunctioning of the internal Hall biasing or the signal path.

This test should be executed in module production test first. The values generated in this first test should be compared, if inside the limits listed in Table 18 and stored on module level. During module life time this stored values should be compared with additional life time test results and the system must check, if the values are inside the limits listed in Table 18.

The test is performed as described below:

- Set the channel_sel field according to Vhall bias/Vext test.
- Trigger a new measurement.
- When the measurement is completed, read the value of the registers Bx, By, Bz and Temp.

Vhall bias test:

- Check that the registers Bx, By and Bz have values inside the limits of Table 18.
- Testing one voltage reference (V_{DD}) is sufficient to cover the Vhall bias test.

Vext test:

- Make the microcontroller aware of the VDD-pin voltage.
- Check that the Vext value corresponds to the values listed in Table 18.

After the test:

- Continue with another test or leave the test function by setting the channel_sel field accordingly.

Timing:

- t_{ADC} for this test is the full range timing (full-, short-, extra short range), independent from the range settings plus the communication timing.

Table 18 Vhall bias / Vext diagnostic limits

Diagnostic test	Module production test Checked and stored for product life time				Temperature and lifetime drift of stored product values		
	Unit	min.	typ.	max.	Unit	min.	max.
Vhall bias X, Y @ 2.8 V to 5.5 V	LSB_{14}	2950	–	3950	%	-12	12
Vhall bias Z @ 2.8 V to 5.5 V	LSB_{14}	2200	–	4650	%	-14	14
Vext @ 3.3 V	LSB_{14}	3100	–	3750	%	-24	13
Vext @ 3.3 V and $T_j \leq 125°C$	LSB_{14}	3100	–	3750	%	-9	9
Vext gain @ 2.8 V to 5.5 V	LSB_{14}/V	935	–	1160	%	-9	9

The test limits are different for production and life time. Both is shown in Table 18 and illustrated in Figure 10.

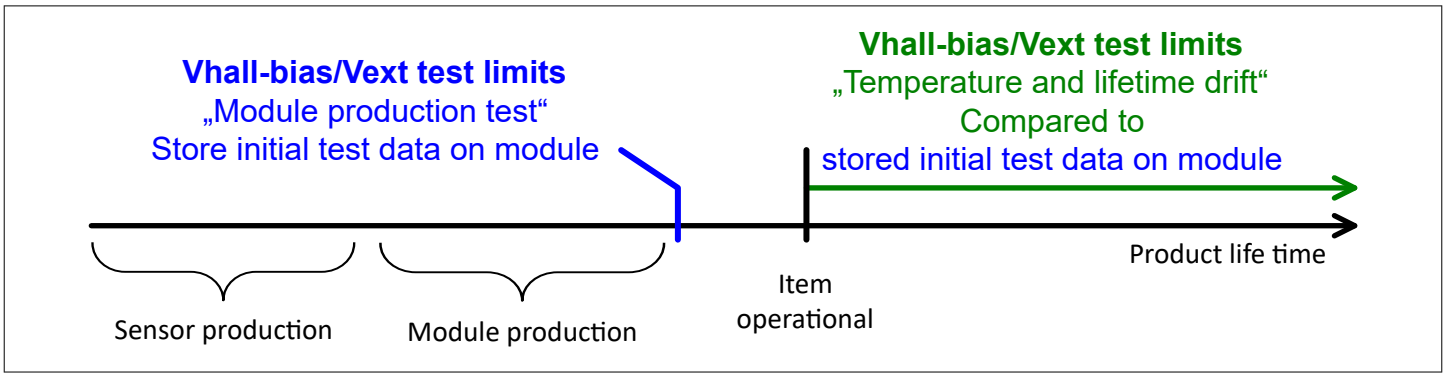

Figure 10 Vhall bias/Vext diagnostic limits vs. lifetime

4.4.2 Spintest/Vint test function

This test checks the correct spinning (also known as chopping) of all four phases of a Hall probe for the three channels Bx, By and Bz of the sensor and provides a measurement for the Hall probes and ADC offset. Instead of measuring the temperature the internal regulator supply (Vint) is measured.

In a magnetic measurement run, the result of the four spinning phases is:

$$(V_H + V_{Oh} + V_{Oa}) + (V_H - V_{Oh} - V_{Oa}) + (V_H - V_{Oh} - V_{Oa}) + (V_H + V_{Oh} + V_{Oa}) = 4 \cdot V_H$$

Equation 5

- V_H is the voltage at the Hall probes
- V_{Oh} is the voltage offset at the Hall probes
- V_{Oa} is the voltage offset at the ADC

By spinning the measurement four times at the Hall probes, the Hall offset and the ADC offset are eliminated in magnetic measurements. The Spintest can be used to measure the sum of the Hall probes offset and ADC offset. In a Spintest measurement run the result is:

$$(V_H + V_{Oh} + V_{Oa}) - (V_H - V_{Oh} - V_{Oa}) - (V_H - V_{Oh} - V_{Oa}) + (V_H + V_{Oh} + V_{Oa}) = 4 \cdot V_{Oh} + 4 \cdot V_{Oa} = 4 \cdot (V_{Oh} + V_{Oa})$$

Equation 6

The Spintest duration on one channel is the same as the duration of a full range measurement on that channel, independent if full-, short- or extra short range is configured.

The test is performed as described below:

- Set the channel_sel registers according to Spintest/Vint test.
- Trigger a new measurement.
- When the measurement is completed, read the value of the registers Bx, By, Bz and Temp.

Spintest:
- Check that Bx, By and Bz have values inside the limits of Table 19.

Vint test:
- Check that the Vint value read from Temp corresponds to the values listed in Table 19.

After the test:
- Continue with another test or leave the test mode by setting the channel_sel field accordingly.

Timing:
- t_{ADC} for this test is the full range timing (full-, short-, extra short range), independent from the range settings plus the communication timing.

The test limits are different for production and life time. Both is shown in Table 19 and illustrated in Figure 11. The spintest should be executed during the module production test first. The offset values generated in the first test should be compared to make sure that they are inside the limits specified in Table 19, section "Module production test" and stored on module level. During module lifetime these stored values must be compared in an additional Spintest to check if the values are inside the limits listed in Table 19, section "Temperature and lifetime drift".

Table 19 Spintest/Vint test diagnostic limits

Diagnostic test	Module production test Check and store for product life time				Temperature and lifetime drift of stored product values		
	Unit	min.	typ.	max.	Unit	min.	max.
Spintest X, Y @ 2.8 V to 5.5 V	LSB_{14}	-4120	–	3240	LSB_{14}	-2605	2605
Spintest Z @ 2.8 V to 5.5 V	LSB_{14}	-2800	–	2650	LSB_{14}	-1260	1260
Vint @ 2.8 V to 5.5 V	LSB_{14}	4100	–	5400	%	-9	9

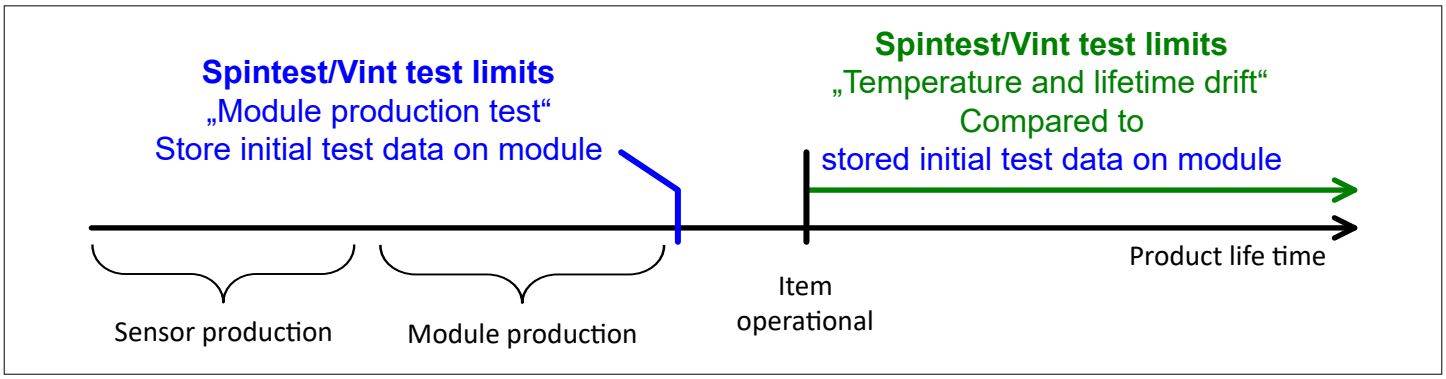

Figure 11 Spintest/Vint test diagnostic limits vs. lifetime

4.4.3 SAT test function

This test checks the whole digital signal path from sensor to microcontroller. This includes the ADC's digital core, the data register and the interface.

This test checks the Successive Approximation and Tracking (SAT) mechanism used for the four spin phases of each data channel (Hall probes and temperature sensor).

The test is performed as described below:

- Set the channel_sel field according to SAT test.
- Select one combination f_update_sel and short_en and xtr_short_en. Please note: One combination is sufficient for a valid SAT-test.
- Trigger a new measurement.
- Read the values of Bx, By, Bz and Temp and compare if they correspond with the values listed in Table 20.

After the test:

- Continue with another test or leave the test mode by setting the channel_sel field accordingly.

Timing:

- t_{ADC} for this test depends on the range timing (full-, short-, extra short range), dependent from the range settings plus the communication timing.

Table 20 SAT test reference values

f_update_sel	short_en	xtr_short_en	Bx[14b]	By[14b]	Bz[14b]	Temp[14b]
00_B	0_B	0_B	$1FE6_H$	$201A_H$	$1FFD_H$	2002_H
01_B	0_B	0_B	$201A_H$	$1FE6_H$	2002_H	$1FFD_H$
10_B	0_B	0_B	$1FFD_H$	2002_H	$1FE6_H$	$201A_H$
11_B	0_B	0_B	2002_H	$1FFD_H$	$201A_H$	$1FE6_H$
00_B	1_B	0_B	$1FFF_H$	2000_H	$1FFF_H$	2002_H
01_B	1_B	0_B	2000_H	$1FFF_H$	2000_H	$1FFD_H$
10_B	1_B	0_B	$1FFF_H$	2000_H	$1FFF_H$	$201A_H$
11_B	1_B	0_B	2000_H	$1FFF_H$	2000_H	$1FE6_H$
00_B	Don't care	1_B	$3ED8_H$	0128_H	$3FF7_H$	2002_H
01_B	Don't care	1_B	0128_H	$3ED8_H$	0008_H	$1FFD_H$
10_B	Don't care	1_B	$3FF7_H$	0008_H	$3ED8_H$	$201A_H$
11_B	Don't care	1_B	0008_H	$3FF7_H$	0128_H	$1FE6_H$

4.5 Trigger options in the Master Controlled Mode

The trigger option 01_B allows to trigger the ADC before reading the first data byte.
The trigger options 10_B or 11_B allow to trigger the ADC at the CSN rising edge.
The trigger option 00_B disables the ADC trigger.

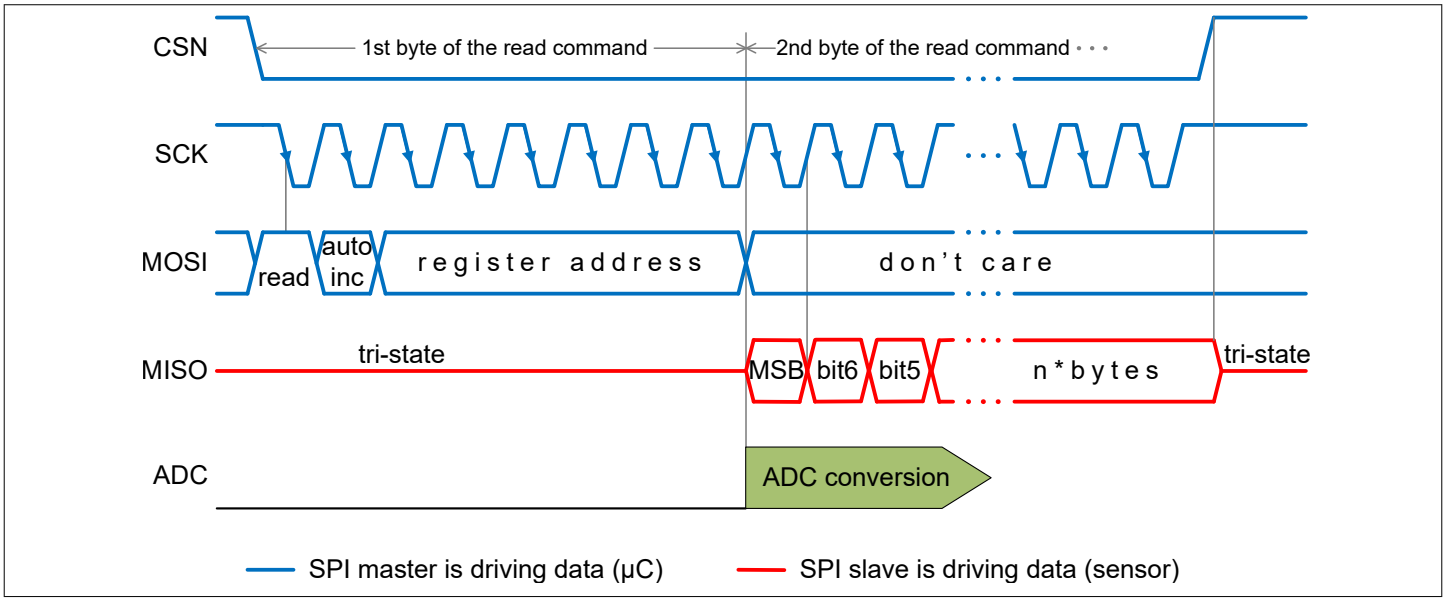

Figure 12 **ADC trigger before reading data**

5 Functional Block Description

This sensor is a configurable sensor, intended for a very good adaptation to different applications. This requires a bidirectional communication interface.

5.1 SPI interface

The SPI interface has the main functions:

- Sensor configuration
- Transmit measurement data
- Diagnosis and test

The read frame provides the option of automatic incrementation of the register address beyond CSN frames in the designated register address range.

Daisy chaining the SPI is not possible.

The product has a 8 bit Serial Peripheral Interface (SPI) - compatible with integer multiples of 8 bit (16, 24, 32, 64, ... bit).

The SPI interface can be accessed in any power mode, after t_{res_trig} expired.

The SPI mode 2 is supported:

The Clock Polarity CPOL is 1_B, where the idle state of the clock is high (1_B) and the active state is low (0_B).

The Clock Phase CPHA is 0_B, where the data are sampled on the falling edge.

5.1.1 SPI protocol description

The data transmission order is most significant bit (MSB) first, least significant bit (LSB) last.

5.1.1.1 SPI write command

Write SPI communication description:

- The register address identifies the register in the bitmap with which the first data byte will be written.
- Data bytes are transmitted as long as the SCK line generates pulses while CSN = "low". Each additional data byte increments the register address until the rising edge of CSN.
- The input data are executed in the sensor after each data byte, see Figure 13.
- Bytes transmitted beyond the addressable register range are ignored.

Write command without CRC

The SPI write communication frame with disabled CRC consists of:

- CSN falling edge
- Write command bit = "low" (read = "high")
- Don't care bit
- The register address
- Write the data bytes to the sensor
- CSN rising edge

See Figure 13

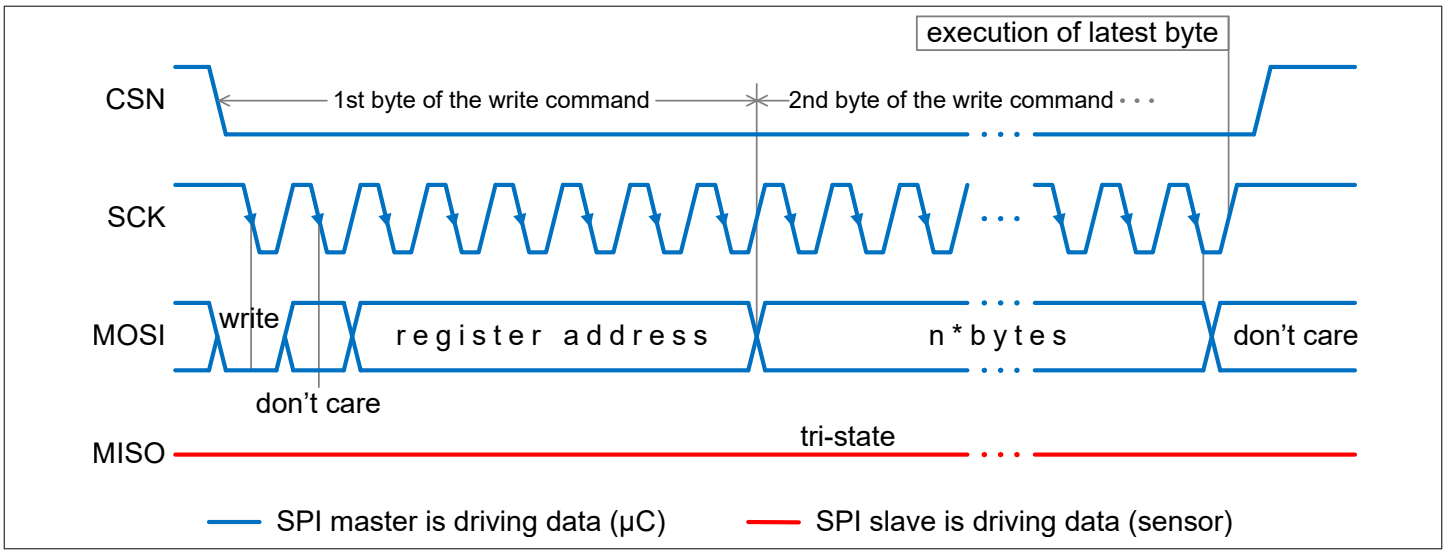

Figure 13 **Write frame format: Write data from microcontroller to sensor**

Write command with CRC

The SPI write communication frame with enabled CRC consists of:

- CSN falling edge
- Write command bit = "low" (read = "high")
- Don't care bit
- The register address
- The number of data bytes to be transmitted in this CSN frame
- Write the number of data bytes to the sensor, quantified in this CSN frame
- The CRC byte
- CSN rising edge

See Figure 14

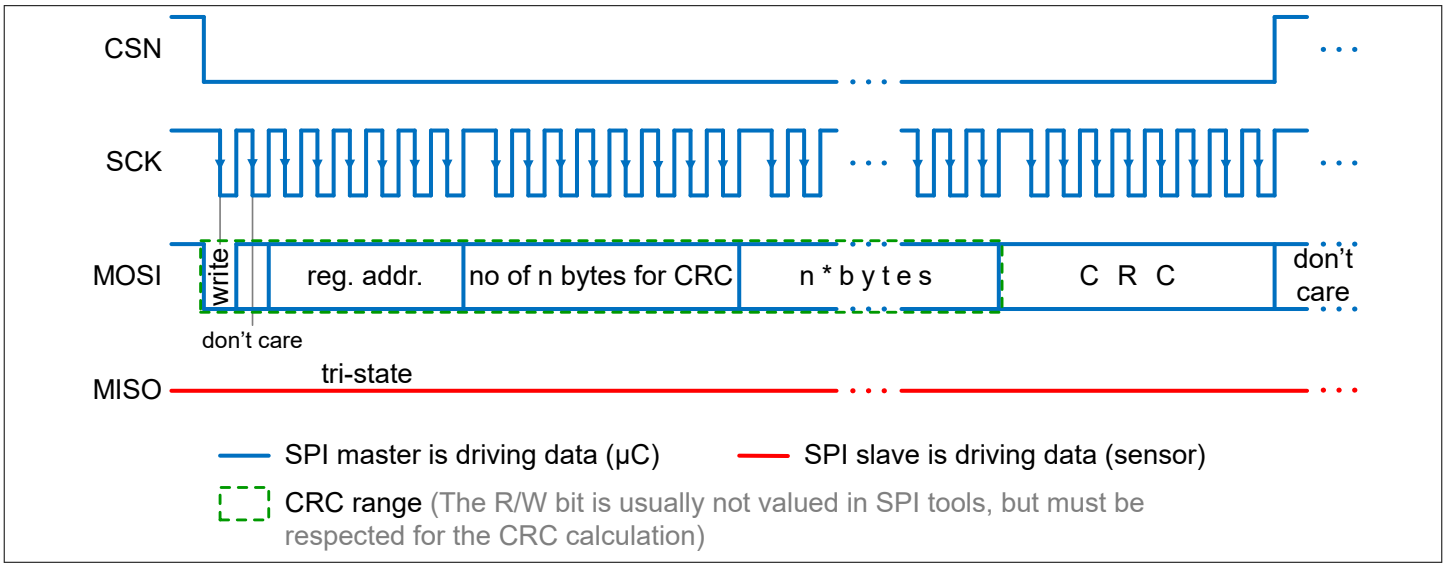

Figure 14 **Write command with CRC: Write data from microcontroller to sensor**

5.1.1.2 SPI read commands

Read SPI communication description:

- The auto-inc bit offers the option of automatic incrementation of the register address beyond CSN frames in the designated register address range. Special care must be taken for the timing capabilities of the microcontroller, e.g. "SPI auto inc MISO enable time".
- The register address identifies the register in the bitmap from which the first data byte will be read.
- As many data bytes are transmitted as long as the SCK line generates pulses while CSN = "low". Each additional data byte increments the register address until the rising edge of CSN.
- When the master continues the read command beyond the addressable register range the sensor keeps the MISO in tri-state (high impedance).

Read command without auto-inc

The SPI read communication frame consists of:

- CSN falling edge
- Read command bit = "high" (write = "low")
- Auto inc bit = "low"
- The register address
- Reading of one or several bytes from the sensor.
- CSN rising edge
- With CSN = "high" the SPI is reset and with the next falling CSN edge this read command frame must be used.

See Figure 15 and Figure 16

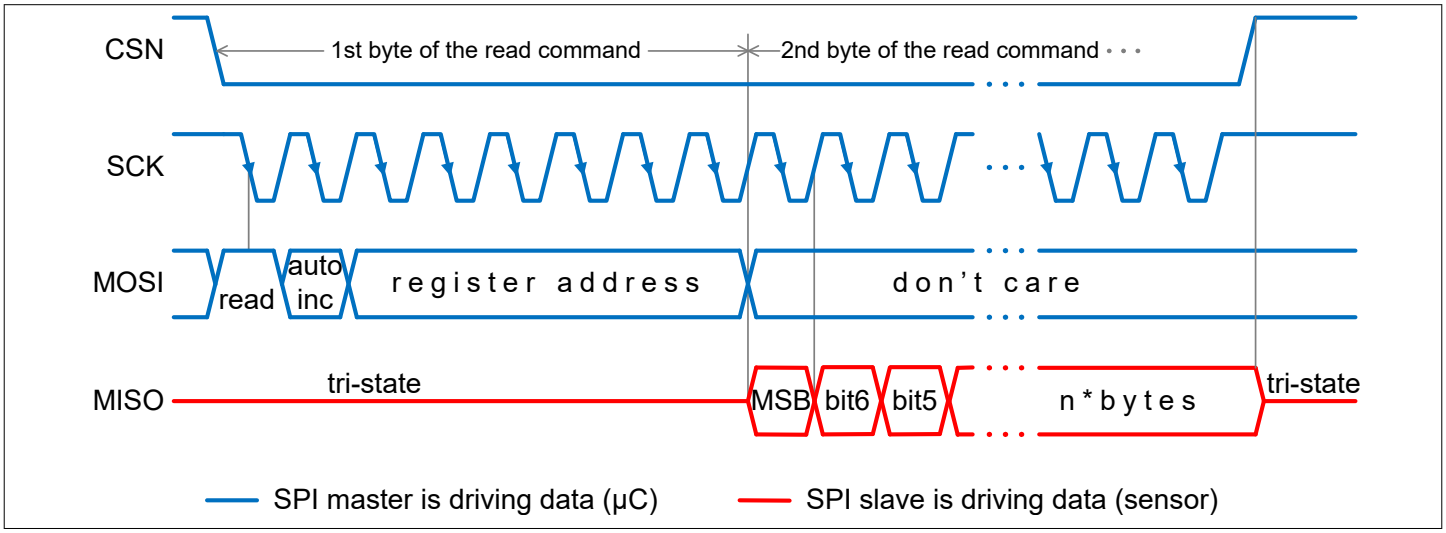

Figure 15 **Read frame format: Read data from sensor to microcontroller**

Read command with auto-inc

The SPI read communication frame consists of:

- CSN falling edge
- Read command bit = "high" (write = "low")
- Auto inc bit = "high"
- The register address
- Reading of one or several bytes from the sensor.
- CSN rising edge

- With CSN = "high" and if the next read register is within the designated register address range the SPI is not reset and with the next falling CSN edge the read out register address is further incremented. The register address byte is not needed and the data read out can proceed.
- Else with CSN = "high" the SPI is reset and with the next falling CSN edge the register address byte must be used to send a new read/write command.

See Figure 17 and Figure 18

The bitmap register range, designated for read with automatic incrementation (auto-inc) is defined for the register addresses 00_H to 09_H, according the Figure 20.

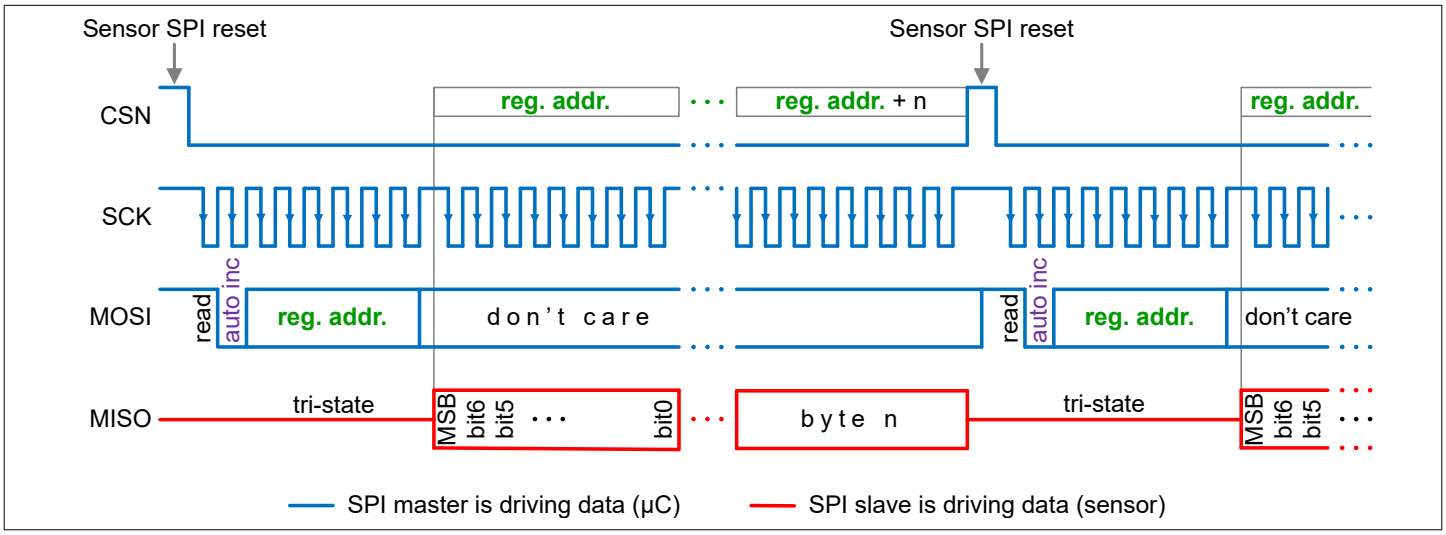

Figure 16 **Reading with disabled auto-incrementation: No automatic register address incrementation**

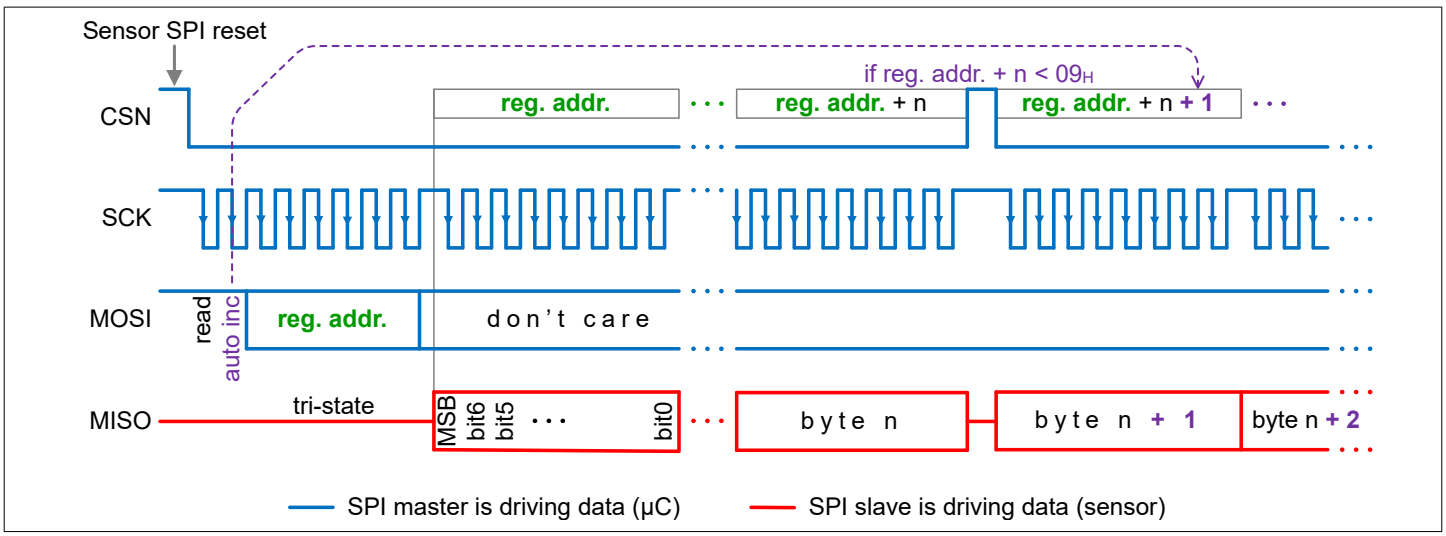

Figure 17 **Reading with enabled auto-incrementation inside designated register address range: Incrementation active**

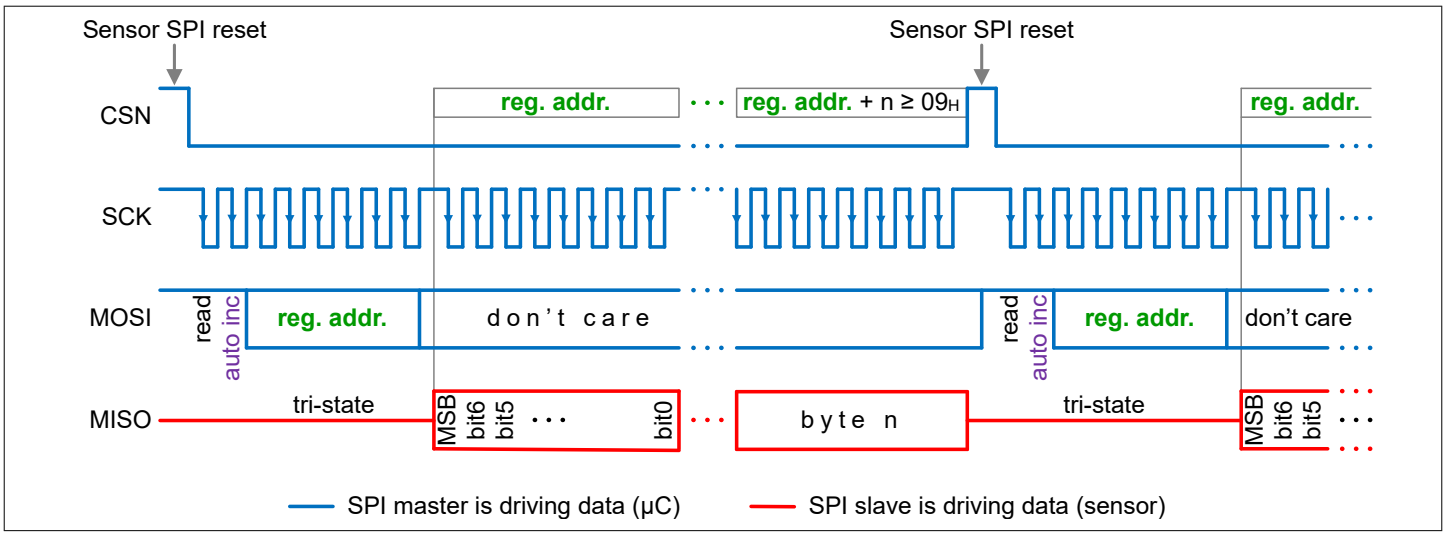

Figure 18 **Reading with enabled auto-incrementation outside designated register address range: Incrementation abolished**

5.1.1.3 SPI timing characteristics

Table 21 **SPI timing characteristics**

Parameter	Symbol	Values			Unit	Note or condition
		Min.	Typ.	Max.		
SPI SCK frequency	f_{SCK}	0.1	–	2	MHz	For details please refer to Figure 19 and see the Application Circuit
SPI SCK high time	t_{SCK_high}	225	–	–	ns	
SPI SCK low time	t_{SCK_low}	225	–	–	ns	
SPI CSN enable lag time	t_{CSN_lag}	500	–	–	ns	
SPI CSN enable lead time	t_{CSN_lead}	500	–	–	ns	
SPI sequential transfer delay time	t_{CSN_td}	500	–	–	ns	
SPI MOSI data setup time	t_{MOSI_setup}	100	–	–	ns	MOSI transition to falling SCK
SPI MOSI data hold time	t_{MOSI_hold}	0	–	–	ns	
SPI auto inc MISO enable time	t_{MISO_enable}	–	–	1	µs	
SPI MISO disable time	$t_{MISO_disable}$	–	–	350	ns	
SPI MISO data valid time	t_{MISO_valid}	–	–	250	ns	
SPI SCK high to CSN low delay	t_{sclh}	250	–	–	ns	
SPI hold time on SCLK after CSN	$t_{disablelag}$	250	–	–	ns	

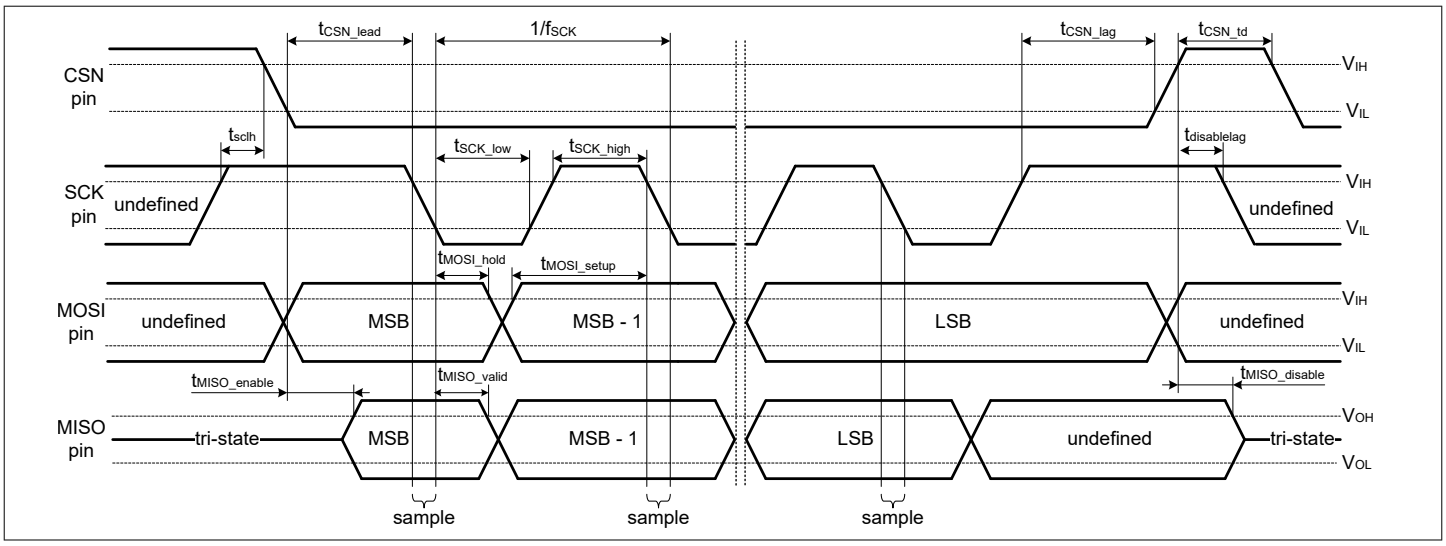

Figure 19 SPI timing diagram

5.2 Registers

The sensor includes several registers that can be accessed via the interface to read data as well as to write and configure settings.

5.2.1 Registers overview

The bitmap illustrates the registers and bits with the corresponding addresses.

Read skip @			7	6	5	4	3	2	1	0
channel_sel = 1110_B	bx_msb	00_H	bx_msbs (r)							
	bx_lsb	01_H	0	0	bx_lsbs (r)					
channel_sel = 1110_B or = 1100_B	by_msb	02_H	by_msbs (r)							
	by_lsb	03_H	0	0	by_lsbs (r)					
channel_sel = 1100_B or = 1101_B	bz_msb	04_H	bz_msbs (r)							
	bz_lsb	05_H	0	0	bz_lsbs (r)					
channel_sel = 1101_B	temp_msb	06_H	temp_msbs (r)							
	temp_lsb	07_H	0	0	temp_lsbs (r)					
	crc	08_H	crc (r)							
	diag	09_H	meas_flg (r)	test_flg (r)	frame_counter (r)		rst_flg (r)	wu_par_flg (r)	crc_wr_flg (r)	fuse_par_flg (r)
	mod1	$0A_H$	mode_sel (rw)	int_dis (rw)	1	wu_en (rw)	trigger_sel (rw)		1	crc_wr_en (rw)
	mod2	$0B_H$	channel_sel (rw)				f_update_sel (rw)		xtr_short_en (rw)	short_en (rw)
	wu_xh	$0C_H$	wu_xh_msbs (rw)							
	wu_xl	$0D_H$	wu_xl_msbs (rw)							
	wu_yh	$0E_H$	wu_yh_msbs (rw)							
	wu_yl	$0F_H$	wu_yl_msbs (rw)							
	wu_zh	10_H	wu_zh_msbs (rw)							
	wu_zl	11_H	wu_zl_msbs (rw)							
	wu_xy	12_H	wu_xh_lsbs (rw)		wu_xl_lsbs (rw)		wu_yh_lsbs (rw)		wu_yl_lsbs (rw)	
	wu_z	13_H			wu_par (rw)	wu_en_cp (w)	wu_zh_lsbs (rw)		wu_zl_lsbs (rw)	
	rst	14_H							rst_flg_clr (w)	soft_rst (w)
	id0	15_H	chip_id_0 (r)							
	id1	16_H	chip_id_1 (r)							
	id2	17_H	chip_id_2 (r)							
	id3	18_H	chip_id_3 (r)							
	id4	19_H	chip_id_4 (r)							
	id5	$1A_H$	0	id_par (r)		chip_id_5 (r)				

Magnetic values | Temperature values | Diagnosis | Configuration | Spare bits, must not be used
Wake Up values | Wake Up parity range | Chip ID | Chip ID parity range | Reset | CRC range

Figure 20 Bitmap

5.2.2 Register descriptions

The registers can be read or written at any time.

It is recommended to read measurement data in a synchronized fashion, i.e. after an interrupt pulse (INTN). This avoids reading inconsistent sensor or diagnostic data. Additionally, several flags can be used for a plausibility check of the read out data.

Bit types

The sensor contains read bits and write bits.

Table 22 Bit Types

Abbreviation	Function	Description
r	Read	Read-only bits
w	Write	Write-only bits
rw	Read Write	Readable and writable bit

5.2.2.1 Magnetic X-value MSBs register

bx_msb Offset address: 0_H

Magnetic X-value MSBs register Reset value: 80_H

7	6	5	4	3	2	1	0
bx_msbs							
r							

Field	Bits	Type	Description
bx_msbs	7:0	r	**bx_msbs** Raw magnetic measurement result in the X direction (signed two's complement notation). Contains the 8 Most Signficant Bits out of the 14b value. If Bx is deactivated, bx_msbs value is set to reset value.

5.2.2.2 Magnetic X-value LSBs register

bx_lsb Offset address: 1_H

Magnetic X-value LSBs register Reset value: 00_H

7	6	5	4	3	2	1	0
Res		**bx_lsbs**					
r		r					

Field	Bits	Type	Description
bx_lsbs	5:0	r	**bx_lsbs** Raw magnetic measurement result in the X direction (signed two's complement notation). Contains the 6 Least Signficant Bits out of the 14b value. If Bx is deactivated, bx_lsbs value is set to reset value.

5.2.2.3 Magnetic Y-value MSBs register

by_msb Offset address: 2_H

Magnetic Y-value MSBs register Reset value: 80_H

7	6	5	4	3	2	1	0
by_msbs							
r							

Field	Bits	Type	Description
by_msbs	7:0	r	**by_msbs** Raw magnetic measurement result in the Y direction (signed two's complement notation). Contains the 8 Most Signficant Bits out of the 14b value. If By is deactivated, by_msbs value is set to reset value.

5.2.2.4 Magnetic Y-value LSBs register

by_lsb Offset address: 3_H

Magnetic Y-value LSBs register Reset value: 00_H

7	6	5	4	3	2	1	0
Res		**by_lsbs**					
r		r					

Field	Bits	Type	Description
by_lsbs	5:0	r	**by_lsbs** Raw magnetic measurement result in the Y direction (signed two's complement notation). Contains the 6 Least Signficant Bits out of the 14b value. If By is deactivated, by_lsbs value is set to reset value.

5.2.2.5 Magnetic Z-value MSBs register

bz_msb Offset address: 4_H

Magnetic Z-value MSBs register Reset value: 80_H

7	6	5	4	3	2	1	0
bz_msbs							
r							

Field	Bits	Type	Description
bz_msbs	7:0	r	**bz_msbs** Raw magnetic measurement result in the Z direction (signed two's complement notation). Contains the 8 Most Signficant Bits out of the 14b value. If Bz is deactivated, bz_msbs value is set to reset value.

5.2.2.6 Magnetic Z-value LSBs register

bz_lsb Offset address: 5_H

Magnetic Z-value LSBs register Reset value: 00_H

7	6	5	4	3	2	1	0
Res		**bz_lsbs**					
r		r					

Field	Bits	Type	Description
bz_lsbs	5:0	r	**bz_lsbs** Raw magnetic measurement result in the Z direction (signed two's complement notation). Contains the 6 Least Signficant Bits out of the 14b value. If Bz is deactivated, bz_lsbs value is set to reset value.

5.2.2.7 Temperature value MSBs register

temp_msb Offset address: 6_H

Temperature value MSBs register Reset value: 80_H

7	6	5	4	3	2	1	0
temp_msbs							
r							

Field	Bits	Type	Description
temp_msbs	7:0	r	**temp_msbs** Raw temperature measurement result (signed two's complement notation). Contains the 8 Most Significant Bits out of the 14b value. If the temperature measurement is deactivated, temp_msbs value is set to reset value.

5.2.2.8 Temperature value LSBs register

temp_lsb Offset address: 7_H

Temperature value LSBs register Reset value: 00_H

7	6	5	4	3	2	1	0
Res		**temp_lsbs**					
r		r					

Field	Bits	Type	Description
temp_lsbs	5:0	r	**temp_lsbs** Raw temperature measurement result (signed two's complement notation). Contains the 6 Least Significant Bits out of the 14b value. If the temperature measurement is deactivated, temp_lsbs value is set to reset value.

5.2.2.9 Communication CRC

CRC Offset address: 8_H

Communication CRC Reset value: 00_H

7	6	5	4	3	2	1	0
CRC							
r							

Field	Bits	Type	Description
CRC	7:0	r	**Communication CRC** Provided for all read communications. Included registers are defined in the bitmap, without the registers excluded according to channel_sel.

5.2.2.10 Diagnosis register

diag Offset address: 9_H

Diagnosis register Reset value: $0C_H$

7	6	5	4	3	2	1	0
meas_flg	**test_flg**	**frame_counter**		**rst_flg**	**wu_par_flg**	**crc_wr_flg**	**fuse_par_flg**
r	r	r		r	r	r	r

Field	Bits	Type	Description
fuse_par_flg	0	r	**Fuse Parity Flag** Flag reflecting the result of fuse parity check for fuses related to internal trimming. 0_B: Fuse parity check is not correct for trimming bits. When fuse parity check is not correct, the output of the sensor must be considered corrupted. The external user can attempt to see if this error disappears after a soft reset. If the error persists, the device can no longer be used. 1_B: Fuse parity check is correct
crc_wr_flg	1	r	**CRC Write OK Flag** crc_wr_flg is cleared with the next write command. 0_B: The CRC at write is enabled and incorrect CRC has been transmitted or the CRC at write is disabled. 1_B: The CRC at write is enabled and correct CRC has been transmitted.
wu_par_flg	2	r	**Wake Up Parity Flag** 0_B: Wake Up parity check is not correct. The sensor does not enter Wake Up mode. 1_B: Wake Up parity check is correct. The sensor can enter Wake Up mode.

(table continues...)

(continued)

Field	Bits	Type	Description
rst_flg	3	r	**Reset Flag** Indicates a sensor reset. The field is cleared when 1_B is written to the rst_flg_clr field. 0_B: No sensor reset event. 1_B: Sensor reset event occurred.
frame_counter	5:4	r	**Frame Counter** Increments at every ADC conversion cycle.
test_flg	6	r	**Test Function Flag** 0_B: The registers contain measurement data. 1_B: The registers contain test function data.
meas_flg	7	r	**Measure Success Flag** 1_B: All read out measurement values belong to the same ADC conversion cycle and were performed with the same channel_sel setting. 0_B: The read out measurement values either belong to different ADC conversion cycle or to different channel_sel settings.

5.2.2.11 Sensor mode register 1

mod1 Offset address: $0A_H$

Sensor mode register 1 Reset value: 62_H

7	6	5	4	3	2	1	0
mode_sel	**int_dis**	**Res**	**wu_en**	**trigger_sel**		**Res**	**crc_wr_en**
rw	rw	r	rw	rw		r	rw

Field	Bits	Type	Description
crc_wr_en	0	rw	**CRC enable for write operations.** 0_B: CRC for write operations is disabled. 1_B: CRC for write operations is enabled.
trigger_sel	3:2	rw	**Trigger options** Available trigger modes: 00_B: no trigger 01_B: trigger on read $1x_B$: trigger on stop condition
wu_en	4	rw	**Wake Up** 0_B: the Wake Up functionality is disabled. 1_B: the Wake Up functionality is enabled. If enabled, the Wake Up functionality is only active if: - Wake Up parity flag is OK. - test functions are disabled.

(table continues...)

(continued)

Field	Bits	Type	Description
int_dis	6	rw	**Interrupt disable** When Wake Up is enabled, the interrupt functionality is always activated, independent of the int_dis configuration. 0_B: Interrupt enabled: After a completed measurement and ADC conversion cycle, an interrupt pulse will be generated (see also Wake Up functionality). 1_B: Interrupt disabled
mode_sel	7	rw	**Operating modes** 0_B: Low Power Mode: Cyclic measurements and ADC-conversions with an update rate defined in the f_update_sel register. The trigger configuration is ignored. 1_B: Master Controlled Mode: Measurements are triggered by microcontroller. The trigger is configured via the trigger_sel bits.

5.2.2.12 Sensor mode register 2

mod2 Offset address: $0B_H$

Sensor mode register 2 Reset value: 00_H

7	6	5	4	3	2	1	0
channel_sel				**f_update_sel**		**xtr_short_en**	**short_en**
rw				rw		rw	rw

Field	Bits	Type	Description
short_en	0	rw	**Magnetic short-range measurement** 0_B: The Bx, By and Bz ADC-conversion is set according the full range specification. 1_B: The Bx, By and Bz ADC-conversion is set according the short range specification. short_en = 1_B and xtr_short_en = 1_B must not be used.
xtr_short_en	1	rw	**Magnetic extra short-range measurement** 0_B: The Bx, By and Bz ADC-conversion is set according the short_en setting. 1_B: The Bx, By and Bz ADC-conversion is set according the extra short range specification and short_en is ignorred. short_en = 1_B and xtr_short_en = 1_B must not be used.
f_update_sel	3:2	rw	**Update frequency for low power mode** 00_B: 1000 Hz 01_B: 125 Hz 10_B: 31 Hz 11_B: 16 Hz

(table continues...)

(continued)

Field	Bits	Type	Description
channel_sel	7:4	rw	**Channel selection** Selection of measurement channels and test function. When a readout is performed, the addresses corresponding to measurement registers for which a measurement is not performed are skipped. Register addresses, not included in the measurement are not covered by CRC at read. When one channel is disabled, for all new measurements the register value for that channel will be set to reset value. 0000_B: Bx, By, Bz, Temp 0001_B: Vhall bias (X, Y, Z) / Vext test function. 0010_B: Spintest (X, Y, Z) / Vint test function. 1000_B: SAT test function (X, Y, Z, Temp). 1100_B: Bx, Temp 1101_B: Bx, By 1110_B: Bz, Temp (SPI read register address must be set to 04_H)

5.2.2.13 Wake Up X-high threshold MSBs register

wu_xh Offset address: $0C_H$

Wake Up X-high threshold MSBs register Reset value: $7F_H$

7	6	5	4	3	2	1	0
wu_xh_msbs							
rw							

Field	Bits	Type	Description
wu_xh_msbs	7:0	rw	**Wake Up X-high MSBs** Defines the Wake Up upper threshold for the Bx magnetic channel above which the sensor enables INTN.

5.2.2.14 Wake Up X-low threshold MSBs register

wu_xl Offset address: $0D_H$

Wake Up X-low threshold MSBs register Reset value: 80_H

7	6	5	4	3	2	1	0
wu_xl_msbs							
rw							

Field	Bits	Type	Description
wu_xl_msbs	7:0	rw	**Wake Up X-low MSBs** Defines the Wake Up lower threshold for the Bx magnetic channel below which the sensor enables INTN.

5.2.2.15 Wake Up Y-high threshold MSBs register

wu_yh Offset address: $0E_H$

Wake Up Y-high threshold MSBs register Reset value: $7F_H$

7	6	5	4	3	2	1	0
wu_yh_msbs							
rw							

Field	Bits	Type	Description
wu_yh_msbs	7:0	rw	**Wake Up Y-high MSBs** Defines the Wake Up upper threshold for the By magnetic channel above which the sensor enables INTN.

5.2.2.16 Wake Up Y-low threshold MSBs register

wu_yl Offset address: $0F_H$

Wake Up Y-low threshold MSBs register Reset value: 80_H

7	6	5	4	3	2	1	0
wu_yl_msbs							
rw							

Field	Bits	Type	Description
wu_yl_msbs	7:0	rw	**Wake Up Y-low MSBs** Defines the Wake Up lower threshold for the By magnetic channel below which the sensor enables INTN.

5.2.2.17 Wake Up Z-high threshold MSBs register

wu_zh Offset address: 10_H

Wake Up Z-high threshold MSBs register Reset value: $7F_H$

7	6	5	4	3	2	1	0
wu_zh_msbs							
rw							

Field	Bits	Type	Description
wu_zh_msbs	7:0	rw	**Wake Up Z-high MSBs** Defines the Wake Up upper threshold for the Bz magnetic channel above which the sensor enables INTN.

5.2.2.18 Wake Up Z-low threshold MSBs register

wu_zl Offset address: 11_H

Wake Up Z-low threshold MSBs register Reset value: 80_H

7	6	5	4	3	2	1	0
wu_zl_msbs							
rw							

Field	Bits	Type	Description
wu_zl_msbs	7:0	rw	**Wake Up Z-low MSBs** Defines the Wake Up lower threshold for the Bz magnetic channel below which the sensor enables INTN.

5.2.2.19 Wake Up XY thresholds LSBs register

wu_xy Offset address: 12_H

Wake Up XY thresholds LSBs register Reset value: CC_H

7	6	5	4	3	2	1	0
wu_xh_lsbs		**wu_xl_lsbs**		**wu_yh_lsbs**		**wu_yl_lsbs**	
rw		rw		rw		rw	

Field	Bits	Type	Description
wu_yl_lsbs	1:0	rw	**Wake Up Y-low LSBs** Defines the Wake Up lower threshold for the By magnetic channel below which the sensor enables INTN.
wu_yh_lsbs	3:2	rw	**Wake Up Y-high LSBs** Defines the Wake Up upper threshold for the By magnetic channel above which the sensor enables INTN.
wu_xl_lsbs	5:4	rw	**Wake Up X-low LSBs** Defines the Wake Up lower threshold for the Bx magnetic channel below which the sensor enables INTN.
wu_xh_lsbs	7:6	rw	**Wake Up X-high LSBs** Defines the Wake Up upper threshold for the Bx magnetic channel above which the sensor enables INTN.

5.2.2.20 Wake Up Z thresholds LSBs register

wu_z Offset address: 13_H

Wake Up Z thresholds LSBs register Reset value: $2C_H$

7	6	5	4	3	2	1	0
Res		**wu_par**	**wu_en_cp**	**wu_zh_lsbs**		**wu_zl_lsbs**	
r		rw	w	rw		rw	

Field	Bits	Type	Description
wu_zl_lsbs	1:0	rw	**Wake Up Z-low LSBs** Defines the Wake Up lower threshold for the Bz magnetic channel below which the sensor enables INTN.
wu_zh_lsbs	3:2	rw	**Wake Up Z-high LSBs** Defines the Wake Up upper threshold for the Bz magnetic channel above which the sensor enables INTN.
wu_en_cp	4	w	**Wake Up enable copy** Alternative enable/disable bit for Wake Up functionality. A read from this location always returns 0_B. Any write operation at this address takes effect in the wu_en bit. This is an alternative address for changing the state of wu_en configuration bit. This allows the user to have a single write stream with automatically incremented address that disables Wake Up functionality, updates the Wake Up thresholds and enables the Wake Up functionality. This is the recommended sequence when the user wants to dynamically change the Wake Up threshold in a safer manner while the feature was already enabled.
wu_par	5	rw	**Wake Up parity bit** Odd parity bit for Wake Up thresholds and wu_en configuration bits. This field is written by the user in accordance with configured Wake Up settings. This field will be compared with the sensor computed parity in order to generate the wu_par_flg flag.

5.2.2.21 Reset register

rst Offset address: 14_H

Reset register Reset value: 00_H

7	6	5	4	3	2	1	0
Res						**rst_flg_clr**	**soft_rst**
r						w	w

Field	Bits	Type	Description
soft_rst	0	w	**Soft Reset trigger bit** A soft reset is triggered when writing 1_B to this field. A read operation will always return 0_B for this field.
rst_flg_clr	1	w	**Sensor reset clear** Write 1_B to clear the rst_flg status bit from the diag register. A read operation will always return 0_B for this field.

5.2.2.22 Unique chip identifier register 0

id0 Offset address: 15_H

Unique chip identifier register 0 Reset value: XX_H

7	6	5	4	3	2	1	0
chip_id_0							
r							

Field	Bits	Type	Description
chip_id_0	7:0	r	**Chip identifier** Each individual chip is equipped with a unique chip identifier, comprising the register fields chip_id_0 to chip_id_5.

5.2.2.23 Unique chip identifier register 1

id1 Offset address: 16_H

Unique chip identifier register 1 Reset value: XX_H

7	6	5	4	3	2	1	0
chip_id_1							
r							

Field	Bits	Type	Description
chip_id_1	7:0	r	**Chip identifier** Each individual chip is equipped with a unique chip identifier, comprising the register fields chip_id_0 to chip_id_5.

5.2.2.24 Unique chip identifier register 2

id2 Offset address: 17_H

Unique chip identifier register 2 Reset value: XX_H

7	6	5	4	3	2	1	0
chip_id_2							
r							

Field	Bits	Type	Description
chip_id_2	7:0	r	**Chip identifier** Each individual chip is equipped with a unique chip identifier, comprising the register fields chip_id_0 to chip_id_5.

5.2.2.25 Unique chip identifier register 3

id3 Offset address: 18_H

Unique chip identifier register 3 Reset value: XX_H

7	6	5	4	3	2	1	0
chip_id_3							
r							

Field	Bits	Type	Description
chip_id_3	7:0	r	**Chip identifier** Each individual chip is equipped with a unique chip identifier, comprising the register fields chip_id_0 to chip_id_5.

5.2.2.26 Unique chip identifier register 4

id4 Offset address: 19_H

Unique chip identifier register 4 Reset value: XX_H

7	6	5	4	3	2	1	0
chip_id_4							
r							

Field	Bits	Type	Description
chip_id_4	7:0	r	**Chip identifier** Each individual chip is equipped with a unique chip identifier, comprising the register fields chip_id_0 to chip_id_5.

5.2.2.27 Unique chip identifier register 5

id5 Offset address: $1A_H$

Unique chip identifier register 5 Reset value: XX_H

7	6	5	4	3	2	1	0
Res	**id_par**	**chip_id_5**					
r	r	r					

Field	Bits	Type	Description
chip_id_5	5:0	r	**Chip identifier** Each individual chip is equipped with a unique chip identifier, comprising the register fields chip_id_0 to chip_id_5.
id_par	6	r	**Chip identifier fuse parity bit** Fuse bit storing odd parity for chip ID.

6 Application Information

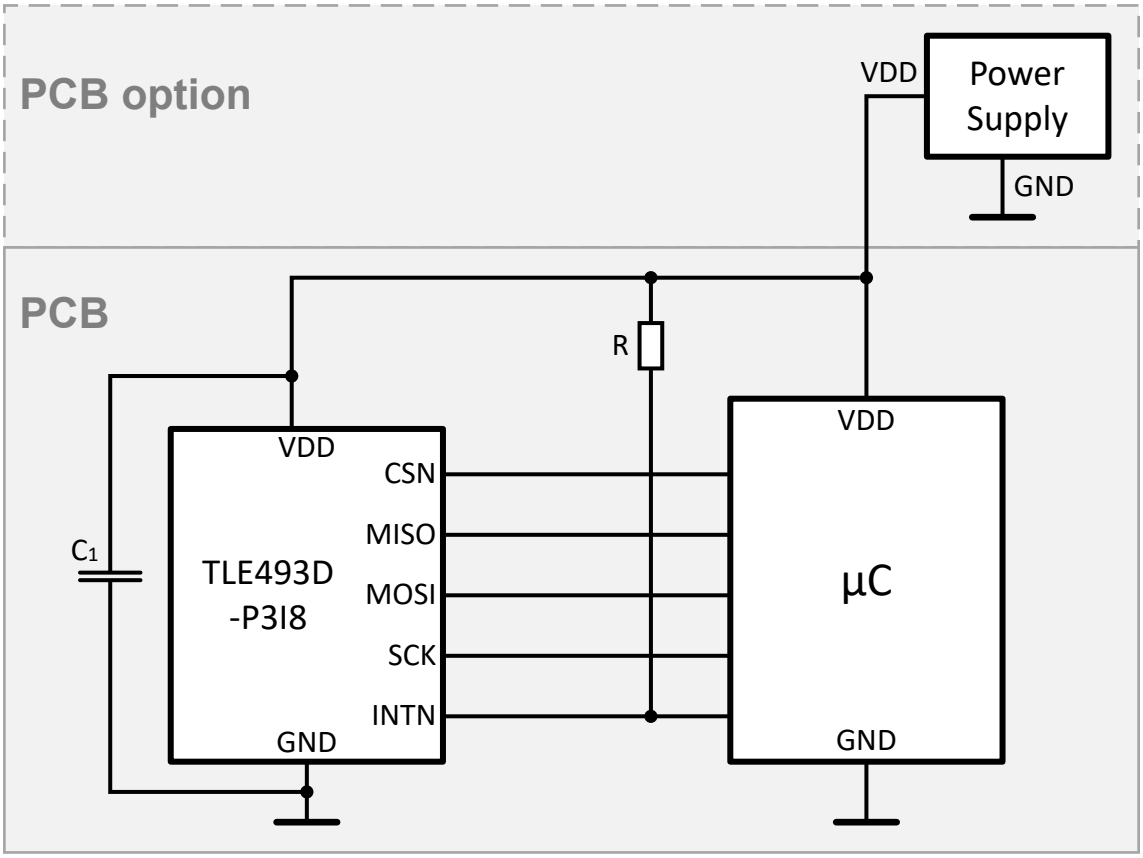

R = 1.2 kΩ
C1 = 100 nF
Wires CSN, MISO, MOSI, SCK and INTN capacitance < 30 pF each, including all stray capacitances.

Figure 21 Application Circuit with external power supply and microcontroller

The efficiency of the capacitor C1 improves with a decreasing wire length to the sensor. In case of a ferromagnetic capacitor C1 the magnetic influence on the magnetic measurement increases with a closer position to the sensor. Both aspects must be balanced and evaluated carefully in the application.

7 Package Information

This sensor is housed in a space saving, non magnetic SMD package.

7.1 Package Parameters

Table 23 Package Parameters PG-VSON-8-2

Parameter	Symbol	Values			Unit	Note or condition
		Min.	Typ.	Max.		
Soldering moisture level	*MSL1*	–	–	–	–	260°C, [4]
Thermal resistence Junction case	$R_{TH,jc}$	–	–	30	K/W	
Thermal resistance Junction ambient	$R_{TH,ja}$	–	–	170	K/W	JEDEC 2s0p

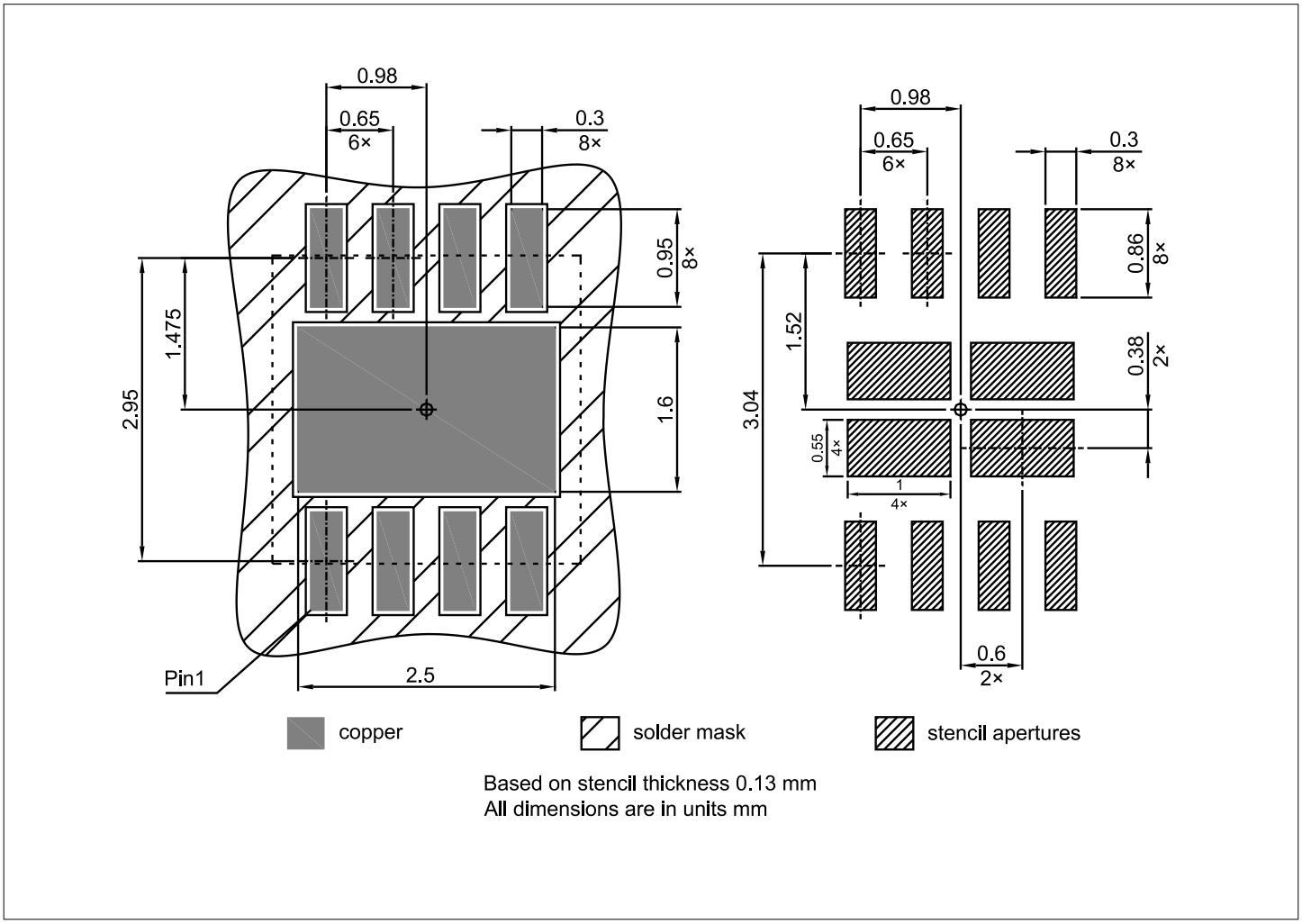

Figure 22 Footprint of the PG-VSON-8-2

[4] Reflow soldering according to JEDEC J-STD-020

7.2 Package Outlines

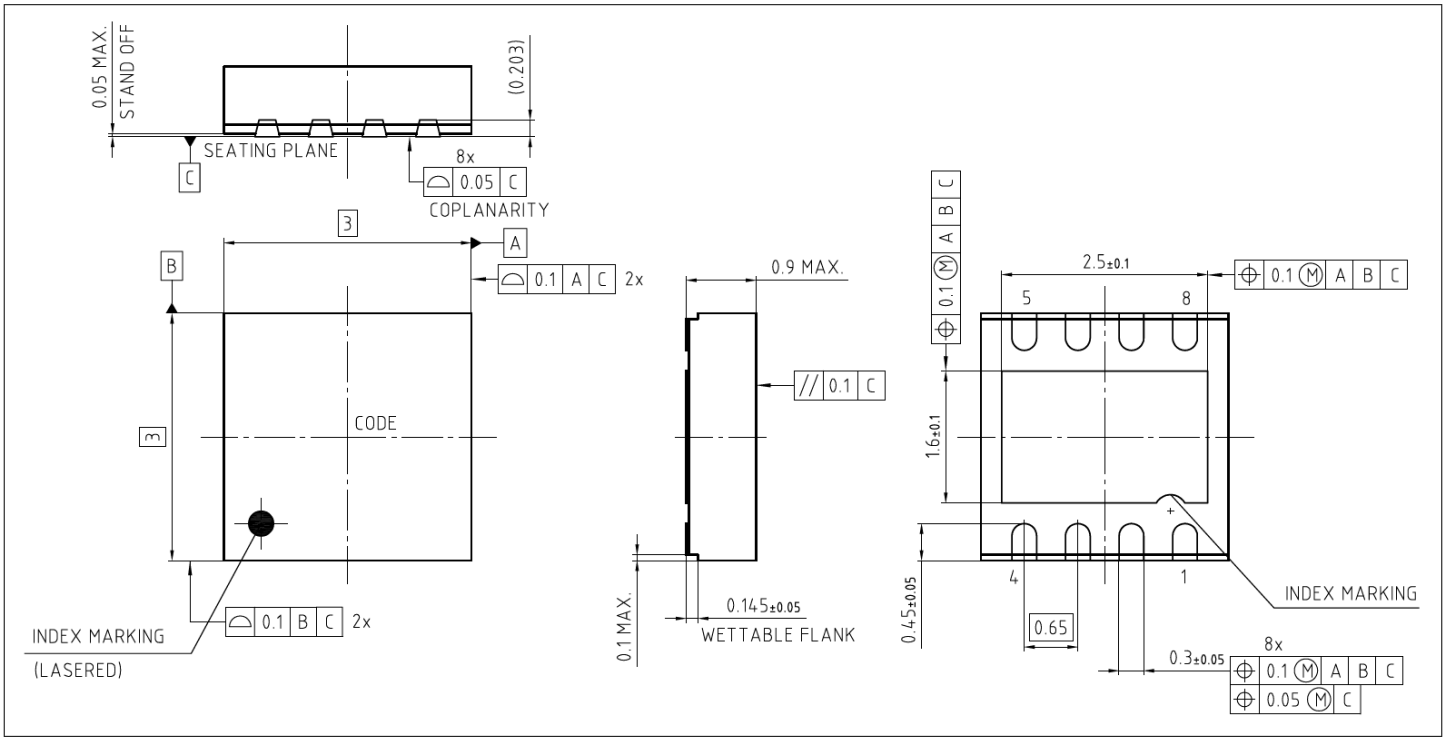

Figure 23 **Package Outlines (all dimensions in mm)**

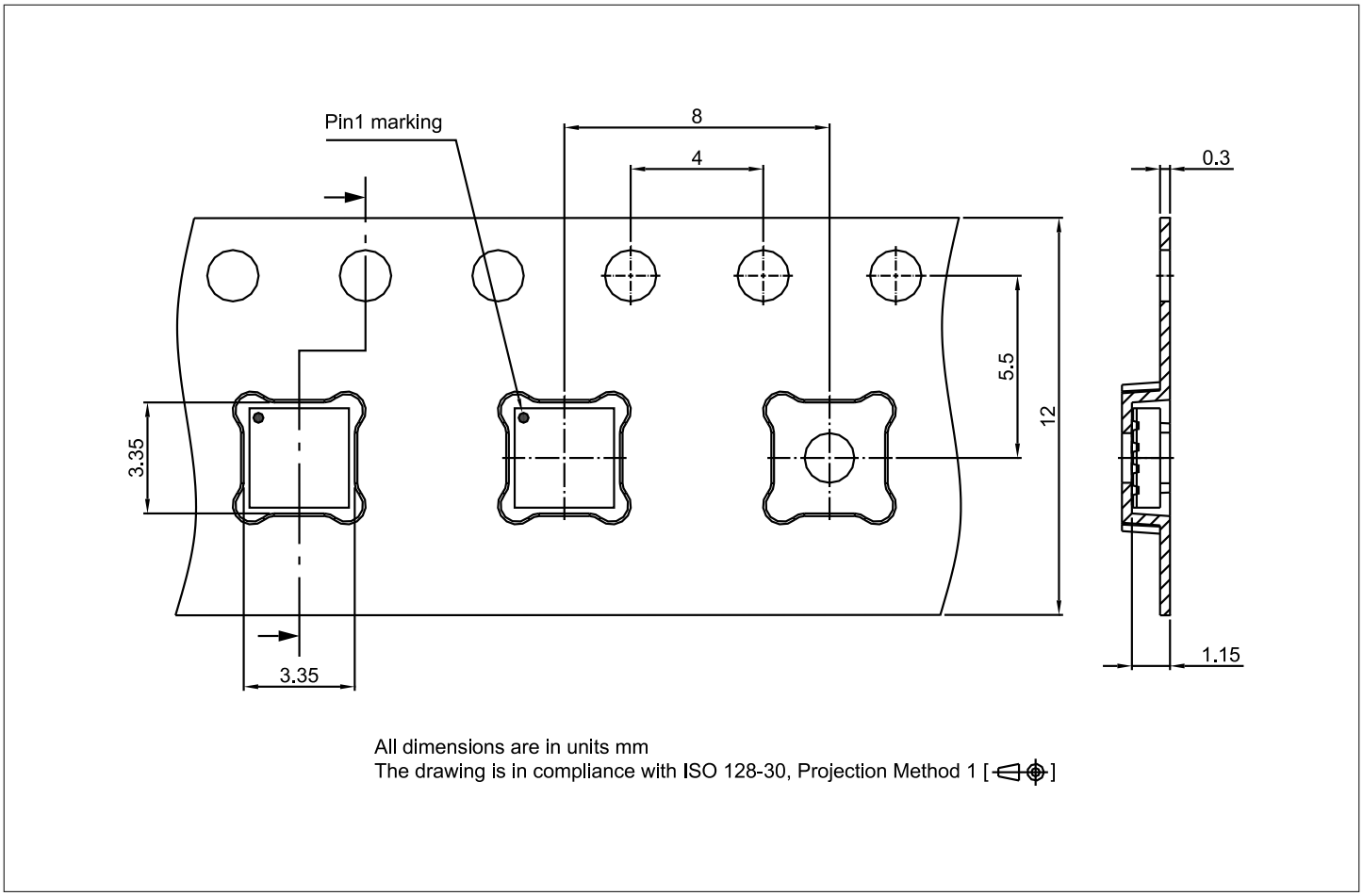

Figure 24 **PG-VSON-8-2 carrier tape packaging**

Further information about the package can be found here:
https://www.infineon.com/cms/en/product/packages/

8 Terminology

1D	one dimensional
3D	three dimensional
ADC	analog digital converter
ADDR	address
AEC	automotive electronics council
ASIL	automotive safety integrity level
CRC	cyclic redundancy check
CSN	chip select not
e.g.	exempli gratia (for example)
EMC	electromagnetic compatibility
IC	integrated circuit
INTN	interrupt pin, interrupt signal (low active)
ISO	international organization for standardization
LSB	least significant bit
magnetic field	magnetic flux density that the sensor measures
max	maximum
min	minimum
MISO	master in slave out
MOSI	master out slave in
MSB	most significant bit
MSL	moisture sensitivity level
MUX	multiplexer
PCB	printed circuit board
reg	register
reg. addr.	register address
rms	root mean square
SCK	serial clock
sensor	refers to the TLE493D-P3I8 product
sensor module	refers to the TLE493D-P3I8 product and all the passive elements in the customer's module
SEooC	safety element out of context
SIL	safety integrity level
SMD	surface mounted device
SPI	serial peripheral interface
supply	refers to the sensor supply pins VDD and GND
WU	wake up
µC	microcontroller

9 Revision history

Revision	Date	Changes
1.0	2024-08-26	Initial release
1.1	2025-01-27	Figure 24, carrier tape packaging added Table 3 updated ESD performance
1.2	2026-06-18	Figure 8 updated

Trademarks

All referenced product or service names and trademarks are the property of their respective owners.

Edition 2026-06-18

Published by

Infineon Technologies AG

81726 Munich, Germany

© 2026 Infineon Technologies AG

All Rights Reserved.

Do you have a question about any aspect of this document?

Email: erratum@infineon.com

Document reference
IFX-psy1616002018111

Important notice

Products which may also include samples and may be comprised of hardware or software or both (“Product(s)”) are sold or provided and delivered by Infineon Technologies AG and its affiliates (“Infineon”) subject to the terms and conditions of the frame supply contract or other written agreement(s) executed by a customer and Infineon or, in the absence of the foregoing, the applicable Sales Conditions of Infineon. General terms and conditions of a customer or deviations from applicable Sales Conditions of Infineon shall only be binding for Infineon if and to the extent Infineon has given its express written consent.

For the avoidance of doubt, Infineon disclaims all warranties of non-infringement of third-party rights and implied warranties such as warranties of fitness for a specific use/purpose or merchantability. Infineon shall not be responsible for any information with respect to samples, the application or customer’s specific use of any Product or for any examples or typical values given in this document.

If this document is marked as 'Preliminary', 'Target', 'Draft' or ‘Proposal’, Infineon reserves the right to change all information given in this document at any time without notice. Subject to the development and release of a Product for series supply by Infineon, the technical specifications of the Product are set forth in the relevant datasheet provided by Infineon without such marking.

The data contained in this document is exclusively intended for technically qualified and skilled customer representatives. It is the responsibility of the customer to evaluate the suitability of the Product for the intended application and the customer’s specific use and to verify all relevant technical data contained in this document in the intended application and the customer’s specific use. The customer is responsible for properly designing, programming, and testing the functionality and safety of the intended application, as well as complying with any legal requirements related to its use.

Unless otherwise explicitly approved by Infineon, Products may not be used in any application where a failure of the Products or any consequences of the use thereof can reasonably be expected to result in personal injury.

However, the foregoing shall not prevent the customer from using any Product in such fields of use that Infineon has explicitly designed and sold it for, provided that the overall responsibility for the application lies with the customer. Infineon expressly reserves the right to use its content for commercial text and data mining (TDM) according to applicable laws, e.g. Section 44b of the German Copyright Act (UrhG). If the Product includes security features:

Because no computing device can be absolutely secure, and despite security measures implemented in the Product, Infineon does not guarantee that the Product will be free from intrusion, data theft or loss, or other breaches (“Security Breaches”), and Infineon shall have no liability arising out of any Security Breaches.

If this document includes or references software:

The software is owned by Infineon under the intellectual property laws and treaties of the United States, Germany, and other countries worldwide. All rights reserved. Therefore, you may use the software only as provided in the software license agreement accompanying the software.

If no software license agreement applies, Infineon hereby grants you a personal, non-exclusive, non-transferable license (without the right to sublicense) under its intellectual property rights in the software (a) for software provided in source code form, to modify and reproduce the software solely for use with Infineon hardware products, only internally within your organization, and (b) to distribute the software in binary code form externally to end users, solely for use on Infineon hardware products. Any other use, reproduction, modification, translation, or compilation of the software is prohibited.

For further information on the Product, technology, delivery terms and conditions, and prices, please contact your nearest Infineon office or visit www.infineon.com.