76-81 GHz Radar Transceiver with Antenna Feed in Package

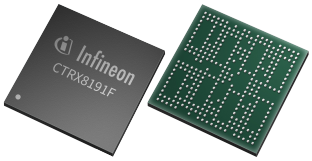

AEC Qualified

RoHS

ISO 26262 compliant

Features

- Radar transceiver with four transmit channels (waveguide ports), output power of 13 dBm and four receive channels (waveguide ports)
- Radio Frequency (RF) range from 76 GHz to 81 GHz, with fast chirp modulation up to 400 MHz/µs and maximum chirp bandwidth of 4 GHz
- Industry leading linearity (P1dB min. -1.5 dBm) and TX phase noise of -100 dBc/Hz at 1 MHz
- Cascading of several CTRX8191F transceivers to increase number of transmit and receive channels
- Highly flexible sequencer with built-in memory for execution of user defined ramp scenarios
- Widely configurable Intermediate Frequency (IF) signal conditioning providing a bandwidth up to 22.5 MHz
- Optimized for low power consumption
- Four digital data channels accessible via Low Voltage Differential Signaling (LVDS) or Camera Serial Interface 2 (CSI-2) Interfaces
- Built-in calibration and monitoring functionalities for safety applications
- Operating silicon bulk temperature range from -40°C up to +135°C
- ISO 26262 Safety Element out of Context for safety requirements up to ASIL B
- RoHS-compliant Thin-Profile Fine-Pitch 2 Ball Grid Array (TF2BGA) package with MSL3 and 0.5 mm ball pitch

Potential applications

- Automatic Emergency Braking (AEB)
- Highway Assist/Pilot including Adaptive Cruise Control (ACC)
- Lane-Change Assistant (LCA)
- Traffic Jam Assist/Pilot (TJA)

Product validation

Product validation according to AEC-Q100, Grade 1. Qualified for automotive applications.

Description

The device is a fully integrated radar transceiver operating in the frequency band between 76 and 81 GHz. It is a state-of-the art radar chip featuring 4 transmit channels, 4 receive channels, a low noise ultra-fast Digital Phase Locked Loop (DPLL), a sequencer allowing flexible radar frequency ramp signal generation, analog baseband processing line, filtering and amplification blocks, and Analog to Digital Conversion (ADC), and sample rate reduction filters - all within a Monolithic Microwave Integrated Circuit (MMIC).

These features allow cost efficient implementations of complex radar systems enabling customers to differentiate by applying specific radar ramps or modulation techniques. The device has been designed using latest automotive qualified RF technology and is housed inside an automotive qualified TF2BGA package.

Product type	Package	Marking
CTRX8191F	PG-TF2BGA-310-1	CTRX8191F
CTRX8191FS	PG-TF2BGA-310-1	CTRX8191FS

***Note**: The variant CTRX8191FS is a STAND-ALONE radar transceiver not supporting transceiver cascading.*

Table of contents

Table of contents 2
1 Device configurations 3
2 Block diagram 4
3 Product characteristics 5
4 Package outline 7
Disclaimer 8

1 Device configurations

The CTRX8191FS is a radar transceiver usable as STAND-ALONE MMIC. The CTRX8191F can be used as STAND-ALONE, PRIMARY or SECONDARY MMIC enabling a cascaded setup.

STAND-ALONE configuration:

The device can be configured as STAND-ALONE MMIC, which does not use the CLKIN / CLKOUT nor the LOIN / LOOUT ports but utilizes an external crystal and generates the clock and LO signal internally.

PRIMARY configuration:

The PRIMARY MMIC utilizes an external crystal and generates an LO signal which is available at the LOOUT pin.

Furthermore it provides a clock signal together with a trigger to start a frequency ramp scenario via the CLKOUT pin.

In the PRIMARY configuration the device also uses the CLKOUT and LOOUT signal for self-feeding at CLKIN and LOIN pin.

SECONDARY configuration:

The SECONDARY MMIC receives the clock and trigger signal from the PRIMARY MMIC at the CLKIN pin and the LO signal at one of the two LOIN pins.

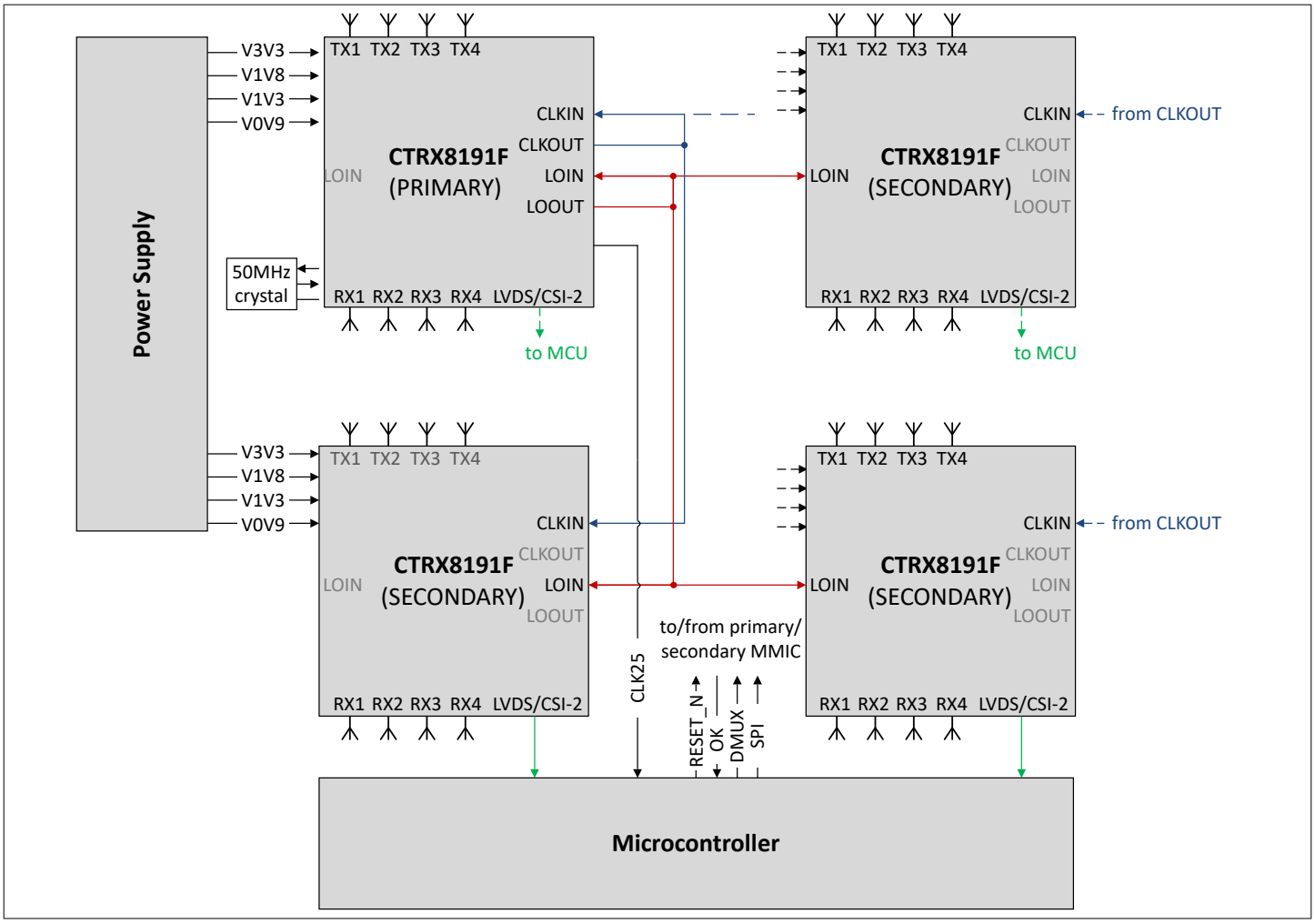

Figure 1 **Application example for four cascaded MMICs**

2 Block diagram

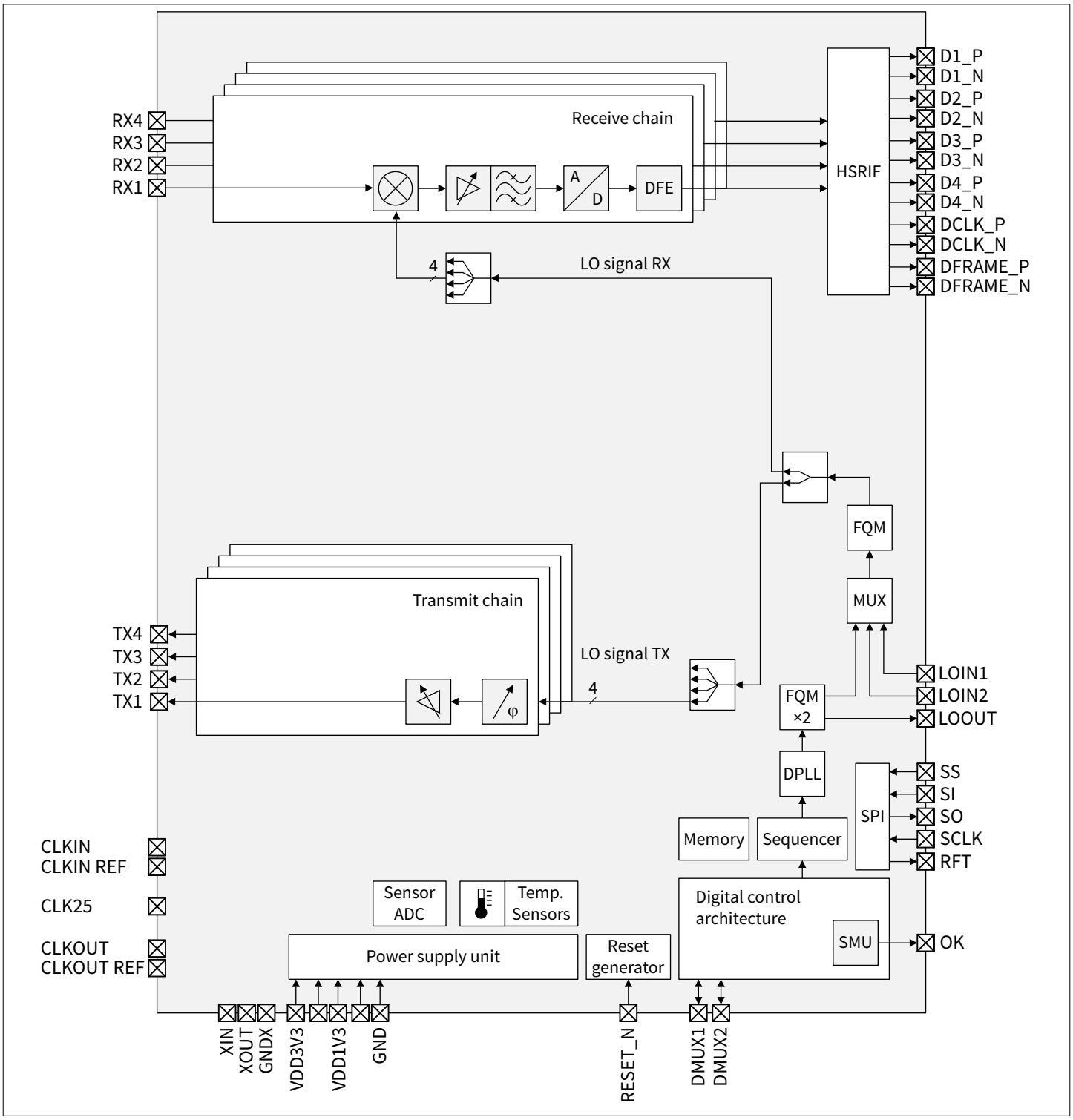

Figure 2 **Block diagram**

3 Product characteristics

Table 1 **Average power consumption of typical application use cases**

Parameter	Description	Typ. Value	Unit	Condition
Average power consumption	ADC sampling: 50 MSps Ramps / sequence: 512 Samples / ramp: 1024 Total calibration done every 5th cycle	0.85	W	1 TX (at max. power), 4 RX
		0.90	W	2 TX (at max. power), 4 RX
		0.95	W	3 TX (at max. power), 4 RX
		1.00	W	4 TX (at max. power), 4 RX

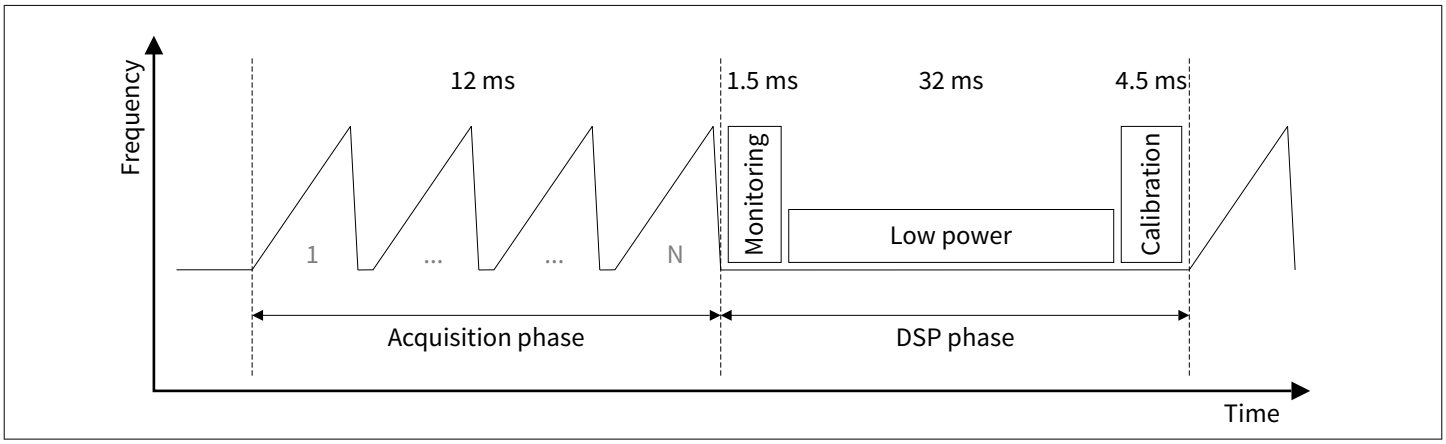

Figure 3 **Example use case for average power consumption**

Table 2 **Electrical characteristics**

Parameter	Symbol	Values			Unit	Note or condition
		Min.	Typ.	Max.		
Operating temperature range	$T_{Si,FR}$	-40	–	135	°C	–
RF operating frequency	f_{RF}	76	–	81	GHz	–
Isolation between TX and RX ports	$ISO_{TX/RX}$	40	–	–	dB	–
IF bandwidth	f_{IF}	0.001	–	22.5	MHz	–
Output sample rate	f_{OSR}	–	–	50	MS/s	–
CSI-2 data rate	DR_{CSI2}	80	–	1200	Mbit/s	–

(table continues...)

Table 2 (continued) Electrical characteristics

Parameter	Symbol	Values			Unit	Note or condition
		Min.	Typ.	Max.		
Transmitter						
RF output power at maximum setting	P_{out}	–	13	–	dBm	–
TX phase noise @ 1MHz	PN_{1MHz}	–	-100	–	dBc/Hz	–
TX phase noise @ 10MHz	PN_{10MHz}	–	-121	–	dBc/Hz	–
Receiver						
Total RX SSB noise figure @ 2 MHz	NF_{2MHz}	–	13.7	–	dB	–
Total RX SSB noise figure @ 10 MHz	NF_{10MHz}	–	12.5	–	dB	–
RX input P1dB, stop band	P_{1dB_SB}	-1.5	–	–	dBm	–
Nominal RX conversion gain	G_{nom}	–	36	–	dB (FS/mW)	–
PLL						
TX settling time	$t_{TX_settling}$	–	–	1.5	µs	–
Flyback time to reach start frequency of following chirp	$t_{flyback}$	–	–	1	µs	–
Measurement ramp slope	$\lvert S_{ramp} \rvert$	1	–	400	MHz/µs	–

4 Package outline

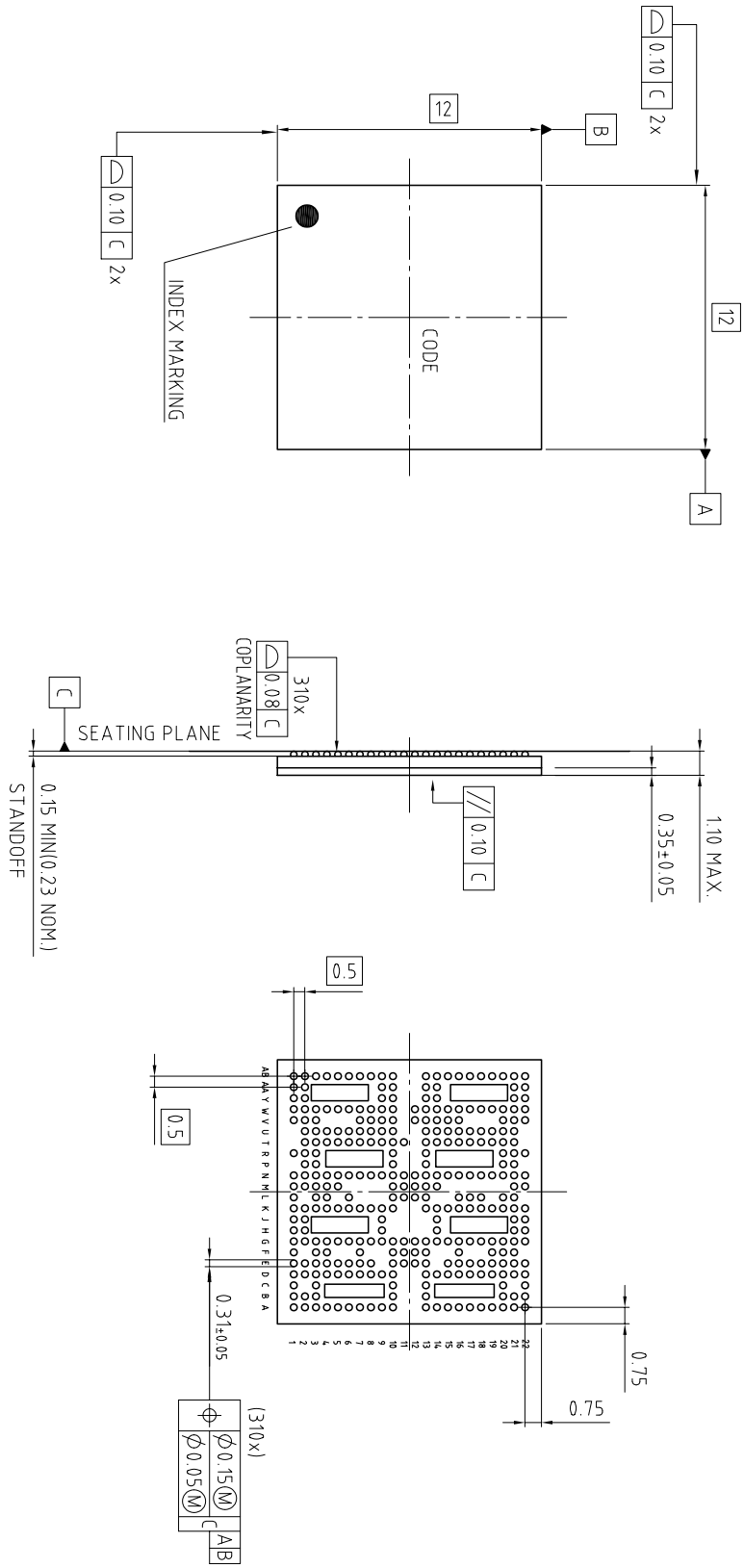

Figure 4 **Drawing of TF2BGA package; dimensions in mm**

Disclaimer

The full datasheet for this product is available under NDA

Trademarks

All referenced product or service names and trademarks are the property of their respective owners.

Edition 2025-03-20

Published by

Infineon Technologies AG

81726 Munich, Germany

© 2026 Infineon Technologies AG

All Rights Reserved.

Do you have a question about any aspect of this document?

Email: erratum@infineon.com

Document reference

xxx

Important notice

The information given in this document shall in no event be regarded as a guarantee of conditions or characteristics ("Beschaffenheitsgarantie").

With respect to any examples, hints or any typical values stated herein and/or any information regarding the application of the product, Infineon Technologies hereby disclaims any and all warranties and liabilities of any kind, including without limitation warranties of non-infringement of intellectual property rights of any third party.

In addition, any information given in this document is subject to customer's compliance with its obligations stated in this document and any applicable legal requirements, norms and standards concerning customer's products and any use of the product of Infineon Technologies in customer's applications.

The data contained in this document is exclusively intended for technically trained staff. It is the responsibility of customer's technical departments to evaluate the suitability of the product for the intended application and the completeness of the product information given in this document with respect to such application.

Warnings

Due to technical requirements products may contain dangerous substances. For information on the types in question please contact your nearest Infineon Technologies office.

Except as otherwise explicitly approved by Infineon Technologies in a written document signed by authorized representatives of Infineon Technologies, Infineon Technologies' products may not be used in any applications where a failure of the product or any consequences of the use thereof can reasonably be expected to result in personal injury.