XENSIV™ 14-bit dual-die on-axis magnetic rotary position sensor with up to 14-bit binary incremental pulse count

Key benefits & features

The benefits and features of XENSIV™ AS5147U/AS5247U device are listed below:

Table 1 Added value of using the AS5x47U

Benefits	Features
Easy to use - saving costs on DSP	DAEC™ Dynamic angle error compensation DFS™ Dynamic filter system
Higher durability and lower system costs (no shield needed)	Magnetic stray field immunity
Enabler for safety critical applications	Developed according ISO26262, diagnostics, dual redundant chip version ASIL-D capable, Safety Element out of Context (SEooC)
Suitable for automotive applications	AEC-Q100 Grade 0 qualified
Versatile choice of the interface	Independent output interfaces: SPI, ABI, UVW, PWM

Applications

The AS5x47U has been designed to support BLDC motor communication for the most challenging and safety-critical automotive applications (AEC-Q100 grade 0 automotive qualified - ISO26262 assessment) such as electric power steering (EPS), transmission (gearbox, actuator), brake (actuator) and starter/alternator.

General description

The AS5147U/AS5247U is a high-resolution redundant rotary position sensor for fast absolute angle measurement over a full 360-degree range. This position sensor is equipped with a revolutionary integrated dynamic angle error compensation (DAEC™) with almost 0 latency at higher rotational speed. For increased signal quality at lower rotational speed, the dynamic filter system (DFS™) reduces transition noise.

The robust design of the device suppresses the influence of any homogenous external stray magnetic field. A standard 4-wire SPI serial interface with a CRC protection allows a host microcontroller to read 14-bit absolute angle position data from the AS5147U/AS5247U and to program non-volatile settings without a dedicated programmer.

Incremental movements are indicated on a set of ABI signals with a maximum resolution of 16384 steps/4096 pulses per revolution.

Brushless DC (BLDC) motors are controlled through a standard UVW commutation interface with a programmable number of pole pairs from 1 to 7. The absolute angle position is also provided as PWM-encoded output signal.

The AS5147U/AS5247U supports embedded self-diagnostics for fulfilling up to ASIL D in safety relevant applications.

The AS5247U is using the Infineon stacked die technology in a TQFP-32 (7 x 7) package. The AS5147U sensor is available in a TSSOP14 Package.

Table of contents

Key benefits & features . . . 1
Applications . . . 1
General description . . . 1
Table of contents . . . 2
1 Block diagram . . . 4
2 Pin assignment . . . 5
3 Absolute maximum ratings . . . 8
4 Electrical characteristics . . . 9
4.1 Magnetic characteristics . . . 9
4.2 System specifications . . . 10
5 Timing characteristics . . . 11
6 Detailed description . . . 12
6.1 Power management . . . 12
6.2 Dynamic angle error compensation . . . 13
6.3 Adaptive filter system . . . 13
6.4 Speed measurements . . . 15
6.5 SPI interface (slave) . . . 15
6.5.1 SPI timing . . . 16
6.5.2 SPI transaction . . . 17
6.5.3 PAD word . . . 20
6.5.4 CRC checksum . . . 21
6.6 Volatile registers . . . 21
6.7 Non-volatile registers (OTP) . . . 24
6.8 ABI incremental interface . . . 26
6.8.1 UVW commutation interface . . . 27
6.8.2 PWM . . . 28
6.9 Hysteresis . . . 29
6.10 Automatic gain control (AGC) and CORDIC magnitude . . . 29
6.11 Functional safety . . . 30
6.11.1 Safety manual . . . 30
6.11.2 Safety mechanism . . . 30
6.11.3 Broken hall element function . . . 31
6.11.4 ECC . . . 31
7 Application information . . . 32
7.1 Burn and verification of the OTP memory . . . 32
7.2 Step-by-step procedure to permanently program the non-volatile memory (OTP): . . . 35
7.3 Circuit diagram . . . 38

8 **Package drawings & markings** 39
9 **Mechanical data** 42
10 **Ordering information** 44
Revision history 45
Disclaimer 46

1 Block diagram

The functional blocks of the AS5147U/AS5247U are shown below:

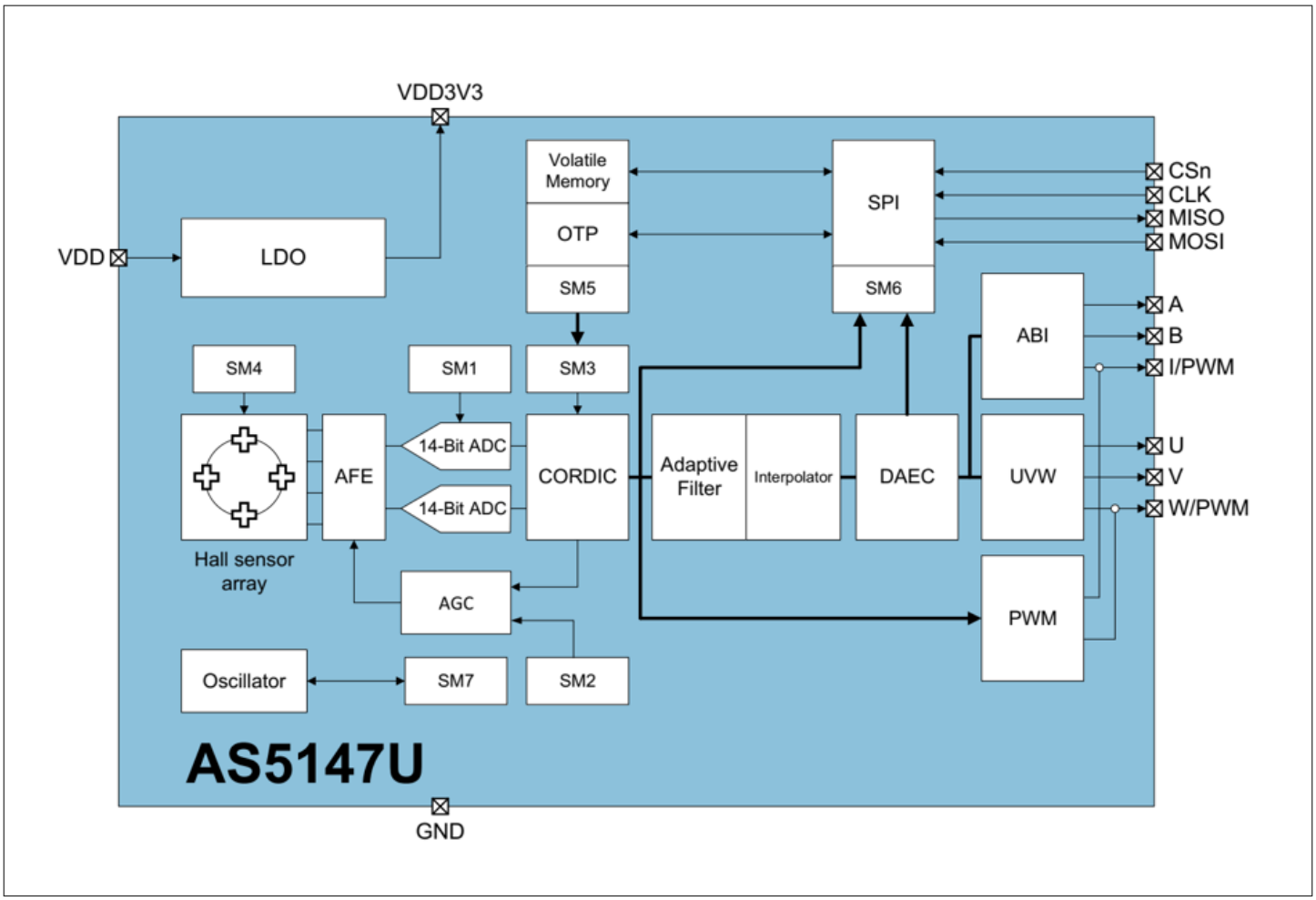

Figure 1 AS5147U block diagram

AS5247U uses 2xAS5147U in one package.

2 Pin assignment

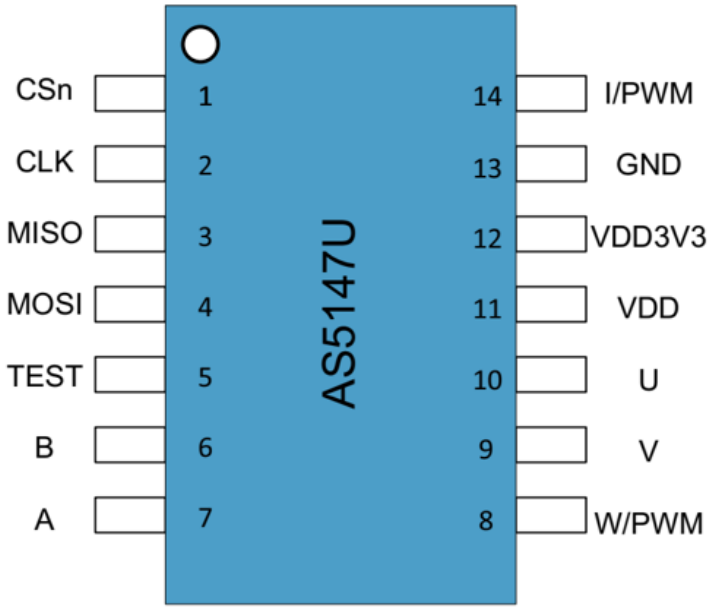

Figure 2 **TSSOP-14 pin assignment**

Table 2 **AS5147U pin description**

Pin Number	Pin Name	Pin Type	Description
1	CSn	Digital input[1)]	SPI chip select (active low)[2)]
2	CLK	Digital input[1)]	SPI clock[3)]
3	MISO	Digital output	SPI master data input, slave output[4)]
4	MOSI	Digital input[1)]	SPI master data output, slave input[3)]
5	TEST		Test pin (connect to ground)
6	B	Digital output	Incremental signal B[5)]
7	A	Digital output	Incremental signal A[5)]
8	W/PWM	Digital output	Commutation signal W or PWM-encoded output[5)]
9	V	Digital output	Commutation signal V[5)]
10	U	Digital output	Commutation signal U[5)]
11	VDD	Digital output	5 V power supply voltage for on-chip regulator
12	VDD3V3	Power supply	3.3 V on-chip low-dropout (LDO) output. Requires an external decoupling capacitor (1 µF)
13	GND	Power supply	Ground
14	I/PWM	Digital output	Incremental signal I (index) or PWM[5)]

1) Floating state of a digital input is not allowed.
2) If SPI is not used, a pull-up resistor on CSn is required.
3) If SPI is not used, a pull-down resistor on CLK and MOSI is required.
4) If SPI is not used, the pin MISO can be left open.
5) If ABI, UVW or PWM is not used, the pins can be left open.

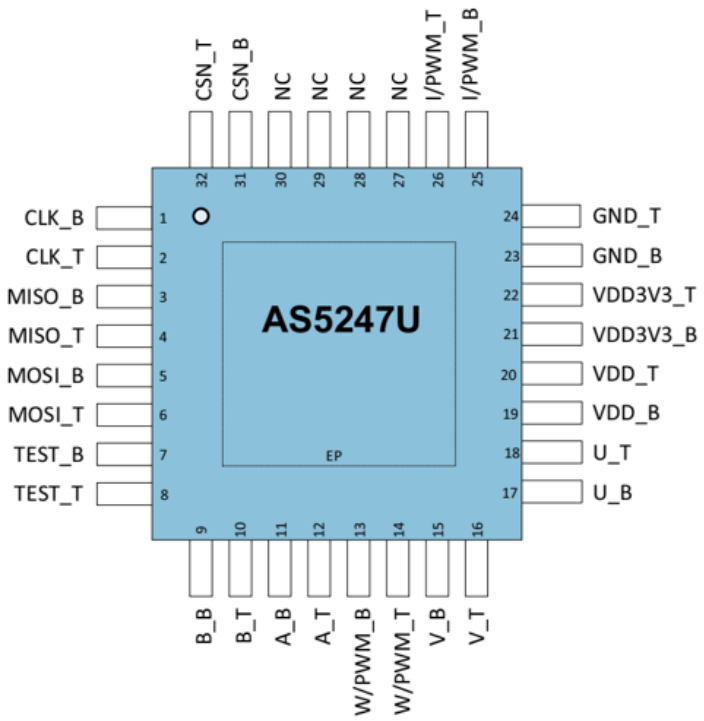

Figure 3 **TQFP32 pin assignment**

Table 3 **AS5247U pin description**

Pin Number	Pin Name	Pin Type	Description
1	CLK_B	Digital input	SPI clock[1)]
2	CLK_T	Digital input	SPI clock[1)]
3	MISO_B	Digital output	SPI master data input, SPI slave output[2)]
4	MISO_T	Digital output	SPI master data input, SPI slave output[2)]
5	MOSI_B	Digital input[3)]	SPI master data output, SPI slave input[1)]
6	MOSI_T	Digital input[3)]	SPI master data output, SPI slave input[1)]
7	Test_B		Test pin (connect to ground)
8	Test_T		Test pin (connect to ground)
9	B_B	Digital output	Incremental signal B[4)]
10	B_T	Digital output	Incremental signal B[4)]
11	A_B	Digital output	Incremental signal A[4)]
12	A_T	Digital output	Incremental signal A[4)]

(table continues...)

Table 3 (continued) AS5247U pin description

Pin Number	Pin Name	Pin Type	Description
13	W/PWM_B	Digital output	Commutation signal W or PWM encoded output[4)]
14	W/PWM_T	Digital output	Commutation signal W or PWM encoded output[4)]
15	V_B	Digital output	Commutation signal V[4)]
16	V_T	Digital output	Commutation signal V[4)]
17	U_B	Digital output	Commutation signal U[4)]
18	U_T	Digital output	Commutation signal U[4)]
19	VDD_B	Power supply	5 V power supply voltage for on-chip regulator
20	VDD_T	Power supply	5 V power supply voltage for on-chip regulator
21	VDD3V3_B	Power supply	3.3 V on-chip low -dropout (LDO) output. Requires an external decoupling capacitor (1 µF)
22	VDD3V3_T	Power supply	3.3 V on-chip low -dropout (LDO) output. Requires an external decoupling capacitor (1 µF)
23	GND_B	Power supply	Ground
24	GND_T	Power supply	Ground
25	I/PWM_B	Digital output	Incremental Signal I (index) or PWM
26	I/PWM_T	Digital output	Incremental Signal I (index) or PWM
27	NC		No function (connected to ground)
28	NC		No function (connected to ground)
29	NC		No function (connected to ground)
30	NC		No function (connected to ground)
31	CSn_B	Digital input[3)]	SPI chip select (active low)[5)]
32	CSn_T	Digital input[3)]	SPI chip select (active low)[5)]
EP	EP		Exposed pad; floating pin

1) If SPI is not used, a pull-down resistor on CLK and MOSI is required.
2) If SPI is not used, the pin MISO can be left open.
3) Floating state of a digital input is not allowed.
4) If ABI, UVW or PWM is not used, the pins can be left open.
5) If SPI is not used, a pull-up resistor on CSn is required.

3 Absolute maximum ratings

Stresses beyond those listed under Absolute Maximum Ratings may cause permanent damage to the device. These are stress ratings only. Functional operation of the device at these or any other conditions beyond those indicated under Operational Conditions is not implied. Exposure to absolute maximum rating conditions for extended periods may affect device reliability.

Table 4 Absolute maximum ratings

Symbol	Parameter	Min.	Max.	Units	Comments
Electrical Parameters					
VDD5	DC Supply Voltage at VDD pin	-0.3	7.0	V	Not operational
VDD3	DC Supply Voltage at VDD3V3 pin	-0.3	5.0	V	Not operational
V_{GND}	DC Supply Voltage at GND pin	-0.3	0.3	V	
V_{in}	Input Pin Voltage		VDD + 0.3	V	
I_{scr}	Input Current (latch-up immunity)	-100	100	mA	AEC-Q100-004
Total Power Dissipation					
P_T	Total Power Dissipation (all supplies and outputs)		150	mW	AS5147U (Single Die) x2 for AS5247U
Electrostatic Discharge					
ESD_{HBM}	Electrostatic Discharge HBM	±2		kV	AEC-Q100-002
Temperature Ranges and Storage Conditions					
T_{AMB}	Operating Temperature Range	-40	150	°C	Ambient temperature
T_{aProg}	Programming Temperature	5	45	°C	Programming @ room temperature (25°C ± 20°C)
T_{STRG}	Storage Temperature Range	-55	150	°C	
T_{BODY}	Package Body Temperature		260	°C	IPC/JEDEC J-STD-020
RH_{NC}	Relative Humidity (non-condensing)	5	85	%	
MSL	Moisture Sensitivity Level	3			Represents a maximum floor lifetime of 168h

4 Electrical characteristics

All defined tolerances in this datasheet for external components need to be assured over the whole operation conditions range and even over lifetime.

Overall condition: T_{AMB} = -40°C to 150°C components spec; unless otherwise noted.

Table 5 Operational conditions

Symbol	Parameter	Conditions	Min.	Typ.	Max.	Units
VDD5	Positive supply voltage	5.0 V operation mode	4.5	5.0	5.5	V
VDD3V3	Positive supply voltage	3.3 V operation mode; only from -40°C to 150°C (Noiseset bit has to set)	3.0	3.3	3.6	V
VDD_Burn	Positive supply voltage	Supply voltage required for programming in 3.3 V operation	3.3		3.5	V
V_{REG}	Regulated voltage	Voltage at VDD3V3 pin if VDD ≠ VDD3V3	3.2	3.4	3.6	V
I_{DD}	Supply current	AS5147U (AS5247U IDD x 2)			16 (32)	mA
V_{IH}	High-level input voltage		0.7 × VDD			V
V_{IL}	Low-level input voltage				0.3 × VDD	V
V_{OH}	High-level output voltage		VDD - 0.5			V
V_{OL}	Low-level output voltage				V_{GND} + 0.4	V
C_L					50	pF
I_Out_5V	Output current 5 V operation				4	mA
I_Out_3V	Output current 3 V operation				2	mA

***Note**: Only applicable for digital output pins I/PWM, A, B, U, V, W/PWM, MISO.*

4.1 Magnetic characteristics

Table 6 Magnetic characteristics

Symbol	Parameter	Conditions	Min.	Typ.	Max.	Unit
Bz[1)]	Orthogonal magnetic field strength	Required orthogonal component of the magnetic field strength measured at the die surface along a circle of 1.1 mm radius.	35		70	mT

1) All datasheet parameters are still valid as long as AGC (Automatic Gain Control) stays in range. To ensure a proper function of the AGC regulation loop, readout of ERRFL register (0x0001) or AGC register (0x3FF9) is required. Sensor can work with lower magnetic input field which influences spec parameters in terms of noise and accuracy. In case the sensor will be used in application with wider z distance, please contact the support team for detailed information

4.2 System specifications

Table 7 System specifications

Symbol	Parameter	Conditions	Min.	Typ.	Max.	Units
RES	Core and resolution on SPI			14		bit
RES_ABI	Resolution of the ABI interface	Programmable with register setting (ABIRES)	25		4096	pulses
INL_{OPT} @25°C	Non-linearity,optimum placement of the magnet			±0.4	±0.8	degree
$INL_{OPT+TEMP}$	Non-linearity @ displacement of magnet and temperature -40°C to 150°C			±0.6	±1	degree
$INL_{DIS+TEMP}$	Non-linearity @ displacement of magnet and temperature -40°C to 150°C	Assuming N35H magnet (D=8 mm, H=3 mm) 500 µm displacement in x and y z-distance @2000 µm			±1.2	degree
ONL	RMS output noise (1 sigma) on SPI, ABI and UVW. Not tested, guaranteed by design	Orthogonal component for the magnetic field within the specified range (Bz), NOISESET= 0		0.034	0.068	degree
ONH	RMS output noise (1 sigma) on SPI, ABI and UVW. Not tested, guaranteed by design	Orthogonal component for the magnetic field within the specified range (Bz), NOISESET = 1		0.041	0.082	degree
t_{delay}	System propagation delay – core	Reading angle via SPI	90		110	µs
t_{delay_DAEC}	Residual system propagation delay after dynamic angle error correction	At ABI, UVW and SPI	1.5		1.9	µs
t_{sampl}	Refresh time of DAEC	Refresh time at SPI (ANGLECOM), ABI, UVW	202	222	247	ns
DAE_{1700}	Dynamic angle error	At 1700 rpm constant speed			0.02	degree
DAE_{max}	Dynamic angle error	At 28000 rpm constant speed			0.32	degree
MS	Maximum speed				28000	rpm

Reference magnet: N35H, 8 mm diameter; 3 mm thickness. Magnet in the Bz range.

5 Timing characteristics

Table 8 Timing specifications

Symbol	Parameter	Conditions	Min.	Typ.	Max.	Units
t_{pon}	Power-on time	Guaranteed by design. Time between VDD > VDD_{min} and the first valid outcome			10	ms

6 Detailed description

The AS5147U/AS5247U is a Hall-effect magnetic sensor using a CMOS technology. The Hall sensors convert the magnetic field component perpendicular to the surface of the chip into a voltage.

The signals from the Hall sensors are amplified and filtered by the analog front-end (AFE) before being converted by the analog-to-digital converter (ADC). The output of the ADC is processed by the hardwired CORDIC (coordinate rotation digital computer) block to compute the angle and magnitude of the magnetic vector. The intensity of the magnetic field (magnitude) used by the automatic gain control (AGC) to adjust the amplification level for compensation of the temperature and magnetic field variations.

The AS5147U/AS5247U generates continuously the angle information, which can be requested by the different interfaces of the device. The internal 14-bit resolution is available by readout register via the SPI interface. The resolution on the ABI output can be programmed for 10 to 14 bits.

The Dynamic Angle Error Compensation block corrects the calculated angle regarding latency by using a linear prediction calculation algorithm. At constant rotation speed the latency time is internally compensated by the AS5147U/AS5247U , reducing the dynamic angle error at the SPI, ABI and UVW outputs.

The adaptive filter block is implemented after the compensation block and reduces the transition noise at low rotation speed. The stable information is available on SPI, ABI and UVW.

AS5147U/AS5247U allows selecting between a UVW output interface and a PWM encoded interface on the W pin.

The non-volatile settings in the AS5147U/AS5247U is programmed through the SPI interface without any dedicated programmer.

The sensor can support high-speed application up to 28krpm.

AS5147U/AS5247U is developed as SEooC, with assumed top level safety requirements, and supports together with the safety manual motor applications up to ASIL D.

6.1 Power management

The AS5x47U can be either powered from a 5.0 V supply using the on-chip low-dropout regulator or from a 3.3 V voltage supply. The LDO regulator is not intended to power any other loads, and it needs a 1 µF capacitor to ground located close to chip for decoupling as shown in Figure 4.

In 3.3.V operation, VDD and VREG shall connected together. In this configuration, normal noise performance (ONL) is available at reduced maximum temperature (125°C) by clearing NOISESET to 0. When NOISESET is set to 1, the full temperature range is available with reduced noise performance (ONH).

Table 9 Temperature range and output noise in 3.3 V and 5.0 V mode

VDD (V)	NOISESET	Temperature Range (°C)	RMS Output Noise (degree)
5.0	0	-40 to 150	0.068
3.3	0	-40 to 125	0.068
3.3	1	-40 to 150	0.082

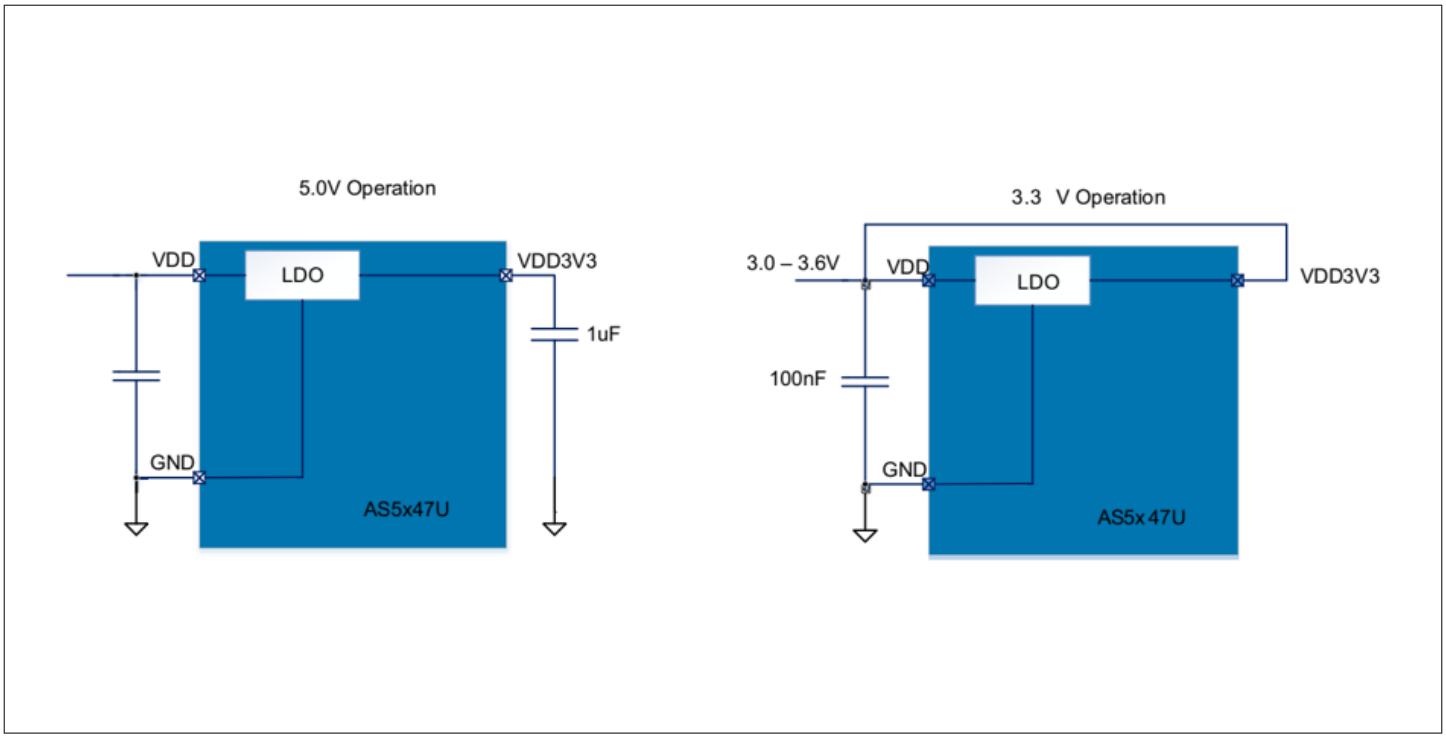

Figure 4 **5.0 V and 3.3 V power supply options**

Setting valid for one sensor IC. Double setting necessary for AS5247U.

6.2 Dynamic angle error compensation

The AS5x47U uses 4 integrated Hall sensors which produce a voltage proportional to the orthogonal component of the magnetic field to the die. These voltage signals are amplified, filtered, and converted into the digital domain to allow the CORDIC digital block to calculate the angle of the magnetic vector. The propagation of these signals through the analog front-end and digital back-end generates a fixed delay between the time of measurement and the availability of the measured angle at the outputs. This latency generates a dynamic angle error represented by the product of the angular speed (ω) and the system propagation delay (t_{delay}):

$$DAE = \omega \times t_{delay} \quad (1)$$

The dynamic angle compensation block calculates the current magnet rotation speed (ω) and multiplies it with the system propagation delay (t_{delay}) to determine the correction angle to reduce this error. At constant speed, the residual system propagation delay is t_{delay_DAEC}.

The angle represented on the PWM interface is not compensated by the Dynamic Angle Error Compensation algorithm. It is also possible to disable the Dynamic Angle Error Compensation with the DAECDIS setting. Disabling the Dynamic Angle Error Compensation gives a noise benefit of 0.016 degree rms. This setting can be advantageous for low speed (under 100 RPM) respectively static positioning applications.

6.3 Adaptive filter system

The AS5x47U uses an implemented adaptive filter system, which reduces the transition noise. The filter works dynamically depending on acceleration (positive and negative acceleration) of rotating system. It is able to match the right filter coefficients automatically. The filter coefficients (K value), which define also the limits in which the filters is acting, can be set in the OTP (K_ min = 0x00 and K_max = 0x00 by default).In addition, there is the possibility to turn off the filter in the OTP.

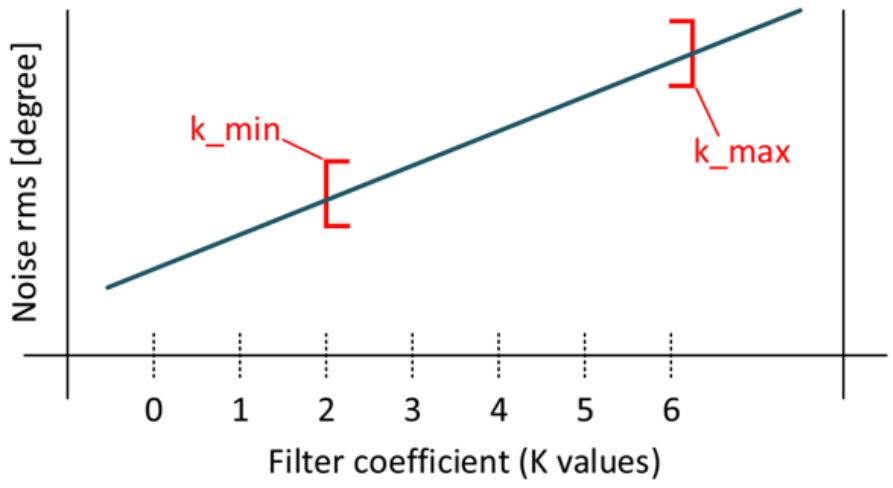

Figure 5 **Noise vs K values**

For detailed application information please refer to the Application Note: `AS5x47U_Adaptive_Filter`.

Table 10 **K value configuration**

K_Min [LSB]	Minimum K Value	K_Max [LSB]	Minimum K Value
000	2	000	6
001	3	001	5
010	4	010	4
011	5	011	3
100	6	100	5
101	0	101	1
110	1	110	0
111	1	111	0

Table 11 **Adaptive filter system setting**

Symbol	Parameter	Min.	Typ.	Max.	Unit	Notes
fcorner	Corner frequency	48		3059	Hz	Depending on K setting in the OTP
ONFdyn	Noise during rotation	0.019		0.086	°	RMS noise (depending on the selected K setting)
ONFstat	Noise when stand still	0.011		0.084	°	Depending on K setting in the OTP

Table 12 Corner frequency vs noise

K Value	fcorner Filter Corner Frequency [Hz]	ONFdyn Noise During Rotation [degree]	ONFstat Noise When Stand Still [degree]
0	48	0.019	0.011
1	97	0.028	0.017
2	194	0.036	0.032
3	387	0.048	0.044
4	773	0.062	0.059
5	1548	0.077	0.077
6	3095	0.086	0.084

6.4 Speed measurements

The AS5x47U features an average angular velocity calculation algorithm with 14-bit resolution. This angular velocity information is available over SPI and can be used without further averaging in the ECU is needed.

Table 13 Angular velocity measurement parameter

Symbol	Parameter	Min.	Typ.	Max.	Unit	Notes
V_{Res}	Velocity signal resolution		14		bit	Two's complement value
V_{Range}	Measurement range (default)	-28000		28000	rpm	
V_{SENS}	Velocity sensitivity (default)		24.141		°/s/bit	14-bit resolution
V_{ERROR}	Velocity total error			±5	%	Based on actual rotation speed
F_{Cutoff}	Cut off frequency	16.9	68.4	231	Hz	Depending on K value (see Adaptive filter system)

Table 14 Angular velocity measurement filter parameters

Filter Setting	Typ.	Unit	Notes
K=0	5.8	°/s	RMS noise
K=1	6		
K=2	8.4		
K=3	19.8		
K=4	51.8		
K=5	121.9		
K=6	244.9		

6.5 SPI interface (slave)

The SPI interface shall connected to a host microcontroller (master) to read or write the volatile memory as well as to program the non-volatile OTP registers.

The AS5x47U SPI only supports slave operation mode. It communicates at clock rates up to 10 MHz.

The AS5x47U SPI uses mode=1 (CPOL=0, CPHA=1) to exchange data. As shown in Figure 6, a data transfer starts with the falling edge of CSn (CLK is low). The AS5x47U samples MOSI data on the falling edge of CLK. SPI commands are executed at the end of the frame (rising edge of CSn). The bit order is MSB first.

A CRC is protecting the SPI Data.

6.5.1 SPI timing

The AS5x47U SPI timing is shown in Figure 6.

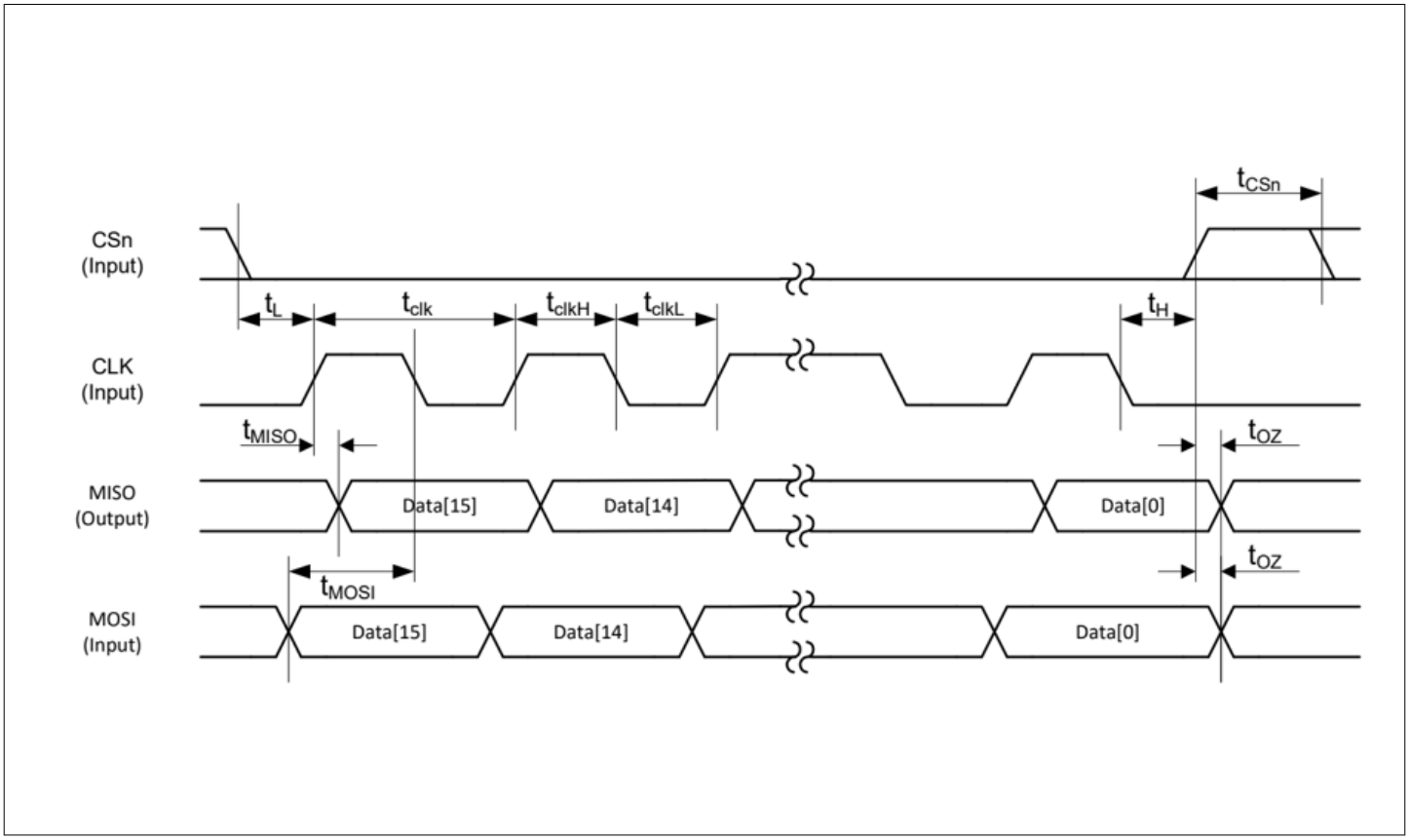

Figure 6 **SPI timing diagram**

Table 15 **SPI timing**

Parameter	Description	Min.	Max.	Units
t_L	Time between CSn falling edge and CLK rising edge	350[1)]		ns
t_{CLK}	Serial clock period	100		ns
t_{CLKL}	Low period of serial clock	50		ns
t_{CLKH}	High period of serial clock	50		ns
t_H	Time between last falling edge of CLK and rising edge of CSn	$t_{CLK/2}$		ns
t_{XSSH}	High time of SS/ between two transmissions	350[1)]		ns
t_{MOSI}	Data input valid to clock edge	20		ns

(table continues...)

Table 15 (continued) SPI timing

Parameter	Description	Min.	Max.	Units
t_{MISO}	CLK edge to data output valid		51	ns
t_{OZ}	Time between CSn rising edge and MISO HiZ		10	ns

1) Synchronization with the internal clock → 2 * t_{CLK_SYS} + 10 ns (t_{CLK_SYS} is 9 MHz, typ.)

6.5.2 SPI transaction

AS5x47U provides two different SPI transactions

- 16-bit SPI frame without CRC (for high throughput)
- 24-bit SPI frames with CRC
- 32-bit SPI frames with CRC. The 32-bit SPI frames includes 8-bit PAD word

For high-throughput requirements, the AS5x47U can handle 16-bit frames for read operations. This allows reading more than 400000 angle positions per second.

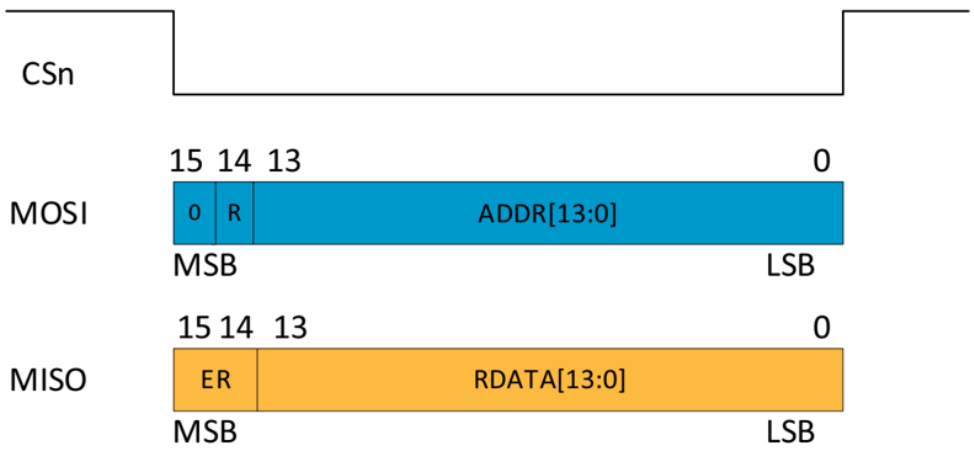

Figure 7 16-Bit SPI frame

Table 16 16-Bit command frame

Bit	Name	Description
15	0	Do not Care
14	R	1: Read
13:0	ADDR[13:0]	Address

Table 17 16-Bit data frame

Bit	Name	Description
15	ER	Warning Bit

(table continues...)

Table 17 (continued) 16-Bit data frame

Bit	Name	Description
14		Error Bit
13:0	DATA[13:0]	Data

24-bit SPI frames and 32-bit SPI frames have CRC for increased reliability of communication over the SPI. A wrong setting of the calculation/setting of the CRC causes a CRC error, which sets the CRCERR bit in the error flag register.

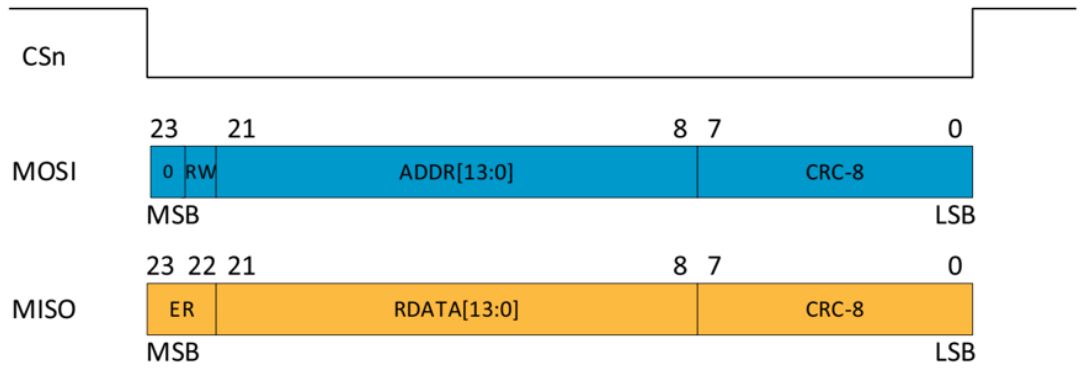

Figure 8 24-Bit spi frame

Table 18 24-Bit command frame

Bit	Name	Description
23	0	Do not Care
22	RW	0: Write 1: Read
21:8	ADDR[13:0]	Address
7:0	CRC	Calculated CRC

Table 19 24-Bit data frame

Bit	Name	Description
23	ER	Warning Bit
22		Error Bit
21:8	DATA[13:0]	Data
7:0	CRC	Calculated CRC

The 32-bit frames have a "PAD Word", which is applicable for operation in daisy chain mode. In automotive applications, the PAD Word can be used as additional communication protection.

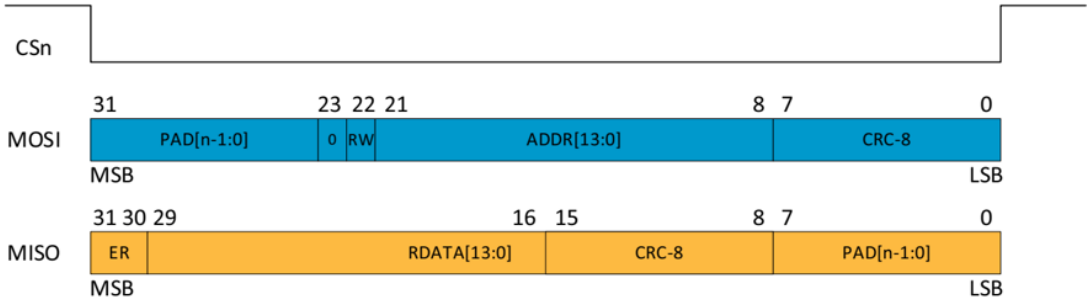

Figure 9 **32-Bit SPI frame**

Table 20 **32-Bit command frame**

Bit	Name	Description
31:24	PAD	PAD Number
23	0	Do Not care
22	RW	0: Write 1: Read
21:8	ADDR[13:0]	Address
7:0	CRC	Calculated CRC

Table 21 **32-Bit data frame**

Bit	Name	Description
31	ER	Warning Bit
30		Error Bit
29:16	Data	Data
15:8	CRC	Calculated CRC
7:0	PAD	PAD Number

The data sent on the MISO pin. The CRC is calculated by the AS5147U/AS5247U. If an error or a warning is detected in the previous SPI command frame, the Error or Warning bit is set high. The SPI read is synchronized on the rising edge of CSn and the data is transmitted on MISO with the next read command, as shown in Figure 10.

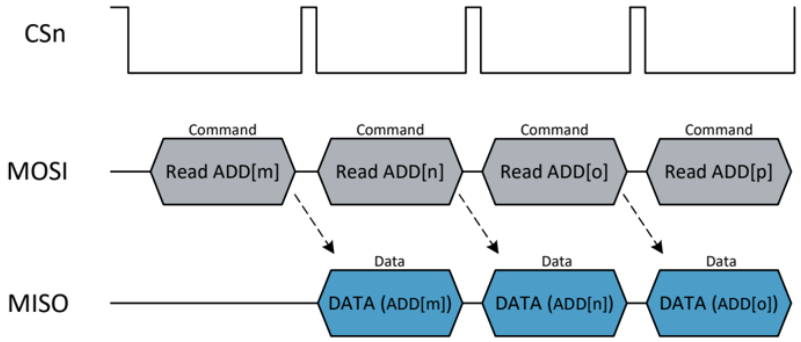

Figure 10 SPI read

Recommended CRC calucation see chapter CRC Checksum In an SPI write transaction, the write command frame is followed by a write data frame at MOSI. The write data frame consists of the new content of register which address is in the command frame. During the new content is transmitted on MOSI by the write data frame, the old content is send on MISO. At the next command on MOSI the actual content of the register is transmitted on MISO, as shown in Figure 11.

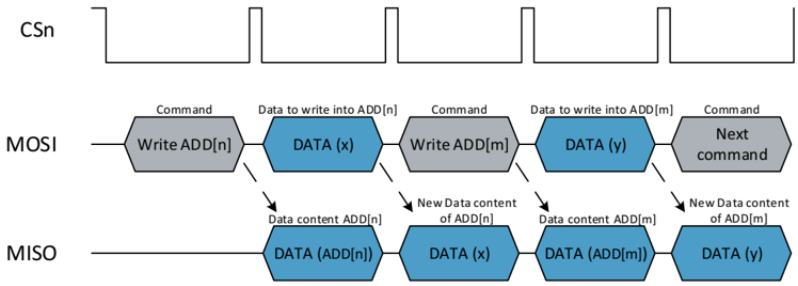

Figure 11 SPI write

6.5.3 PAD word

Any number of PAD [8 * n-1:0] bits can precede the MOSI data. The PAD word is used to allocate the data on MISO to the correct device.

6.5.4 CRC checksum

For secure and reliable data transmission, the 24-bit and 32-bit frames have a CRC for verification of correct transmission. The CRC is calculated out of the payload of the SPI frame.

For the 24-bit SPI frames, the CRC calculation is based on bits 23:8. For the 32-bit command frame (MOSI), the CRC calculation is based on bits 23:8 as well. For the 32-bit data frame (MISO), the CRC is calculated based on bits 31:16. The PAD Number in the 32-bit frame does not affect the CRC.

The calculation of the CRC is based on Irreducible polynomial x^4+x^3+x^2+1.

The initialization CRC = 0xC4 prevents that 0x000000 is a valid SPI command. This command would clear all sticky error flags.

Table 22 CRC parameters

Name	Value
CRC width	8-bit
Polynomial	0x1D
Initial value	0xC4
Input reflected	No
Result reflected	No
Final XOR value	0xFF

6.6 Volatile registers

The volatile registers are shown in Table 23. Each register has a 14-bit address.

Table 23 Volatile memory register description

Address	Name	Default	Description
0x0000	NOP	0x0000	No operation
0x0001	ERRFL	0x0000	Error register
0x0003	PROG	0x0000	Programming register
0x3FF5	DIA	0xX3C2 or 0xXBC2 for 3.3V mode, 0xX3C3 or 0xXBC3 for 5V mode	DIAGNOSTIC
0x3FF9	AGC	0x0000	AGC Value
0x3FFA	Sin-data	0x0000	Raw digital sine channel data
0x3FFB	Cos-data	0x0000	Raw digital cosine channel data
0x3FFC	VEL	0x0000	Velocity
0x3FFD	MAG	0x0000	CORDIC magnitude
0x3FFE	ANGLEUNC	0x0000	Measured angle without dynamic angle error compensation
0x3FFF	ANGLECOM	0x0000	Measured angle with dynamic angle error compensation

(table continues...)

Table 23 (continued) Volatile memory register description

Address	Name	Default	Description
0x00D1	ECC_Checksum	0x000	ECC checksum calculated based on actual register setting

Table 24 ERRFL(0x0001)

Name	Read/Write	Bit Position	Description
CORDIC Overflow	R	10	Reading the Overflow bit of the CORDIC
OffCompNotFi nished	R	9	In case the flag is 1 the internal offset compensation is not finished
BRKHALL	R	8	Broken Hall element information
WDTST	R	7	**Watchdog information .** In case the flag sets to 1, the internal oscillator or the watchdog is not working correctly
CRC error	R	6	CRC error during SPI communication
Command_ error	R	5	SPI invalid command received
Framing error	R	4	Framing if SPI communication wrong
P2ram_error	R	3	ECC has detected 2 uncorrectable errors in P2RAM in customer area
P2ram_ warning	R	2	ECC is correcting one bit of P2RAM in customer area
MagHalf	R	1	This flag sets to 1 in case the AGC Value reaches 255 LSB and the magnitude value is the half of the of the regulated magnitude value (between AGC = 0LSB and AGC = 255LSB) which is typical 4800LSB.
Agc-warning	R	0	Agc-warning = 1. The flag sets to 1 in case the AGC Value reaches 0LSB or 255LSB. The detailed information which level is reached can be found in the diagnostic register.

Reading the ERRFL register automatically clears its contents (ERRFL=0x0000).In case of an error flag, a read of the DIA register is mandatory

Table 25 PROG(0x0003)

Name	Read/Write	Bit Position	Description
PROGVER	R/W	6	Program verify: Must be set to 1 for verifying the correctness of the OTP programming
PROGOTP	R/W	3	Start OTP programming cycle
OTPREF	R/W	2	Refreshes the non-volatile memory content with the OTP programmed content

(table continues...)

Table 25 (continued) PROG(0x0003)

Name	Read/Write	Bit Position	Description
PROGEN	R/W	0	Program OTP enable: Enables reading/writing the OTP memory

The PROG register is used for programming the OTP memory.

Table 26 DIA(0x3FF5)

Name	Read/Write	Bit Position	Description
SPI_cnt	R	11:12	SPI frame counter
Fusa_error	R	10	Error flag broken Hall element
AGC_finished	R	9	Initial AGC settling finished
Off comp finished	R	8	Error flag offset compensation finished
SinOff_fin	R	7	Sine offset compensation finished
CosOff_fin	R	6	Cosine offset compensation finished
MagHalf_flag	R	5	Error flag magnitude is below half of target value
Comp_h	R	4	Warning flag AGC high
Comp_l	R	3	Warning flag AGC low
Cordic_overflow	R	2	Error flag CORDIC overflow
LoopsFinished	R	1	All magneto core loops finished
Vdd_mode	R	0	VDD supply mode: 0: VDD 3.0 Mode 1: VDD 5.0 Mode

Table 27 AGC(0x3FF9)

Name	Read/Write	Bit Position	Description
AGC	R	7:0	8-bit AGC value

Table 28 VEL(0x3FFC)

Name	Read/Write	Bit Position	Description
Vel	R	13:0	Velocity value (14-bit signed integer)

Table 29 MAG(0x3FFD)

Name	Read/Write	Bit Position	Description
Mag	R	13:0	CORDIC magnitude information

Table 30 ANGLEUNC(0x3FFE)

Name	Read/Write	Bit Position	Description
ANGLEUNC	R	13:0	Angle information without dynamic angle error compensation

Table 31 ECC_s(0x3FD0)

Name	Read/Write	Bit Position	Description
ECC_s	R	6:0	Calculated ECC checksum

Table 32 ANGLECOM(0x3FFF)

Name	Read/Write	Bit Position	Description
ANGLECOM	R	13:0	Angle information with dynamic angle error compensation

6.7 Non-volatile registers (OTP)

The OTP (One-Time Programmable) memory is used to store the absolute zero position of the sensor and the customer settings permanently in the sensor IC. SPI write/read access is possible several times for all non-volatile registers (soft write). Soft written register content will be lost after a hardware reset. The programming itself can be done just once. Therefore the content of the non-volatile registers is stored permanently in the sensor. The register content is still present after a hardware reset and cannot be overwritten. For a correct function of the sensor the OTP programming is not required. If no configuration or programming is done, the non-volatile registers are in the default state 0x0000.

Table 33 Non-volatile register table

Address	Name	Default	Description
0x0015	DISABLE	0x0000	Outputs and filter disable register
0x0016	ZPOSM	0x0000	Zero position MSB
0x0017	ZPOSL	0x0000	Zero position LSB/MAG diagnostic
0x0018	SETTINGS1	0x0000	Customer setting register 1
0x0019	SETTINGS2	0x0000	Customer setting register 2
0x001A	SETTINGS3	0x0000	Customer setting register 3
0x001B	ECC	0x0000	ECC Settings

Table 34 DISABLE(0x0015)

Name	Read/Write/ Program	Bit Position	Description
UVW_off	R/W/P	0	0: Normal mode (default) 1: Switch UVW output off (tristate)

(table continues...)

Table 34 (continued) DISABLE(0x0015)

Name	Read/Write/ Program	Bit Position	Description
ABI_off	R/W/P	1	0: Normal mode (default) 1: Switch ABI output off (tristate)
BRKHALL_Set	R/W/P	2:5	0: Broken Hall element mechanism off > 1: Broken Hall element threshold
FILTER_disable	RW	6	0: Filter enabled (default) 1: Filter disabled

Table 35 ZPOSM(0x0016)

Name	Read/Write/Program	Bit Position	Description
ZPOSM	R/W/P	7:0	8 most significant bits of the zero position

Table 36 ZPOSL(0x0017)

Name	Read/Write/ Program	Bit Position	Description
ZPOSL	R/W/P	5:0	6 least significant bits of the zero position
Dia1_en	R/W/P	6	Default = 0; Enables the safe states of SM1 and SM4 on ABI/UVW
Dia2_en	R/W/P	7	Default = 0; Enables the safe states of SM8 on ABI/UVW

Table 37 SETTINGS1(0x0018)

Name	Read/Write/Program	Bit Position	Description
k_max	R/W/P	2:0	K max. for adaptive filter setting
K_min	R/W/P	5:3	K min. for adaptive filter setting
Dia3_ en	R/W/P	6	Default=0; Enables the safe states of SM2 on ABI/UVW

Table 38 SETTINGS2(0x0019)

Name	Read/Write/ Program	Bit Position	Description
IWIDTH	R/W/P	0	0:3 pulses 1:1 pulse
NOISESET	R/W/P	1	Noise setting for 3.3 V operation at 150°C
DIR	R/W/P	2	Rotation direction

(table continues...)

Table 38 (continued) SETTINGS2(0x0019)

Name	Read/Write/ Program	Bit Position	Description
UVW_ABI	R/W/P	3	Defines the PWM output (0=ABI is operating, W is used as PWM) (1=UVW is operating, I is used as PWM)
DAECDIS	R/W/P	4	Disable dynamic angle error compensation (0=DAE compensation ON, 1=DAE compensation OFF)
ABI_DEC	R/W/P	5	ABI setting to decimal count
Data_select	R/W/P	6	This bit defines which data can be read from address 16383dec (3FFFhex) 0 -> ANGLECOM 1-> ANGLEUNC
PWMon	R/W/P	7	Enables PWM(setting of UVW_ABI bit necessary)

Table 39 SETTINGS3(0x001A)

Name	Read/Write/Program	Bit Position	Description
UVWPP	R/W/P	2:0	UVW number of pole pairs
HYS	R/W/P	4:3	Hysteresis
ABIRES	R/W/P	7:5	Resolution of ABI

Table 40 ECC(0x001B)

Name	Read/Write/Program	Bit Position	Description
Ecc_chsum	R/W/P	6:0	ECC checksum
Ecc_en	R/W/P	7	Enables ECC

6.8 ABI incremental interface

The AS5x47U can send the angle position to the host microcontroller through an incremental interface. This interface is available simultaneously with the other interfaces. By default, the incremental interface is set to work at a 12-bit resolution which corresponds to 4096 steps per revolution or 1024 pulses per revolution (ppr). This resolution can be changed with the OTP bits ABIRES. The phase shift between the A and B signals indicates the rotation direction: clockwise (A leads, B follows) or counterclockwise (B leads, A follows). During the start-up time, after power on to the chip, all three ABI signals are high. The DIR bit can be used to invert the sense of the rotation direction.

The IWIDTH setting programs the width of the index pulse from 3 LSB (default) to 1 LSB.

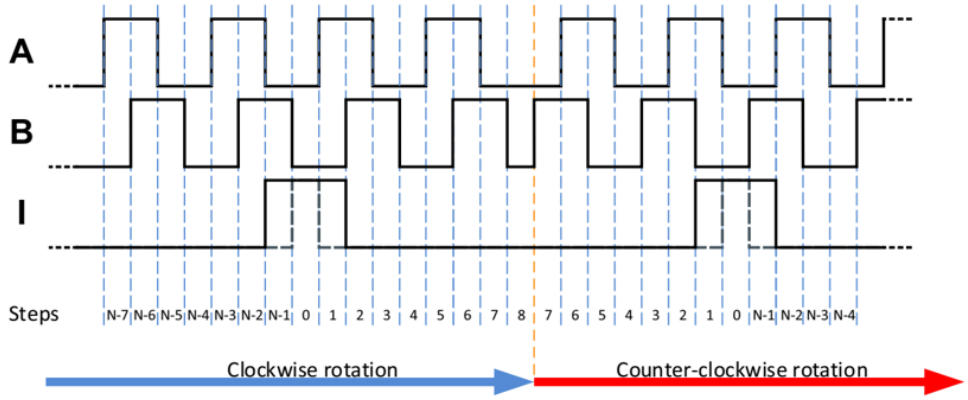

Figure 12 ABI signals

N= 16384 for 14-bit resolution, N = 4096 for 12-bit resolution and N = 1024 for 10-bit resolution..

The Figure 12 shows the ABI signal flow if the magnet rotates in clockwise direction and counter-clockwise direction (DIR=0).

The rotation direction of the magnet is defined as clockwise (DIR=0) when the view is from the topside of AS5x47U.

Table 41 ABI settings

ABIRES [LSB] SETTINGS3(0x001A)	ABI_DEC SETTINGS2(0x0019)	ABI_Pulses	ABI Resolution [LSB]
100	0	4096	16384
011	0	2048	8192
000	0	1024	4096 (default value)
001	0	512	2048
010	0	256	1024
000	1	1000	4000
001	1	500	2000
010	1	400	1600
011	1	300	1200
100	1	200	800
101	1	100	400
110	1	50	200
111	1	25	100

6.8.1 UVW commutation interface

The AS5x47U can emulate the UVW signals generated by the three discrete Hall switches commonly used in BLDC motors. The UVWPP field in the SETTINGS3 register selects the number of pole pairs of the motor (from 1 to 7 pole

pairs). The UVW signals are generated with 14-bit resolution. During the start-up time, after power on of the chip, the UVW signals are low.

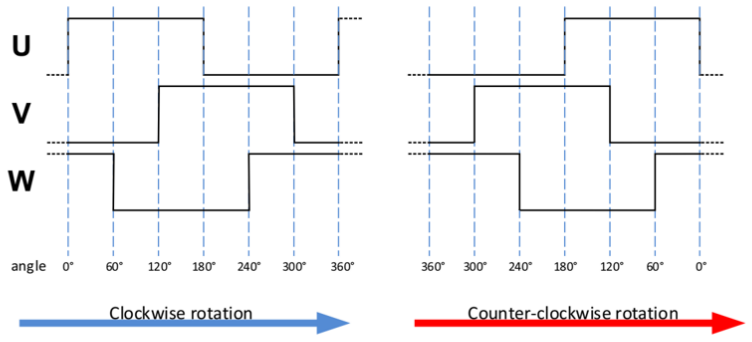

Figure 13 UVW signals

The Figure 13 shows the UVW signal flow if the magnet rotates in clockwise direction and counter-clockwise direction (DIR=0). The rotation direction of the magnet is defined as clockwise (DIR=0) when the view is from the topside of AS5x47U. With the bit DIR, it is possible to invert the rotation direction.

Table 42 UVW settings

UVWPP [LSB]	Pole Pairs
000	1pp (default)
001	2pp
010	3pp
011	4pp
100	5pp
101	6pp
110	7pp
111	7pp

6.8.2 PWM

The PWM can be enabled with the bit setting PWMon. The PWM encoded signal is displayed on the pin W or the pin I. The bit setting UVW_ABI defines which output is used as PWM. The PWM output consists of a frame of 4119 PWM clock periods, as shown in Figure 14.The PWM frame has the following sections:

- 12 PWM Clocks for INIT
- 4 PWM Clocks for error detection
- 4095 PWM clock periods of data
- 8 PWM clock periods low

The angle is represented in the data part of the frame with a 12-bit resolution. One PWM clock period represents 0.088 degree and has a typical duration of 444 ns.

If the embedded diagnostic of the AS5x47U detects any error the PWM interface displays only 12 clock periods high (0.3% duty-cycle). Respectively the 4 clocks for error detection are forced to low.

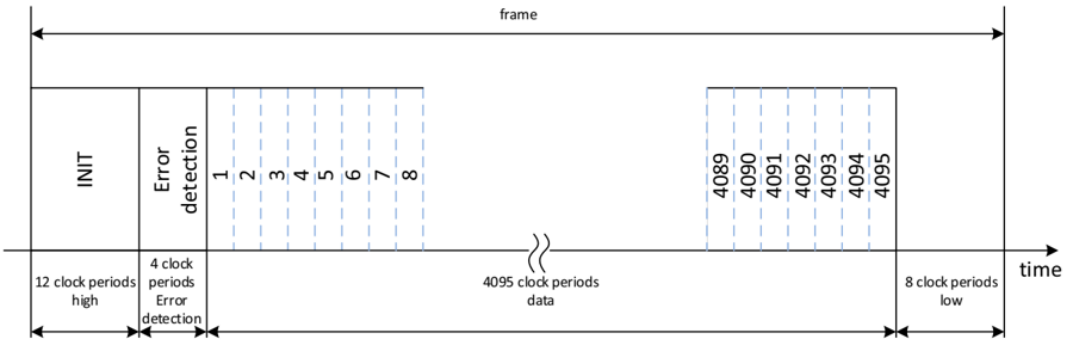

Figure 14 Pulse width modulation encoded signal

6.9 Hysteresis

The hysteresis can be programmed in the HYS bits of the SETTINGS3 register. The hysteresis can be 1, 2, or 3 LSB bits, in which the LSB is defined by the ABI resolution setting (ABIRES).

Table 43 Hysteresis settings

HYS	Hysteresis Related to 11-Bit ABI Resolution
00	1
01	2
10	3
11	0

6.10 Automatic gain control (AGC) and CORDIC magnitude

The AS5x47U uses AGC to compensate for variations in the magnetic field strength due to changes of temperature, air gap between the chip and the magnet, and demagnetization of the magnet. The automatic gain control value can be read in the AGC field of the AGC register. Within the specified input magnetic field strength (Bz), the Automatic Gain Control keeps the CORDIC magnitude value (MAG) constant.

If magnetic field strength is out of specifications, the AGC has its limits reached and the Agc-warning bit is set. When the magnetic field strength is decreasing more then AGC can control, the CORDIC magnitude is also decreasing.

If the CORDIC magnitude decreases lower than half of the target magnet, the error flag MagHalf_flag is set

6.11 Functional safety

6.11.1 Safety manual

The safety manual, available upon request, contains all the necessary information for the system integrator, to integrate AS5147U or AS5247U in a safety related item.

AS5147U and AS5247U are developed as Safety Element out of Context (SEooC).

The Safety manual includes the following information:

- Product development lifecycle
- Description of the technical safety concept
- Detail information of assumption of use of the element with respect to its intended use which includes
  - Device safe state information
  - Fault tolerant time interval
  - Coverage information

Additionally, beside the safety manual, a verification summary document is available upon request. This document includes all safety verification and the summary of the safety analyses information.

An additional document (Verification and Safety Analysis report) which is part of the safety manual includes the following information:

- Description of safety analysis at device level
- HW architectural metric results
- Description of verifications based on the ISO26262
- Detailed FMEDA

6.11.2 Safety mechanism

AS5147U and AS5247U provide several self-diagnostic features (Safety Mechanism) which increases the safety coverage.

Table 44 Safety mechanism

SM	Mechanism	Programmable UVW/ABI	SPI	PWM	UVW/ABI
SM1	Offset compensation	Yes, with Dia1_en (default off)	Bit in DIA register	According chapter PWM	UVW:000 ABI:111
SM2	AGC	Yes, with Dia3_en (default off)	Bit in DIA register	According chapter PWM	UVW:000 ABI:111
SM3	CORDIC overflow	-	Bit in DIA register	According chapter PWM	UVW:000 ABI:111
SM4	Broken Hall element	Yes, with Dia4_en (default off)	Bit in DIA register	According chapter PWM	UVW:000 ABI:111
SM5	ECC		Bit in DIA register	According chapter PWM	UVW:000 ABI:111
SM6	CRC error	-	SPI only	N/A	N/A
SM7	Watchdog	-	No communication	According chapter PWM	UVW:000 ABI:111

(table continues...)

Table 44 (continued) Safety mechanism

SM	Mechanism	Programmable UVW/ABI	SPI	PWM	UVW/ABI
SM8	Magnitude half	Yes, with Dia2_en (default off)	Bit in DIA register	According chapter PWM	UVW:000 ABI:111

If an error happens, depending on the OTP setting, the outputs are going into the defined safe states. Additionally, each SPI data frame indicates the failure with the error and warning flag.

In case UVW/ABI interface should provide in case of an error the safe state, a programming option is included.

A detailed information about the different safety mechanism are included in the safety manual.

6.11.3 Broken hall element function

The broken Hall element detection (SM4), detects an error in the Hall element and the complete analog chain.

Additionally this feature can detect an increase of the system INL.

The threshold of the safety mechanism is programmable in case the system INL is higher than expected. The threshold value according the safety manual is 1024 LSB. A change of this threshold might be an influence on the safety requirement. The safety mechanism is disable in default use.

Table 45 BRK threshold settings

BRKHALL_SET [LSB] DISABLE (0x0015)	SM4 Threshold
0000	SM4 Off
0001	256
0010	512
0011	768
0100	1024
1000	2048
1111	3840

The threshold information shall be programmed into the BRKHALL_SET, if the safety mechanism is used.

Detailed information about "System INL vs. Threshold" is available upon request.

6.11.4 ECC

The ECC (Error Code Correction) is a mechanism which protects the customer settings.

The ECC protection is active whenever ECC_en = 1. ECC_en is the error corrected counterpart of the P2RAM bit en and is found in register ECC_STATUS. Whenever a bit error occurs, this is reported by the status register ERRFL [2:3]. Single bit errors are corrected immediately and do not influence the correct operation of the sensor. If either a single or double errors are detected, the next SPI MISO frame will report this to the software by setting flags error = 1 (double bit error) or warning = 1 (single bit error). Warning and error are sticky flags, which guarantees that spurious P2RAM errors are certainly reported.

The ECC protection is activated with the following steps:

- Writing uses data into the register and set ECC_en to high
- Reading ECC_s from register 0x3FD0 and set the value into ECC_chsum. Do not overwrite the ECC_en
- Programming the part

7 Application information

7.1 Burn and verification of the OTP memory

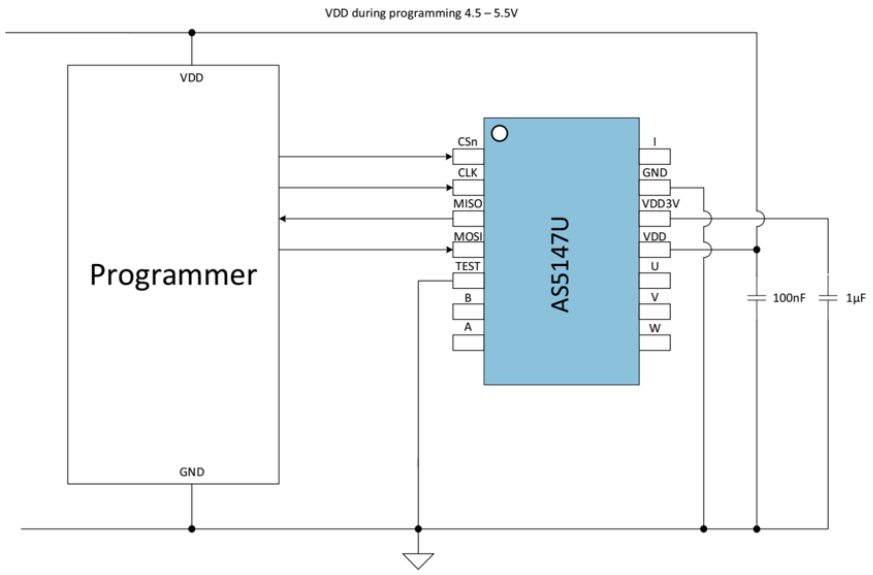

Figure 15 **Minimum programming diagram for the AS5147U with 5V supply voltage**

***Notes**:*

1. *In terms of EMC and for remote application, additional circuits are necessary*

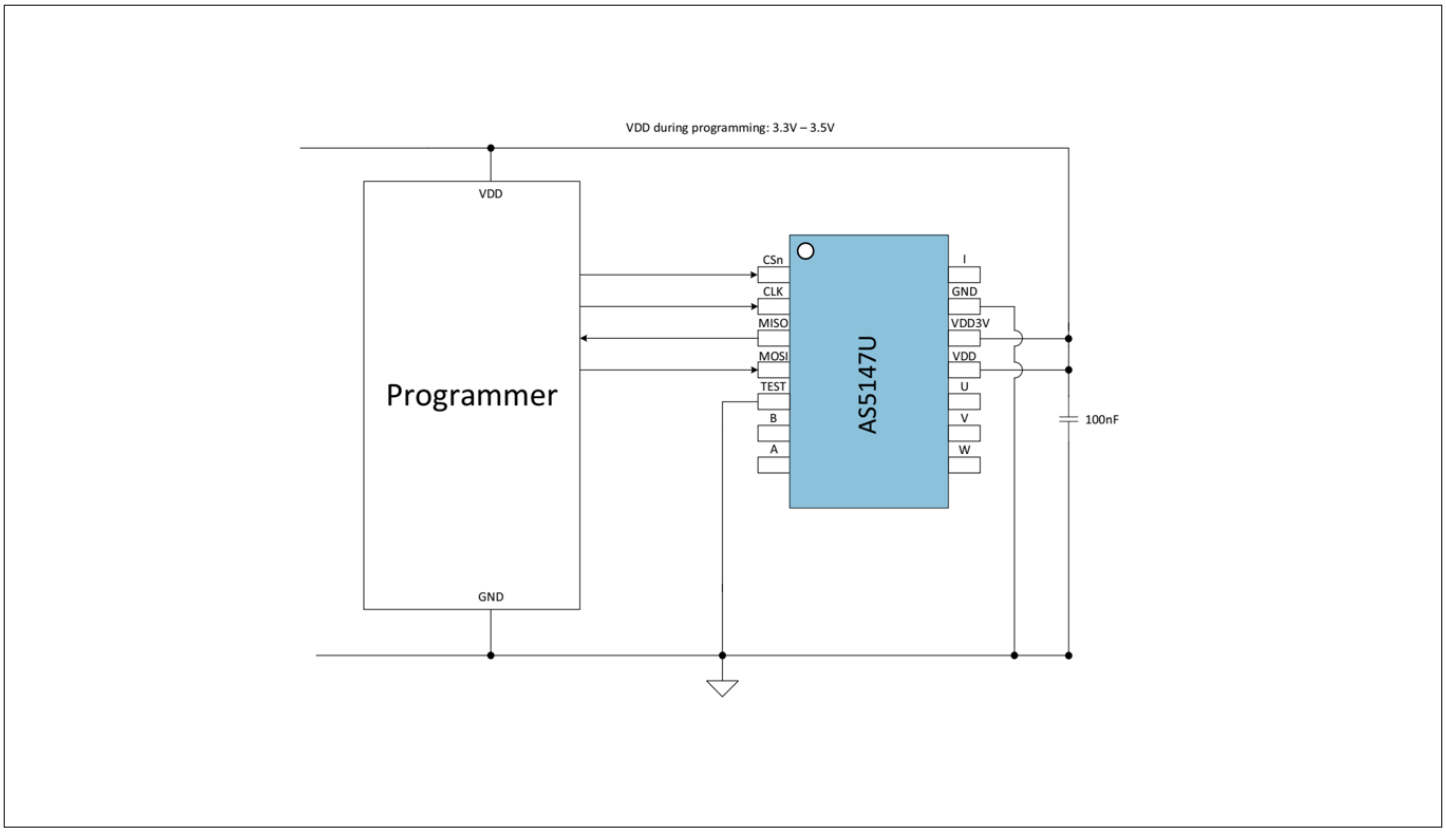

Figure 16 **Minimum programming diagram for the AS5147U with 3.3V supply voltage**

***Notes**:*

1. *In terms of EMC and for remote application, additional circuits are necessary*

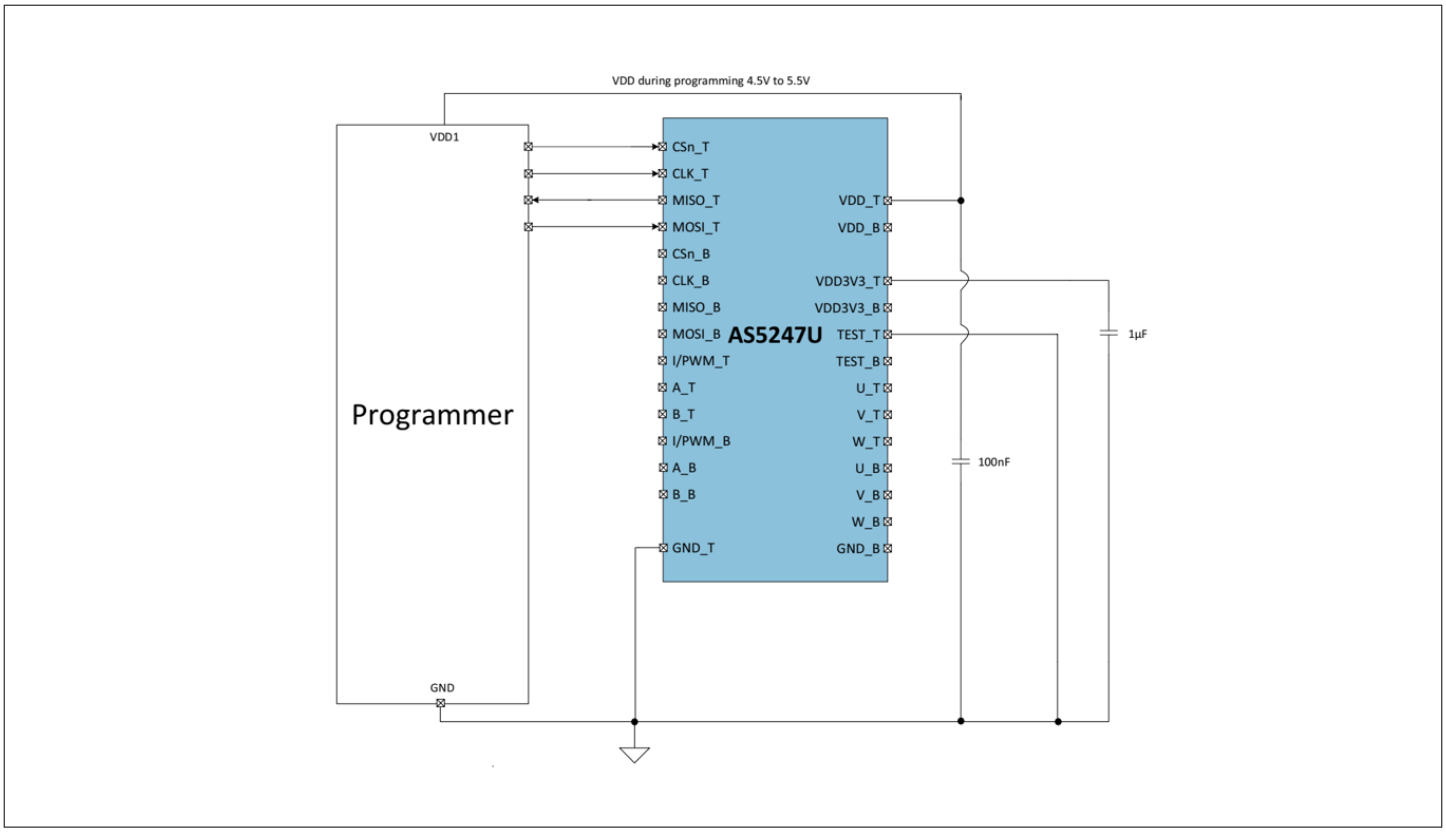

Figure 17 **Minimum programming diagram for AS5247U with 5 V supply voltage**

Notes:

1. *In terms of EMC and for remote application, additional circuits are necessary*
2. *Diagram shows only the connection to top die of AS5247U. For programming of bottom die the following pins have to be connected instead of the connection in the drawing: CSn_B, CLK_B, MISO_B, MOSI_B,GND_B,VDD_B, VDD3V3_B,TEST_B*

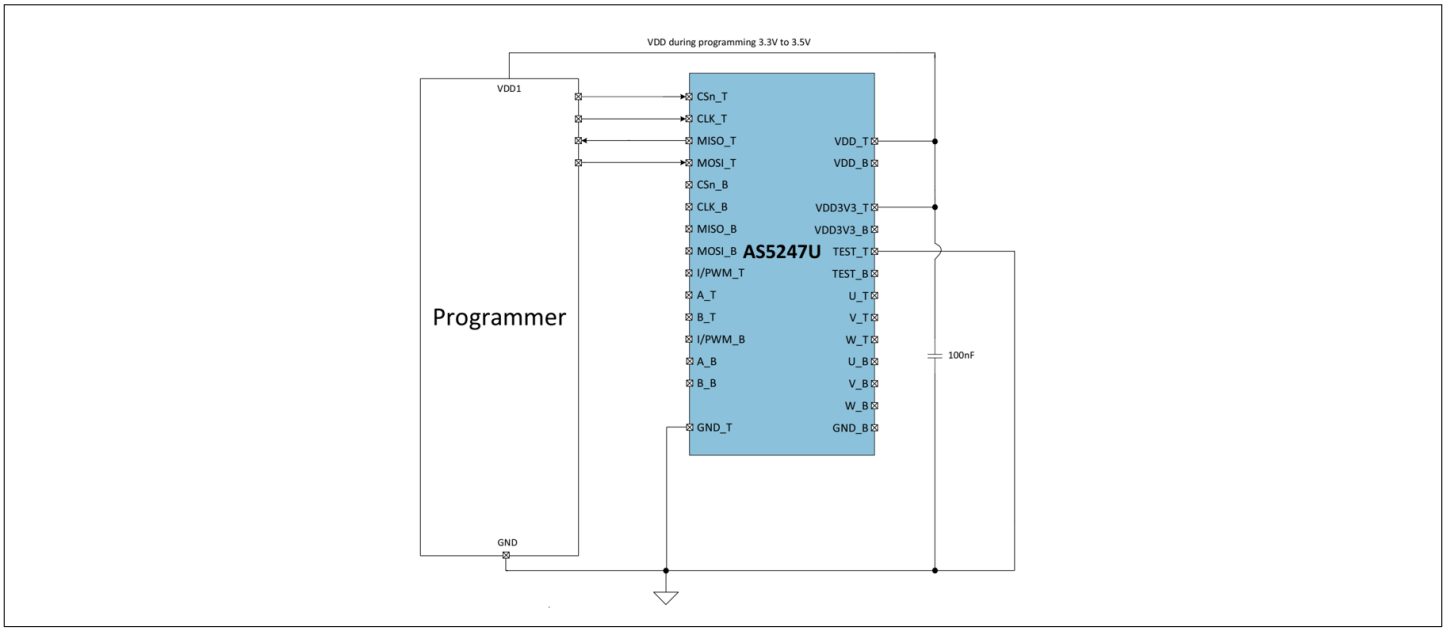

Figure 18 **Minimum programming diagram for the AS5247U with 3.3V supply voltage**

***Notes**:*

1. *In terms of EMC and for remote application, additional circuits are necessary*
2. *Diagram shows only the connection to topdie of AS5247U. For programming of bottom die the following pins have to be connected instead of the connection in the drawing: CSn_B, CLK_B, MISO_B, MOSI_B,GND_B,VDD_B, VDD3V3_B,TEST_B*

Table 46 Programming parameter

Symbol	Parameter	Conditions	Min.	Typ.	Max.	Units
T_{aProg}	Programming temperature	Programming @room temperature (25°C ± 20°C)	5		45	°C
V_{DD}	Positive supply voltage	5 V operation mode. Supply voltage during programming	4.5	5	5.5	V
V_{DD}	Positive supply voltage	3.3 V operation mode. Supply voltage during programming	3.3		3.5	V
I_{Prog}	Current for programming	Max current during OTP burn procedure.			100	mA

***Note**: Programming parameter valid for AS5147U and AS5247U*

7.2 Step-by-step procedure to permanently program the non-volatile memory (OTP):

The programming can either be performed in 5 V operation using the internal LDO (1 µF on regulator output pin), or in 3 V operation but using a supply voltage between 3.3 V and 3.5 V.

1. Power on cycle
2. Write the SETTINGS1 and SETTINGS2 and SETTINGS3 registers with the custom settings for this application
3. Place the magnet at the desired zero position
4. Read out the measured angle from the ANGLECOM register
5. Write ANGLECOM [5:0] into the ZPOSL register and ANGLECOM[13:6] into the ZPOSM register
6. Read Reg(0x0015) to Reg(0x001A)
7. Set ECC_en in register ECC to 1 (ECC protection enabled)
8. Read ECC_s (0x3FD0) to get the correct ECC key
9. Write ECC_s key into ECC register
10. Set ECC_en in register ECC to 1 (ECC protection enabled)
11. Read Reg(0x0015) to Reg(0x001B) → read register step1
12. Comparison of written content (settings and angle) with content of read register step1
13. If point 11 is correct, enable OTP read/write by setting PROGEN = 1 in the PROG register
14. Start the OTP burn procedure by setting PROGOTP = 1 in the PROG register
15. Read the PROG register until it reads 0x0001 (programming procedure complete)
16. Clear the memory content by writing 0x00 in the whole non-volatile memory
17. Set the PROGVER = 1 to set the guard band for the guard band test[1)]

[1] Guard band test:
Restricted to temperature range: 25 °C ± 20 °C

18. Refresh the non-volatile memory content with the OTP content by setting OTPREF = 1
19. Read Reg(0x0015) to Reg(0x001B) → Read register step2
20. Comparison of written content (settings and angle) with content of read register step2. If a deviation in the comparison occurs, the guard band test was not successful. Reprogramming is not allowed. Mandatory: guard band test
21. New power on cycle
22. Read Reg(0x0016) to Reg(0x001B) → read register step3
23. Comparison of written content (settings and angle) with content of read register step3. If a deviation in the comparison occurs, the power on test was not successful. Reprogramming is not allowed
24. If point 19 is correct, the programming was successful
25. Repeat point 1 to point 20 in case an AS5247U is used

Right after the programming procedure (max. 1 hour with same conditions 25°C ± 20 °C), same VDD voltage

The guard band test is only for the verification of the burned OTP fuses during the programming sequence. A use of the guard band in other cases is not allowed

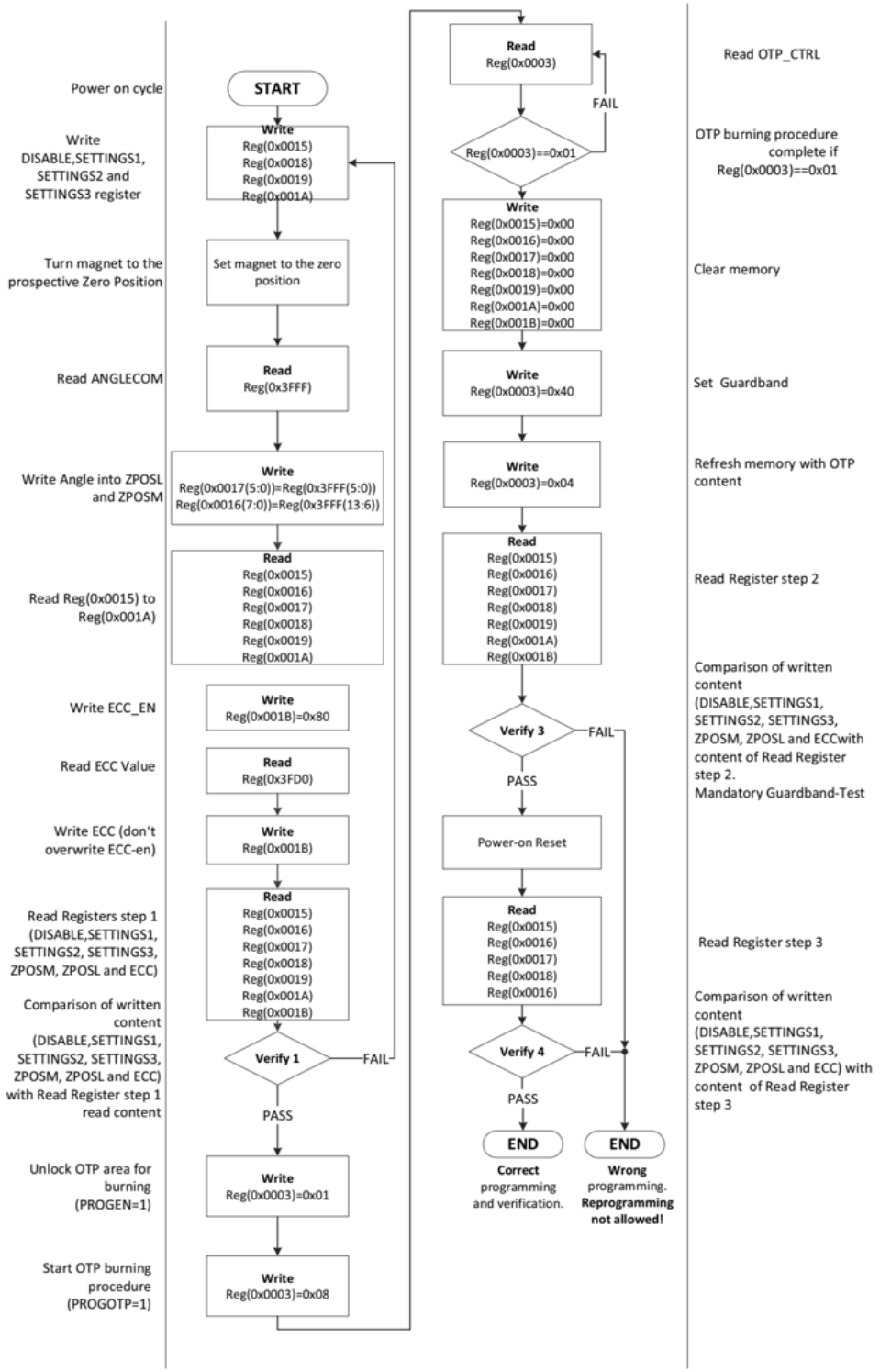

Figure 19 **OTP memory burn and verification flowchart**

***Notes**:*

1. *This procedure has to be done twice, for the top die and for the bottom die*
2. *Device with wrong programming must not be used. Scrapping mandatory*

7.3 Circuit diagram

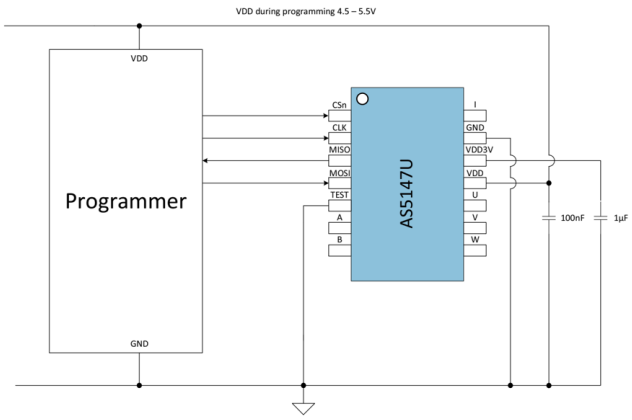

Figure 20 Minimum circuit diagram for the AS5147U

***Note**: In terms of EMC and for remote application, additional protection circuit is necessary*

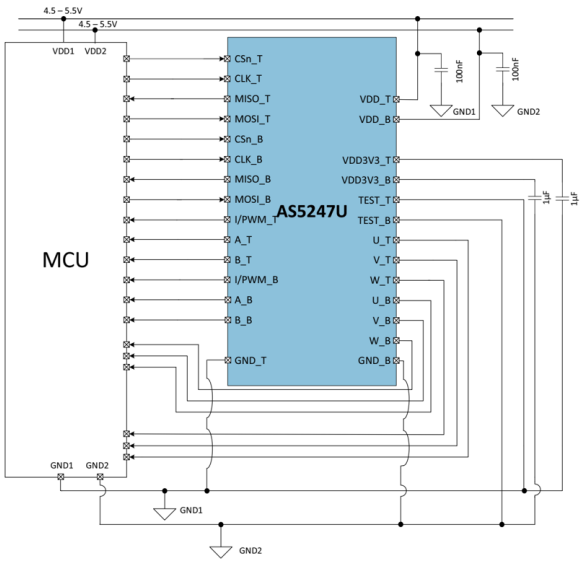

Figure 21 Minimum circuit diagram for the AS5247U

***Note**: This application block diagram is showing the AS5247U using in a full redundant application. In terms of EMC and for remote application, additional protection circuit is necessary.*

8 Package drawings & markings

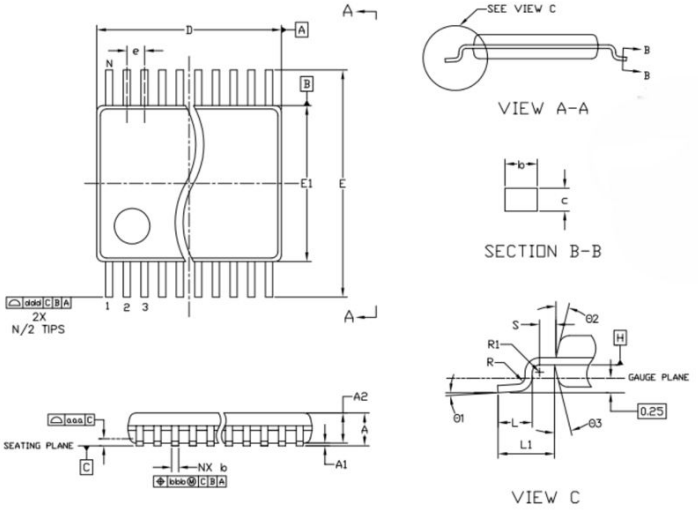

Symbol	Min	Nom	Max
A	-	-	1.20
A1	0.05	-	0.15
A2	0.80	1.00	1.05
b	0.19	-	0.30
c	0.09	-	0.20
D	4.90	5.00	5.10
E	-	6.40 BSC	-
E1	4.30	4.40	4.50
e	-	0.65 BSC	-
L	0.45	0.60	0.75
L1	-	1.00 REF	-

Symbol	Min	Nom	Max
R	0.09	-	-
R1	0.09	-	-
S	0.20	-	-
Θ1	0°	-	8°
Θ2	-	12 REF	-
Θ3	-	12 REF	-
aaa	-	0.10	-
bbb	-	0.10	-
ccc	-	0.05	-
ddd	-	0.20	-
N		14	

Figure 22 TSSOP14 package outline drawing AS5147U

***Notes**:*

1. *Dimensioning and tolerancing conform to ASME Y14.5M - 1994*

2. *All dimensions are in millimeters. Angles are in degrees*

3. *N is the total number of terminals*

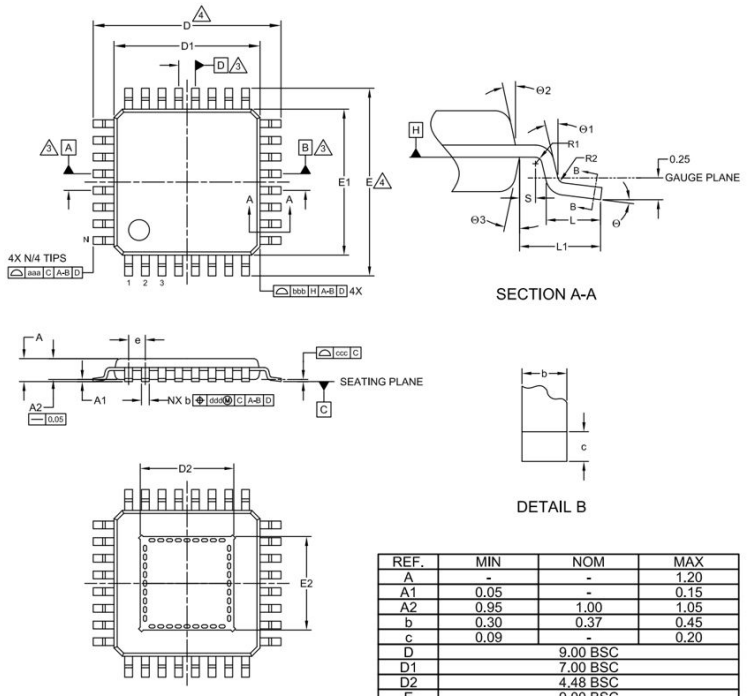

REF.	MIN	NOM	MAX
A	-	-	1.20
A1	0.05	-	0.15
A2	0.95	1.00	1.05
b	0.30	0.37	0.45
c	0.09	-	0.20
D		9.00 BSC	
D1		7.00 BSC	
D2		4.48 BSC	
E		9.00 BSC	
E1		7.00 BSC	
E2		4.48 BSC	
e		0.80 BSC	
L	0.45	0.60	0.75
L1		1.00 REF	
R1	0.08	-	-
R2	0.08	-	0.20
S	0.20	-	-
Θ	0°	3.5°	7°
Θ1	0°	-	-
Θ2	11°	12°	13°
Θ3	11°	12°	13°
aaa	-	0.20	-
bbb	-	0.20	-
ccc	-	0.10	-
ddd	-	0.20	-
N		32	

Figure 23 TQFP32 packaging outline drawing AS5247U

***Notes**:*

1. *Dimensioning and tolerancing confirm to ASME Y14.5M-1994*
2. *All dimensions are in millimeters (angles in degrees)*
3. *Datums A-B and D to be determined at datum plane H*
4. *To be determined at seating datum plane C*
5. *N is the total number of terminals*

Figure 24 **Packaging code**

Figure 25 **AS5247U package marking**

Table 47 **Packaging code**

YY	WW	M	ZZ	@
Last two digits of the manufacturing year	Manufacturing week	Plant identifier	Free choice/ traceability code	Sublot identifier

9 Mechanical data

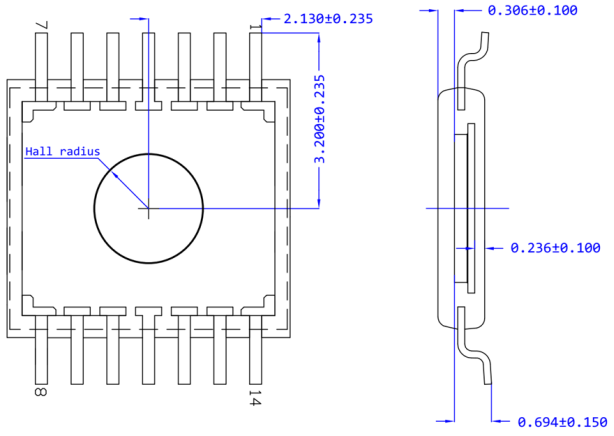

Figure 26 TSSOP14 die placement and hall array position

***Notes**:*

1. *Dimensions are in mm*
2. *The Hall array center is located in the center of the IC package. Hall array radius is 1.1 mm*
3. *Die thickness is 203 µm nominal*

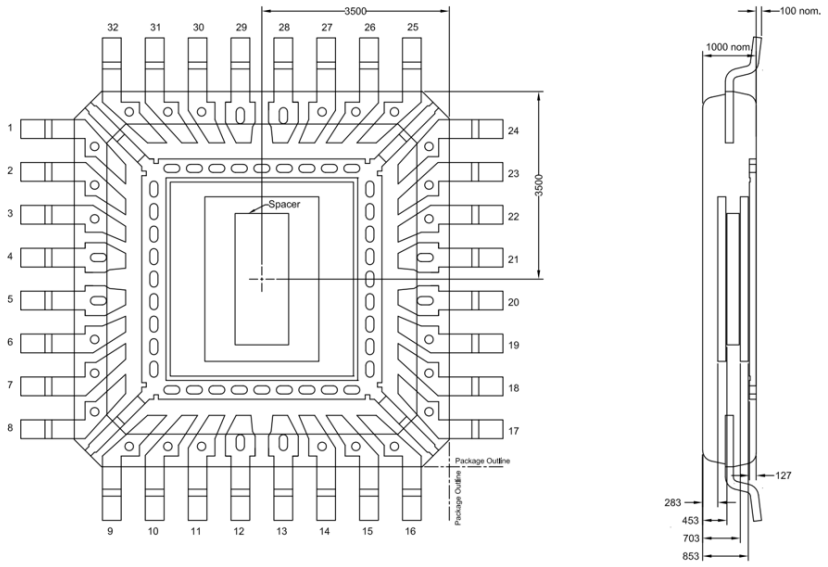

Figure 27 **TQFP32 die placement and hall array position**

Notes:

1. *All dimensions are in µm*
2. *Die thickness: 150 µm nom*
3. *Adhesive thickness: 15 µm nom*
4. *Spacer thickness: 230 µm typ*
5. *The Hall array center is located in the center of the IC package. Hall array radius is 1.1 mm*

10 Ordering information

Product type (infineon)	Product type (ams)	Package	Marking	Delivery Form	Delivery Quantity
AS5147U-HTSM-TSSOP14	AS5147U-HTSM	TSSOP14	AS5147U	7" Tape & Reel in dry pack	500 pcs/reel
AS5147U-HTST-TSSOP14	AS5147U-HTST	TSSOP14	AS5147U	13" Tape & Reel in dry pack	4500 pcs/reel
AS5247U-HTQT	AS5247U-HTQT	TQFP32	AS5247U	13" Tape & Reel in dry pack	2000 pcs/reel

Revision history

Document revision	Date	Description of changes
1.00	2026-09-10	Document rebranded from ams-OSRAM to Infineon; technical specifications remain unchanged. **Legacy ams changes from previous released version to revision v2-00** • Updated note under Figure 9 • Updated text under CRC Checksum and added Figure 33 • Updated Figure 60 • Updated Figure 61

Trademarks

All referenced product or service names and trademarks are the property of their respective owners.

Edition 2026-09-10

Published by

Infineon Technologies AG

81726 Munich, Germany

© 2026 Infineon Technologies AG

All Rights Reserved.

Do you have a question about any aspect of this document?

Email: erratum@infineon.com

Document reference
IFX-ejf1786682327504

Important notice

Products which may also include samples and may be comprised of hardware or software or both ("Product(s)") are sold or provided and delivered by Infineon Technologies AG and its affiliates ("Infineon") subject to the terms and conditions of the frame supply contract or other written agreement(s) executed by a customer and Infineon or, in the absence of the foregoing, the applicable Sales Conditions of Infineon. General terms and conditions of a customer or deviations from applicable Sales Conditions of Infineon shall only be binding for Infineon if and to the extent Infineon has given its express written consent.

For the avoidance of doubt, Infineon disclaims all warranties of non-infringement of third-party rights and implied warranties such as warranties of fitness for a specific use/purpose or merchantability. Infineon shall not be responsible for any information with respect to samples, the application or customer's specific use of any Product or for any examples or typical values given in this document.

If this document is marked as 'Preliminary', 'Target', 'Draft' or 'Proposal', Infineon reserves the right to change all information given in this document at any time without notice. Subject to the development and release of a Product for series supply by Infineon, the technical specifications of the Product are set forth in the relevant datasheet provided by Infineon without such marking.

The data contained in this document is exclusively intended for technically qualified and skilled customer representatives. It is the responsibility of the customer to evaluate the suitability of the Product for the intended application and the customer's specific use and to verify all relevant technical data contained in this document in the intended application and the customer's specific use. The customer is responsible for properly designing, programming, and testing the functionality and safety of the intended application, as well as complying with any legal requirements related to its use.

Unless otherwise explicitly approved by Infineon, Products may not be used in any application where a failure of the Products or any consequences of the use thereof can reasonably be expected to result in personal injury.

However, the foregoing shall not prevent the customer from using any Product in such fields of use that Infineon has explicitly designed and sold it for, provided that the overall responsibility for the application lies with the customer. Infineon expressly reserves the right to use its content for commercial text and data mining (TDM) according to applicable laws, e.g. Section 44b of the German Copyright Act (UrhG). If the Product includes security features:

Because no computing device can be absolutely secure, and despite security measures implemented in the Product, Infineon does not guarantee that the Product will be free from intrusion, data theft or loss, or other breaches ("Security Breaches"), and Infineon shall have no liability arising out of any Security Breaches.

If this document includes or references software:

The software is owned by Infineon under the intellectual property laws and treaties of the United States, Germany, and other countries worldwide. All rights reserved. Therefore, you may use the software only as provided in the software license agreement accompanying the software.

If no software license agreement applies, Infineon hereby grants you a personal, non-exclusive, non-transferable license (without the right to sublicense) under its intellectual property rights in the software (a) for software provided in source code form, to modify and reproduce the software solely for use with Infineon hardware products, only internally within your organization, and (b) to distribute the software in binary code form externally to end users, solely for use on Infineon hardware products. Any other use, reproduction, modification, translation, or compilation of the software is prohibited.

For further information on the Product, technology, delivery terms and conditions, and prices, please contact your nearest Infineon office or visit www.infineon.com.