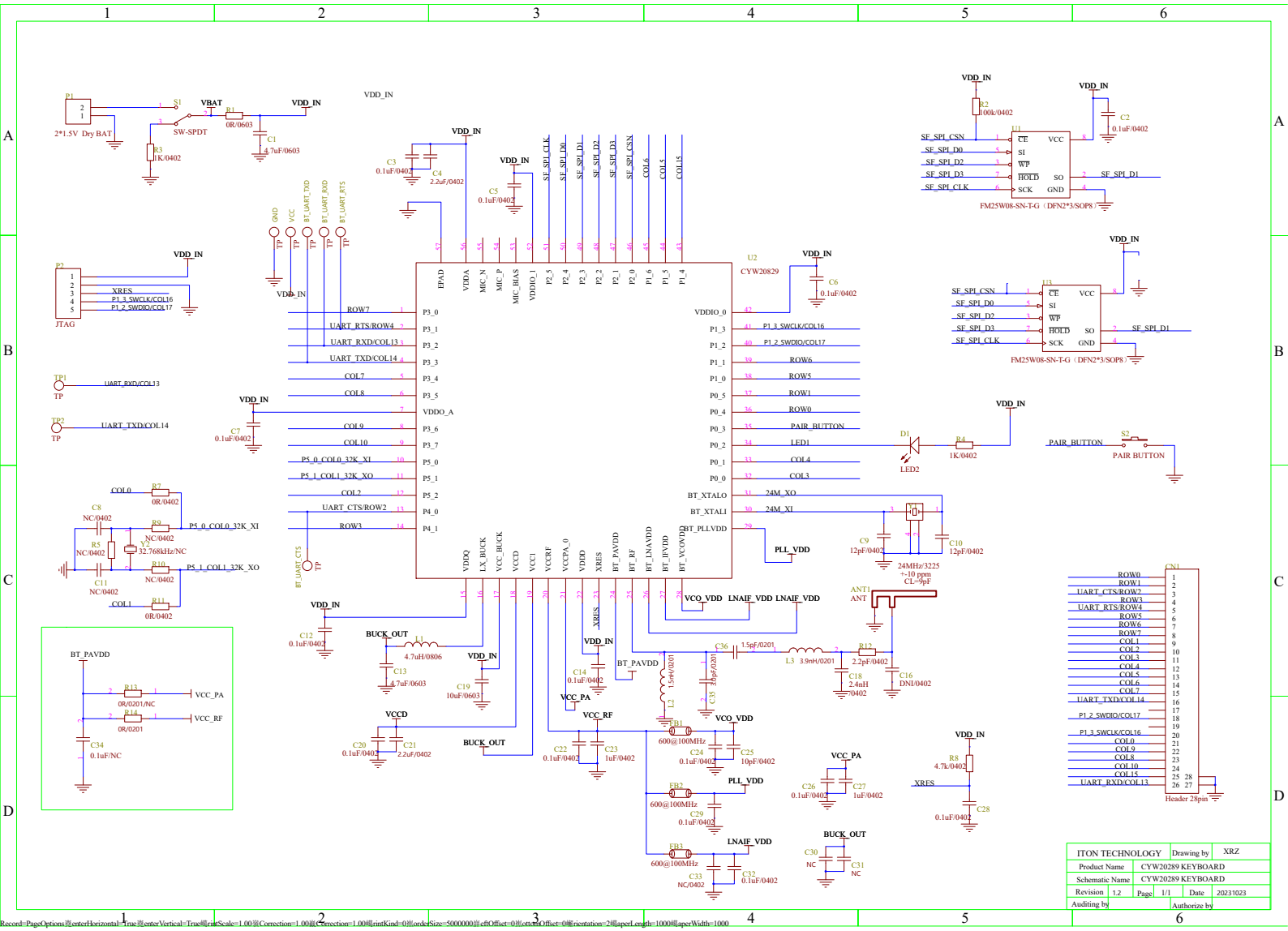

Record=PageOptions⿰enterHorizontal=True⿰enterVertical=True⿰printScale=1.00⿱Correction=1.00⿱Correction=1.00⿰printKind=0⿰orderSize=5000000⿰eftOffset=0⿰ottomOffset=0⿰rientation=2⿰aperLength=1000⿰aperWidth=1000