# CY3280-SMARTSENSE

# REV **

PCB: PDC-09587
PCA: 120-09587-1

CYPRESS SEMICONDUCTOR © 2010

| | | |
|---|---|---|
| Title | CY3280-SMARTSENSE | |
| Size B | Document Number REF-15110 | Rev ** |
| Date: Tuesday, November 23, 2010 | Sheet 1 of 3 | |

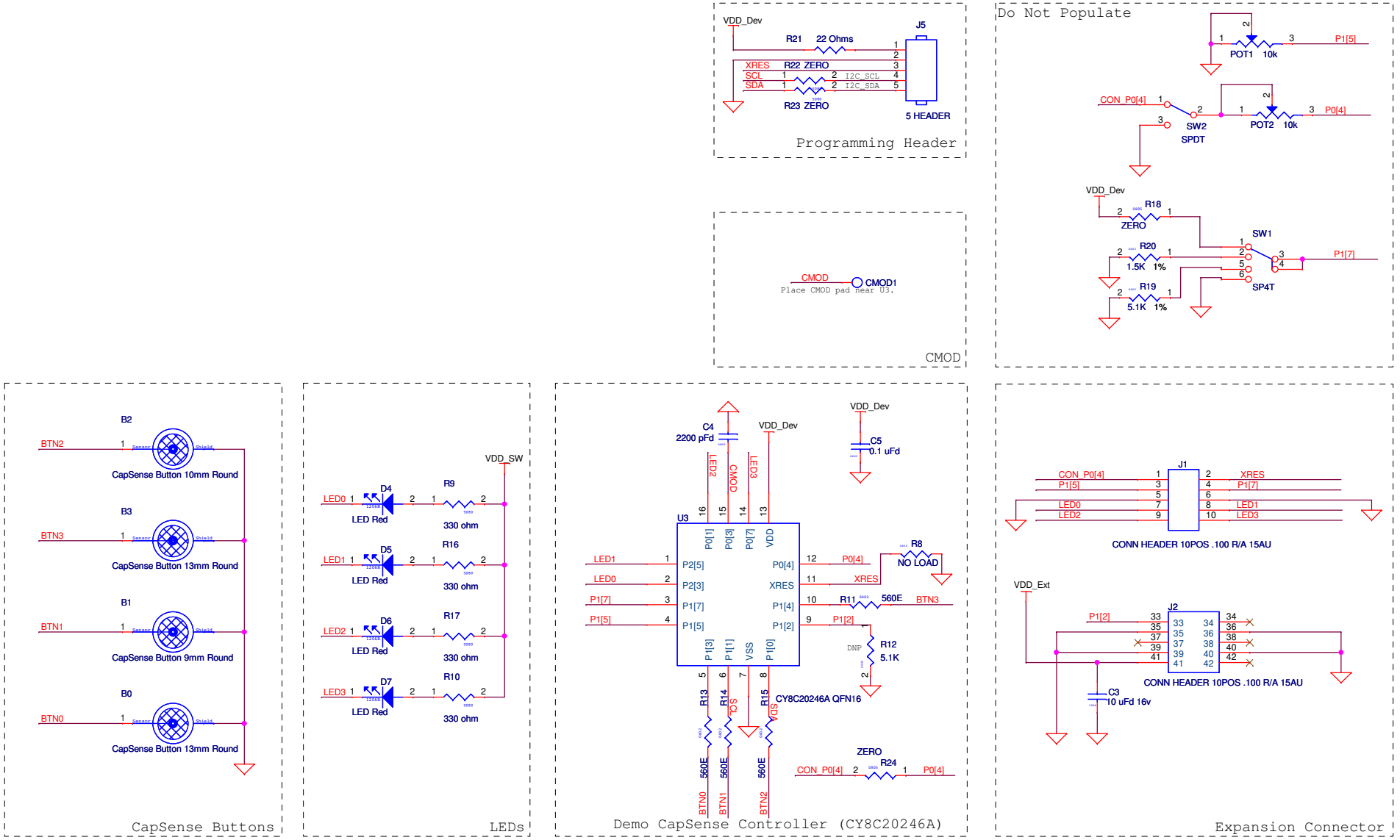


PCB: PDC-09587
PCA: 120-09587-1

| CYPRESS SEMICONDUCTOR © 2010 | | |
|---|---|---|
| Title: CY3280-SMARTSENSE | | |
| Size: B | Document Number: REF-15110 | Rev: ** |
| Date: Tuesday, November 23, 2010 | Sheet 2 of 3 | |

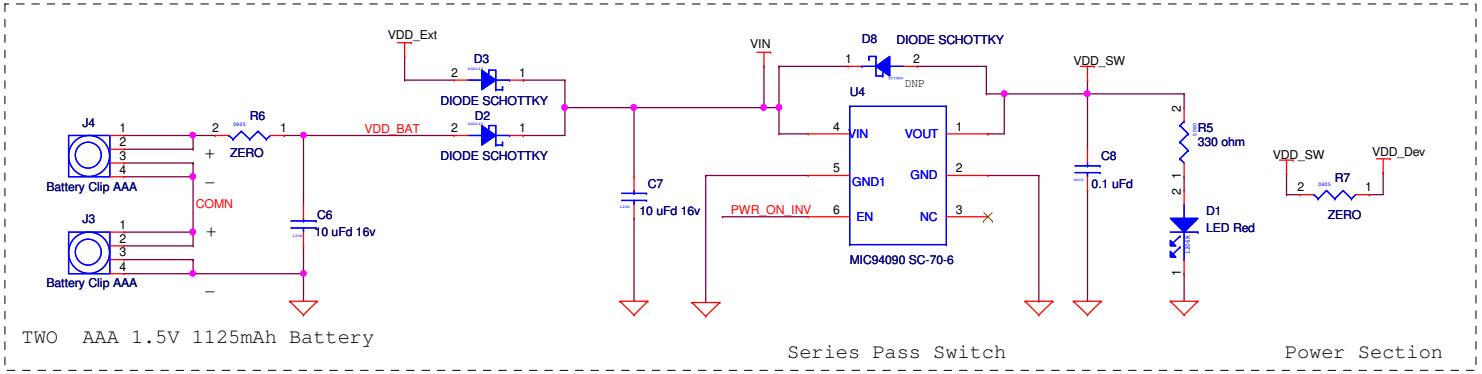


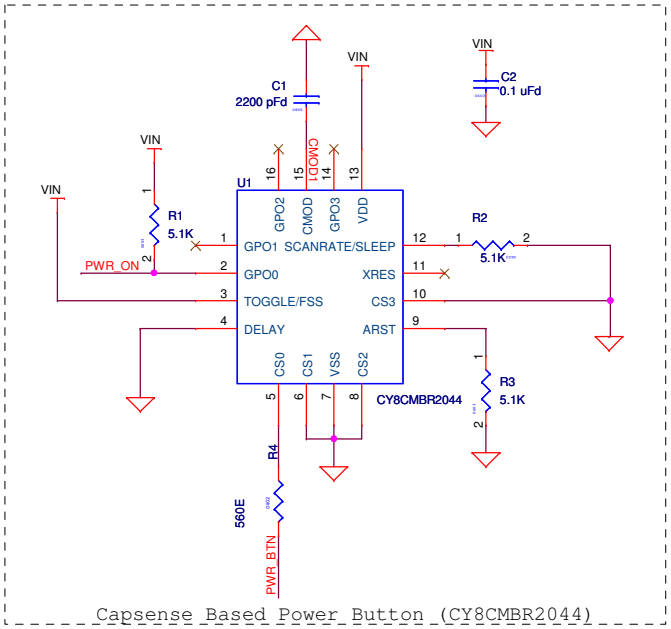


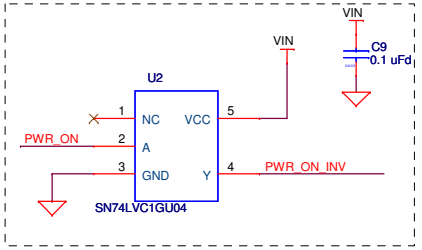


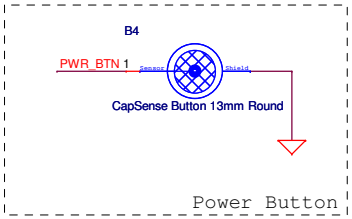


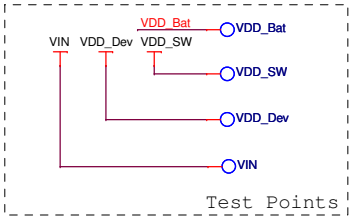


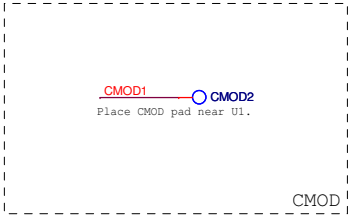


PCB: PDC-09587
PCA: 120-09587-1

| CYPRESS SEMICONDUCTOR © 2010 | | |
|---|---|---|
| Title: CY3280-SMARTSENSE | | |
| Size: B | Document Number: REF-15110 | Rev: ** |
| Date: Tuesday, November 23, 2010 | Sheet 3 of 3 | |