Possible Combinations of Disc Devices and Heatsinks

applicable up to V_{RRM}	line voltage up to	BE/KK = Elements per Heatsink	for air cooling / for water cooling										
7000 V	2500 V	1	K0.05.7F	K0.05.7F	K0.05.7F		K0.05.7F		K0.05.7F				
		1							KE01	KE01	KE01	KE01	KE01
		2							KE02	KE02	KE02	KE02	
		2	K0.08.7F	K0.08.7F	K0.08.7F		K0.08.7F		K0.08.7F				
6000 V	2000 V	1	K0.05F	K0.05F	K0.05F		K0.05F		K0.05F	K0.048F	K0.048F		
		2	K0.08F, K0.92S	K0.08F, K0.92S	K0.08F, K0.92S		K0.08F, K0.92S		K0.08F, K0.92S				
2600 V	1500 V	2, 4, 6							K53, K63	K53, K63	K53, K63	K53, K63	K63
2200 V	690 V	1	K0.12F, K0.36S	K0.12F, K0.36S			K0.12F, K0.36S						
		2	K0.17F, K0.22F	K0.17F, K0.22F			K0.17F, K0.22F						
		2	K0.65S	K0.65S			K0.65S						
		2	K0.024W	K0.024W	K0.024W	K0.024W	K0.024W	K0.024W	K0.024W				
		2, 4, 6	KA20; KC20; KD20	KA20; KC20; KD20	KA20; KC20; KD20	KA20; KC20; KD20	KA20; KC20; KD20						
Outline			D41.14 T41.14	D50.14 T50.14	D57.26 T57.26	D60.8	D60.14 T60.14	D73.8	D75.26 T75.26	D100.26 T100.26	D110.26 T110.26 T110.35	D120.35 T120.35 T120.26	T150.35

KM 10

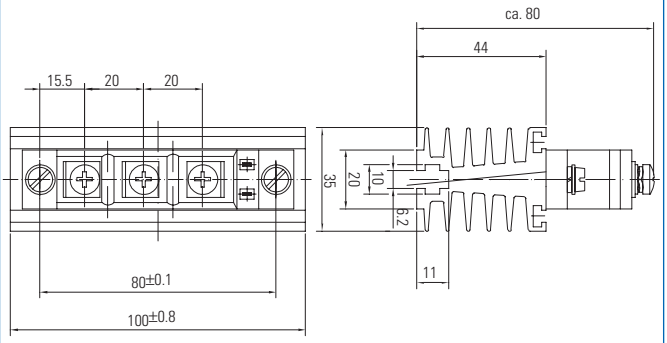

KM 11	G = 2,1 kg
KM 14	G = 3,1 kg
KM 17	G = 5,3 kg
KM 18	G = 8,8 kg

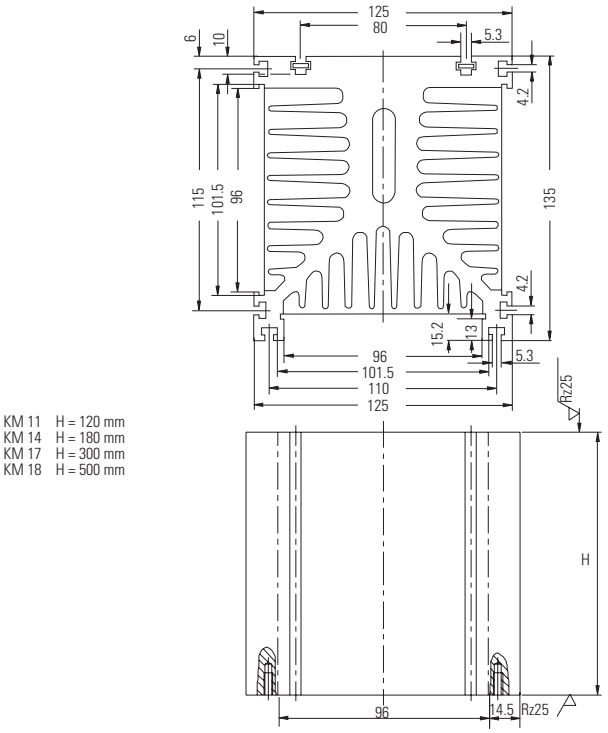

KM 11 H = 120 mm
KM 14 H = 180 mm
KM 17 H = 300 mm
KM 18 H = 500 mm

KA 20.X-V

for discs Ø 41, 50, 57, 60 mm
maximum clamping force 10 kN
supply voltage 500 Veff

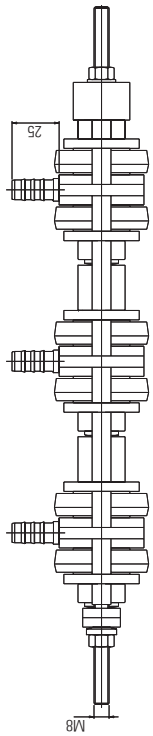

(...) for devices s=26

Anzahl d. Thy./Di.	Typ	L1	L2
6 (s=14mm)	-KA20 6-..	370	259
4 (s=14mm)	-KA20 4-..	280	168
2 (s=14mm)	-KA20 2-..	190	77
6 (s=26mm)	-KA20 62-..	445	331
4 (s=26mm)	-KA20 42-..	325	216
2 (s=26mm)	-KA20 22-..	210	101

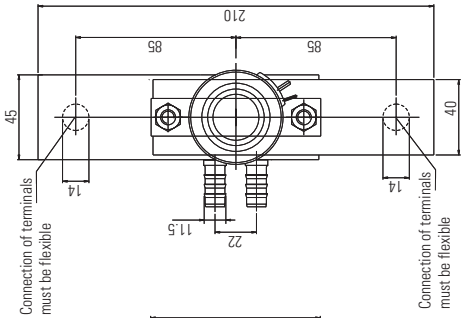

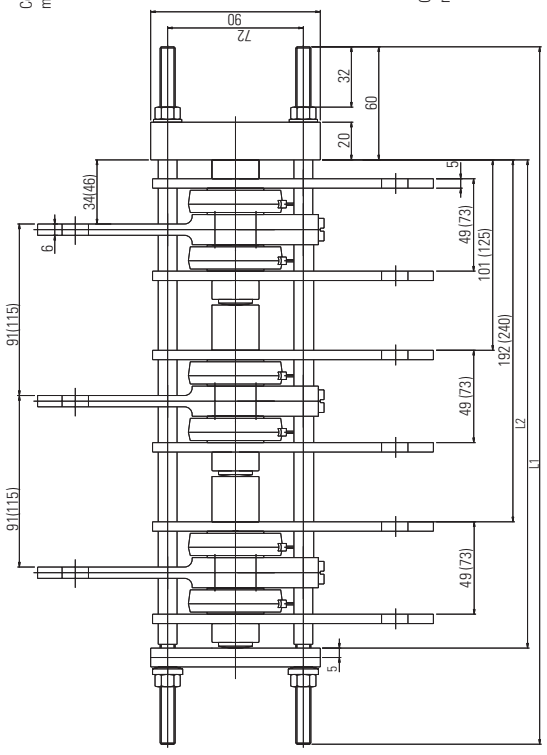

KC 20-XE

for discs Ø 41, 50, 57, 60 mm
maximum clamping force 10 kN
supply voltage 500 Veff

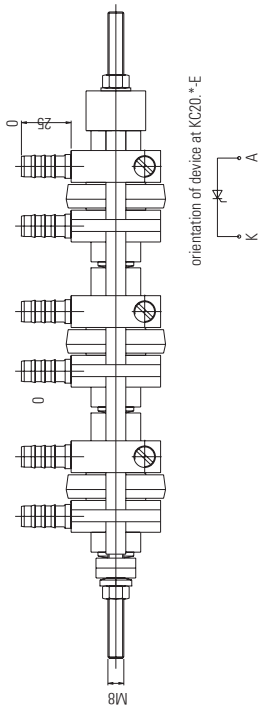

(...) for devices s=26

Anzahl d. Thy./Di.	Typ	L1	L2
3 (s=14mm)	-KC20-3E	325	215
2 (s=14mm)	-KC20-2E	250	142
1 (s=14mm)	-KC20-1E	175	69
3 (s=26mm)	-KC20-3E	360	251
2 (s=26mm)	-KC20-2E	275	166
1 (s=26mm)	-KC20-1E	190	81

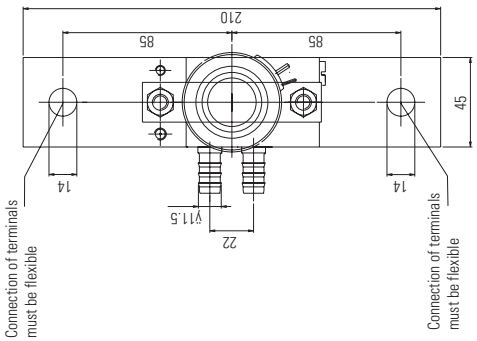

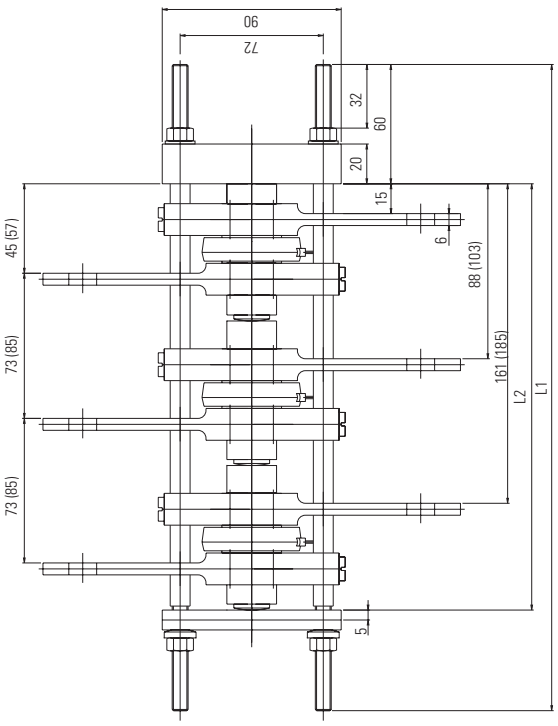

KD 20.X-V

for discs Ø 41, 50, 57, 60 mm
maximum clamping force 10 kN
supply voltage 500 Veff

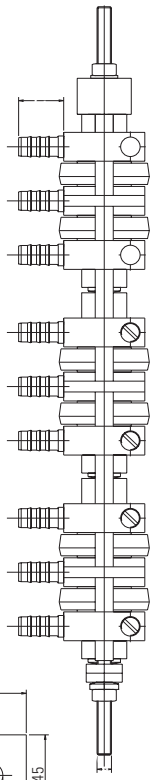

(...) for devices s=26

Anzahl d. Thy./Di.	Typ	L1	L2
6 (s=14mm)	-KD20.6-..	415	305
4 (s=14mm)	-KD20.4-..	310	202
2 (s=14mm)	-KD20.2-..	205	99
6 (s=26mm)	-KD20.62-..	490	377
4 (s=26mm)	-KD20.42-..	360	250
2 (s=26mm)	-KD20.22-..	230	123

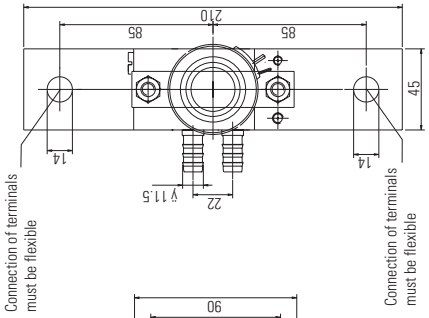

Connection of terminals must be flexible

Connection of terminals must be flexible

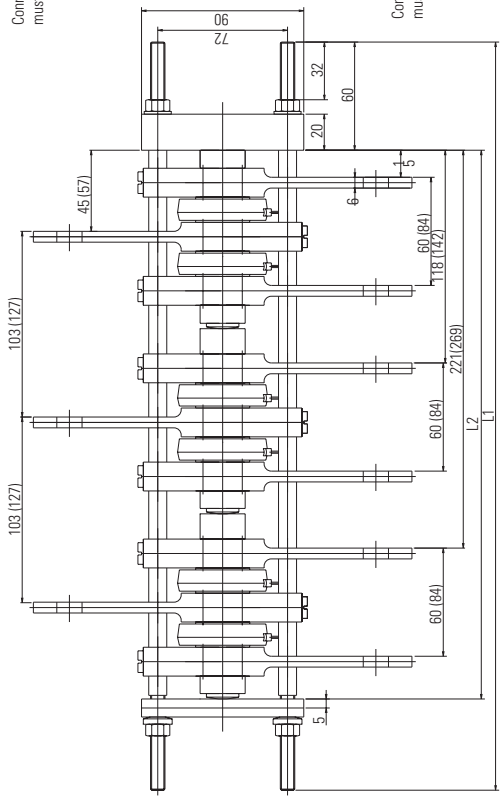

K 0.024 W — G = 3 kg

for W1C-circuits

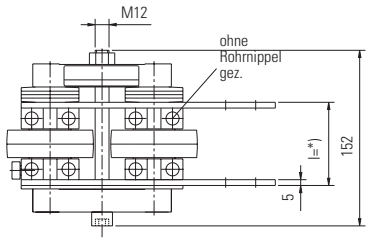

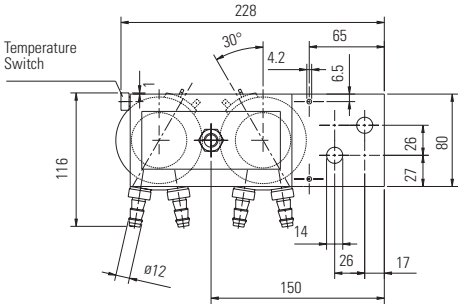

*) Device hight 14 mm: l=60mm
Device hight 26 mm: l=72mm

for discs Ø 50, 57, 60, 75 mm

K 0.024 W — G = 3 kg

for B- and M-circuits

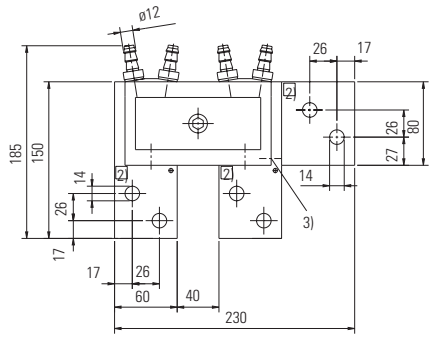

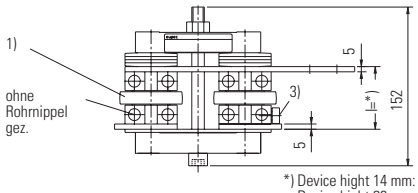

*) Device hight 14 mm: l=60mm
Device hight 26 mm: l=72mm

for discs Ø 50, 57, 60, 75 mm

K 53 V — G = 17 kg

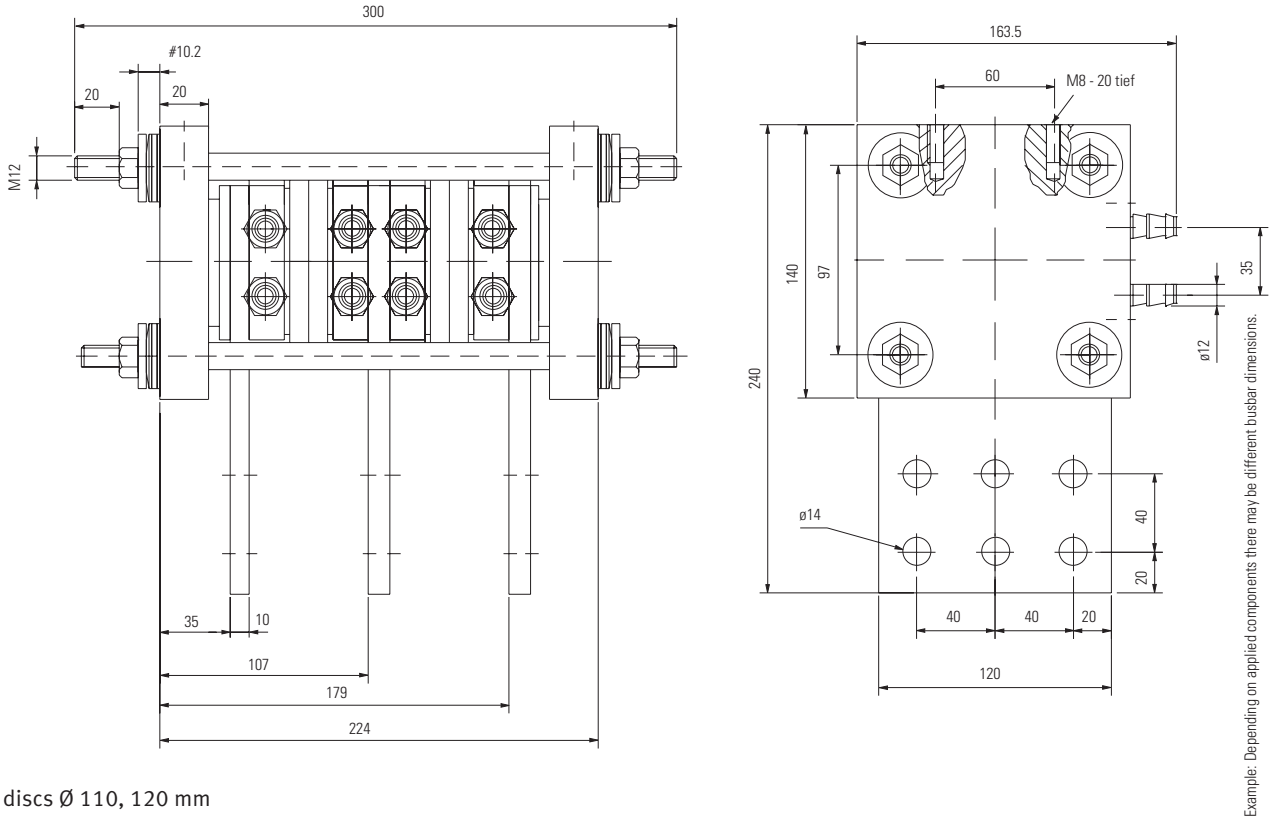

for discs Ø 110, 120 mm

K 63 V — G = 30 kg

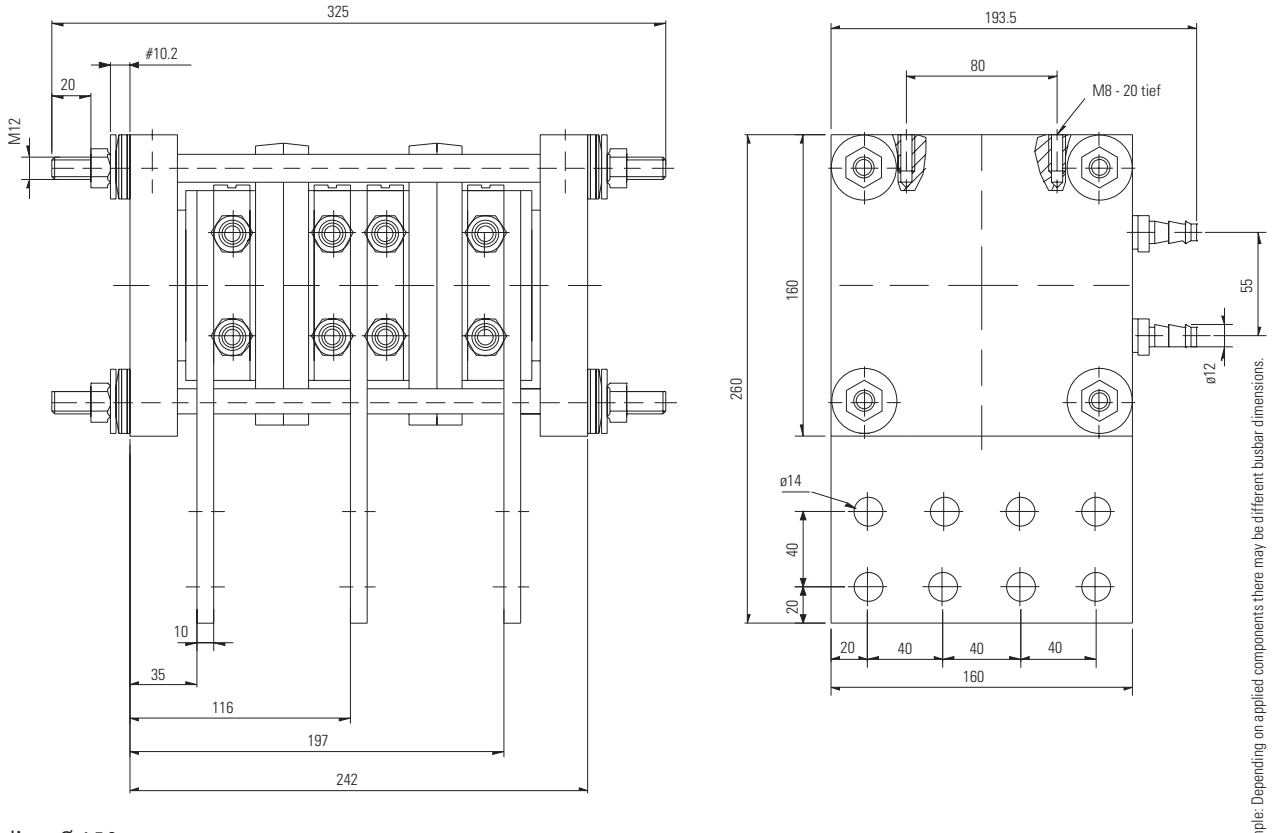

for discs Ø 150 mm

KW 50

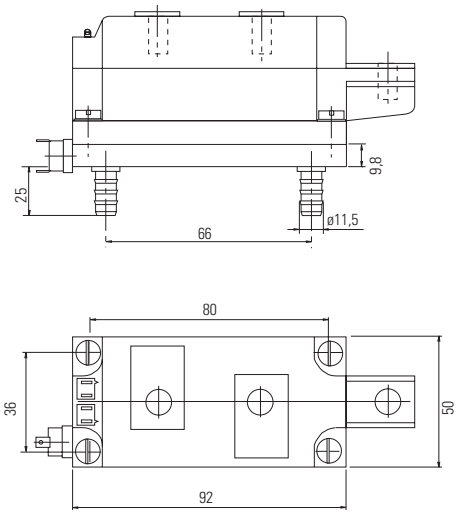

KW 60

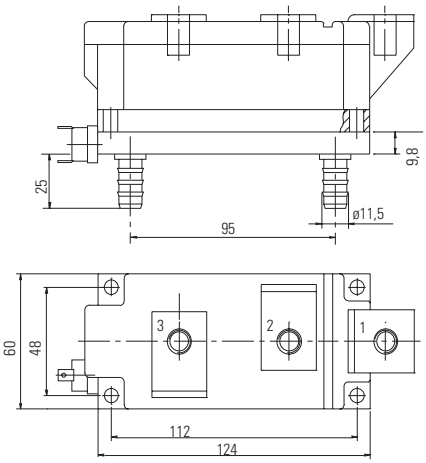

KW 70-T

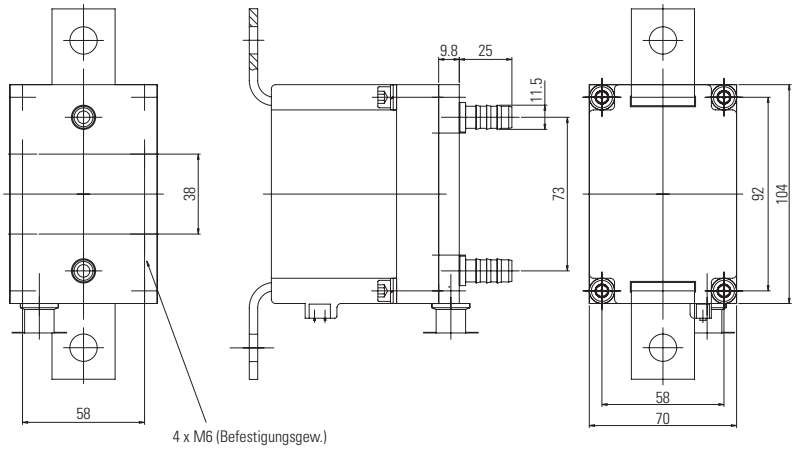

KW 30

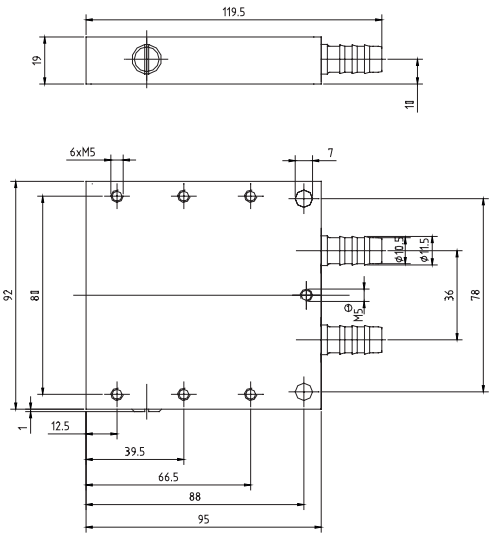

KW61

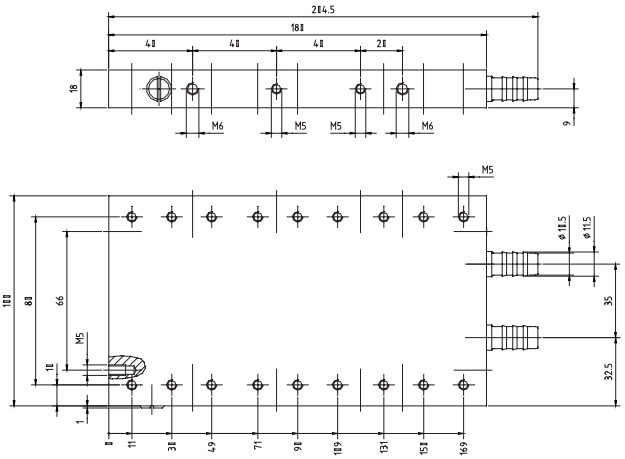

KW65

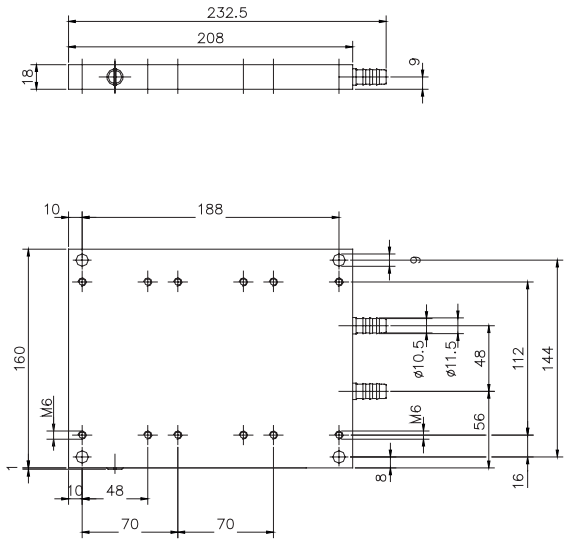

K 0.05 F/K 0.05.7 F — G = 9 kg

for discs Ø 50, 60, 57, 75 mm

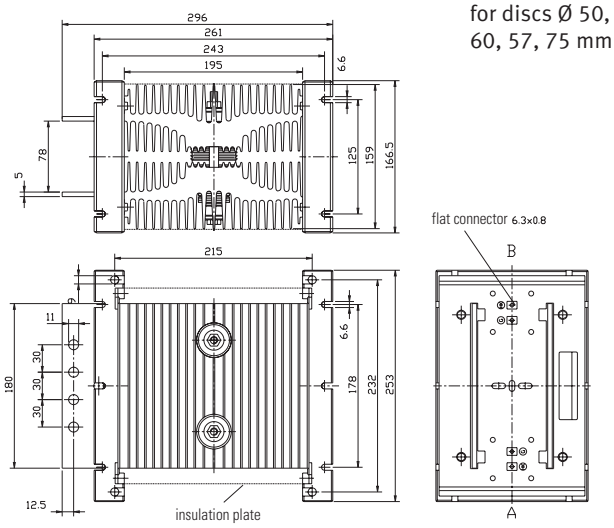

K 0.08 F/K 0.08.7 F — G = 9 kg

for discs Ø 50, 60, 57, 75 mm

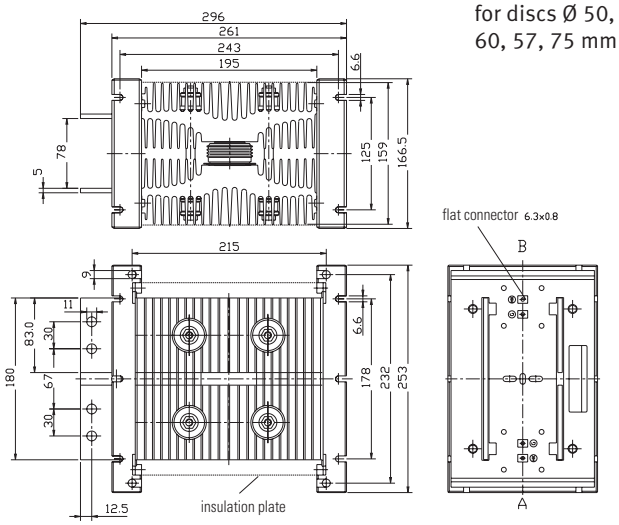

K 0.048 F — G = 9 kg

for discs Ø 100, 110 mm

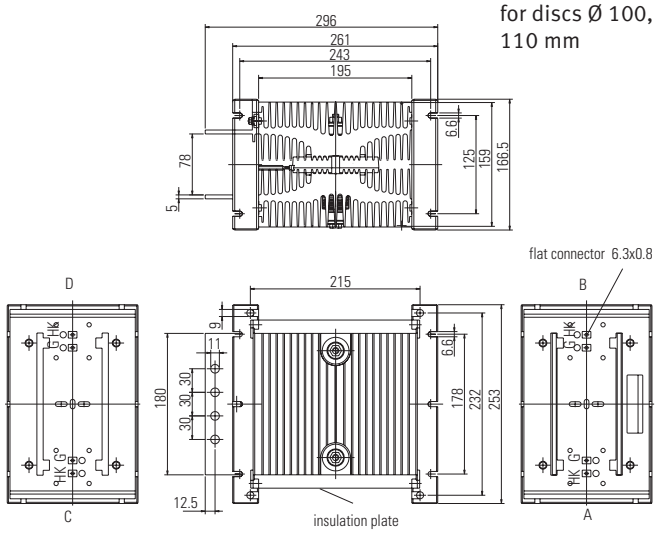

K 0.12 F — G = 2,5 kg

for discs Ø 41, 50, 60 mm

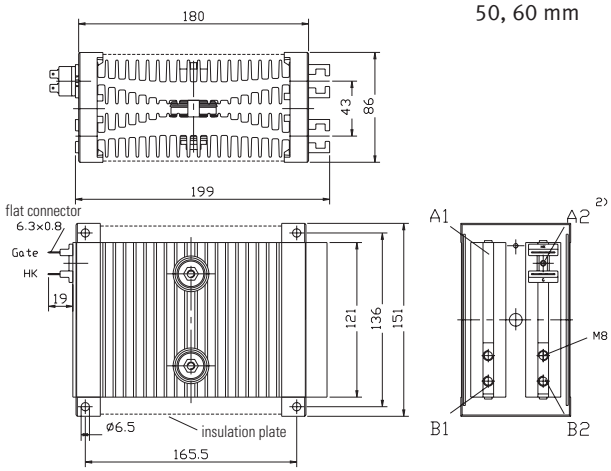

K 0.17 F — G = 2,5 kg

for discs with housing T41.14, D41.14, T50.14, D50.14, T60.14, D60.14

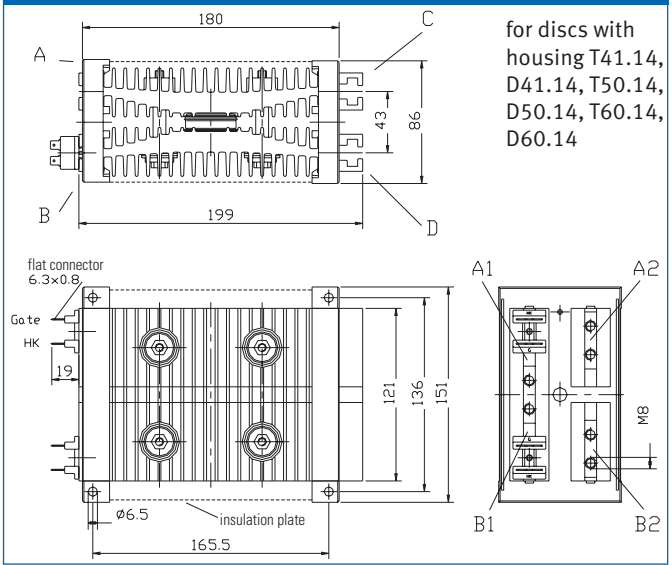

K 0.22 F — G = 3 kg

for discs Ø 41, 50, 60 mm

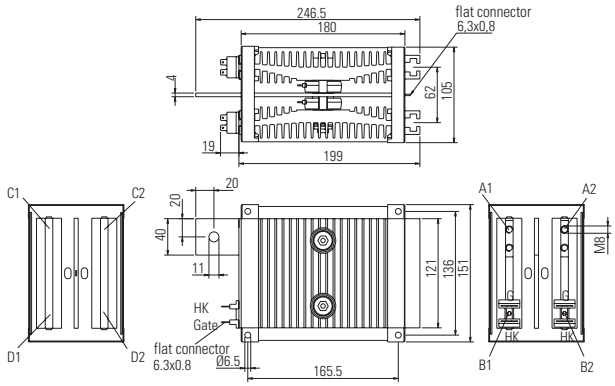

K 0.36 S — G = 2,9 kg

for discs with housing T41.14, D41.14, T50.14, D50.14, T60.14, D60.14

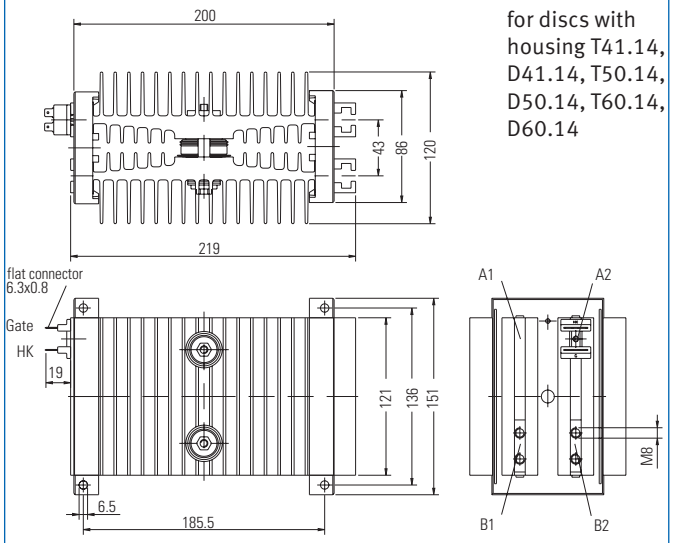

K 0.65 S — G = 3,3 kg

for discs with housing T41.14, D41.14, T50.14, D50.14, T60.14, D60.14

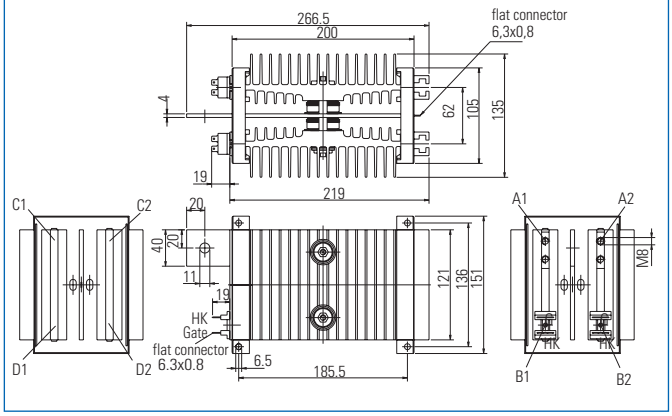

K 0.92S

for discs with housing T57.26, D57.26, T75.26, D75.26

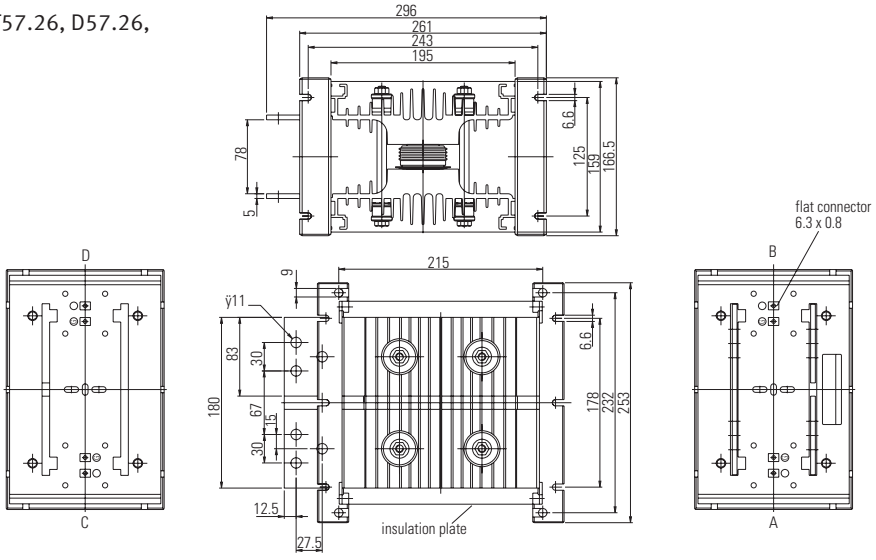

KE 01

G = 18,8 kg

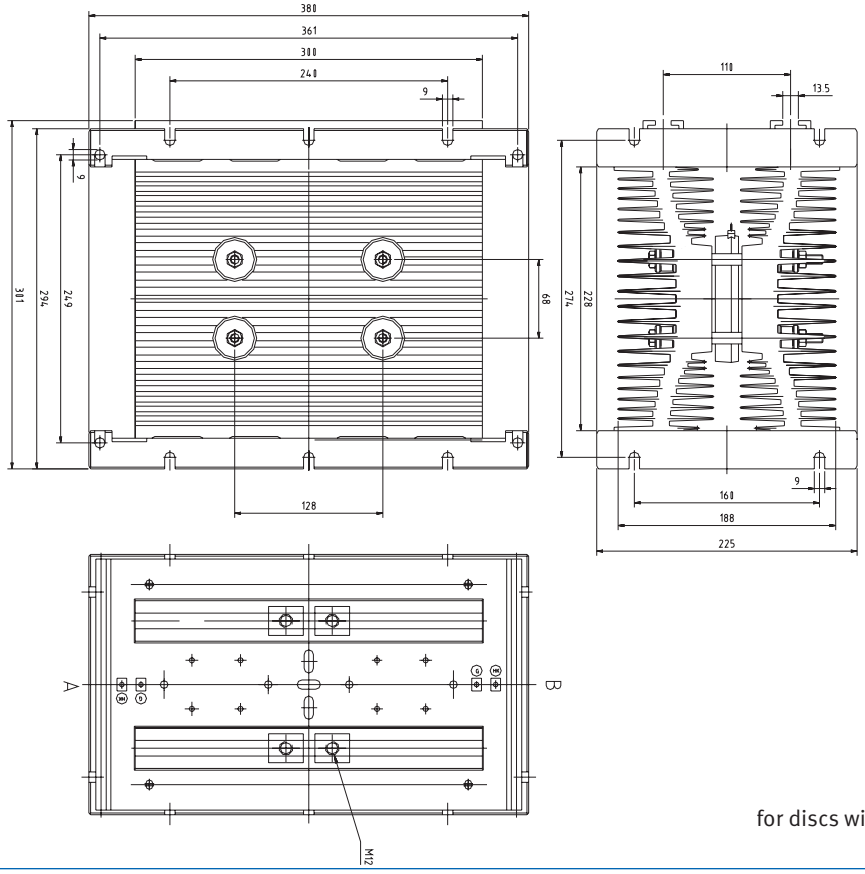

for discs with maximum Ø 150 mm

KE 02

G = 18,5 kg

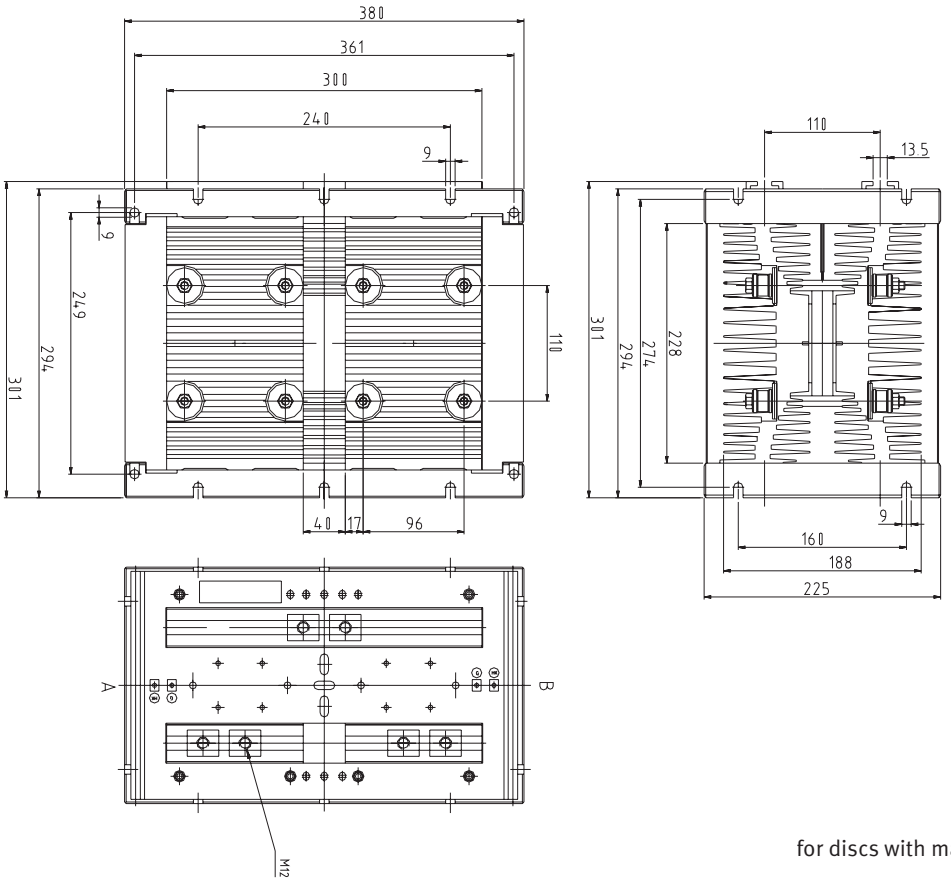

for discs with maximum Ø 120 mm