PRODUCT BRIEF

IM72D128VV01 - Vega

IP57 dust and water resistant digital PDM XENSIV™ MEMS Microphone

Product overview:

Key Parameters	Normal mode
Enviromental robustness	IP57
Sensitivity @ 1 kHz, 94 dBSPL	-36 ± 1 dBFS
Signal-to-noise ratio (SNR)	71.5 dB(A)
Current consumption	430 µA @ 3.072MHz
Acoustic overload point (1% / 10% THD)	125 dBSPL / 128 dBSPL
Low frequency roll-off (LFRO)	11 Hz
Supply voltage	1.62 to 3.60 V
Interface	Digital PDM
Port location	Bottom port
Package dimension	4.0 mm x 3.0 mm x 1.2 mm

Package information:

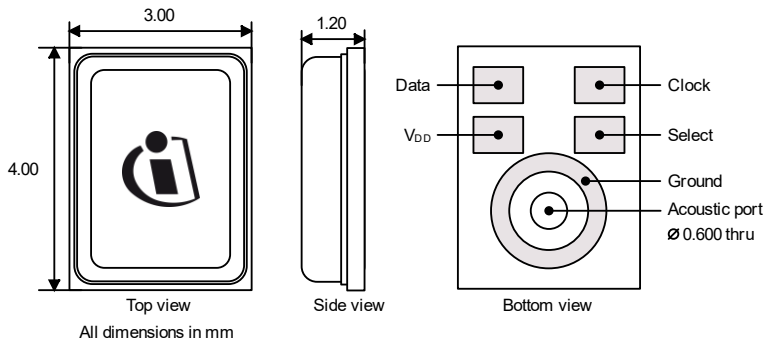

Key features

- 430 µA current consumption
- Component level IP57 water and dust resistance
- 71.5 dB(A) Signal-to-noise ratio
- Acoustic overload point (AOP) of 128 dBSPL
- Tight sensitivity (-36 ± 1 dB) tolerance
- 11 Hz low frequency roll-off
- Digital PDM output

Key benefits

- Far-field and low volume audio pick-up
- Clear audio signals even for highest sound pressure levels
- Highest precision of audio beams and algorithms

Typical Applications

- Voice User Interface (VUI): e.g. smart speakers, home automation, and IOT devices
- Active Noise Cancellation (ANC): headphones and earphones
- High quality audio capturing: e.g. cameras, laptops, tablets, and conference systems

www.infineon.com

Published by
Infineon Technologies AG
Am Campeon 1-15, 85579 Neubiberg
Germany

© 2024 Infineon Technologies AG
All rights reserved.

Public
Date: 06/2024

www.infineon.com/mems

Disclaimer!
This document is for information purposes only and any information given herein shall in no event be regarded as a warranty, guarantee or description of any functionality, conditions and/or quality of our products or any suitability for a particular purpose. With regard to the technical specifications of our products, we kindly ask you to refer to the relevant product data sheets provided by us. Our customers and their technical departments are required to evaluate the suitability of our products for the intended application.

We reserve the right to change this document and/or the information given herein at any time.