PRODUCT BRIEF

XENSIV™ – TLE49SRx angle sensor family

Outstanding stray field robustness, high accuracy with flexible package and interface options

The ongoing electrification of cars with internal combustion engines and the introduction of electric main drives for electric vehicles continuously increase the potential of electro-magnetic interference by stray fields which can cause issues for electronic sub systems.
Spatially separated Hall cells, which intrinsically enable a stray field robust measurement of a magnetic field, signal conditioning circuits and a digital signal processing unit are implemented into the sensor chip to provide angle information via a digital interface.
The members of the TLE49SRx family represent stray field robust angle sensors for applications such as chassis height, pedal position and steering angle sensors.
The sensor is developed according to ISO 26262 as safety element out of context fulfilling the ASIL C metric on component level.
Several TLE49SR sensor derivatives are available in leaded and surface mounted package options providing various communication interfaces. They are optimized for onboard PCB based and remote sensor designs:

- TLE49SRx3: Magnetic sensor with high stray field robustness for remote sensor design with communication interfaces PWM, SENT, PSI5 or SPC
- TLE49SRx8: Magnetic sensor with high stray field robustness for on PCB sensor design with communication interfaces PWM, SENT or SPC

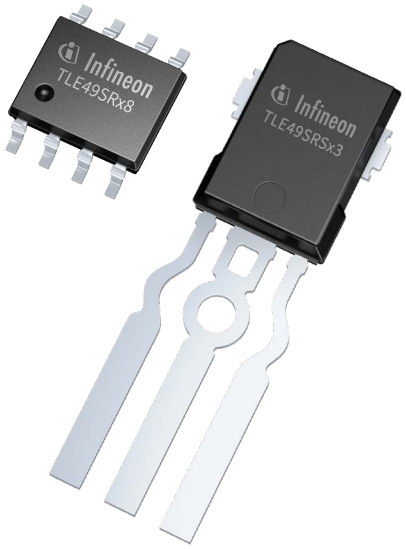

Key features

- Differential Hall based angle sensor with excellent stray field robustness
- High voltage and reverse polarity capability
- Full ISO 26262-compliant development, fulfilling ASIL C metric on device level
- 16-bit over 360° of absolute angle value
- Angle speed information
- Various communication interfaces available: PSI5 protocol V1.3 and V2.3, PWM, SENT and SPC Interface
- RoHS compliant and halogen free packages

Key benefits

- Look-up table for non-linear corrections ensuring accurate data conversion
- EEPROM for storage of configuration (e.g. zero angle) and customer specific ID
- Frame holder mechanism of SPC-interface enables synchronous data acquisition with other sensors
- Synchronization pulse, setting time stamp for all sensors on common PSI5-bus, enables synchronous data

www.infineon.com/angle-sensor

PRO SIL
ISO 26262 compliant

TLE49SRx block diagram

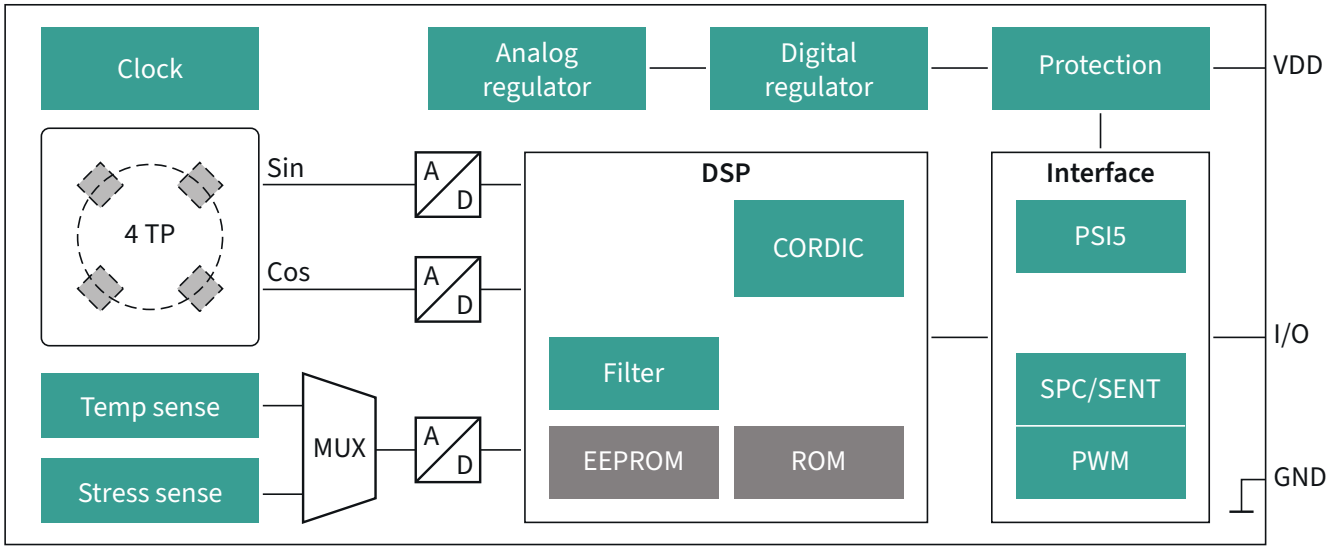

Product table

Product	Description	Safety	Classification	SP Number	Package
TLE49SRI3	Leaded 3 pin package, with 2 internal capacitors, PSI5 Interface	ASIL C	ISO 26262-compliant AEC-Q100	SP005398936	PG-SSO-3-41
TLE49SRC3	Leaded 3 pin package, with 3 internal capacitors, SPC Interface			SP005398941	PG-SSO-3-41
TLE49SRS3	Leaded 3 pin package, with 3 internal capacitors, SENT Interface			SP005398939	PG-SSO-3-41
TLE49SRP3	Leaded 3 pin package, with 3 internal capacitors, PWM Interface			SP005398937	PG-SSO-3-41
TLE49SRC8	SMD package, SPC Interface			SP005398933	PG-TDSO-8-1
TLE49SRS8	SMD package, SENT Interface			SP005398931	PG-TDSO-8-1
TLE49SRP8	SMD package, PWM Interface			SP005398929	PG-TDSO-8-1

Published by
Infineon Technologies AG
Am Campeon 1-15, 85579 Neubiberg
Germany

© 2024 Infineon Technologies AG.
All rights reserved.

Public

Date: 04/2024

Please note!
This Document is for information purposes only and any information given herein shall in no event be regarded as a warranty, guarantee or description of any functionality, conditions and/or quality of our products or any suitability for a particular purpose. With regard to the technical specifications of our products, we kindly ask you to refer to the relevant product data sheets provided by us. Our customers and their technical departments are required to evaluate the suitability of our products for the intended application.

We reserve the right to change this document and/or the information given herein at any time.

Additional information
For further information on technologies, our products, the application of our products, delivery terms and conditions and/or prices, please contact your nearest Infineon Technologies office (www.infineon.com).

Warnings
Due to technical requirements, our products may contain dangerous substances. For information on the types in question, please contact your nearest Infineon Technologies office.

Except as otherwise explicitly approved by us in a written document signed by authorized representatives of Infineon Technologies, our products may not be used in any life-endangering applications, including but not limited to medical, nuclear, military, life-critical or any other applications where a failure of the product or any consequences of the use thereof can result in personal injury.

Scan QR code and explore offering
www.infineon.com