PRODUCT BRIEF

XENSIV™ TLE4978 Hall current sensors

Simplify current sensing with integrated safety: ASIL B-classified, high bandwidth, high precision for high-frequency systems in automotive and industrial applications

Infineon's XENSIV™ TLE4978 family of highly precise coreless current sensors is designed with a hybrid Hall + coil architecture. These sensors deliver bi-directional AC/DC measurements with simultaneous over-current and zero-crossing detection (OCD & ZCD). Developed in accordance with ISO 26262 for safety requirements rated up to ASIL B, its high 9 MHz bandwidth offers exceptional accuracy across automotive, industrial, and telecom applications. This enables you to simplify system design and reduce component count. You can accelerate time-to-market with a single certified solution that ensures reliable power management and safety protection.

The XENSIV™ TLE4978 current sensor comes in a PG-DSO-16 300 mil, Grade 0 wide-body package to meet basic and reinforced isolation requirements. This pre-calibrated, highly accurate AC/DC current sensor features a high 9 MHz bandwidth with pre-programmed sensitivity. With exceptionally low noise (typ. 38 mA_{RMS}), minimal sensitivity error over temperature and lifetime (max. ±1.2%), and low offset error over temperature and lifetime (max. 200 mA), it sets a new standard in coreless current sensing technology.

The digital control and diagnostic interface (DCDI) provides users with the ability to fully customize sensor settings according to their specific requirements, for example:

- Multi-sensor communication (allows connection of up to 8 sensors per bus)
- Sensor diagnostics
- Adjustment of OCD thresholds (can be adjusted using an external resistive divider as well)
- OCD deglitch filter time

Potential applications

DC-DC converters, on-board charging, EV charging, PV inverters, battery charging & discharging, servo drives, SMPS, data centers

Key features

- High bandwidth of 9 MHz
- Current measurement from 22.5 A to 67.5 A
- Supply voltage: 3.3 V and 5 V
- Dedicated pin for OCD & ZCD
- Operating ambient temperature: -40°C to 150°C (Grade 0)
- ASIL B-classified
- DSO-16 300 mil package with basic and reinforced isolation

Key benefits

- High versatility for different power ranges, with OCD & ZCD programming capabilities
- High bandwidth, enabling use across a wide range of applications
- Highly precise measurement over temperature and lifetime
- Exceptional low current measurement capabilities, thanks to low noise performance
- Easy integration with pre-calibrated and pre-programmed sensitivity





www.infineon.com/current-sensors

Block diagram

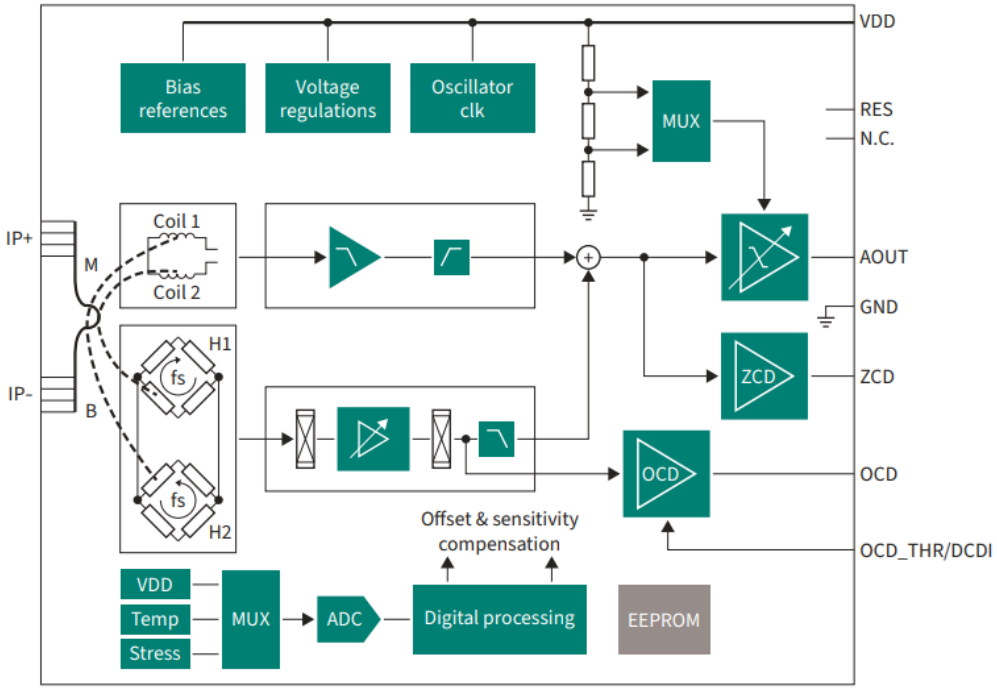

Product overview

Product	Supply [V]	Current range [Apeak]	Sensitivity [mV/A]	Output mode	Zero crossing - detection (ZCD)	Package
TLE4978-R060W5-O-S0010	5.0	67.5	32.5	Single-ended	OFF	PG-DSO-16
TLE4978-R050W5-O-S0010	5.0	56	39	Single-ended	OFF	PG-DSO-16
TLE4978-R040W5-O-S0010	5.0	45	48.75	Single-ended	OFF	PG-DSO-16
TLE4978-R060W3-O-S0010	3.3	67.5	20	Single-ended	OFF	PG-DSO-16
TLE4978-R040W3-O-S0010	3.3	45	30	Single-ended	OFF	PG-DSO-16
TLE4978-R020W3-O-S0010	3.3	22.5	60	Single-ended	OFF	PG-DSO-16
TLE4978-Z060W3-O-S0010	3.3	67.5	20	Single-ended	ON	PG-DSO-16

Published by
Infineon Technologies AG
Am Campeon 1-15, 85579 Neubiberg
Germany

© 2026 Infineon Technologies AG
All rights reserved.

Public

Date: 07/2026

Please note!
This Document is for information purposes only and any information given herein shall in no event be regarded as a warranty, guarantee or description of any functionality, conditions and/or quality of our products or any suitability for a particular purpose. With regard to the technical specifications of our products, we kindly ask you to refer to the relevant product data sheets provided by us. Our customers and their technical departments are required to evaluate the suitability of our products for the intended application.

We reserve the right to change this document and/or the information given herein at any time.

Additional information
For further information on technologies, our products, the application of our products, delivery terms and conditions and/or prices, please contact your nearest Infineon Technologies office (www.infineon.com).

Warnings
Due to technical requirements, our products may contain dangerous substances. For information on the types in question, please contact your nearest Infineon Technologies office.

Except as otherwise explicitly approved by us in a written document signed by authorized representatives of Infineon Technologies, our products may not be used in any life-endangering applications, including but not limited to medical, nuclear, military, life-critical or any other applications where a failure of the product or any consequences of the use thereof can result in personal injury.

Scan QR code and explore offering
www.infineon.com