PRODUCT BRIEF

KIT_PSC3M6_EVAL

PSOC™ Control C3M6 Evaluation Kit

The KIT_PSC3M6_EVAL Evaluation Kit is built to evaluate the features and capabilities of Infineon's PSOC™ Control PSC3M6 series MCU. The evaluation kit integrates multiple hardware and software components to enable users to access the MCU features.

The PSOC™ Control C3M6 Main Line MCU is a high-performance, low-power, 32-bit single-core Arm® Cortex® M33-based MCU running at up to 180 MHz with a digital signal processor (DSP), a floating-point unit (FPU), and state-of-the-art security. Typical applications include MHA and Aircon drives and compressors, SPMS, Solar, Robotics, Humanoids and Industrial Drives, enabling designers to innovate, solve complex design problems and speed up the design cycle, while keeping a lower BOM cost.

The PSOC™ Control C3M6 MCU includes the following features:

- Powerful core: 180 MHz Arm® Cortex®-M33 with DSP, FPU, and a hardware CORDIC engine
- Advanced safety and security: PSA Level 3 ready with TrustZone, PQC support, secure boot, and a hardware CRYPTO-accelerator
- Robust memory: Up to 512 KB flash and 128 KB SRAM, both featuring ECC for high reliability and a built-in bootloader for easy firmware updates
- Precision motor control: Dedicated Hall sensor and Quadrature Encoder Interfaces (QEI) with 24 TCPWM channels, featuring less than 100ps high-resolution PWM
- High performance analog: 12-bit 9-Msps SAR ADC with 16 S/H circuits, 4x signal amplifiers (OpAmps), and 9 fast comparators for real-time hardware protection
- Ultra-low power: Flexible operation (1.71 V – 3.63 V) with six power modes
- Versatile connectivity: 6x reconfigurable SCBs (UART/I2C/SPI), CAN FD (8 Mbps), I3C, and a native USB 2.0 Full-Speed host/device PHY
- Intelligent I/O: Up to 86 functional pins, including Smart I/O with 56 LUTs to perform Boolean logic tasks without taxing the CPU

PSOC™ Control is supported by ModusToolbox™, a unified ecosystem platform with tools and software solutions. ModusToolbox™ Motor Suite, and Power Suite are available to deliver a seamless graphical user interface that streamlines evaluation and training and provides real-time parameter monitoring for valuable insights into performance, efficiency, and reliability. Specialized application environments enable engineers to quickly identify issues, optimize designs, and enhance overall functionality.

For more Information visit: www.infineon.com/KIT_PSC3M6_EVAL

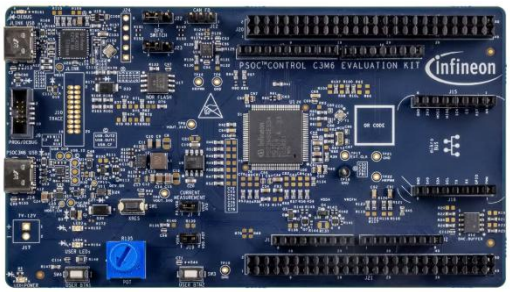

Kit Contents

- PSOC™ Control C3M6 Evaluation board
- USB-A to USB-C cable
- Ten jumper wires
- Quick start guide via QR code

Benefits

- USB Type-C connector
- CAN FD and I3C Interfaces
- USB2.0 Full-Speed USB device and host
- Two user LEDs
- Headers compatible with MIKROE's mikroBUS™ shields
- Headers compatible with Arduino UNO R3
- Two user buttons and a reset button for the PSC3M6 MCU
- Debug LED for XMC4200
- Potentiometer used to simulate analog sensor outputs
- Two (50-pin) expansion headers

Featured Components

- PSC3M6GES3AHQ1 (100-pin)
- TLE9251VLEXUMA1 (CAN FD)
- Onboard J-Link (XMC4200) programmer and debugger

Enablement

- Easy evaluation using ModusToolbox™ Motor and Power Suite libraries and code examples

PRODUCT BRIEF

Block diagram

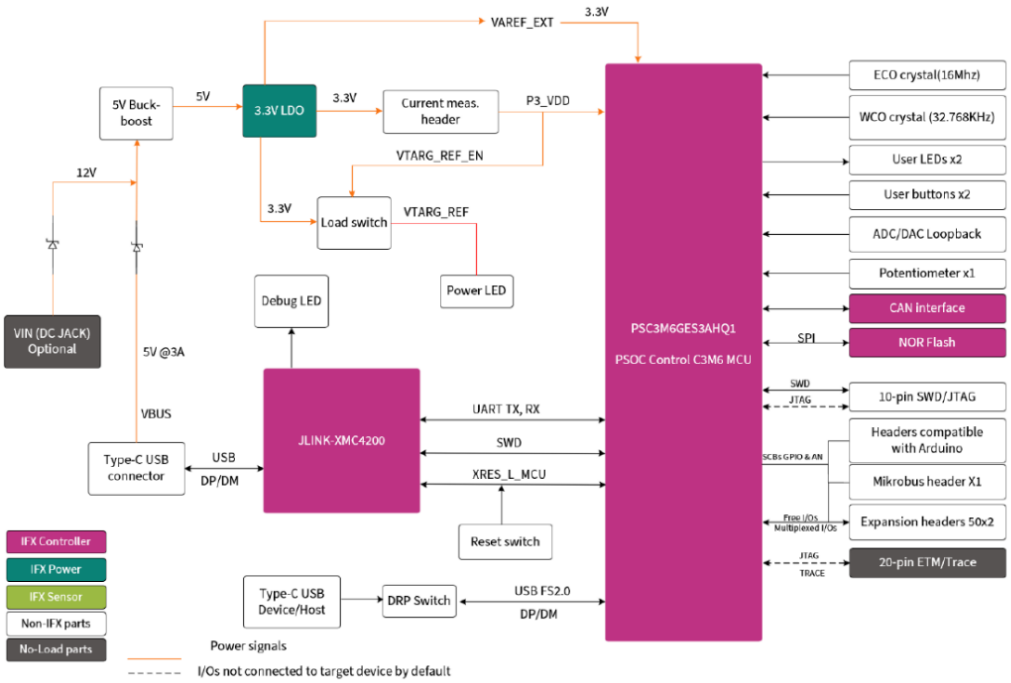

Part Numbers

PN	Kit	Function
KIT_PSC3M6_EVAL	PSOC™ Control C3M6 Evaluation Kit	PSOC™ Control C3M6 device functional evaluation

Key Applications

Motor Control	HVAC and home appliances, industrial drives, robots, humanoids, drones and LEVs
Power Conversion	SMPS, EV Charging, solar
Other markets	Datacenter UBM, PCIe, e-cigarette, smart inhaler, healthcare tools, drills, etc.

Published by
Infineon Technologies AG
Am Campeon 1-15, 85579 Neubiberg
Germany

© 2026 Infineon Technologies AG
All rights reserved.

Public

Version: V1.0_EN
Date: 10/2026

Scan QR code and explore offering
www.infineon.com

Please note!
This Document is for information purposes only and any information given herein shall in no event be regarded as a warranty, guarantee or description of any functionality, conditions and/or quality of our products or any suitability for a particular purpose. With regard to the technical specifications of our products, we kindly ask you to refer to the relevant product data sheets provided by us. Our customers and their technical departments are required to evaluate the suitability of our products for the intended application.

We reserve the right to change this document and/or the information given herein at any time.

Additional information
For further information on technologies, our products, the application of our products, delivery terms and conditions and/or prices, please contact your nearest Infineon Technologies office (www.infineon.com).

Warnings
Due to technical requirements, our products may contain dangerous substances. For information on the types in question, please contact your nearest Infineon Technologies office.

Except as otherwise explicitly approved by us in a written document signed by authorized representatives of Infineon Technologies, our products may not be used in any life-endangering applications, including but not limited to medical, nuclear, military, life-critical or any other applications where a failure of the product or any consequences of the use thereof can result in personal injury.