PRODUCT BRIEF

KIT_PSC1M3_EVK

PSOC™ Control C1 Evaluation Kit

The PSOC™ Control C1 Evaluation Kit KIT_PSC1M3_EVK is built to evaluate the features and capabilities of Infineon's PSOC™ Control PSC1M3 MCU, including its tool chain. This evaluation kit focusses on the generic features' evaluation under safe operating conditions of the PSC1M3 device.

The PSOC™ Control C1 microcontrollers (MCUs) are developed for motor control and industrial applications. This C1 Entry Line features an Arm® Cortex®-M0 MCU with a CORDIC MATH Coprocessor. Typical applications include Home and Professional Appliances, Professional Tools, Transportation, General Purpose, and Lighting; enabling designers to innovate, cost effectively solve design problems and speed up system design cycles.

The KIT_PSC1M3_EVK board is equipped with the following features:

- PSC1M3FBLGQ0AT (Arm® Cortex®-M0 based) microcontroller, PG-VQFN-48
- Connection to application cards via card edge connector
- Detachable J-Link debugger and UART virtual COM port, with USB-C
- Four user LEDs
- Potentiometer, connected to analog input
- Power supply via USB-C connector
- Option to use a 20-MHz external crystal for CAN communication
- Option to use a 32.768-kHz external crystal as standby clock

PSOC™ Control is supported by ModusToolbox™, a unified ecosystem platform with tools and software solutions. ModusToolbox™ Motor Suite is available for developers of PSOC™ Control motor focused applications. It provides a seamless graphical user interface that streamlines evaluation and training and provides real-time parameter monitoring for valuable insights into performance, efficiency, and reliability. Specialized application environments enable engineers to quickly identify issues, optimize designs, and enhance overall functionality.

For more Information visit: www.infineon.com/KIT-PSC1M3-EVK

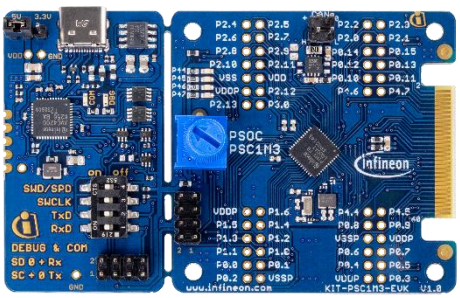

Kit Contents

- PSOC™ Control C1 Evaluation board
- USB-A to USB-C cable
- Quick start guide via QR code

Benefits

EVK features

- 3.3V or 5V selectable MCU voltage
- 20MHz crystal on-board
- 32.768kHz RTC crystal on-board
- Compatible to various XMC1000 Application Kits

Nominal Operation Specification

- USB 2.0 with 1500mA supports components on board
- Typical 5V @0.5A, USB-C
- Power over expansion header for Motor control lite kit (KIT_XMC1X_AK_ MOTOR_001)

Featured Components

- PSC1M3FBLGQ0AT (48-pin)
- XMC4200 J-Link debugger
- TLE9250XLE (CAN FD)

Enablement

- Easy evaluation using ModusToolbox™ Motor Suite library and code examples

PRODUCT BRIEF

Block diagram

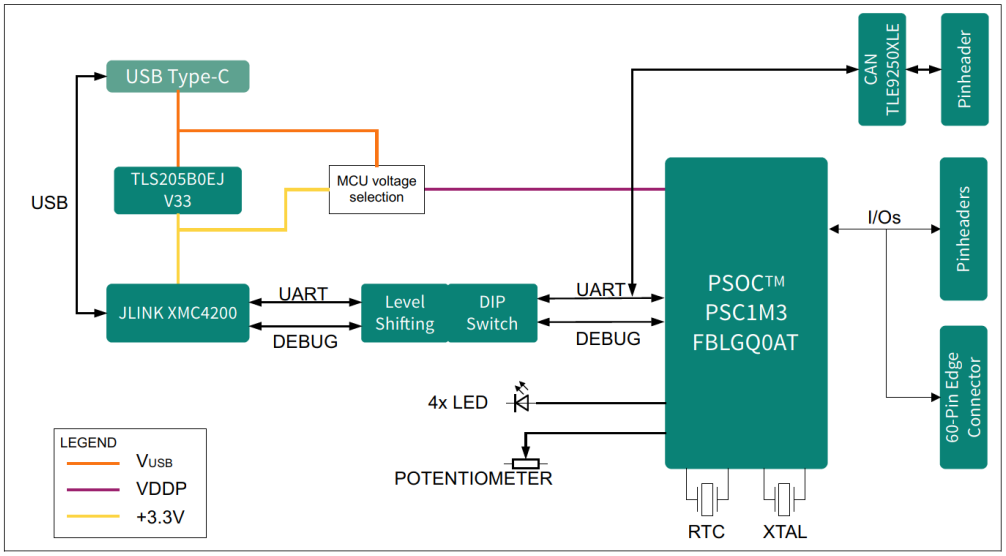

Part Numbers

PN	Kit	Function
KIT-PSC1M3-EVK	PSOC™ Control C1 Evaluation Kit	PSOC™ Control C1 device functional evaluation

Key Applications

Home and Professional Appliances	IP protection, fast ramp-up, form factor, size and weight
Professional Tools	Motor control, reliability, sensored or sensorless operation, customizable
Transportation	Robustness, functional safety, lifetime, reliability and quality
General Purpose	Sensors, battery monitoring, cost effectiveness, functional safety
Lighting	Energy efficiency, ease of use, remote monitoring, form factors

Published by
Infineon Technologies AG
Am Campeon 1-15, 85579 Neubiberg
Germany

© 2026 Infineon Technologies AG
All rights reserved.

Public

Version: V1.0_EN
Date: 07/2026

Please note!
This Document is for information purposes only and any information given herein shall in no event be regarded as a warranty, guarantee or description of any functionality, conditions and/or quality of our products or any suitability for a particular purpose. With regard to the technical specifications of our products, we kindly ask you to refer to the relevant product data sheets provided by us. Our customers and their technical departments are required to evaluate the suitability of our products for the intended application.

We reserve the right to change this document and/or the information given herein at any time.

Additional information
For further information on technologies, our products, the application of our products, delivery terms and conditions and/or prices, please contact your nearest Infineon Technologies office (www.infineon.com).

Warnings
Due to technical requirements, our products may contain dangerous substances. For information on the types in question, please contact your nearest Infineon Technologies office.

Except as otherwise explicitly approved by us in a written document signed by authorized representatives of Infineon Technologies, our products may not be used in any life-endangering applications, including but not limited to medical, nuclear, military, life-critical or any other applications where a failure of the product or any consequences of the use thereof can result in personal injury.

Scan QR code and explore offering
www.infineon.com