Product brief

XENSIV™ Wireless Presence Detection Sensor Demo, 60 GHz Radar

The XENSIV™ Wireless Presence Detection Sensor Demo kit, Demo_ 60LTR11_motion, consists of a small coin cell-powered device with an Infineon AIROC Bluetooth PSoC, BGT60LTR11AIP, and downloadable phone app for Android or iOS mobile handsets.

Infineon's BGT60LTR11AIP radar IC can detect basic motion and direction of motion without the need for sophisticated algorithms. The BGT60LTR11AIP is configured to operate in autonomous mode with no need for the external microcontroller to process radar data. Logic level outputs from the BGT60LTR11AIP indicate motion present in the field of view, as well as direction of motion (i.e. towards or away from the sensor) and is communicated to the phone app by the AIROC Bluetooth PSoC by BLE wireless connection.

Key features

- Simple to set up to demonstrate basic radar motion detection
- Wireless BLE connection to mobile phones
- App available on Google Play App Store and Apple Store
- Powered by CR2032 coin cell battery
- Open source schematics, BOM, Gerbers, & firmware

Block Diagram

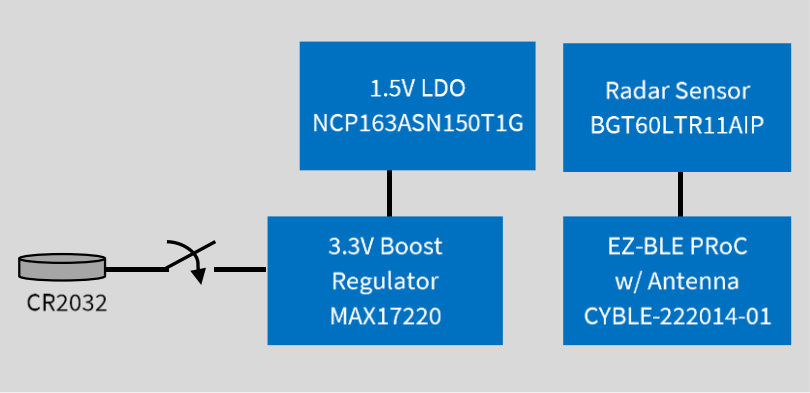



XENSIV™ Wireless Presence Detection Sensor Demo, 60 GHz Radar

Demo Specifications

- Power consumption: 30 mW (estimated)
- Radar detection range: up to 8.5 m for human target
- BLE range: up to 30 m
- Radar FOV: +80 deg HPBW
- Small form factor: 33.5mm^2

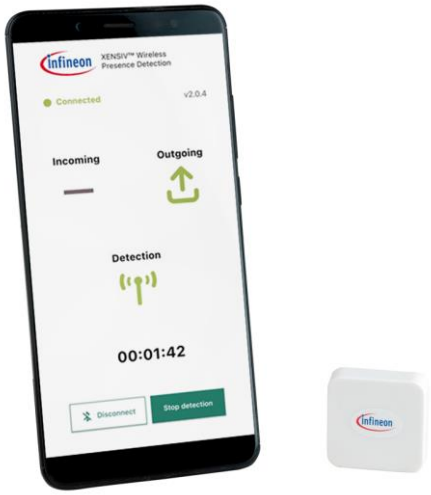

For ordering information, please visit https://www.infineon.com/cms/en/product/evaluation-boards/demo_60ltr11_motion/ or contact your Infineon sales rep or distributor.

For more information on the BGT60LTR11AIP, visit www.infineon.com/60GHz

www.infineon.com

Published by
Infineon Technologies AG
Am Campeon 1-15, 85579 Neubiberg
Germany

© 2022 Infineon Technologies AG.
All rights reserved.

Document number: B000-I0000-V1-X-7600-EU-EC
Date: MM / 2022

Please note!
This Document is for information purposes only and any information given herein shall in no event be regarded as a warranty, guarantee or description of any functionality, conditions and/or quality of our products or any suitability for a particular purpose. With regard to the technical specifications of our products, we kindly ask you to refer to the relevant product data sheets provided by us. Our customers and their technical departments are required to evaluate the suitability of our products for the intended application.

We reserve the right to change this document and/or the information given herein at any time.

Additional information
For further information on technologies, our products, the application of our products, delivery terms and conditions and/or prices please contact your nearest Infineon Technologies office (www.infineon.com).

Warnings
Due to technical requirements, our products may contain dangerous substances. For information on the types in question, please contact your nearest Infineon Technologies office.

Except as otherwise explicitly approved by us in a written document signed by authorized representatives of Infineon Technologies, our products may not be used in any life-endangering applications, including but not limited to medical, nuclear, military, life-critical or any other applications where a failure of the product or any consequences of the use thereof can result in personal injury.