PRODUCT BRIEF

EZ-PD™ PMG1-S4

Single-port bi-directional source/sink USB-C PD MCU

EZ-PD™ PMG1-S4 USB Type-C power delivery MCU, targets higher power embedded systems requiring USB power delivery extended power range (EPR) up to 28 V and 5 A. The part has a bi-directional NFET gate driver to control the USB-C PD port as a power source or sink using the same power path. The part also integrated a dead battery Rd, high voltage LDO, and 12-bit ADC for battery applications.

EZ-PD™ PMG1-S4 enables the implementation of USB-C by replacing the main microcontroller and targets chargers that power from a high-voltage USB-C PD port and want to use an MCU to provide additional control capability. Applications include battery-powered appliances like power and garden tools, smart speakers, power banks, and vacuum cleaners.

EZ-PD™ PMG1-S4 supports a wide input and output voltage range (4V to 28 V). It is a programmable USB PD solution with an on-chip 32-bit Arm® Cortex®-M0 + processor, 2x64 KB flash, and 12 KB SRAM. It also includes various analog and digital peripherals such as ADC, PWMs, serial communication blocks (UART/I2C/SPI), and timers. The MCU is available in a compact 32-QFN package (5 mm × 5 mm) with a pitch of 0.50 mm, enabling designs with reduced sizes. Being suited for an industrial temperature range of -40°C to 85°C with a maximum operating junction temperature of 125°C, EZ-PD™ PMG1-S4 ensures a robust and reliable design.

To support the development of applications implementing the MCU, Infineon provides developers with the ModusToolbox™ firmware development environment. Together with the appropriate board support package (BSP) and the EZ-PD™ PMG1 software development kit (SDK), it eliminates the need for an expert-level understanding of the intricacies of the device resources.

Key features

- Supports USB-C PD 3.2 spec up to 140 W
- USB-C PD DRP or sink
- 1.5 W VCONN
- Fully programmable ARM® Cortex® M0+, 2x64 KB flash, 12 KB SRAM
- Bi-directional NFET gate driver
- 1x12-Bit ADC and 1x8-Bit ADC
- High voltage LDO
- 2x SCBs and 3x TCPWMs
- Low side current sense amplifier
- High voltage protection circuits
- Highly configurable value-added features
- SDK on ModusToolbox™ and EZ-PD™ PMG1 evaluation boards

Key benefits

- Reduced BOM and board area
- Simplified development with multiple applications supported in the SDK
- Highly programmable solution
- Simplified customization with proprietary software suite
- Fully interoperable USB-C PD stack
- Hardware protection

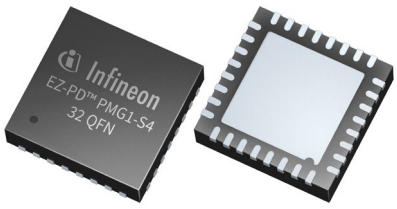



www.infineon.com/PMG1-S4

Block diagram

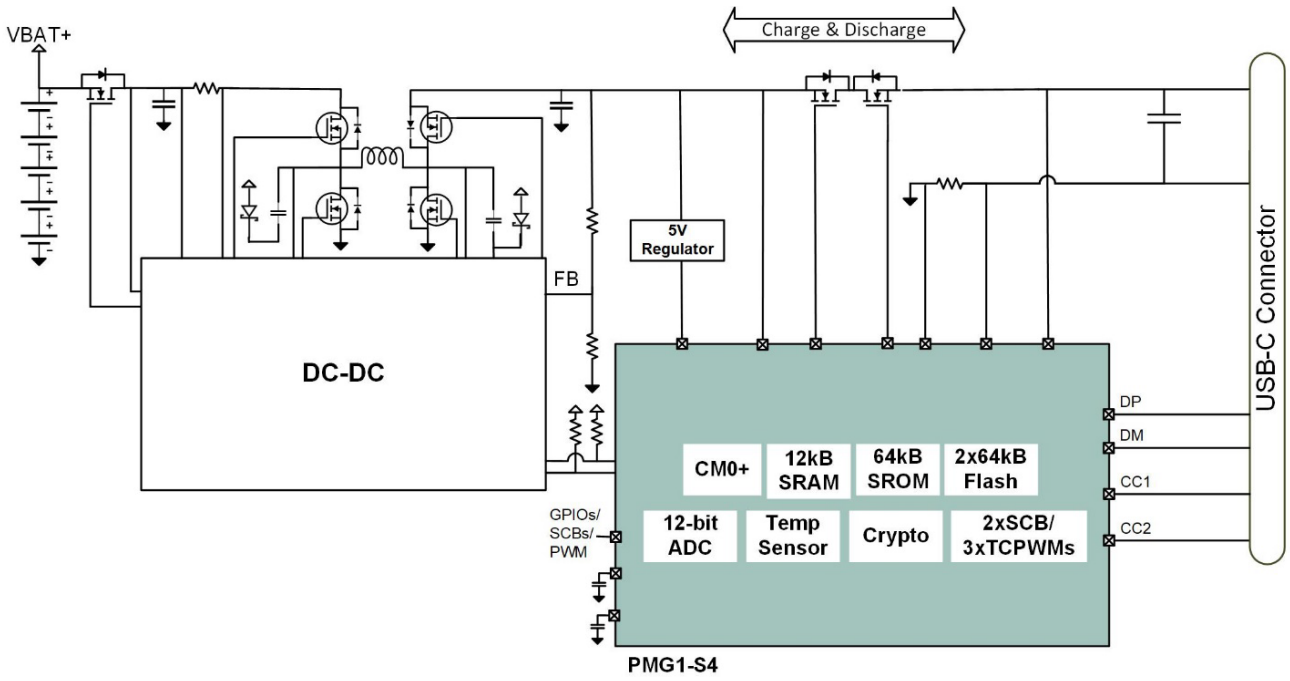

Published by
Infineon Technologies AG
Am Campeon 1-15, 85579 Neubiberg
Germany

© 2025 Infineon Technologies AG
All rights reserved.

Public

Date: 08/2026

www.infineon.com

Please note!
This Document is for information purposes only and any information given herein shall in no event be regarded as a warranty, guarantee or description of any functionality, conditions and/or quality of our products or any suitability for a particular purpose. With regard to the technical specifications of our products, we kindly ask you to refer to the relevant product data sheets provided by us. Our customers and their technical departments are required to evaluate the suitability of our products for the intended application.

We reserve the right to change this document and/or the information given herein at any time.

Additional information
For further information on technologies, our products, the application of our products, delivery terms and conditions and/or prices, please contact your nearest Infineon Technologies office (www.infineon.com).

Warnings
Due to technical requirements, our products may contain dangerous substances. For information on the types in question, please contact your nearest Infineon Technologies office.

Except as otherwise explicitly approved by us in a written document signed by authorized representatives of Infineon Technologies, our products may not be used in any life-endangering applications, including but not limited to medical, nuclear, military, life-critical or any other applications where a failure of the product or any consequences of the use thereof can result in personal injury.