PRODUCT BRIEF

XENSIV™ KP276x

Infineon's integrated pressure sensor IC for manifold air pressure (MAP) measurement applications

The Manifold Air Pressure (MAP) is an important parameter for calculating the air-fuel ratio supplied to the engine, enabling better combustion, higher efficiency, and reduced emissions.

With an improved accuracy of 0.77% Full Scale Span (FSS), the KP276x is the most accurate digital Turbo MAP sensor, enabling customers to meet the targets of new CO_2 legislative requirements. Protected against aggressive media like Iodine, the KP276x guarantees high quality and a long lifetime, even in harsh operating conditions. The improved SENT interface ensures easy use and fast communication, while the integrated NTC functionality allows the pressure sensor to act as a hub for an external NTC temperature sensor. This innovative design enables pressure and temperature signals to be transmitted through a single digital interface, simplifying system integration. The KP276x MAP sensor family is the optimum solution for turbocharged diesel and gasoline engine management systems.

Infineon provides a comprehensive portfolio of products for diesel engine management systems, ranging from micro-machined sensors to smart power ICs and microcontrollers. The KP276x pressure sensor, as an integrated solution for manifold pressure measurement, stands out as a benchmark for reliability, performance, and integration.

Application circuit for the pressure sensor system

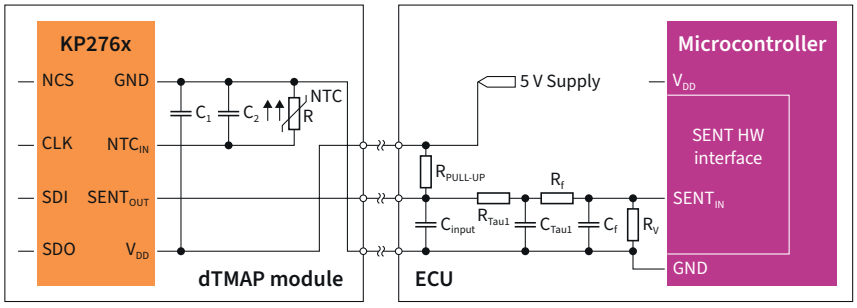



Key features

- **Increased media robustness** for current automotive requirements
- **High pressure accuracy** over lifetime sensing up to ±0.77% Full Scale Span (FSS)
- Integrated signal processing for external temperature sensor
- Improved **SENT** protocol interface (282 clock ticks)
- Real **12-bit** pressure resolution
- Real **12-bit** temperature resolution
- **Self-diagnostic** features
- "Green" 8 pin SMD housing
- Automotive qualified, AEC-Q100
- Improved NTC start-up time (typ. 10 ms)

Key applications

- Automotive applications
  - **MAP/TMAP** (Manifold Air Pressure)
  - **EGR** (Exhaust Gas Recirculation)
  - **ORVR** (Onboard Refueling Vapor Recovery)
  - **NGV** (Natural Gas Vehicle)
  - **DPF** (Diesel Particulate Filter)
  - **GPF** (Gasoline Particulate Filter)
- Industrial control
- Consumer applications
- Medical applications

www.infineon.com/bap-map-pressure

MAP RoHS Hal AEC Qualified

Highly integrated sensors – single chip

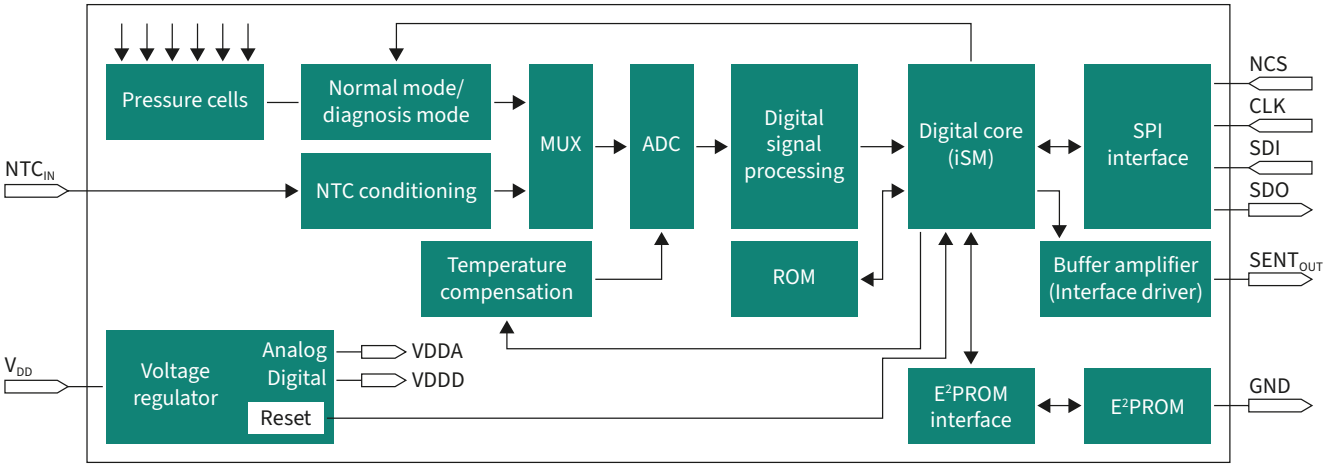

Product summary

Parameter	Range			Unit
	min.	typ.	max.	
Accuracy			0.77	% F.S.
Pressure range	10		400	kPa
Supply voltage	4.5	5.0	5.5	V
Output current			10	mA
Output	1		4087	LSB
Operating temperature	-40		+150, 170 peak	°C
Programmable transfer functions				
Transfer function pressure	10		400	kPa
Transfer function pressure output	193		3896	LSB
Transfer function temperature	-50		+170	°C
Transfer function temperature output	185		1945	LSB
Clamping level	0		4088	LSB

Published by
Infineon Technologies AG
Am Campeon 1-15, 85579 Neubiberg
Germany

© 2025 Infineon Technologies AG.
All rights reserved.

Public

Date: 12/2025

Important notice
Products are sold or provided and delivered by Infineon Technologies AG and its affiliates ("Infineon") subject to the terms and conditions of the frame supply contract or other written agreement(s) executed by a customer and Infineon or, in the absence of the foregoing, the applicable Sales Conditions of Infineon. General terms and conditions of a customer or deviations from applicable Sales Conditions of Infineon shall only be binding for Infineon if and to the extent Infineon has given its express written consent.

To the fullest extent permissible pursuant to applicable law, with respect to any information given in this document or in any associated documentation, Infineon disclaims all warranties and liabilities of any kind, whether express or implied, including but not limited to any warranties of merchantability, suitability of the products for the intended application or the specific use, or non-infringement of third-party rights.

Subject to the development and release of the products for series supply by Infineon, the technical specifications of the products are set forth in the relevant final datasheet provided by Infineon and, if any, agreed and signed specifications. Infineon's customers are required to evaluate the suitability of the products for the intended application or specific use.

The information given in this document is subject to change by Infineon at any time without notice.

Scan QR code and explore offering
www.infineon.com